savaria

Eclipse

RESIDENTIAL ELEVATOR with Micro-6 Controller & Speed Arrestor

(August 2020 to Current)

INSTALLATION GUIDE

Part No. 001276, rev. 017
10-m12-2024

Standard notations

The following notations may be used throughout this guide to emphasize important safety information, mechanical concerns, and other important information. Please review and follow all of these messages.

DANGER	Danger messages indicate an imminently hazardous situation, which, if not avoided, results in death or serious injury. All danger messages feature a standard ISO safety alert symbol followed by the signal word *Danger* in capitalized black lettering on a red background.
WARNING	Warning messages indicate a potentially hazardous situation, which, if not avoided, could result in death or serious injury. All warning messages feature a standard ISO safety alert symbol followed by the signal word Warning in capitalized black lettering on a dark yellow background.
CAUTION	Caution messages indicate a potentially hazardous situation, which, if not avoided, could result in death or serious injury. All caution messages feature a standard ISO safety alert symbol followed by the signal word Caution in capitalized black lettering on a yellow background.
CAUTION	Caution messages that do not include the ISO safety alert symbol indicate a potentially hazardous situation for the machine only, which, if not avoided, could result in damage to the machine. These caution messages include the signal word Caution in capitalized black lettering on a yellow background.
NOTE	Note messages provide information, such as reminders, general information about a previous statement, or additional guidelines that do not fit into the flow of the preceding text. All note messages include the signal word Note in capitalized white lettering on a blue background.

Hazards and cautions

ELECTRICAL SHOCK HAZARD

Do not connect or disconnect wiring while the power is on. Before servicing, disconnect all power to the equipment. The internal capacitor remains charged even after the power supply is turned off. The Charge indicator LED extinguishes when the DC bus voltage is below 50 V DC. To prevent electric shock, wait at least five minutes after all indicators are OFF and measure the DC bus voltage level to confirm safe level.

WARNING

SUDDEN MOVEMENT HAZARD

The system may start unexpectedly upon application of power. Clear all personnel from the drive, motor, and machine area before applying power. Secure covers, couplings, shaft keys, and machine loads before applying power to the drive. Unpredictable equipment operation may result in death or serious injury.

ELECTRICAL SHOCK HAZARD

Do not attempt to modify or alter the variable frequency drive in any way not explained in the drive unit manual. Failure to comply could result in death or serious injury. Savaria is not responsible for any modifications of the product made by the user. Do not allow unqualified personnel to use equipment. Failure to comply could result in death or serious injury. Maintenance, inspection, and replacement of parts must be performed only by authorized personnel familiar with installation, adjustment, and maintenance. Do not remove covers or touch circuit boards while the power is on.

WARNING

FIRE HAZARD

Do not use an improper voltage source. Verify that the rated voltage matches the voltage of the incoming power supply before applying power.

WARNING

CRUSH HAZARD

Never connect or disconnect the motor from the controller while the controller is outputting voltage. Improper equipment sequencing could result in damage to the controller or personal injury.

WARNING

Make sure the building ground is connected to the controller ground bus before turning the disconnect on. Improper or no ground can result in shocking hazard and unsafe operation.

DANGER

HAZARD WARNING

Be aware that during the installation, service and maintenance of this equipment, you could or will be exposed to unsafe crushing, shearing and falling hazards.



Disclaimer

Savaria Concord Lifts, Inc. disclaims liability for any personal injury or property damage resulting from the operation of a product that has been modified from the original Savaria design. No person or company is authorized to change the design of this product without written authorization by Savaria.

Revision history of this guide

- August 19, 2020 – Initial release
- September 3, 2020 - Revised STEP 24 on page 54
- January 25, 2021 - Revised site specifics on page 4, replaced figure 132 with latest revision drawing on page 85
- May 17, 2021 - Updated figure 78 on page 50
- June 28, 2021 - Removed Pages 38 and 39
- July 23, 2021 - Added "Install Reset Switch"
- September 01, 2021 - Removed 3" & 5" rule
- August 25, 2022 - Added Skate Adjustment to page 35-36
- September 27, 2022 - Added note on page 50 and Appendix G on page 127
- November 01, 2022 - Added inspection note to pages 50, 108 and Appendix G
- February 27, 2023 - Updated any mention of OSG to Speed Arrestor
- April 13, 2023 - Revised step 21 on page 48, revised Appendix G on page 129.
- November 20, 2023 - Revised Step 1 page 6
- March 1, 2024 - Revised page 76, Added Appendix H
- March 13, 2024 - Revised parts number 227238 to 227289 on page 14 and 22
- July 18, 2024 - Added note onto page 13
- November 27, 2024 - Updated Floor Programming procedure on page 107
- December 10, 2024 - Updated page 47

IMPORTANT

APPLICABLE CODES

You must ensure that your installation conforms to all local codes and standards including the applicable electrical, building, and elevator/lift codes.

Each region will use a specific year of the code and it is the responsibility of the installing company to confirm which year of the code is applicable.

For the ECLIPSE, the following elevator/lift codes apply:

- ASME A17.1-1996, Part 5
- ASME A17.1/CSA B44-2000, Section 5.3
- ASME A17.1/CSA B44-2004, Section 5.3
- ASME A17.1-2004, Addendum 2005, Section 5.3
- ASME A17.1/CSA B44-2007, Section 5.3
- ASME A17.1/CSA B44, Addendum 2008, Section 5.3
- ASME A17.1/CSA B44-2010, Section 5.3
- ASME A17.1/CSA B44-2013, Section 5.3
- ASME A17.1/CSA B44-2016, Section 5.3
- ASME A17.1/CSA B44-2019, Section 5.3

Job site tools

- Allen wrenches
- Socket and wrench set
- Screwdrivers (slotted and phillips)
- Carpenter's level and square
- Reversible hand drill $\frac{3}{8}$" and carbide drill bits $\frac{3}{8}$", $\frac{1}{2}$"
- Hammer drill for concrete fasteners
- Pry bar
- Chain hoist
- Hand dolly
- Pendant control for construction and inspection
- Scratch point awl
- Plumb bob and line
- Chalk line
- Wire puller (50' of $\frac{1}{8}$" fish tape)
- Vise-grip pliers (standard and wide jaw welder's type)
- 100 foot (30 m) extension cord (minimum 14 gauge wire)
- 10" medium cut file (for filing joints)
- Scaffolding or ladders and planks to aid in rail assembly
- Wire strippers
- Trouble light for hoistway
- $\frac{1}{2}$" rope, minimum length is maximum length of hoistway
- Rubber mallet
- Cable or nylon strap of adequate strength to lift sling
- Coated steel shims, minimum 4" square
- Wall anchors
- 14 gauge wire for motor and light wiring
- Assorted electrical wire connectors and crimping tool
- $\frac{1}{2}$" electrical box connectors
- 25' tape measure
- Needle-nose pliers
- Side cutters
- Tin snips (to cut metal strapping around skid)
- Wire crimper
- Drift pin
- Large crescent wrench
- Sawzall
- Safety items: hard hats, safety glasses, steel toe shoes, heavy gloves, safety harnesses, etc.
- Box knife
- Scissors
- Wire marker tape
- Shop vac
- Rags and cleaning solvent
- Rail lubricant
- Mineral spirits
- Silicone sealant
- Materials to close off hoistway during installation
- Metal and wood stud finder
- Wire tie wraps
- Volt-ohm (multi) meter

Check site specifics

1 Prior to delivery, ensure that you have clear access into the building and a clear route to the installation site.
2 For site verification, use the following:
   - Site plan drawings (also referred to as site installation drawings or shop drawings)
   - Written and verbal direction from the owner, electrical and hoistway contractors, inspector, and architect
3 Ensure the pit depth, the travel, and the floor length and width dimensions are the same as on the site plan drawings. If they do not match, the hoistway setup may require modifications or the chains and hoistway cables may require replacement. Contact Savaria's *Technical Support* at 1 (800) 791-7999 for immediate assistance.
4 Ensure the hoistway overhead clearance is the same as on the site plan drawings. If it does not match, contact Savaria's *Technical Support* for immediate assistance.
5 Ensure the hoistway width and depth are no smaller than the minimum dimensions on the site plan drawings.
6 Ensure the hoistway walls are plumb to avoid running clearance faults.
7 Ensure the rail side of the hoistway wall is square with the door openings.
8 Ensure the hoistway construction of the vertical stacks is the same as on the site plan drawings and that construction is plumb, square, and solid. During rail assembly, the L brackets that attach to the rails must attach to the 2 x 10 vertical stacks for safety, regardless of the rail centerline. Contact Savaria's *Technical Support* if it appears that an L bracket does not attach to a vertical hoistway stack.
9 Ensure electrical installation of the fused main disconnect with auxiliary contact (230 VAC - 30 Amp) and the fused lighting disconnect (120 VAC - 15 Amp) are complete.
10 Ensure there are no fire and safety issues. Contact Savaria's *Technical Support* if fire and safety issues are found.
11 Ensure the motor location and direction at the top of the hoistway is in line with the Motor Access Door. The hand crank side of the motor must face the Motor Access Door for initial hand cranking when installing the chains and for hand cranking due to either complete power failure or safety lowering. Contact Savaria's *Technical Support* if the motor crank side does not face the Motor Access Door.
12 Ensure the maximum total travel between top of pit to bottom of floor is not greater than 12 feet without additional support. Ensure each subsequent bottom of floor to bottom of next floor is not greater than 12 feet. Contact Savaria's *Technical Support* if the maximum travel exceeds 12 feet.
13 Be sure to follow the 3/4" & 4" rule as per the Eclipse Planning Guide when adjusting the cab floor for clearance between the cab floor and the landing edge at each floor. In addition, the cab floor should be plumb and equidistant to each landing edge on all floors. You'll need to adjust the cab floor to ensure strict compliance with the 3/4" & 4" rule.

Unpack and check shipment

1 Prior to installation, unpack the shipment and check the contents.
2 Check the condition of the shipment for any damage; installing damaged parts can lead to safety violations and void the limited warranty. Contact Savaria's *Technical Support* if any parts are damaged.

NOTE

If possible, take a photograph of any damaged part(s).

NOTE

This elevator requires 230 VAC, 30 amp, single phase, 60 Hz with ground; in addition, use a separate 115 VAC, 15 amp single phase 60 Hz with neutral circuit for car lighting. Do not use G.F.I. circuit breakers.

List of steps in this guide

Steps	Page
Rail assembly	6
Drive system installation	14
Remove motor brake handle from job site (if installed)	15
Chain and chain guard	16
Top shoring bracket and rail buffers	17
Motor access door attachment	19
Controller box	20
Wiring harnesses	22
Hall calls	23
Pit stop switch	24
Power, disconnect and motor wiring	25
Motor access door wiring	28
Counterweights and lifting rods	29
Sling assembly	31
Chain to counterweight rods	34
Chains to lifting bracket assembly	37
Cab floor attachment	38
Tape and tape reader (selector)	39
End of travel switches	46
Slack chain (plank) switch test	46
Installation of Savaria type "A" Speed Arrestor	48
Install floor zone switches and cam	52
Interlock installation	53
Install Reset Switch	54
Install light screens	55
Cab types – order of installation	56
Cab assembly	71
Car operating panel (COP)	76
Cab types – differences	77
Phone installation	79
Car top box	80
Traveling cable connections	83
Gate pocket assembly	86
Gate assembly	87
Gate operator (Porta or Savaria Gatemate)	91
Gate operator wiring	95
Gate operator board and limit switches	96
Manual gate switch assembly and wiring	100
Pit buffer shim assembly	101
Controller access through cab	102
Controller access safety switches	103
Fully assembled test	104
Program COP position indicator (if required)	105
Program hall call position indicator (if required)	108
Test emergency battery lowering function	110
Before leaving job site	110
Appendix A Electrical Schematics	112
Appendix B P-Tool Information	112
Appendix C Diagnostic Beep Codes	118
Appendix D Maintenance	119
Appendix E 110V Gate Operator	119
Appendix F Savaria Link Option	128
Appendix G Speed Arrestor Spin Test	129
Appendix H RATH 2400 Installation and Operation	135

Follow the instruction steps to ensure your safety during Eclipse installation. Failure to follow instructions renders the Limited Warranty null and void. In addition, any party installing the product who deviates from the installation instructions agrees to indemnify, save, and hold harmless the manufacturer from any and all loss, liability, or damage that may occur as a result of the deviation.

Step 1
Rail assembly

Assemble the rails.

NOTE

If the sling and base rail assembly are too large to fit in the hoistway, you can disassemble the sling from the rail assembly. Refer to the *Eclipse Maintenance and Troubleshooting Guide* for sling disassembly and assembly.

Procedure

1 Ensure the pit is clean of debris.

NOTE

Ensure the hoistway dimensions are the same as those on the plan drawings. Check the pit depth, total travel, hoistway width, hoistway depth, and overhead.

2 Ensure the shipped rail heights match the plan drawings.

Identify the disassembled rails:

a. Base section is 96" assembly no. 227800.

b. Middle section is 96" assembly no. 227227.

c. Top section with header for motor is custom length for each installation. Top section header has holes for motor mount installation and a larger hole for chains and chain guides.

⚠ CAUTION

The base rail section with sling and lifting assembly weighs 380 lbs (173 kg). The middle rail section weighs 170 lbs (77 kg). Please provide appropriate lifting equipment and personnel to ensure your safety.

3 Determine and mark the hoistway centerline to place the base rail section.

Figure 1
Plan drawing showing hoistway centerline

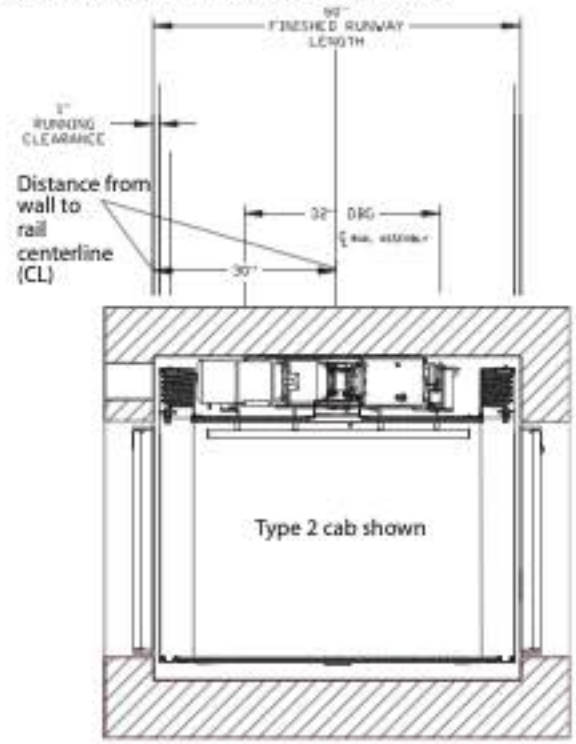

4 Place the base rail section in the hoistway.

NOTE

Before proceeding with the rail installation, check if the unit shipped with rollers. If the unit did ship with rollers, remove the shipping bolts that from the bottom rail section.



5 Move the base section to the wall and align the rail bracket centerline with the hoistway centerline.

Figure 2
Rail bracket centerline

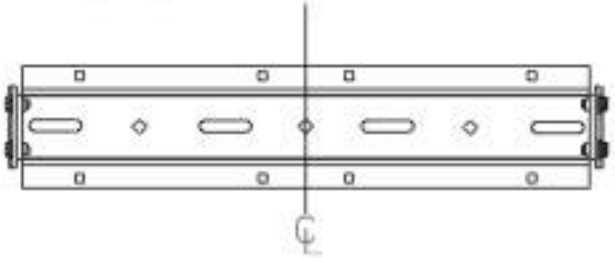

6 Remove the temporary shipping bolt from the sling at the top of the traveling counterweight housing.

The temporary shipping bolt stops the traveling counterweight housing from moving during shipping.

Figure 3
Base with sling assembly

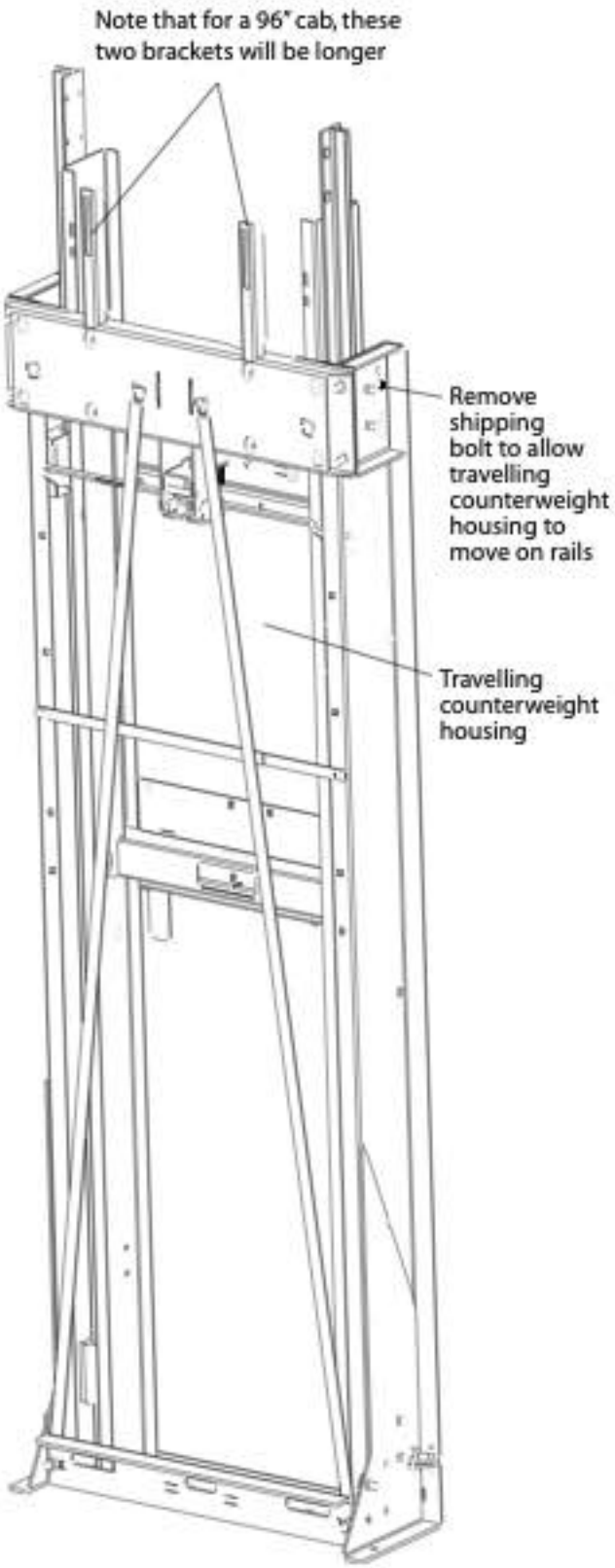

7 See Figure 4 on the next page. For a wooden hoistway, bolt the base section through the top rail bracket holes (1) to the supporting wall to temporarily secure the base. Bolt from pre pack 207124 (1/2" hardware).

IMPORTANT

Note that the anchors provided by Savaria are standard/typical anchors and are not suitable for all site conditions. Always make sure the anchors used are proper for the type of wall on site.

⚠ DANGER

Ensure the hoistway wall construction at the two lag bolt attachment points on each rail bracket is thick enough to hold the temporary lag bolts. If not, use the L-brackets directly, without first using the temporary lag bolt holes. See Figure 10 on page 12

8 For a concrete hoistway, bolt the base section through the top middle rail bracket hole (2) to the supporting wall to temporarily secure the base. Bolt from pre pack 207125 (1/2" hardware).

IMPORTANT

Note that the anchors provided by Savaria are standard/typical anchors and are not suitable for all site conditions. Always make sure the anchors used are proper for the type of wall on site.

NOTE

Ensure the base section is plumb and level before adding the second rail section. Shim the base if it is not level or if it is lower than the plan drawings indicate.

9 Insert the 2nd rail section into the base section and bolt the two rail sections together (3) from pre pack C5290148 (was 227005).

NOTE

Use pre pack 207124 or 207125, and C5290148 (was 227005) to bolt each rail section and header section.

NOTE

Hammer in the U channels as necessary to assist in joining the rail sections together.

Figure 4
2nd rail section and temporary lag bolts

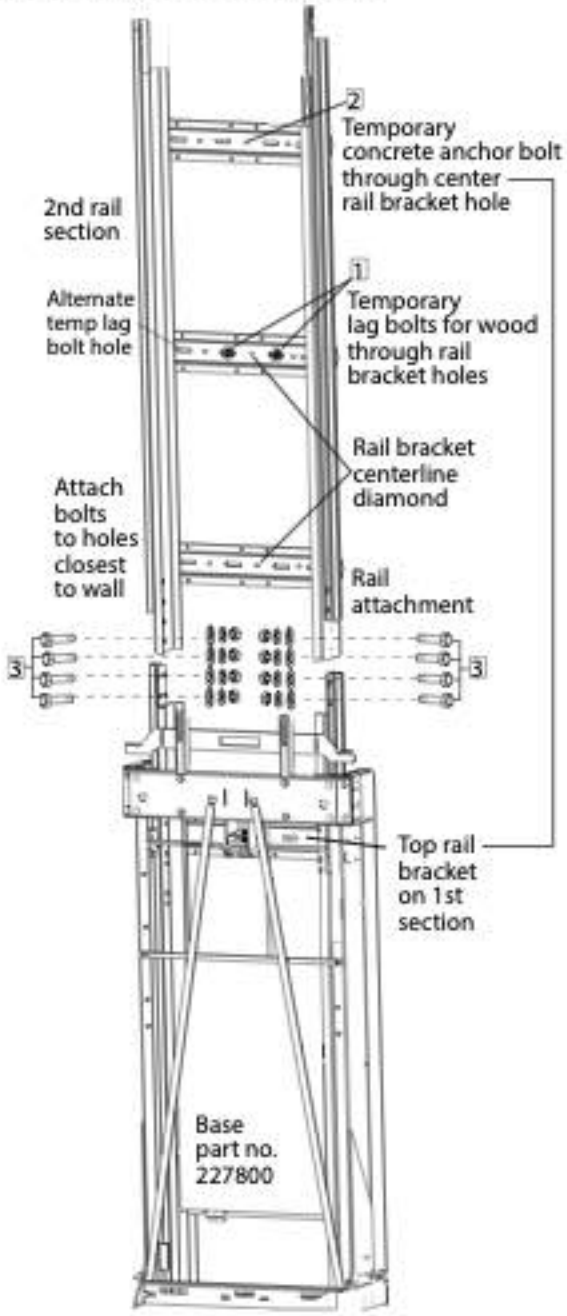

Attach with pre pack 207124 or 207125 and C5290148 (was 227005)

1) 2 x ½" x 3" lag bolts per bracket	2) 1 x ½" x 4 ¼" anchor wedge ½" lock washer ½"-13 hex nut
3) 4 x ½" x 1¼" hex head bolts 4 x ½" lock washers 4 x ½" nuts 4 x ½" flat washers	

Figure 5
Detailed view of rail attachment (3) right hand side

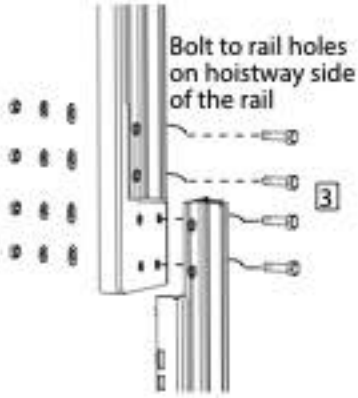

10 Attach the 3rd and 4th rail sections, where applicable. Bolt the rail sections together first and then bolt through the rail bracket holes to the supporting wall.

IMPORTANT

Note that the anchors provided by Savaria are standard/ typical anchors and are not suitable for all site conditions. Always make sure the anchors used are proper for the type of wall on site.

NOTE

Hammer in the U channels as necessary to assist in joining the rail sections together.

11 Insert the top header section (see Figure 6) and bolt the rail sections together.

CAUTION

Do not damage the top section over-travel safety switches for the traveling counterweight housing on the chain guides assembly when attaching the top header section. Refer to Figure 6 on page 9.

12 Bolt the header section through each rail bracket hole section to the supporting wall.

IMPORTANT

Note that the anchors provided by Savaria are standard/ typical anchors and are not suitable for all site conditions. Always make sure the anchors used are proper for the type of wall on site.

⚠ CAUTION

Bolt each of the last three brackets below the header to add top support for the entire lift.

Figure 6
Top section rails

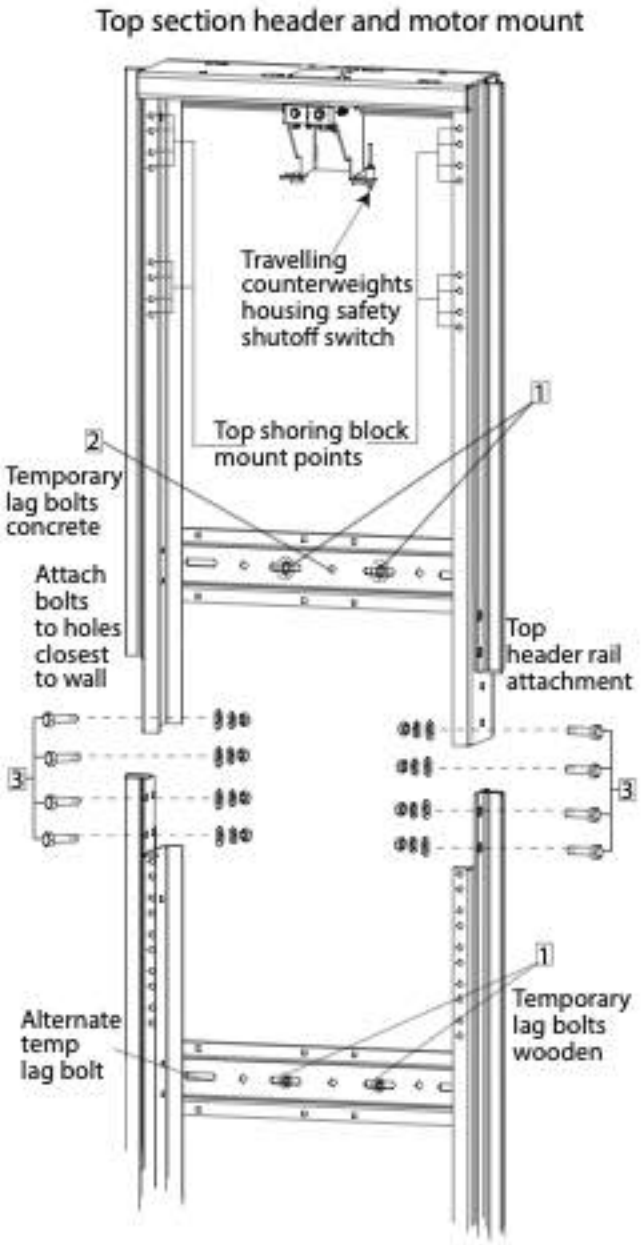

13 Use a level to check the straightness of each rail joint.
Start at the bottom and work to the top.

NOTE

If there is daylight between the level and the channel joint on either the front or side, loosen the joint bolts and straighten. Gaps between the channel at the channel joint are normal. There is no gap between the rail joints.

14 Add rail shims to each rail joint, part no. 227107; always shim the rail joints.
Use a rubber mallet to force the shim in between the rail and U-channel until each shim is flush with the rail. With the rails still joined, tap in each shim. Note that the 90° extrusion on the shim faces away from the rail.

NOTE

The extrusion on the shim can show signs of stress as you tap the extrusion into the tight space between the U-channel and the T-rail. This is normal.

Figure 7
Rail joint straightness

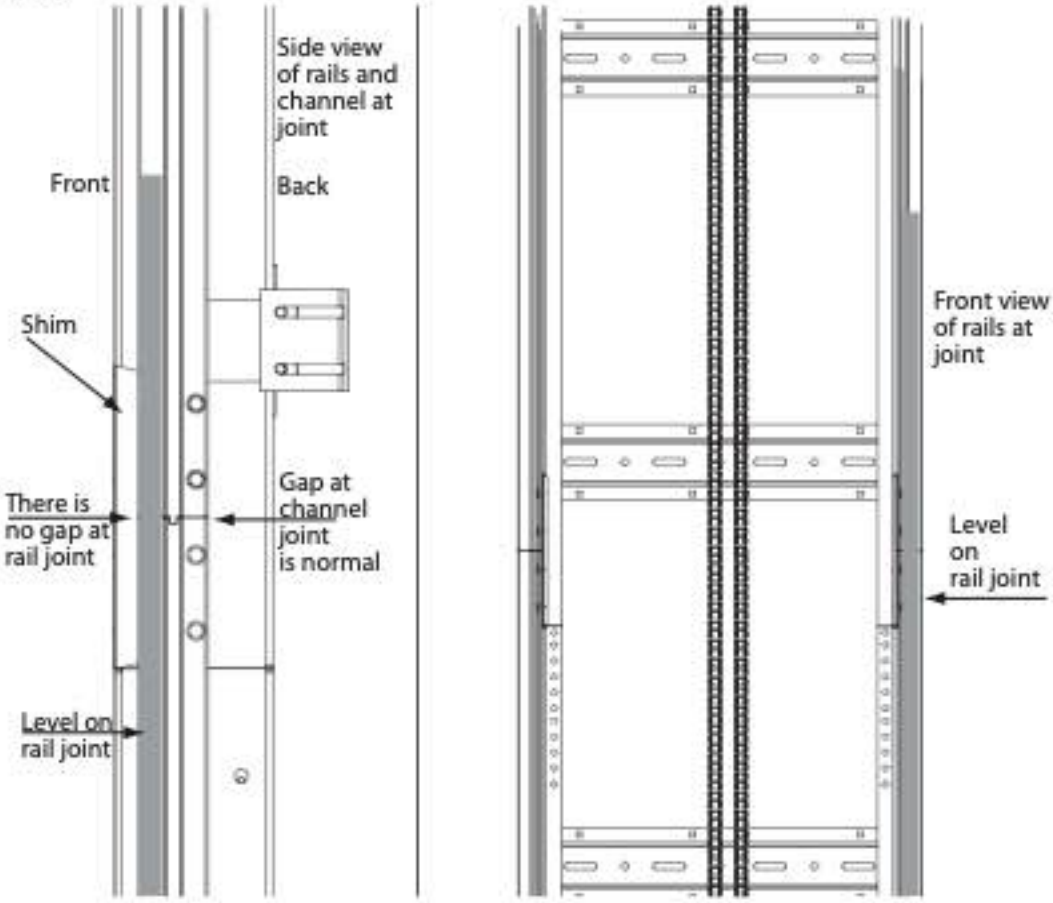

Figure 8
Shim between rail and U-channel exploded view

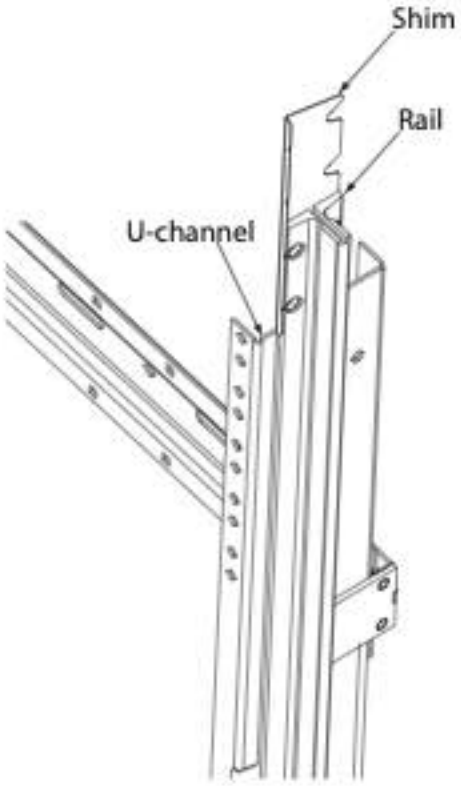

15 Plumb the rails.

The shim design allows each shim to align with each rail section's four bolts. You can loosen and torque each rail section bolt to ensure the joints are plumb.

NOTE

When plumbing the rails, shift the plumb line out from the rail at both the top and bottom of the rail by the same horizontal distance to work around the sling pre-assembly.

NOTE

Attach a clamp on either side of a vertical rail joint, or use a $\frac{1}{8}$" wrench or crescent wrench to twist the joint straight.

16 For a wooden hoistway, assemble the L-brackets (leaf brackets) to the rails (both sides_ and to the wooden hoistway wall (both sides).

Be sure to bolt through the 2" x 10" section of the hoistway wall so that the lag bolts hold.

DANGER

Do not bolt only through the plywood hoistway walls. Bolt at 2" x 4".

Figure 9
Front view of wooden hoistway wall support areas for lag bolts

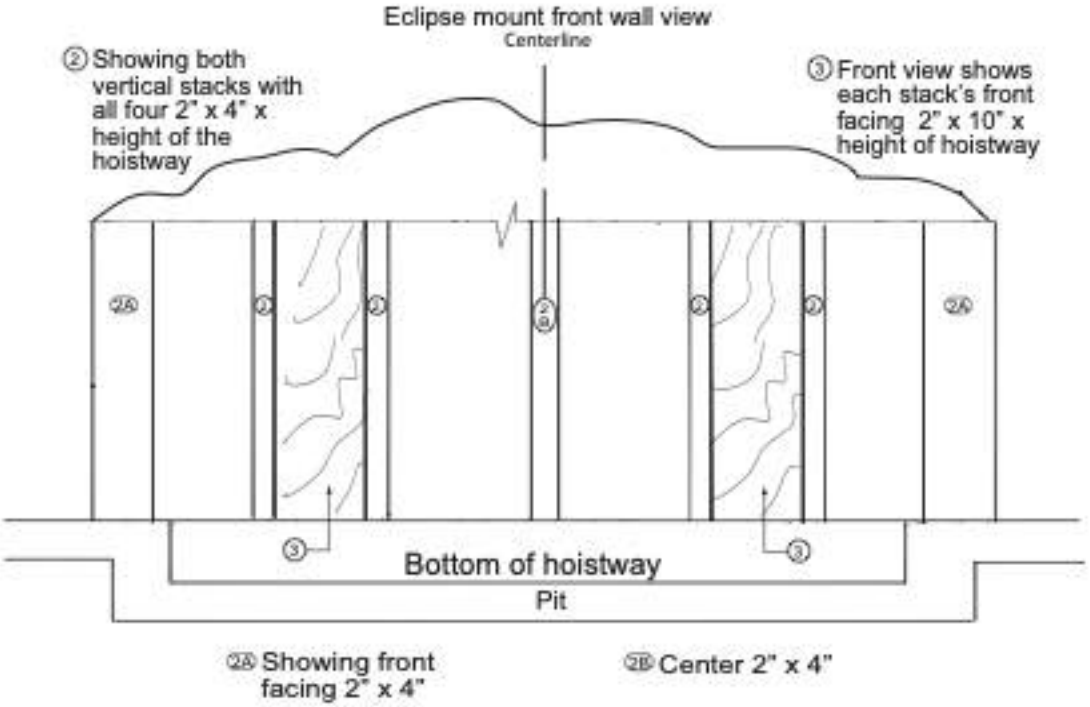

Figure 10
L-brackets with wooden hoistway wall

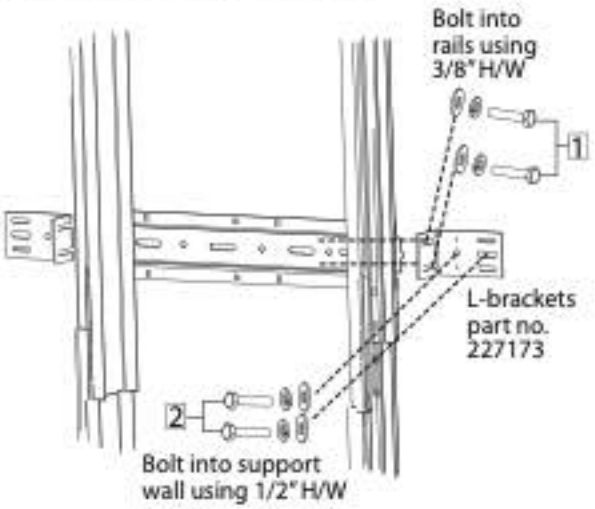

Attach with pre pack C5290148 (was 227010) to rail/secure with pre pack 207124 to wall

1) 2 x $\frac{3}{8}$" x 1" hex bolts to the rail, bag no. 207124 2 x $\frac{3}{8}$" lock washers 2 x $\frac{3}{8}$" flat washers	2) 2 x $\frac{1}{2}$" x 3" lag bolts to the wooden supporting wall 2 x $\frac{1}{2}$" lock washers 2 x $\frac{1}{2}$" flat washers

17 For a concrete hoistway wall, assemble the L-brackets (leaf brackets) to the rails (both sides) and secure to the concrete hoistway wall (both sides).

NOTE

If you must shim the L-bracket to allow for horizontal shift from the hoistway wall greater than the slots in the L-brackets allow, be sure to shim the L-brackets before you tap in the concrete lag bolts, and be sure to use longer lag bolts.

Figure 11
L-brackets with concrete hoistway wall

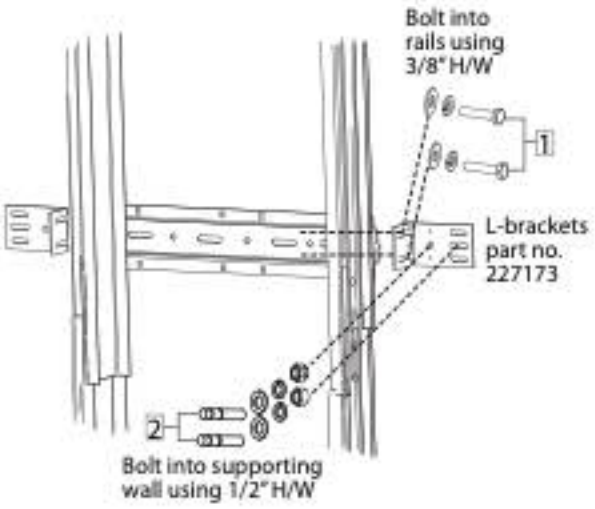

Attach with pre pack C5290148 (was 227010) to rail/secure with pre pack 207125 to wall

1) 2 x $\frac{3}{8}$" x 1" hex bolts to the rail, bag no. 207124 2 x $\frac{3}{8}$" lock washers 2 x $\frac{3}{8}$" flat washers	2) 2 x $\frac{1}{2}$" x 4$\frac{1}{4}$" concrete lag bolts to the concrete supporting wall 2 x $\frac{1}{2}$"-13 lock washers 2 x $\frac{1}{2}$" flat washers

18 Install the pre-assembled rail brackets using the wall fasteners making sure that the brackets are level. If through-bolts (200181) are used, cut off the excess threaded rod protruding from the rail brackets. Use pre pack 207042 to install the rail brackets.

Figure 12
Cut off excess through-bolt



19 Anchor the base rail section to the pit floor. Use pre pack 227566.

IMPORTANT

Note that the anchors provided by Savaria are standard/typical anchors and are not suitable for all site conditions. Always make sure the anchors used are proper for the type of floor on site.

CAUTION

The lag bolts must not pass through the concrete completely to ensure their ability to wedge and tighten.

NOTE

Ensure the rails are level and that the base does not require shims before you anchor the base to the pit floor.

Figure 13
Base concrete anchor bolts

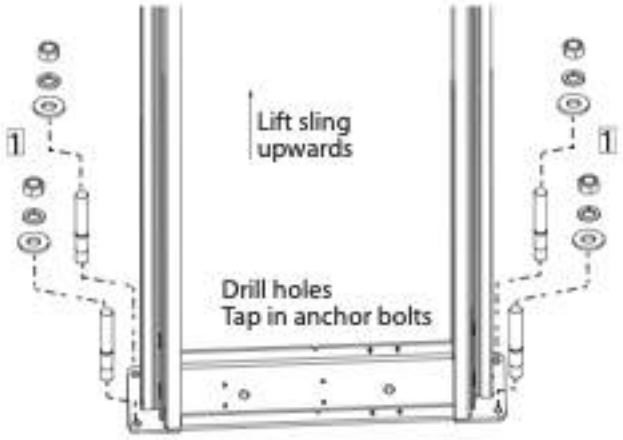

Attach with pre pack 227566

1) 4 x $\frac{1}{2}$" x 2$\frac{1}{4}$" concrete anchor wedge bolts 4 x $\frac{1}{2}$" flat washers	4 x $\frac{1}{2}$" lock washers 4 x $\frac{1}{2}$" hex nuts

20 As a final check, ensure that all rail brackets are permanently anchored to the supporting wall using the 1/2" hardware from pre pack 207124 (for a wooden hoistway) or 207125 (for a concrete hoistway).

IMPORTANT

Note that the anchors provided by Savaria are standard/typical anchors and are not suitable for all site conditions. Always make sure the anchors used are proper for the type of wall on site.

NOTE

Once the rail plumbing process is complete and the rail sections are secured, file or grind the rails smooth so that there are no bumps at the rail joints or in the rails. Having a rough or stepped surface at rail joints can cause premature damage to guide shoes or rollers.

Step 2
Drive system installation

Attach the motor.

Considerations

Ensure the manual crank side faces the motor access panel. Refer to your plan drawings for mounting direction.

NOTE

Some units include a motor extension that raises the motor 3" from the top of the header. This allows for a higher motor mount without changing the standard top rail length. Refer to Figure 23 on page 17.
If your unit includes an extension, it is pre-assembled to the top rail header. The assembly hole locations to attach the motor are the same with or without the extension.

The motor mount that is pre-assembled to the motor is always used, whether or not there is a 3" extension.

Figure 14
Motor mount attachment to motor (pre-assembled)

Manual emergency hand crank faces motor access door

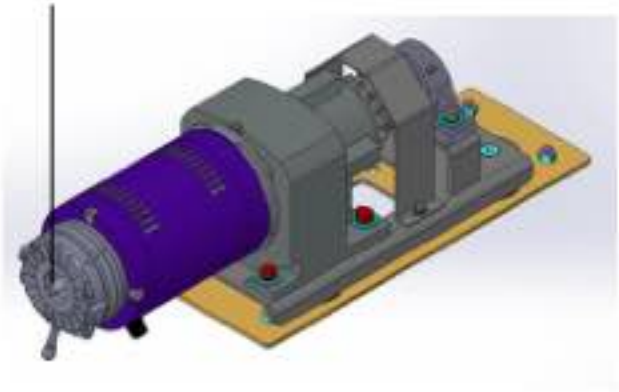

⚠ CAUTION

The drive assembly weighs approximately 107 lbs (49 kg). Handle with care.

Procedure

1 Carefully hoist the drive assembly to the top of the rail tower and attach.

Figure 15
Motor mount

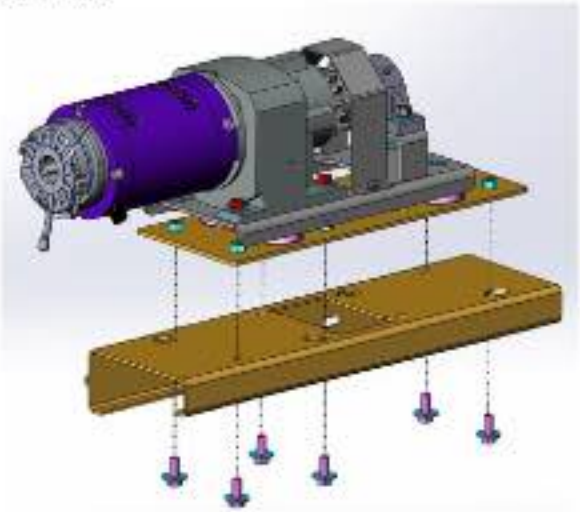

Attach with hardware below

1) 6 x $\frac{1}{2}$" x 1$\frac{1}{4}$" hex head bolts
   6 x $\frac{1}{2}$" flat washers
   6 x $\frac{1}{2}$" lock washers
   6 x $\frac{1}{2}$" nuts

Motor wiring harness part no. 227289 attaches to the main controller. Refer to STEP 8 for information on wiring.

2 After the motor is installed, you MUST remove the plastic piece from the motor gear (see below).
- If this plastic piece is not removed, the motor/gear assembly will seize.
- This piece is put in place at the factory to ensure that gear oil does not leak during transportation and installation.
- Do NOT power up the motor until after this plastic piece is removed.

Figure 16
Plastic piece on motor gear



Step 3

Remove motor brake handle from job site (if installed)

Remove the motor brake handle from the job site (if installed)

Considerations

IMPORTANT: The motor brake handle should not be installed. If for some reason it is installed, remove it from the motor and remove it from job the site to ensure that motor brake *manual release* cannot occur.

⚠ DANGER

FALLING DANGER

Release of the motor brake can cause the elevator to move downwards if the weight balance between the sling and counterweights is not even—the safeties do not engage in this circumstance. Do not attach the manual brake handle to the motor. Do not use the manual brake handle.

Procedure

1 Remove brake handle from motor, if attached.

Figure 17
Brake handle attached to motor

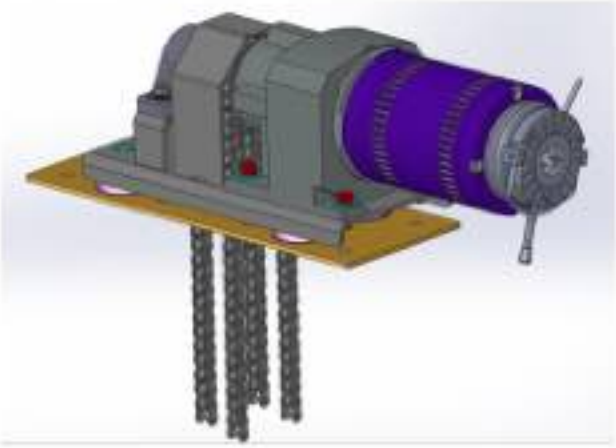

Figure 18
Turn wrench counterclockwise to remove

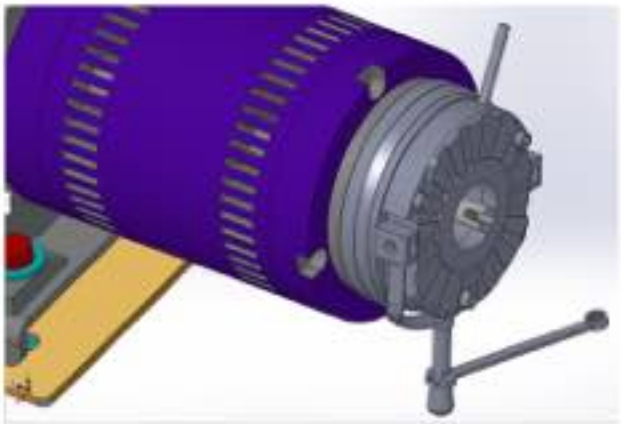

Figure 19
Brake handle at attachment point

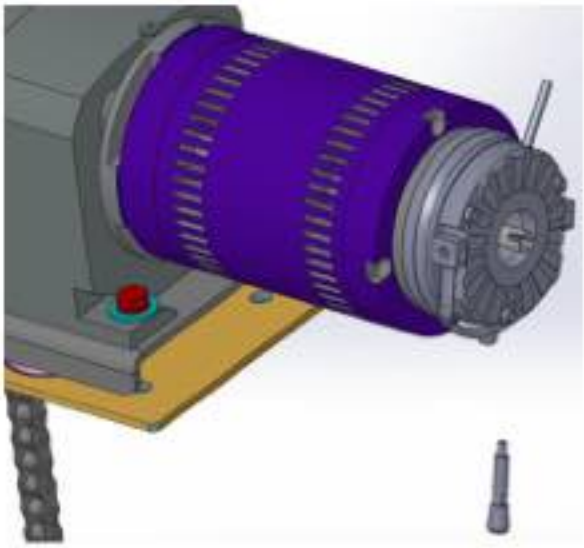

2 Remove motor brake handle from job site.

Step 4
Chain and chain guard

Loop the chains over the motor sprockets and install the chain guard.

Considerations

The motor brake is always on unless the motor is energized and moving. It is spring applied in the on position while the lift is not moving and when the power is off.

Procedure

1 Install each chain over the top of each motor sprocket. The chains are in the heavy parts box.

⚠ DANGER

FALLING DANGER
A falling chain can cause injury and death. Ensure there is no one beneath chain when installing over the sprockets.

2 Attach the chain guard part no. 327178 to the top of the motor sprockets.
The chain guard ensures the chains cannot detach (jump) from the sprocket and fall.

Figure 20
Chain guard

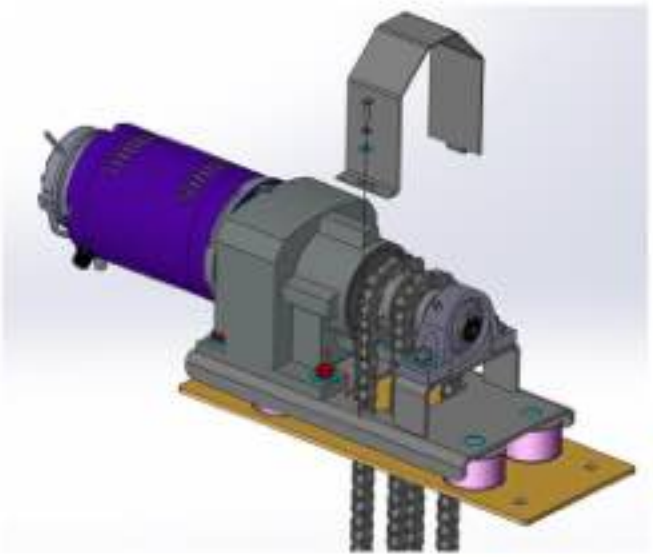

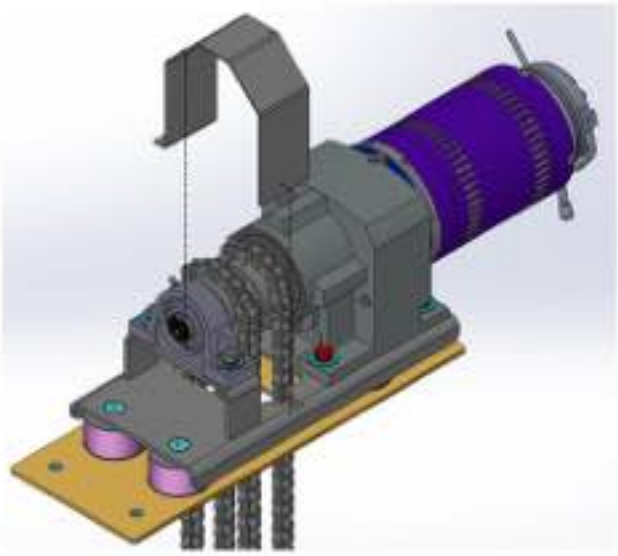

Attach with hardware below

1) 1 x $\frac{1}{4}$" flat washer 1 x $\frac{1}{4}$" lock washer	1) 1 x $\frac{1}{4}$" x 1" hex head bolt

Step 5
Top shoring bracket and rail buffers

Attach the top shoring bracket and install rail buffers.

Considerations

The shoring brackets are physical stops that ensure the sling and cab do not overrun either the top of the hoistway or the bottom of the hoistway (in addition to a pit buffer, where required). They stop the elevator in case of limit switch failure and in case of top safety switch failure.

You can place the bottom shoring bracket part no. 227565 at different points on the lift for maintenance safety purposes. There are holes along the rails that the shoring brackets fit into.

Figure 21
Shoring bracket (bottom)

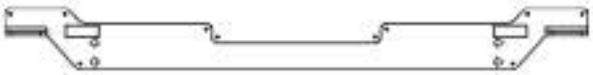

DANGER

Always use the bottom shoring bracket during maintenance to ensure the lift does not fall when you are underneath.

CAUTION

Assemble the top shoring bracket to the U-channels before running the sling.

Procedure

1 Determine the top shoring bracket mount point (depends on cab height, and with or without motor extension mounting plate 227247).

Figure 22
Top shoring bracket mount locations

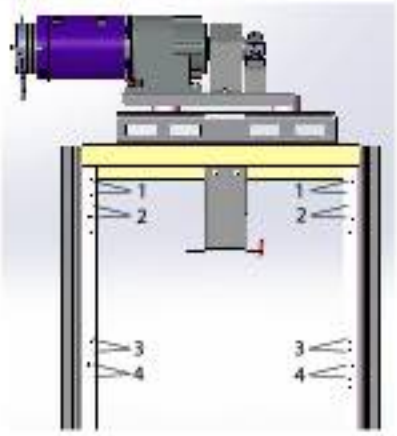

1) 80" cab height with motor extension plate	2) 80" cab height without motor extension plate
3) 96" cab height with motor extension plate	4) 96" cab height without motor extension plate

2 Assemble the top shoring bracket assembly no. 227244 right hand or 227244-L left hand.

Use left hand assembly if motor access door location is on left hand side of hoistway—as you face hoistway.

Figure 23
Shoring bracket (top)

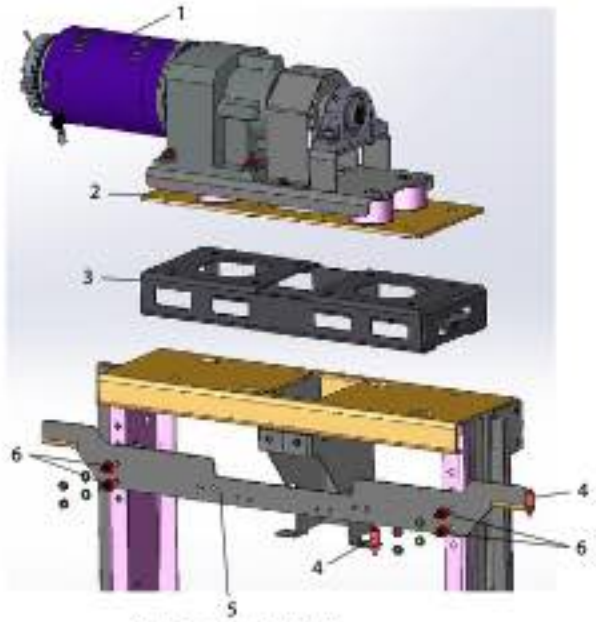

Shoring bracket (5) attached to top mount position for an 80" cab with 3" motor extension

Attach with pre pack 227248

1) motor	2) motor mount
3) motor extension plate 227247 (pre-assembled if included) - not shown	4) safety switches
5) shoring bracket	6) 4 x $\frac{3}{8}$"-16 x $\frac{1}{4}$" carriage bolts 4 x $\frac{3}{8}$" lock washers 4 x $\frac{3}{8}$" hex nuts

Rail buffers

To mount the rail buffers, proceed as follows:

1 Calculate the following:
   - Depth of the pit minus 13.25"

2 Place a level at the door entrance and mark the height (that you calculated above) on the rail.

3 From the mark, measure the total distance calculated in step 1 and drill a 1/2" (13 mm) hole on the milled rail face.

Figure 24
Rail buffer (left-hand shown)

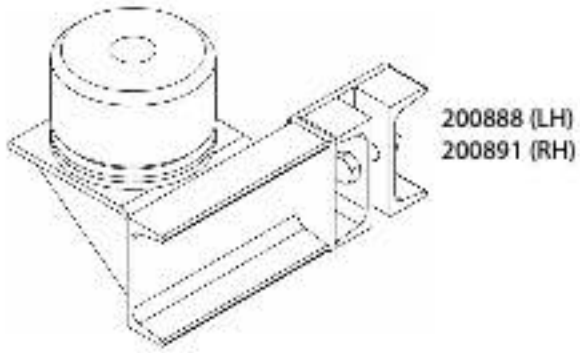

Figure 25
Rail buffer mounted

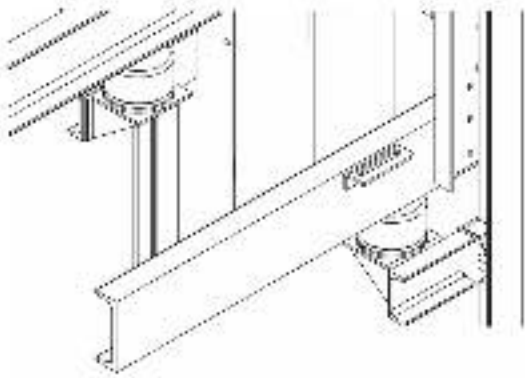

Figure 26
Rail buffer mounting detail

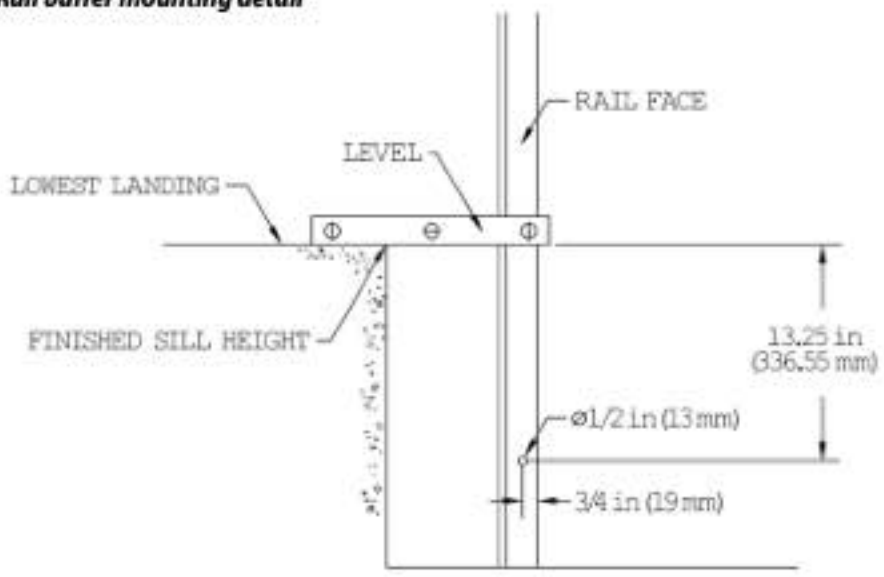

Step 6
Motor access door attachment

Attach the motor access door to the top of the hoistway.

Considerations

If the wall construction at the motor crank is not complete, temporarily attach the motor access door to the hoistway wall.

Be sure to attach the motor access door before running the sling (even if only temporarily) to the hoistway wall, for use with the pendant during lift construction.

The motor access door harness goes to J16 on the main controller board. The motor access door performs the following functions:

- In an emergency, allows access to the motor to hand crank the chain sprockets to bring the lift down (crank included).
- Safety switch turns off elevator power when the motor access door is open.

Refer to STEP 12 for information on how to wire the access door, otherwise; opening the motor access door shuts off all power to the elevator.

⚠ DANGER

During hand crank use, do not press on the door switch. If you do so and the motor suddenly turns on, the hand crank will spin at high velocity causing injury or death!

Figure 27
Motor access door— front



Procedure

1 Cut hole 6 $\frac{7}{8}$ " x 6 $\frac{7}{8}$ ".

2 Attach the motor access door assembly no. 227285.
Align the center of the door with the center of the emergency hand crank shaft on the motor.
Refer to the plan drawings for the vertical height of the motor access door.

3 Screw or nail the motor access door to the wall using the round holes on the outside edge of the door.

Figure 28
Motor access door with hand crank

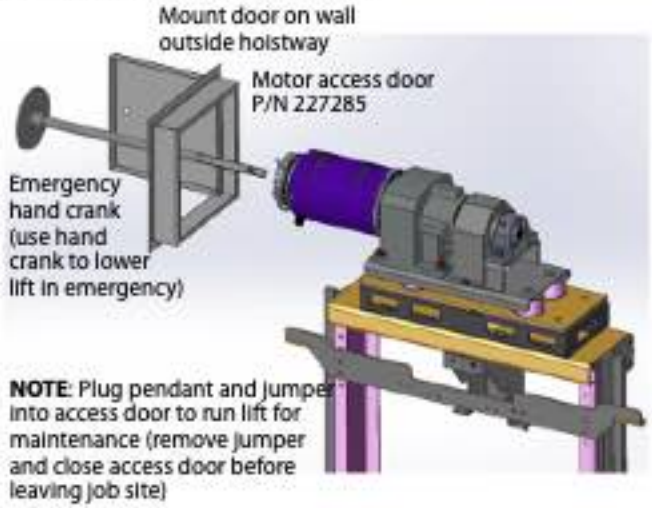

4 Use drywall to feather in the bead on the flat edge.

5 Cover over with drywall and paint.

Step 7
Controller box

Attach the controller box to either a wall (remotely) or between the rails.

Considerations

For projects that require the controller to be installed between the rails, the base ships with the controller top cross support bracket already attached to the rails.

You hang the controller on the top cross support bracket no. 227131 and then shore it with the bottom cross support bracket no. 227021.

Procedure

Controller installed...	See step
Between the rails	1 and 2
Remote	3

1 Loosely mount the bottom cross support bracket with pem studs to the U-channels.

The brackets allow the cross support bracket to slide on the U-channels until you snug them to the controller bottom.

Figure 29
Controller bottom cross support

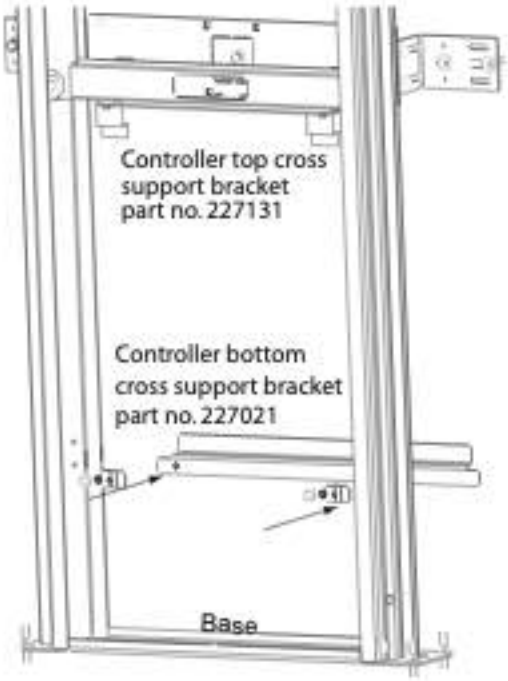

Attach with fasteners included on bracket 227021

2 x $\frac{5}{16}$" flat washer
2 x $\frac{5}{16}$" lock washer
2 x $\frac{5}{16}$" nut

2 Hang the controller box on the top cross support bracket pem studs.

Adjust the bottom cross support bracket as required to hold the controller firmly in place.

Figure 30
Controller mounting

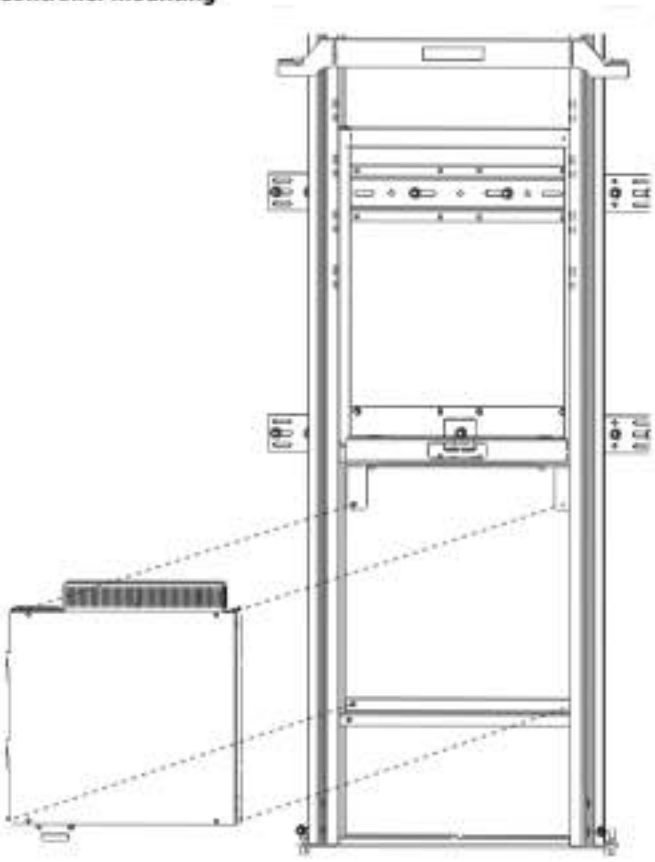

Attach with fasteners on bracket 227131

2 x $\frac{5}{16}$" nut

3 If you have a machine room, mount the controller box on the machine room wall.

The controller bolts to the wall at each bracket corner; use the following mounting hole positions:

- Width 597 mm (23.5")
- Height 546 mm (21.5")

NOTE

The controller box houses the main controller board. A connection diagram for the main controller board is provided on the next page.

NOTE

Make sure that switch SW1 (located on the bottom left quadrant of the board) is set for GEAR or HYDRO as required for the installation.

Figure 31
Controller board (772401) connection diagram

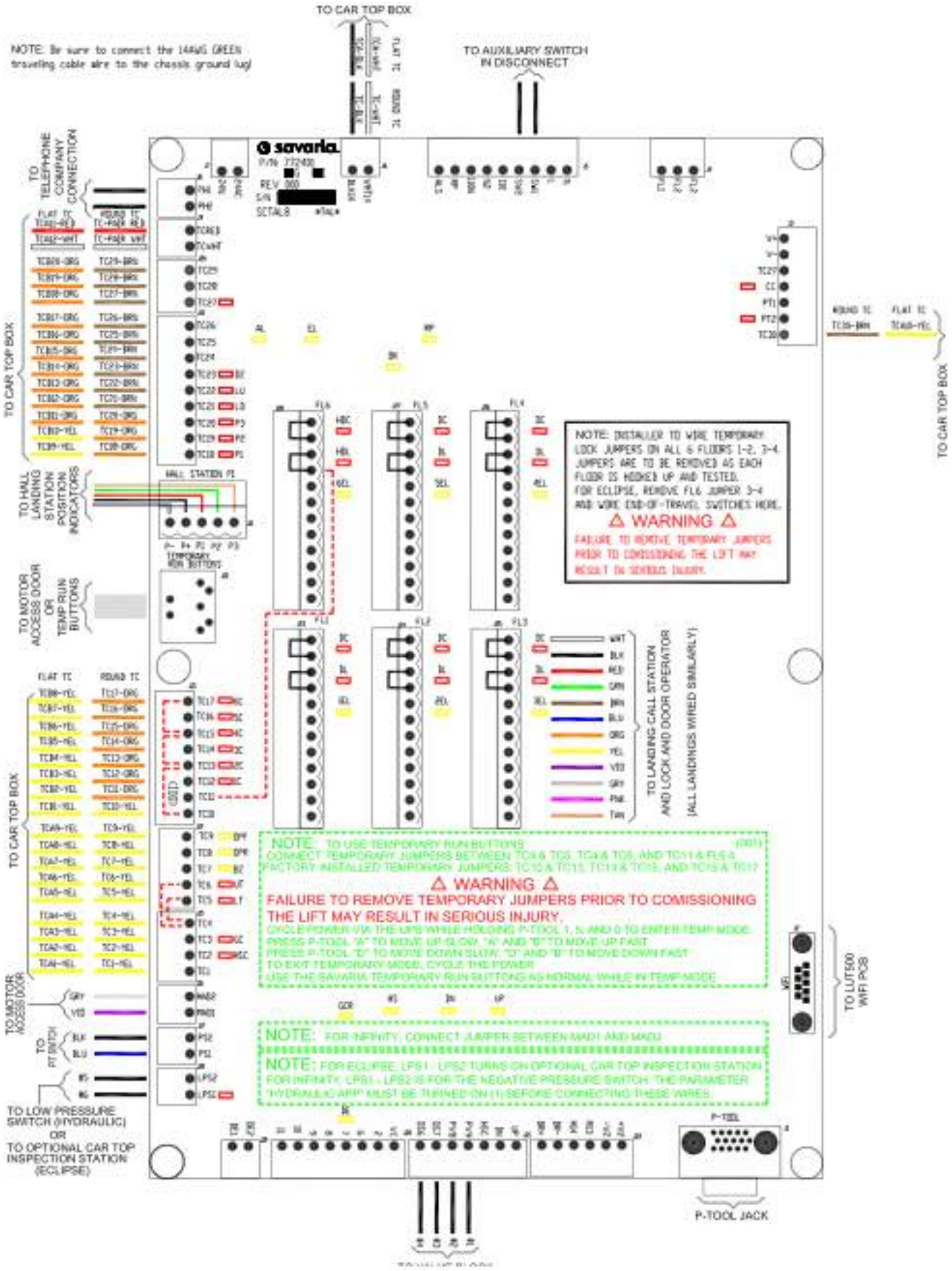

Step 8
Wiring harnesses

Wiring harnesses are shown below. Use this drawing as a general reference when wiring.

Figure 32 Wiring harnesses — use as reference

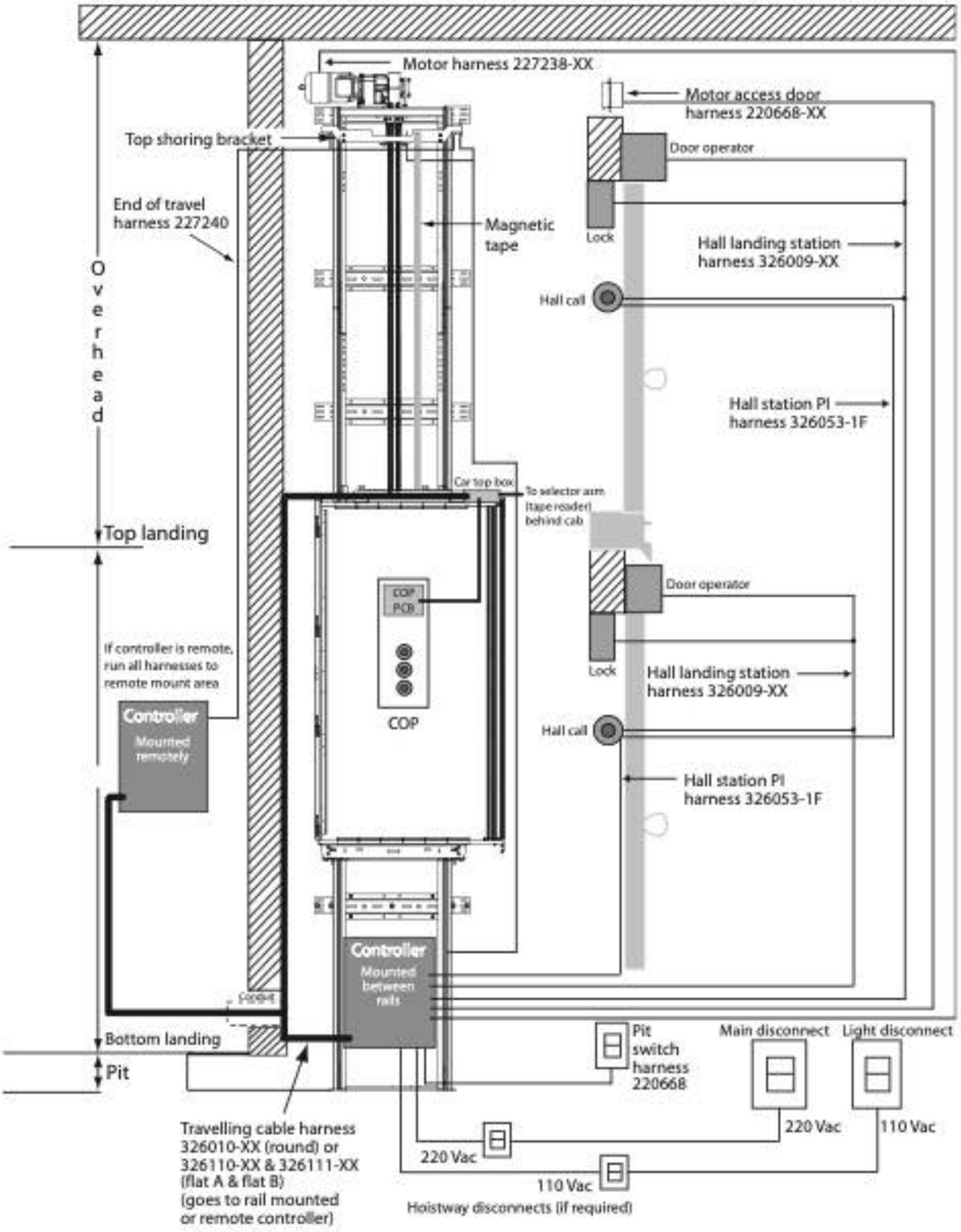

Step 9
Hall calls

Install the hall calls.

Considerations

If the doors and walls are under construction, temporarily attach the hall calls to the hoistway to ensure that you can test Eclipse operation; otherwise, jump the hall calls on the main controller board to ensure that you can test the operation.

Be sure to secure all wiring on the sling. Attempt to secure the wires in such a way that you can remove individual wire connections if required —this method can save maintenance time at a later date.

Procedure

1 Attach the hall calls temporarily to the hoistway wall if door walls are not yet suitably built out.

Figure 33
Hall call

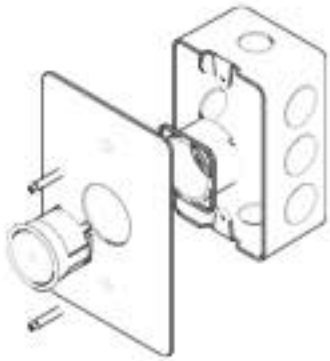

2 Connect each hall landing station harness part no. 326009-XX to the appropriate connector on the main controller board J23 (FL1) to J28 (FL6) – hall calls connect to pins 7, 8, 9, and 10 on these connectors. See the diagram on the right.

This harness carries the signals for the lock and hall call, and door operator (if equipped) to the main controller.

3 IMPORTANT: Be sure to connect a 14 AWG green ground wire (not provided) from the screw on the back of the hall call metal box to the ground bar in the controller.

4 Jump any floor on the main controller board that does not require a hall call.

5 Connect the hall station position indicator (PI) harness part no. 326053-1F from J11 on the controller board to the 1st floor PI board. Then wire from the 1st floor PI board to the 2nd floor PI board, from the 2nd floor PI board to the 3rd floor PI board, and so on up to the 6th floor.

Figure 34
Landing connection diagram

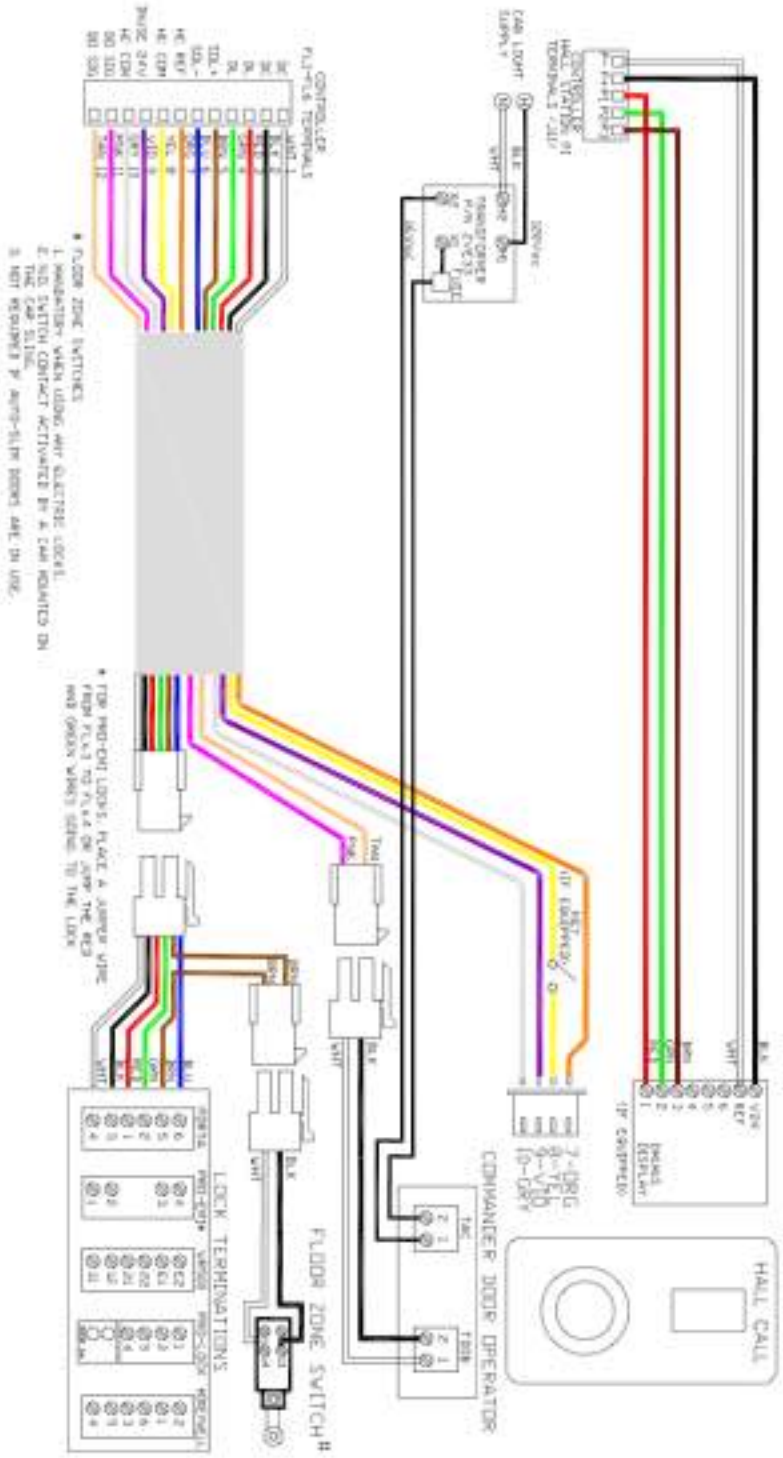

Step 10
Pit stop switch

Install the pit stop switch.

Considerations

The pit stop switch interrupts the logic required to move the elevator up and down.

Attach the pit stop switch box to the wall approximately four feet above the pit on the slam side so that it is accessible once cab, wall, and door construction is complete.

Procedure

1 Assemble the pit stop switch to the wall.

Figure 35
Pit stop switch



2 Run the pit stop switch harness part no. 220668 from the pit stop switch box to J17 on the main controller board.

Step 11
Power, disconnect and motor wiring

Attach the following wires to the main controller:

- Light power
- Main power
- Hoistway disconnects, if equipped
- Motor

Considerations

This section details the wiring connections for power, disconnects and the motor.

NOTE

For complete wiring information, refer to the *Electrical Schematics*.

The photo on the next page shows the layout of the controller box.

If you have disconnects for 110VAC lighting and 230VAC main power in the hoistway, be sure to place them such that you can turn both off while standing beside the hoistway, before you enter the hoistway. **Check the rules and regulations in your area to learn how to place the hoistway disconnects.**

Procedure

1 Run the lighting 120VAC, 15 Amp disconnect from the wall electrical box through the controller access hole and connect to the terminal block in the controller box.

Table 1
Light power

110 VAC light	Connects to...
Green	Ground
Black	H
White	N

2 Run the main 230V, single-phase 20 Amp disconnect from the wall electrical box and connect to the terminal block in the controller box.

Table 2
Main power

230 VAC main	Connects to...
Green	Ground
Black	L1
Black	L2

3 If there are hoistway disconnects, mount the disconnects at the hoistway by the pit, or where local code dictates.

4 Run the motor wires down the hoistway and in through the controller access holes in the main controller box.

Use a pass-through junction box, if required.

5 Connect the six motor wires to the controller.

If the motor gears are not moving the lift in the correct direction, you can move the black, red, and blue wires.

Table 3
Motor wires

230 V main	Connects to...
Black	T1 on contactor in controller box
Red	T2 on contactor in controller box
Blue	T3 on contactor in controller box
Yellow	Ground in controller box
Orange	J22 - BR+ on controller board
Brown	J22 - BR- on controller board
Main auxiliary disconnect	SW1,SW2 (If not equipped, jump SW1,SW2)

⚠ WARNING

Make sure the building ground is connected to the controller ground bus before turning the disconnect on. Improper or no ground can result in shocking hazard and unsafe operation.

Figure 36
Controller box layout (geared controller shown)





Figure 37
Disconnects

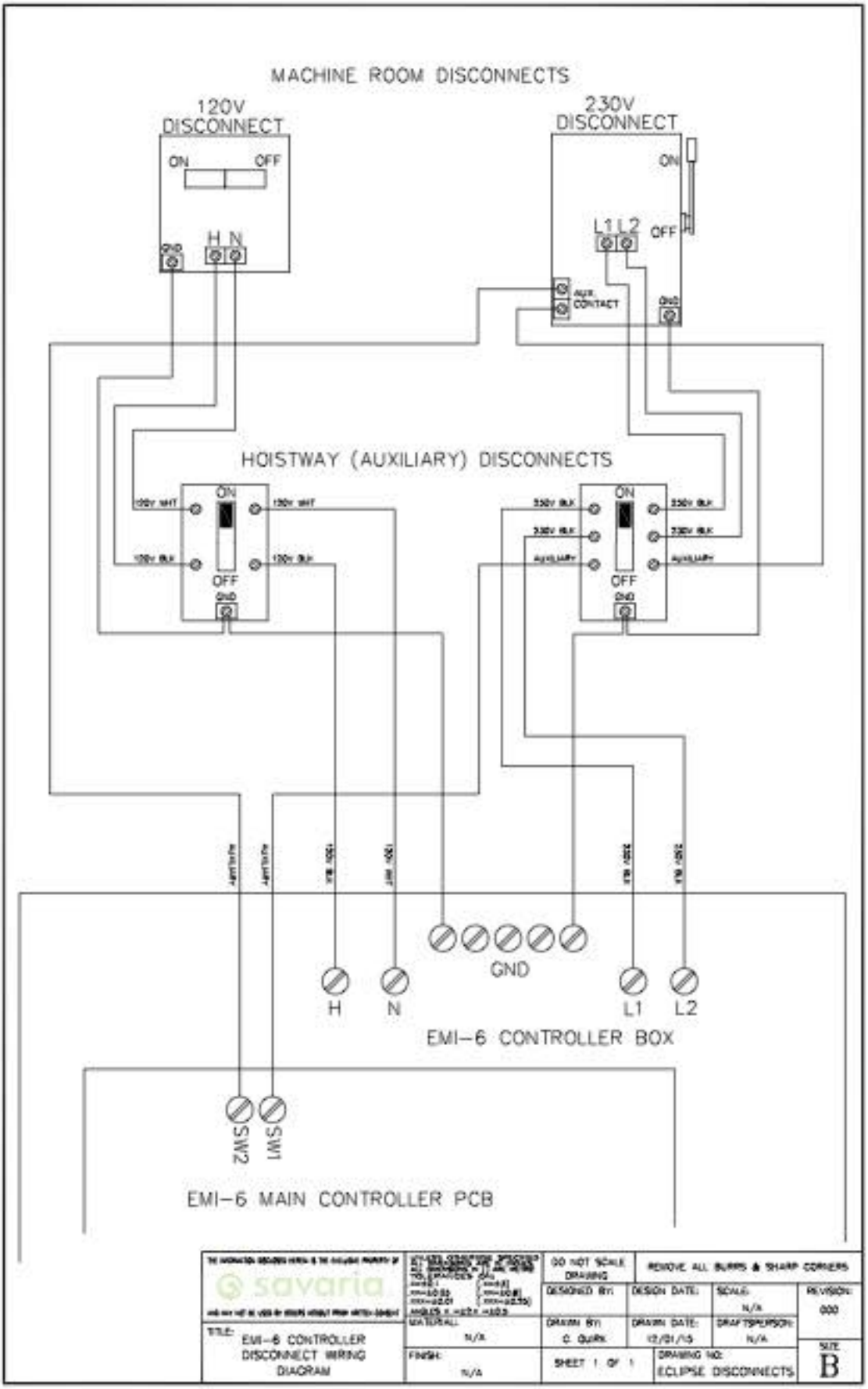

Step 12
Motor access door wiring

Wire the motor access door harness no. 220668-XX including pendant control to the main controller.

Procedure

1 Connect the motor access door harness pendant connector to J12 (TEMP RUN) on the controller board.

2 Connect the motor access door (MAD) harness wires as listed in the table below.

Table 4
Motor access door wires (for machine room version)

MAD	Connects to...
Blue	J16 - MAD1 on controller board
Black	J16 - MAD2 on controller board

Table 5
Motor access door wires (for true machine-roomless version)

MAD	Connects to...
Blue	J15 - TC4 on controller board
Orange	J14 - TC5 on controller board
Yellow	J14 - TC6 on controller board
Violet	J16 - MAD1 on controller board
Gray	J16 - MAD2 on controller board
Pink	J13 - TC11 on controller board
Tan	J28 - FL6.4 on controller board

⚠ WARNING

Make sure the building ground is connected to the controller ground bus before turning the disconnect on. Improper or no ground can result in shocking hazard and unsafe operation.

3 Turn on the main power at the disconnect.

4 Check the voltage with a meter; it should be 230V.

5 Connect the P-Tool (P/N 326049) to J1 on the main controller board. Use the P-Tool to place the elevator in Temporary Run Mode. Refer to Appendix B for instructions on how to do this.

6 *For the true machine-roomless version only*, open the motor access door and install the motor access door override jumper. Connect the pendant (P/N 200438) to the motor access door pendant connector.

7 Use the P-Tool to test the elevator.
The V drive LED frequency changes from an **at rest** *F-5.00 to an* **In use** *F-60.0. The motor sprockets should move.*

⚠ DANGER

FALLING DANGER
A falling chain can cause injury and death.
Ensure there is no one underneath the chains when the chains move on the sprockets without attachment to the weights and sling lifting bracket.

Step 13
Counterweights and lifting rods

Install the counterweights (weights) and lifting rods.

Considerations

Once you fully assemble the Eclipse, rail balance is in part due to correct placement of the weights.

Before you raise the sling to install the counterweights, you must install the bottom shoring bracket for safety.

DANGER

FALLING DANGER
When you raise the sling to insert the shoring bracket, make sure you tie off the sling.

1 Raise the sling two feet above the pit floor and tie it off.
2 Insert the shoring bracket into any of the U-holes.
The bottom shoring bracket quick insert assembly no. 227564 allows you to use it at any point on the U-channels where holes are available.

Figure 38
Bottom shoring bracket

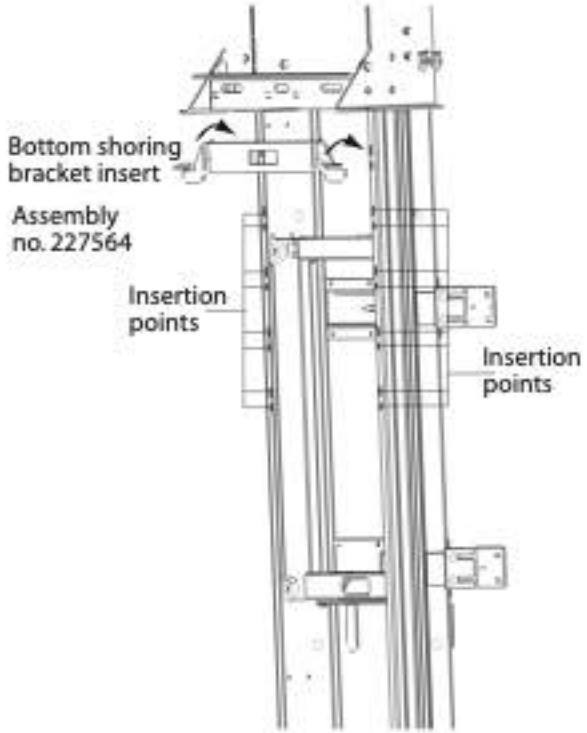

Procedure

1 Insert the weights part no. 227946-C into the traveling counterweight housing **so the wider end of the weight is at the left-hand side of the rails.**

NOTE

The number of weights that ship with your unit depends on a number of factors including rail height and cab size. Verify the number of weights you have with your bill of materials.

NOTE

If necessary, remove the top bracket of the traveling counterweight housing assembly to install the last few weights. Remove the 2 x $\frac{3}{4}$" x $\frac{5}{16}$" right hand side two bolts and loosen left hand side bolts.

Figure 39
Counterweight

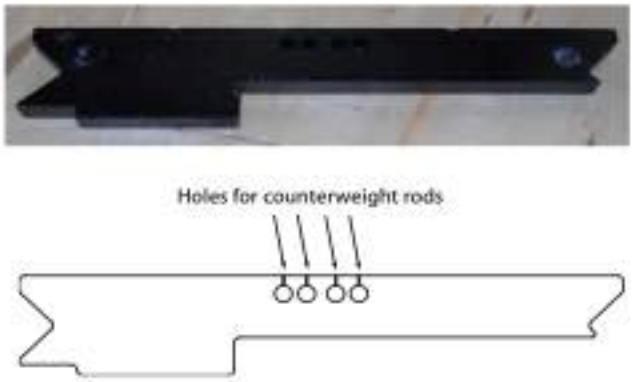

NOTE

When stacking the weights, ensure the holes for the counterweight rods (shown above) line up so the rods can pass through completely.

CAUTION

Verify that the wider end of the weights is at the left-hand side of the rails. If not, remove and reinsert the weights correctly. If the wider end of the weights is at the right-hand side, the weights will damage the overspeed device.

2 Remove the cotter pins, nuts, and flat washers from the counterweight lifting rods part no. 227106 (you'll reattach them at the bottom of the traveling counterweight housing once the rods are through the weights).

Each rod has a coupling for chain attachment at the top; it is always pre-assembled.

Figure 40
Counterweight lifting rods disassembly

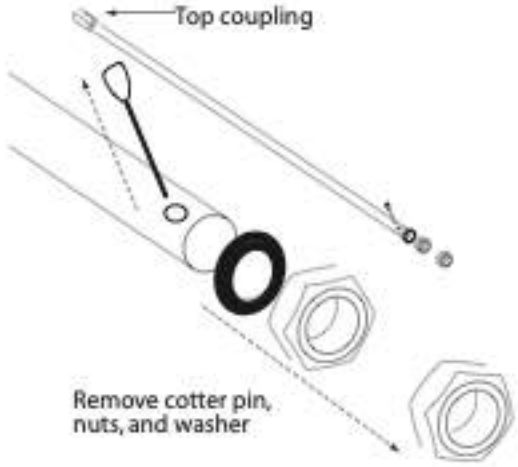

Disassemble fasteners on rods 227106

1)	1 x $\frac{1}{8}$" x $\frac{1}{2}$" cotter pin
	1 x $\frac{1}{2}$" flat washer
	2 x $\frac{1}{2}$" x 13 nuts

3 Slide the lifting rods from the top down through the traveling counterweight housing **holes 2 and 4**; insert the rods through all of the weight holes.

Each rod is $\frac{1}{2}$" x 36" long.

Use a soft mallet to adjust the weights so the rods pass through.

NOTE

In Step 15, you'll attach the chain to the counterweight rods using the chain link in pre pack105656. You'll also attach split nuts to the counterweight rods using pre pack 227009. As you assemble and tighten each counterweight rod and split nut, the weights should flatten in the traveling counterweight housing. Refer to Step 15.

Figure 41
Counterweight rods through counterweight traveling housing and weights

Note: Older version weights shown below; new weights shown on previous page

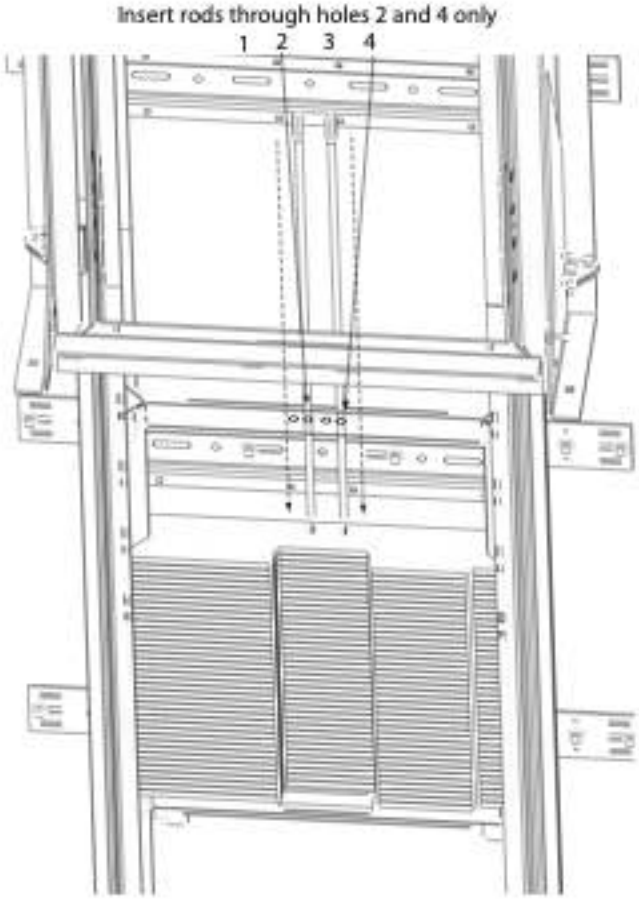

4 Re-assemble washers, nuts, and cotter pin to the bottom of each rod, underneath the weights.

Figure 42
Counterweight rods assembly

Note: Older version weights shown below; new weights shown on previous page

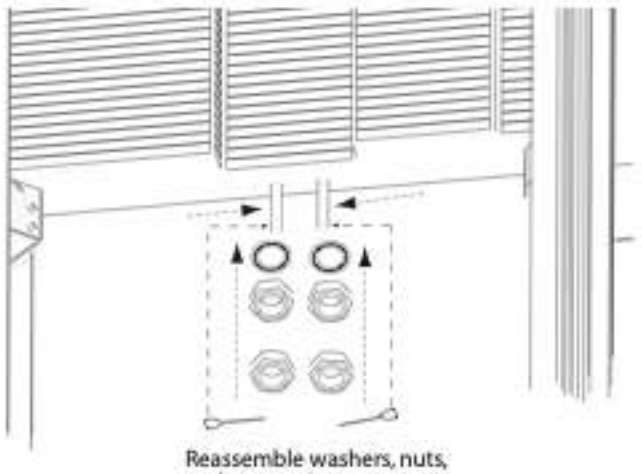

Step 14
Sling assembly

STANDARD SLING ASSEMBLY

This procedure is for the Standard sling. For the Heavy Duty (HD) sling, refer to the next procedure in this step.

Figure 43
Full standard sling assembly

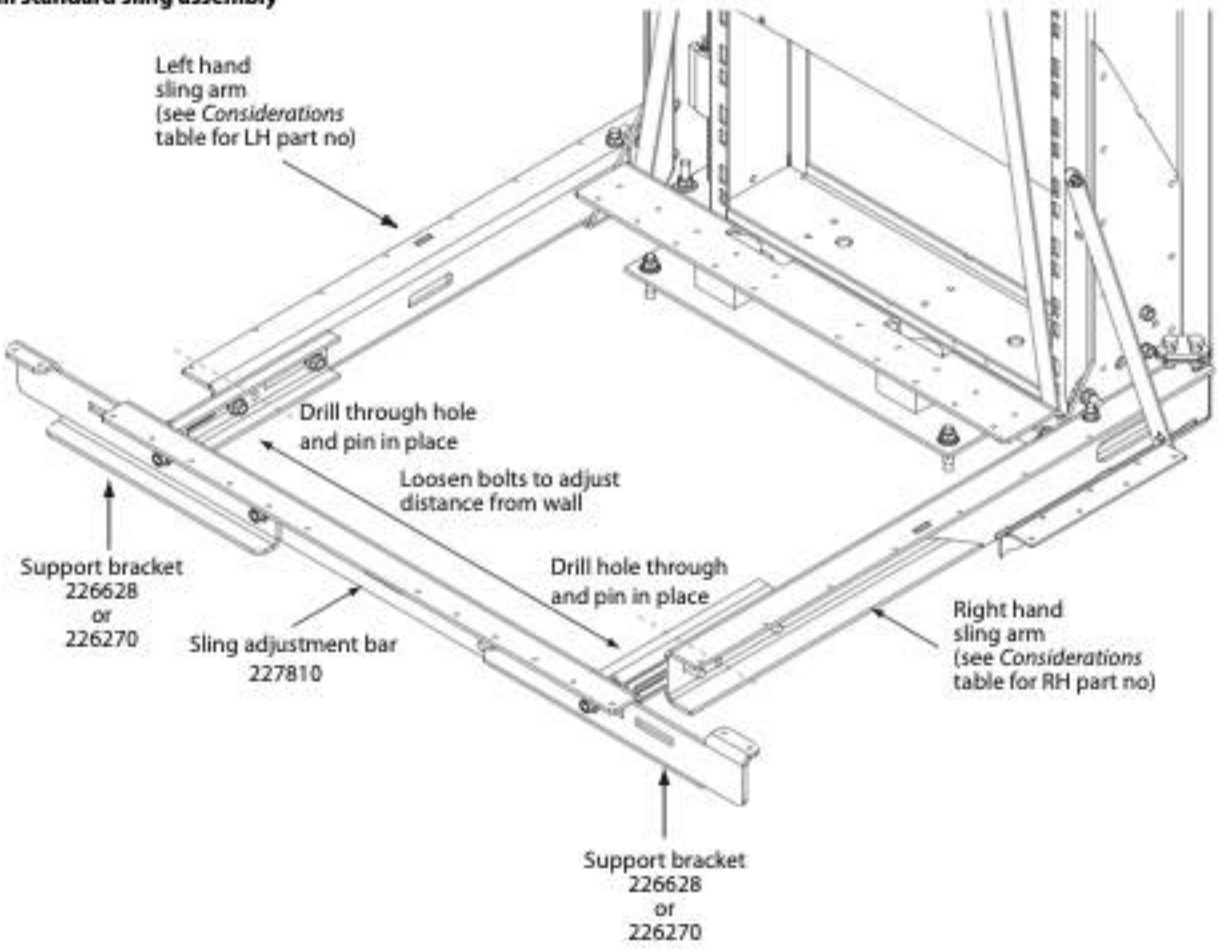

Considerations

The following table identifies the sling arm part numbers which vary in length depending on the width of the cab.

If cab width...	Then sling arm part no...
33.75" to 44.75"	227141 left and right
22.75" to 33.75"	227571 left and right
44.75" to 55.75"	227574 left and right
55.75" and larger	227577 left and right

Procedure

1 Assemble the left hand sling arm part no. 227141 (LH) and the right hand sling arm part no. 227141 (RH).

NOTE

If the sling is not up off the pit floor, you'll need to lift it about six inches to insert the 1x$\frac{1}{2}$" by 4$\frac{1}{2}$" bolt from the bottom.

Figure 44
Left hand sling arm attachment to base

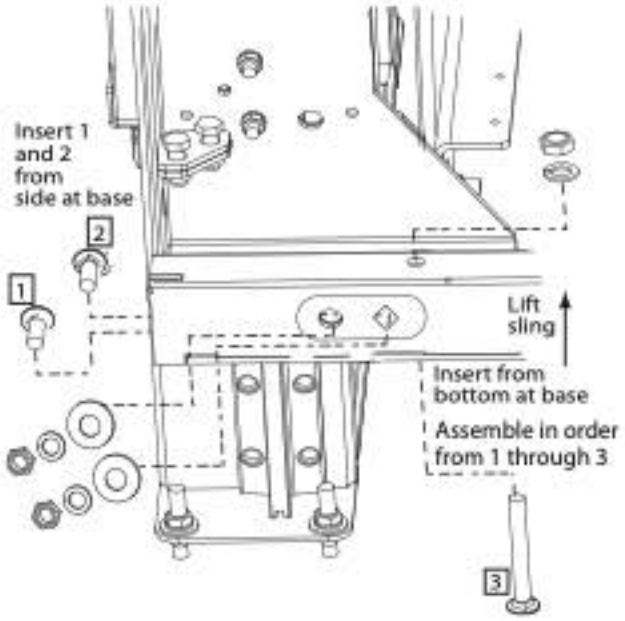

Attach with pre pack C5290150 (was 227013)

1) 1 x ⅛" - 13 x 1½" hex head bolts 1 x ⅛" lock washer 1 x ⅛" nut 3) 1 x ⅛" x 4½" carriage bolt	2) 1 x ⅛" - 13 x 1½" carriage bolts 1 x ⅛" lock washer 1 x ⅛" nut

2 Assemble the front sling adjustment bar part no. 227810 to both the left hand and right hand sling arms.
The adjustable arms are welded to the front sling bar.

3 Add shim if necessary.

Figure 45
Sling adjustment bar to left hand sling arm

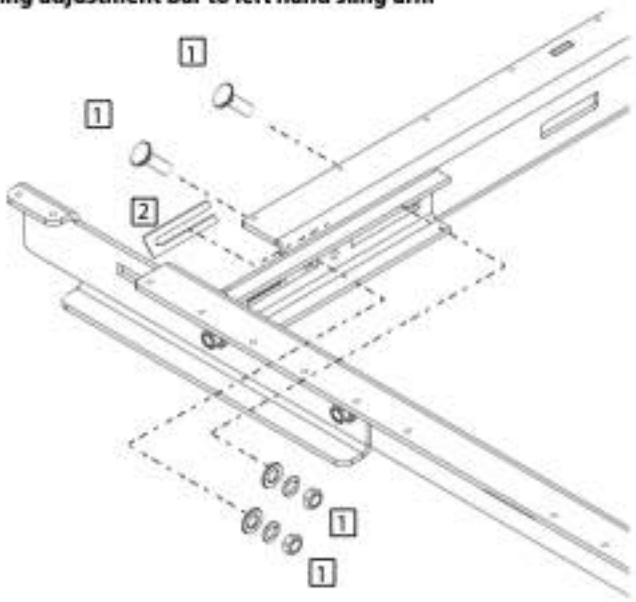

Attach with pre pack C5290150 (was 227013)

1) 2 x ⅛" x 13 x 1½" carriage bolts 2 x ⅛" flat washers 2) shim part no. 227808	1) 2 x ⅛" lock washers 2 x ⅛" nuts

4 Assemble the support brackets to the sling adjustment bar.

NOTE

All cabs include either left or right support brackets 226628. If you have only one support bracket, install it on the gate opening side. If you have two openings, install brackets on both the left and right hand sides. If you have a cab larger than 54", but only have one opening, you'll have two support brackets; install them on either side. If the same part is used on both sides, flip the bracket to install it on the opposite side.

Figure 46
Bracket support

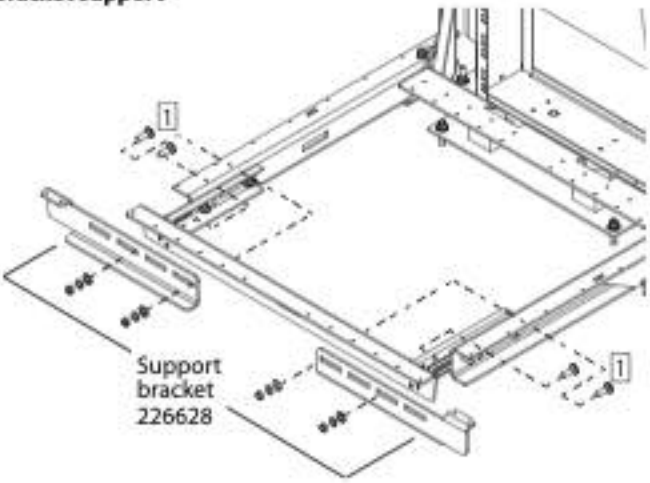

Attach each bracket with pre pack C5290150 (was 227013)

1) 2 x ⅛" x 13 x 1½" carriage bolts 2 x ⅛" flat washers	1) 2 x ⅛" lock washers 2 x ⅛" nuts

5 Level the sling.
Ensure the sling is level side to side.

6 Ensure the sling adjustment bar is completely level and has been adjusted to its final position.

7 Drill through the pre-drilled holes in the arms on the sling adjustment bar and out through the left and right sling arms.

8 Insert a pin through these holes to secure the sling adjustment bar in place and keep it from sagging.

HEAVY DUTY (HD) SLING ASSEMBLY

This procedure is for the Heavy Duty (HD) sling. For the Standard sling, refer to the previous procedure in this step.

Figure 47
Full heavy duty (HD) sling assembly

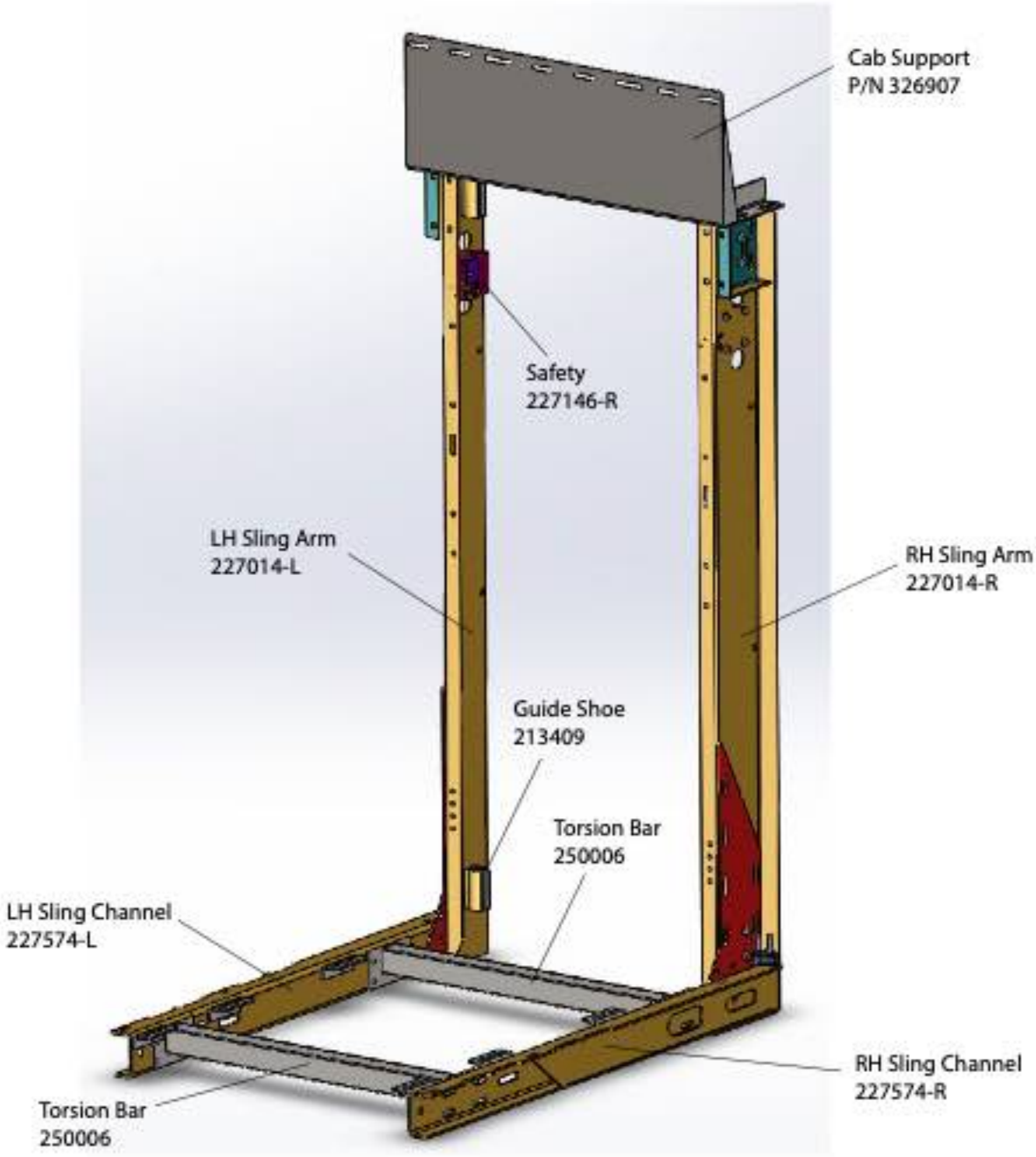

Procedure

1. Assemble the left-hand and right-hand sling arms (227014-L and 227014-R) to the rails using the hardware provided, ensuring the guide shoes (213409) and safeties (227146-R/L) are engaged with the rails.
2. Assemble the left hand sling channel (227574-L) to the left hand sling arm (227014-L) using the hardware provided.
3. Assemble the right-hand sling channel (227574-R) to the right hand sling arm (227014-R) using the hardware provided.
4. Assemble the two torsion bars (250006) between the two sling channels using the hardware provided.
5. Assemble the cab support (326907) to the top of the sling arms using the hardware provided.

Step 15
Chain to counterweight rods

Attach the drive chains to the lifting rods on the traveling counterweight assembly.

Requirements

Ensure that Step 4, Chain and chain guard on page 16 is complete.

Procedure

NOTE

If this is an Eclipse HD (heavy duty), you need to attach the chains as shown in the photos on the next page.

1 Use the pendant to run the chains to the counterweight rods above the counterweight housing.

2 Link each chain to the top of each counterweight threaded rod at the counterweight threaded rod coupling—left chain to left coupling; right chain to right coupling.

Figure 48
Chains to counterweight rods

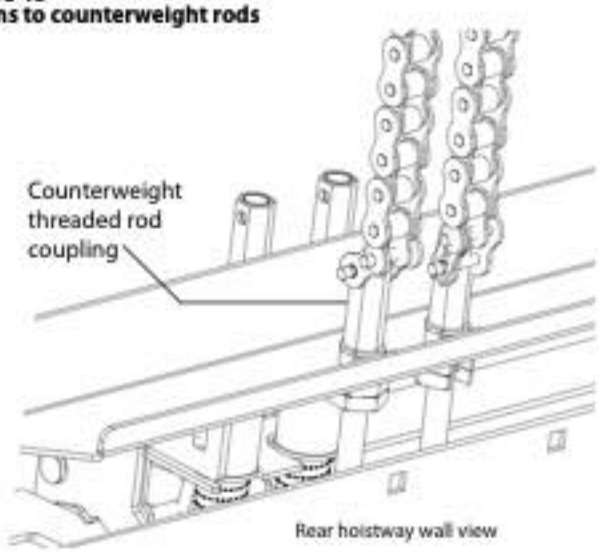

Figure 49
Chain link and safety clip

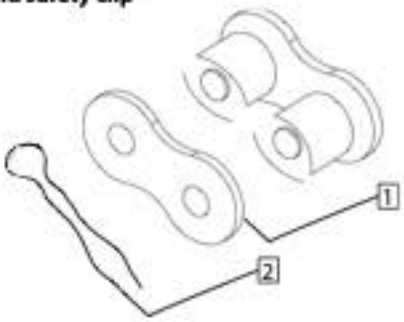

Attach with pre pack 105656

1) 1 x chain link	2) 1 x safety clip

DANGER

Be sure to attach both the chain link AND the safety clip. The safety clip cannot hold the weight of the chain by itself!

3 Due to the offset in the sprockets, one of the threaded rods has to be moved by 3/8" depending on which end of the chain is higher.

4 To adjust the threaded rod, loosen the nuts located at the bottom of the counterweight.

5 The offset of the threaded rod coupling and chains is shown below.

Figure 50
Offset of threaded rod coupling and chains

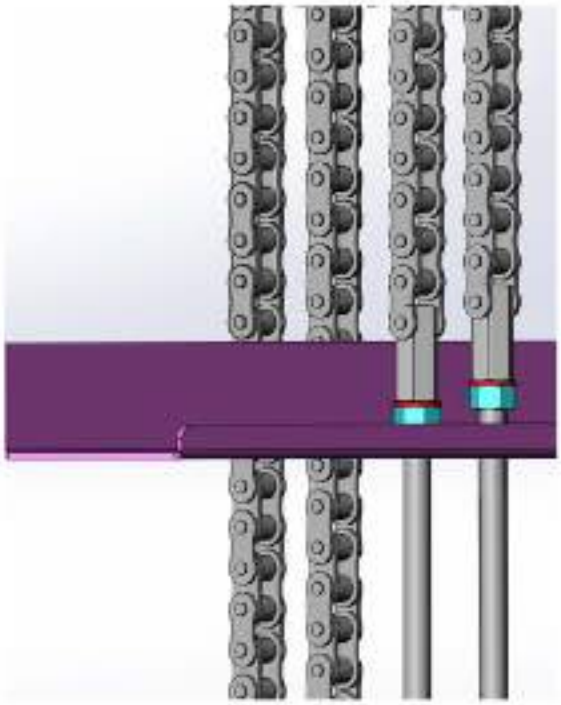

6 Attach split nuts to the counterweight threaded rods.

Figure 51
Split nuts

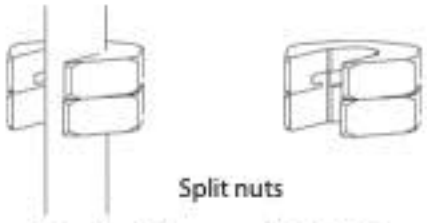

Attach with pre pack 227009

1) 4 x split nuts

Use two split nuts on the top, one for each rod just below the top chain coupling.

Use two split nuts on the bottom, one for each rod just above the top weight.

Figure 52
Split nuts (rear view from hoistway)

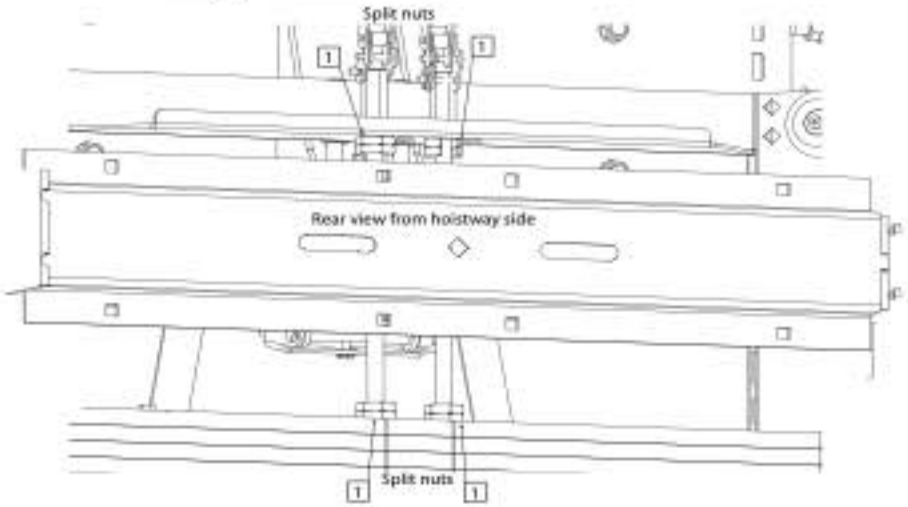

The split nuts help to ensure the counterweight threaded rod nuts remain securely in place.

Skate Adjustment Bolts & Fastening Nuts

7 Tighten the skate adjustment bolts (D) in the front until there is roughly 1/4" of tension on both sets of chains.

Bottom View Shown

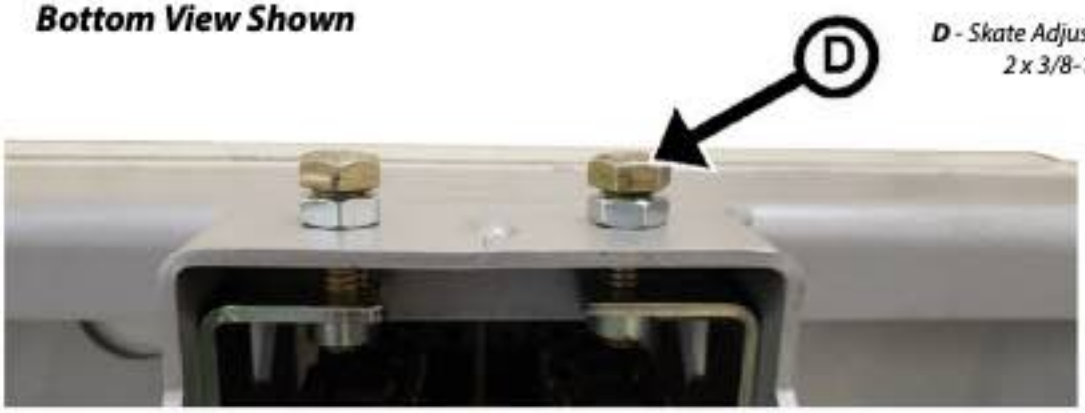

***D** - Skate Adjustment Bolt, 2 x 3/8-16*

8 Tighten the side skate fastening nuts (E) on both sides fully to hold the skates in place.

***E** - Skate Fastening Nut, 4 x 1/4-20*



Inspect Noise Quality and Make Adjustments to Skates

9 Test ride and listen to the noise quality and adjust the skates as required to eliminate the noise and any vibrations.

Chain to counterweight rods for HD unit

For the Eclipse Heavy Duty (HD) unit, attach the chains to the counterweight rods as shown in the photos below.

IMPORTANT

You must attach the extra link to the chain and rod as shown below. You cannot attach the link to the chain first and then try to connect the chain to the rod.

Figure 53
Chains to counterweight rods (HD unit)

STEP 1



STEP 2



STEP 3



DANGER

Be sure to attach both the chain link AND the safety clip. The safety clip cannot hold the weight of the chain by itself!

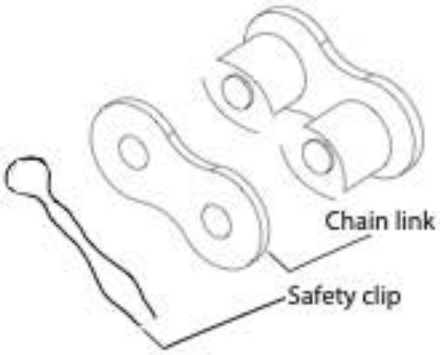

Step 16
Chains to lifting bracket assembly

Connect the chains to the lifting bracket on the sling.

Procedure

1 Use the pendant to run the chains to the lifting bracket.
The counterweight traveling assembly with weights rises.

NOTE

If the motor is not running in the correct direction in relation to the pendant commands, switch any two of the motor wires — black with blue or red with blue.

⚠ DANGER

If you decide instead to manually raise the sling towards the unattached chains to minimize chain travel to the lifting bracket, be sure to attach the shoring bracket to the rails and tie off the sling/weights so that neither the sling nor the weights can move during chain attachment.

2 If necessary, remove the chain safety bracket on the motor and adjust the motor sprocket horizontally so the chain is horizontally aligned with the lifting bracket coupling nuts.
There are two Allen set screws on each motor sprocket that allow you to loosen the sprocket. To adjust, move each sprocket horizontally along the motor shaft and then tighten the set screw.

NOTE

Usually the motor sprocket horizontal alignment is set and does not require adjustment.

Figure 54
Motor sprockets

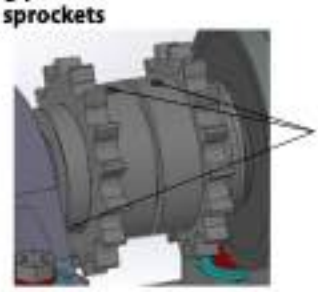

Figure 55
Sprocket alignment

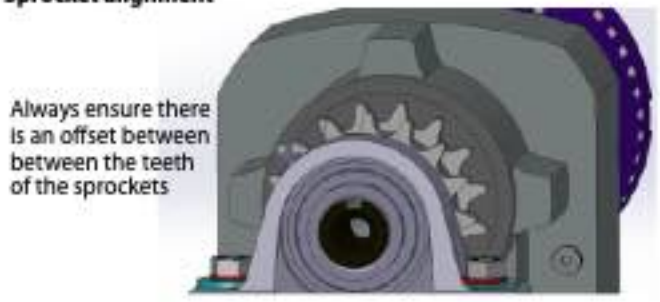

⚠ DANGER

Once the sling is attached to the traveling counterweight housing, it is light. Therefore, the sling can move upwards at any time before full cab assembly, while the weights can fall downwards. Stay clear of the rails!

3 Move up one of the lifting bracket threaded rod couplings by 3/8". Tighten the nuts with tension on both chains until the tension is even.

Figure 56
Lifting bracket threaded rod coupling

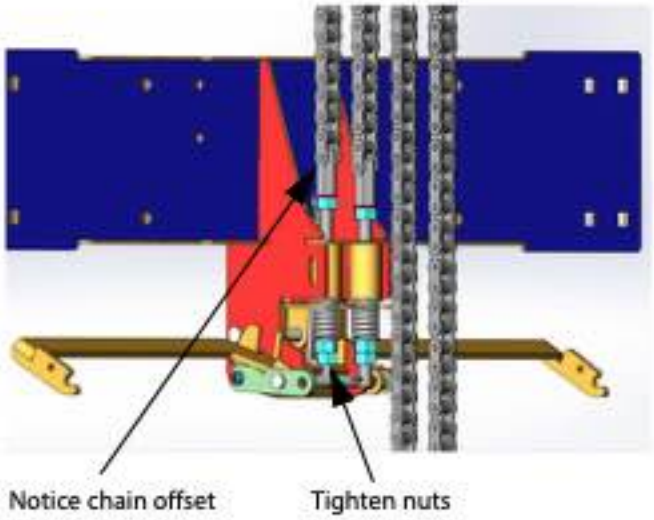

4 Link each chain to the top of each lifting bracket threaded rod coupling.

Figure 57
Chain link and safety clip

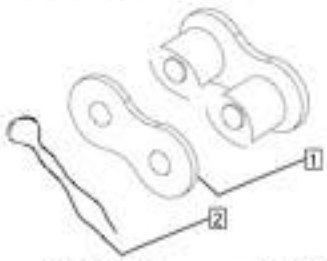

Attach with pre pack 105656

1) 1 x chain link	2) 1 x safety clip

Figure 58
Chains to lifting bracket

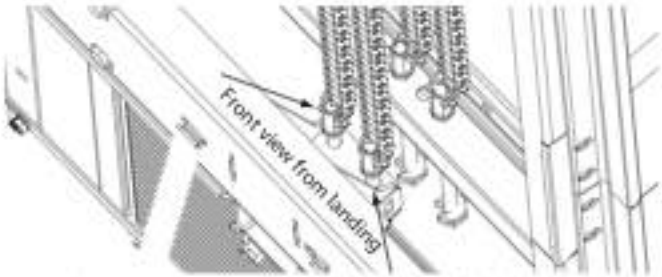

5 When complete, use the pendant to lift the sling.

Step 17
Cab floor attachment

Attach the cab floor (platform).

Considerations

Secure the cab floor to the sling with #10 x ¾" wood screws that do not pierce the floor. During cab wall assembly, you'll attach longer screws, #8 x 1 ½" through the floor and into the cab walls to add cab wall support.

Procedure

1 Use the pendant to lift the sling so you can work underneath.

⚠ DANGER

Use the shoring bracket to prevent the sling from falling!

2 Level the sling, ensuring it is level side to side as well.
3 Place the cab floor on the sling arms.
4 Measure the clear opening based on the following guidelines:
- The clearance between the hoistway side of the landing door and the edge of the landing sill shall not exceed 0.75" (swing doors) and 2.25" (sliding doors).
- The distance between the hoistway face of the landing door or gate and the car door or gate shall not exceed 4".
- The elevator design is with a maximum 1.25" running clearance.

5 Ensure the floor is level from side to side.
6 Assemble the cab floor to the sling from underneath.
Attach with #10 x ¾" wood screws.
The screws attach from underneath all four sides of the floor.

Figure 59
Cab floor assembly

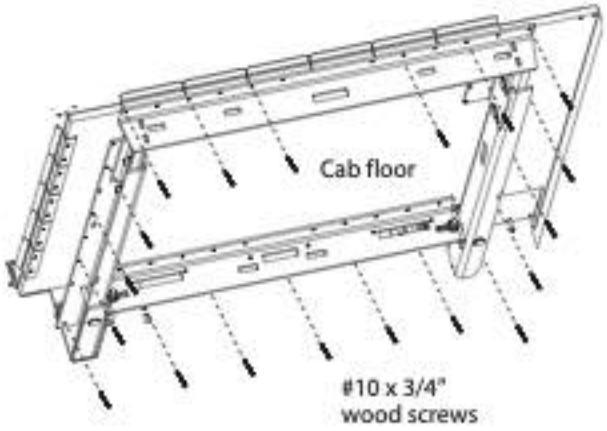

Attach with pre pack 105286

1) 30 x #10 x ¾" wood screws

Figure 60
Floor running clearances

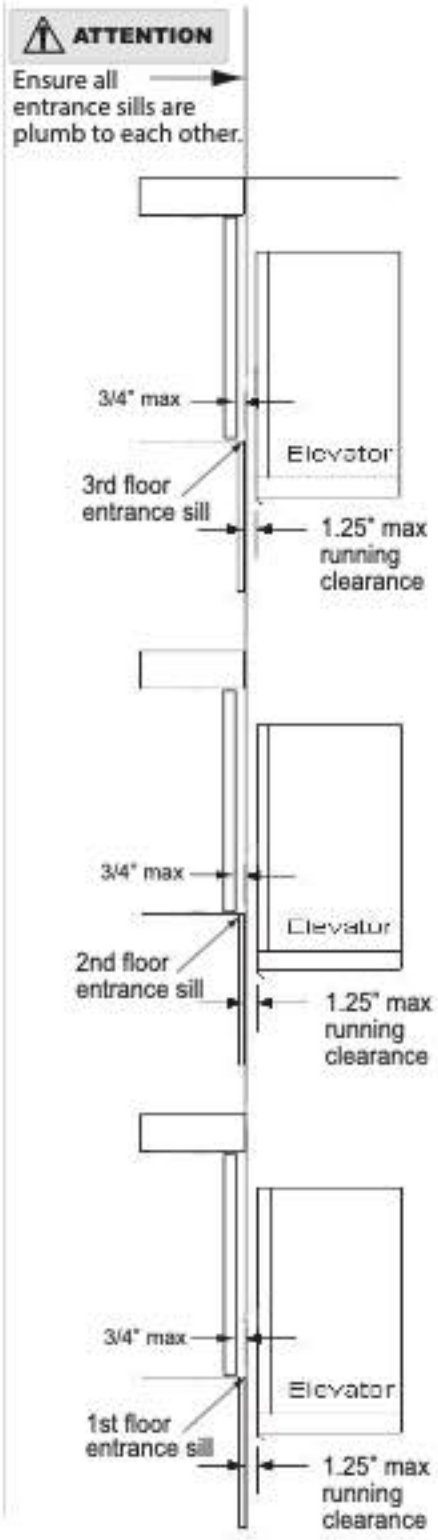

Step 18
Tape and tape reader (selector)

Install the tape and tape reader (selector).

Procedure

NOTE

The tape and tape reader must always be installed on the right-hand side.

1 Attach the top of the tape to the top shoring bracket as shown using one bolt, lockwasher and nut.

Figure 61
Attach tape at top

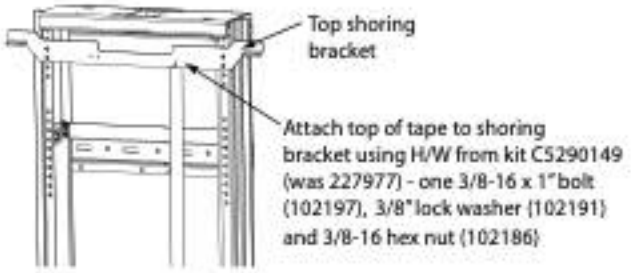

2 Attach the tape tensioner bracket at the bottom of the rails as shown.

3 Attach the bottom of the tape to the tape tensioner assembly using two bolts, lockwashers and nuts.

Figure 62
Attach tape at bottom

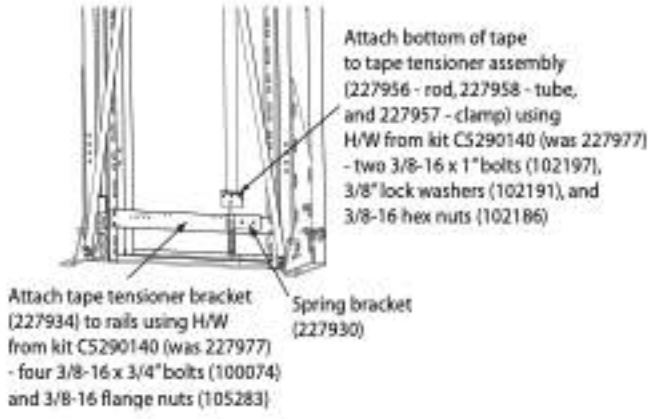

4 Install the tape reader (selector) as shown on the next pages.

5 Once the car top box has been installed (see STEP 27), you can connect the cable from J6A on the tape reader selector PCB to J6 on the car top board.

Figure 63
Tape reader assembly

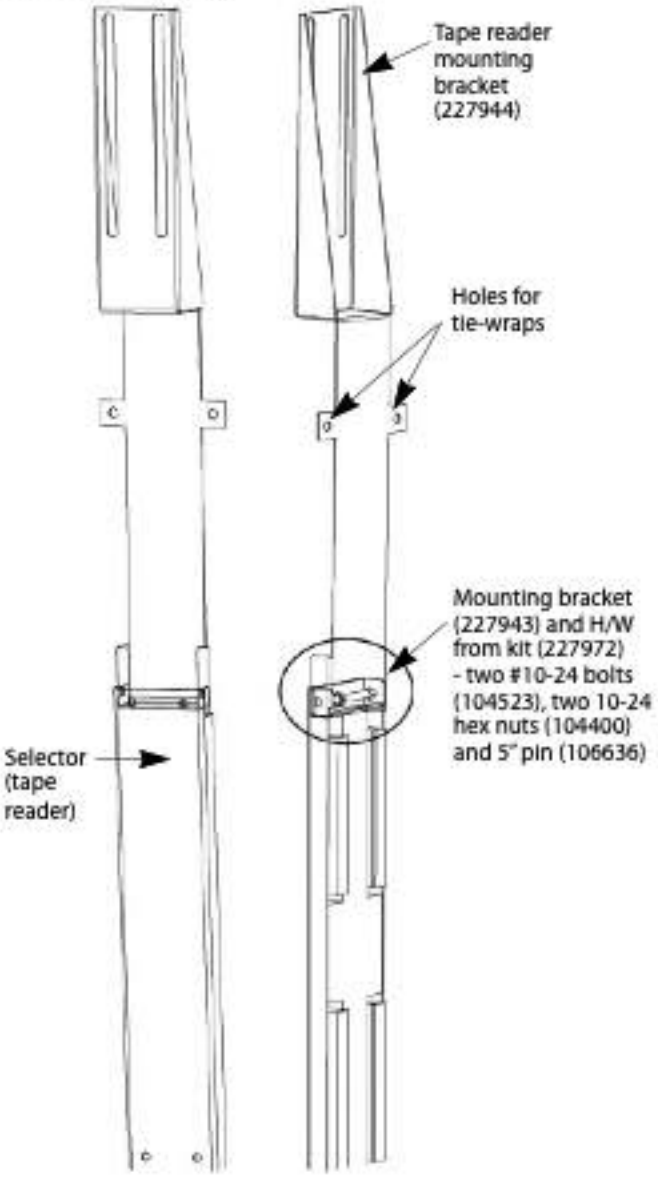

⚠ WARNING

Ensure the tape reader mounting bracket is not installed too close to the tripping bar. If it is installed too close, the tripping bar cannot turn to set the safeties.

Figure 64
Install tape reader





Top cam shown here. Clamp top and bottom cams (227960) onto tape using clamps (227961) and H/W in cam box.



Bottom cam shown here.

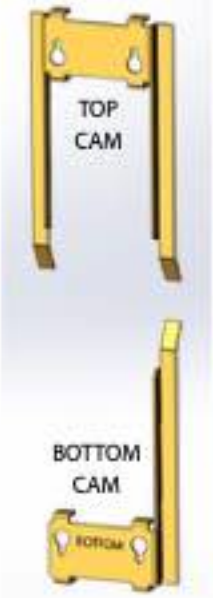



Install temporary cab ceiling bracket (226093-D) and then attach tape reader mounting bracket (227944) to it using H/W from kit C5290149 (was 227977) - two 1/2-13 x 1-1/2" bolts (102200), 1/2" flat washers (102189), 1/2" lock washers (102193) and 1/2-13 hex nuts (101106). **When assembling the cab, be sure to remove this temporary bracket and install the permanent cab ceiling bracket (226093).**



WARNING
Ensure the tape reader mounting bracket is not installed too close to the tripping bar. If it is too close, the tripping bar cannot turn to set the safeties.



Attach tape reader assembly to tape reader mounting bracket (227944) using mounting bracket (227943) and H/W from kit (227972) - two #10-24 bolts (104523), two 10-24 hex nuts (104400) and 5" pin (106636).

Figure 65
Standard tape reader (40 ft/min) assembly and cams

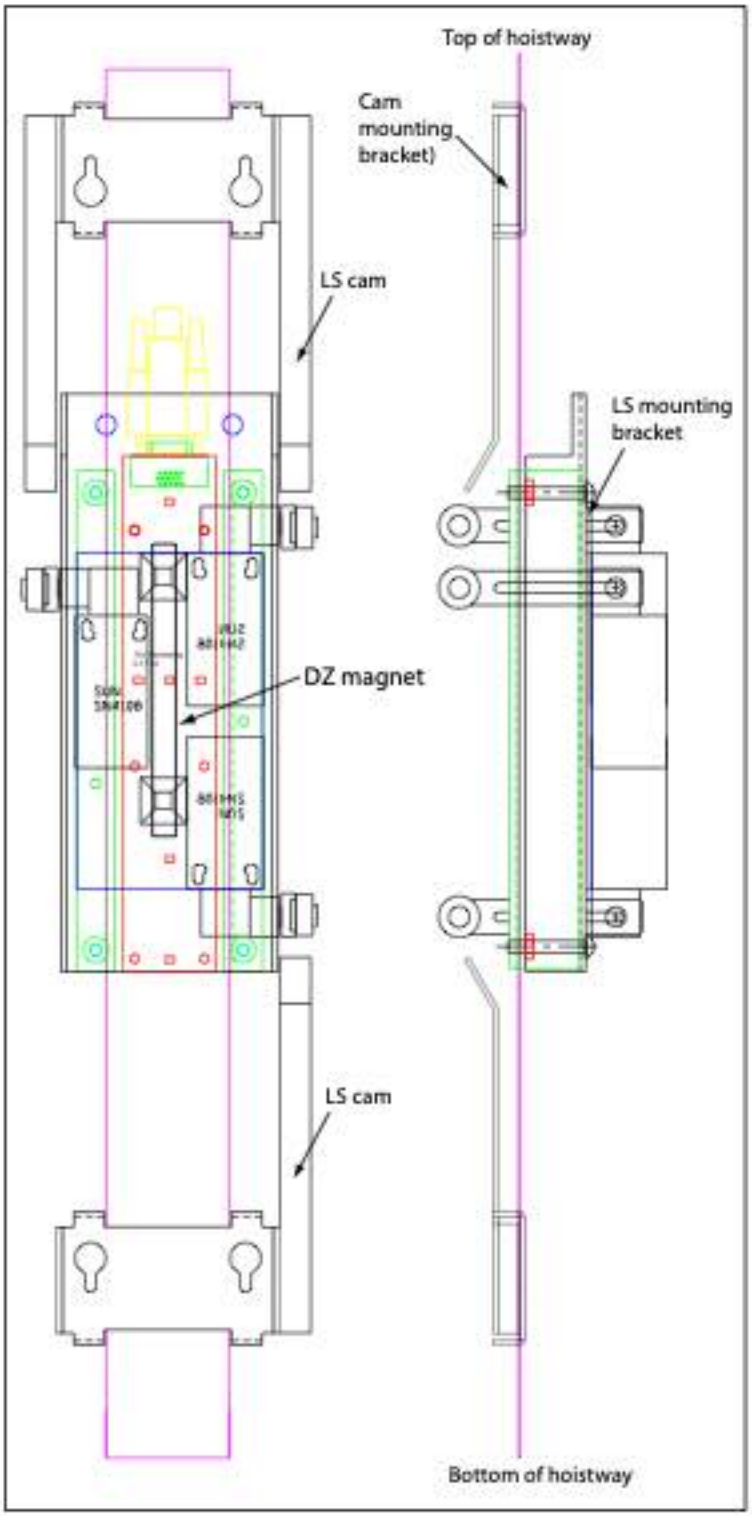

Figure 66
Long tape reader (60 ft/min) assembly and cams

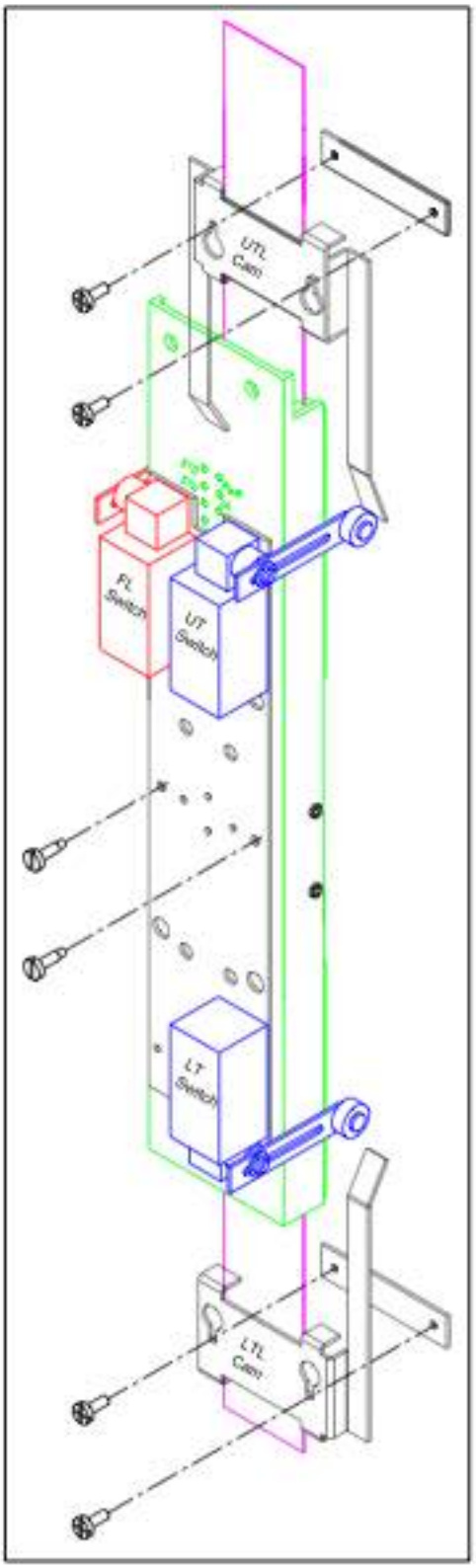

6 Figure 66 from the previous page is repeated on the right to help illustrate proper placement of the cams (steps 7 through 15 below).

7 **Be careful with the lower terminal limit (LTL) cam placement.**



8 You must locate the lower terminal U-shaped cam so that it pushes the lower terminal limit (LTL) switch as the lift travels below the lower landing.

9 The LTL switch is on the lower right side of selector.

10 The selector lights are on the car top junction board and duplicates are on the upper left side of the main controller board.

11 The ideal sequence is that as the lift approaches the lower landing the DL (down level) light comes on first.

12 Then the DZ (door zone) and P1 (position 1) lights come on as the DL light goes off. Floor level is when DZ and P1 lights only are on.

13 As the lift continues down, the UL (up level) light comes on the main controller board to indicate the lift is below the floor. This is the point of travel (approximately 1 inch below the bottom floor) that the LTL switch should be depressed.

14 As the LTL switch is pressed, the LT light next to TC5 on the main controller board should go OFF and the TC27 light on the upper right of the board should come on. This LT off and TC27 on is the reset signal to the controller and it should run in slow speed back up to floor level once reset.

15 The upper terminal limit (UTL) cam should push the upper terminal limit (UTL) switch as the lift runs past the top floor.

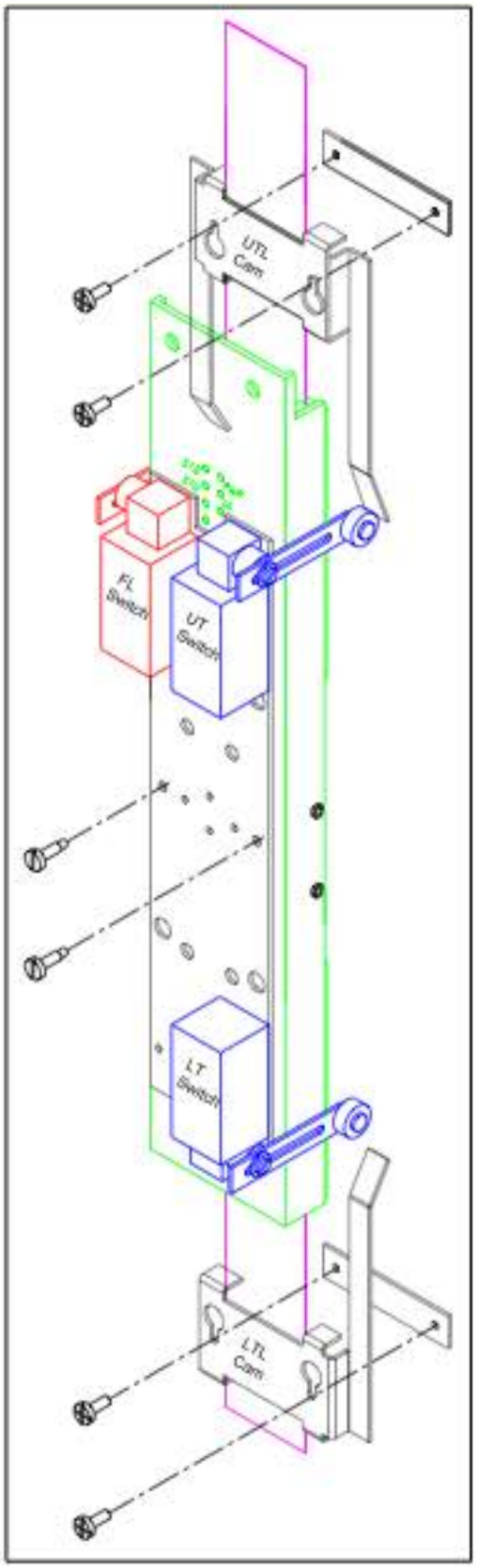

16 For the standard tape reader, use the Micro-6 magnet template part no. 227923 (shown at the right) to assist in placing the magnets on the tape. See the magnet configurations below.

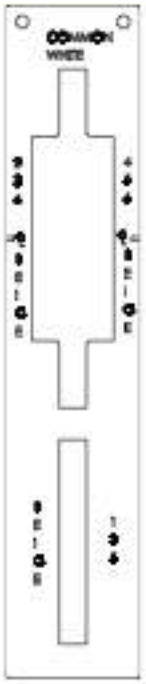

NOTE

If you are placing the magnets while using either the P-Tool or the temporary run buttons, you must unplug the cable from J10 on the controller board. Don't forget to plug it back in before running the lift in normal mode.

Figure 67
Selector magnet configurations

savaria

Micro-6 Selector Magnet Configuration

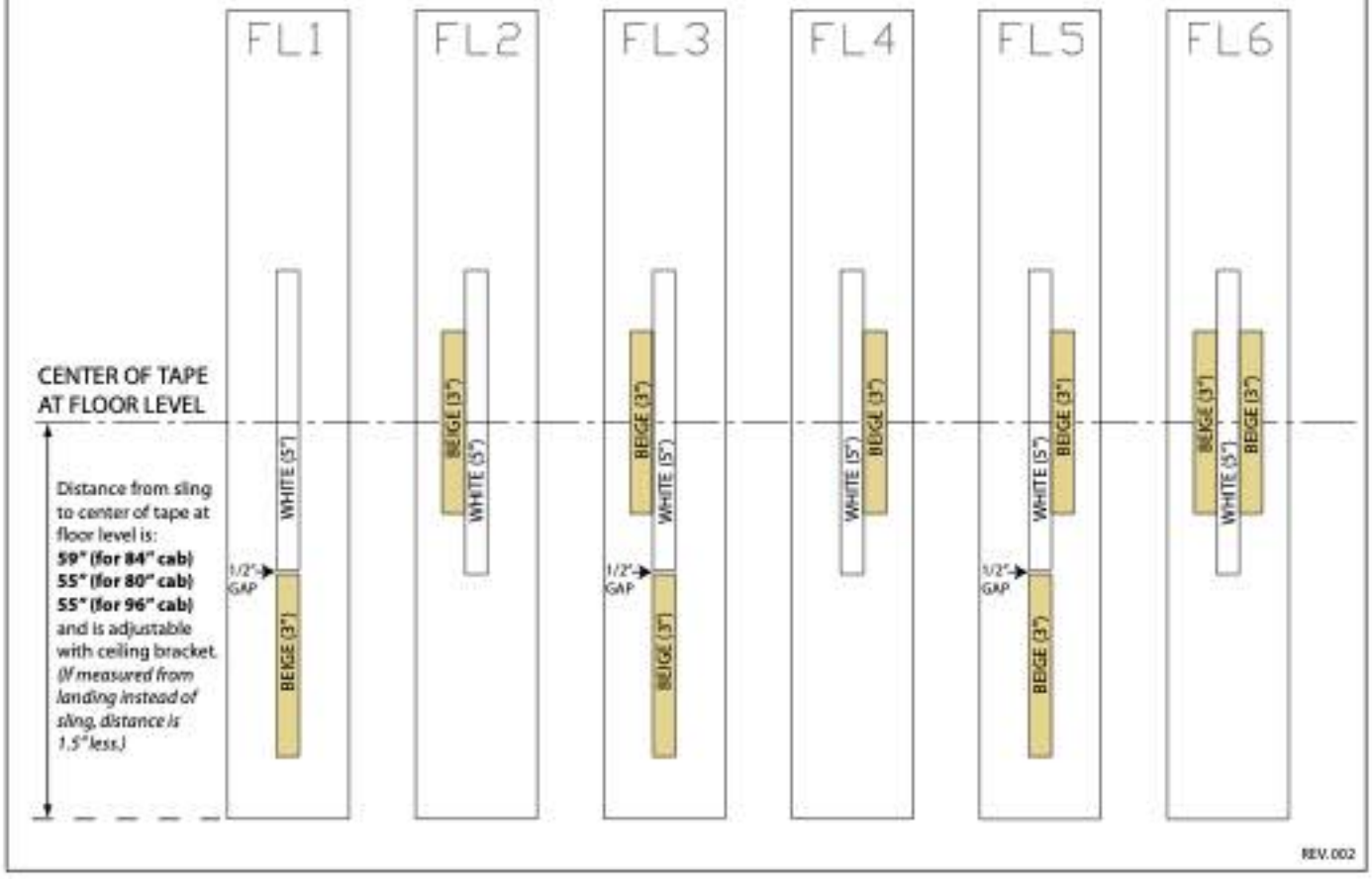

For the longer tape reader, use the Micro-6 Selector 2 magnet template part no. 227923-HS (shown below) to assist in placing the magnets on the tape. See the magnet configuration below.

Figure 66a
Micro-6 Selector 2 magnet configuration

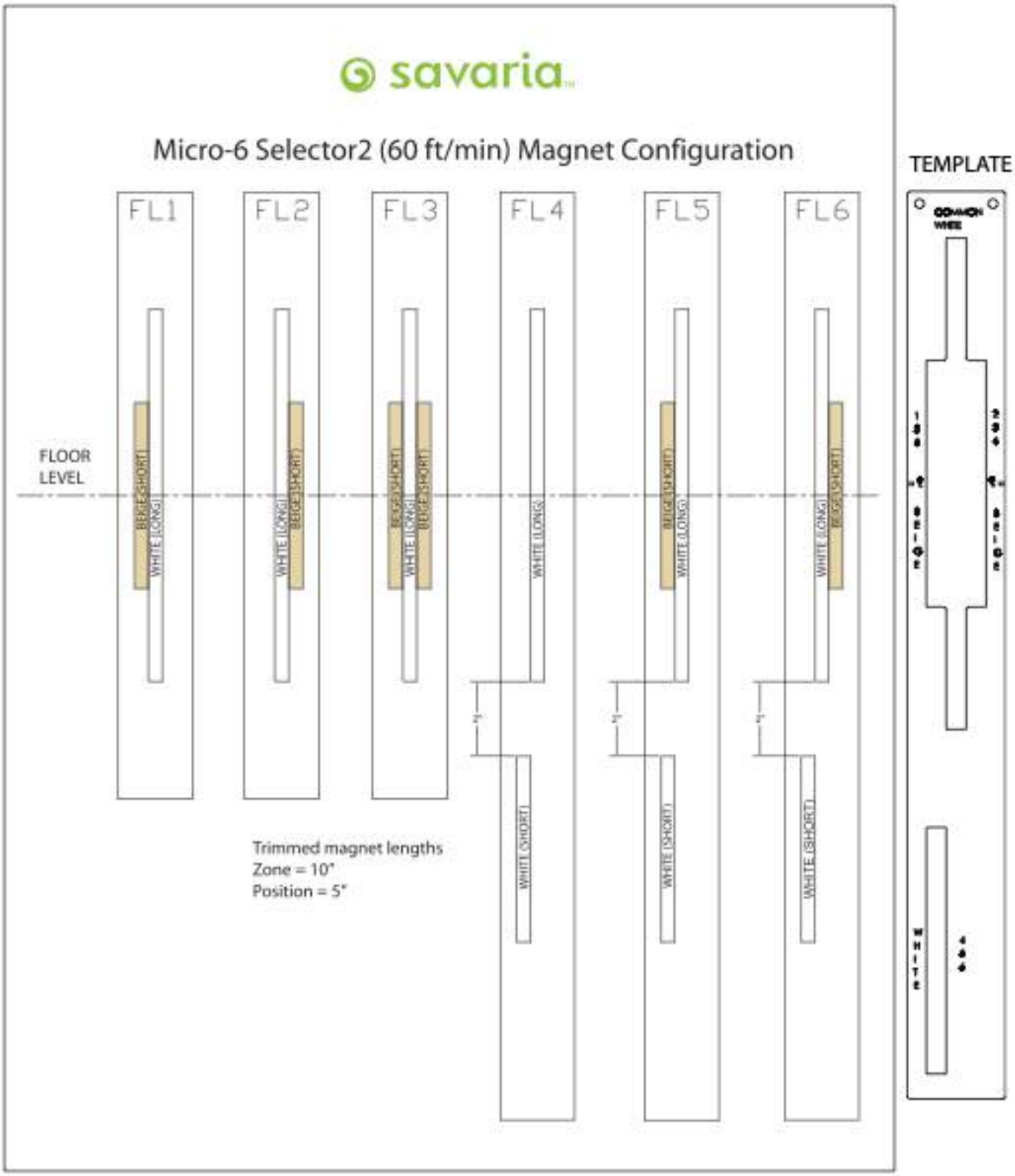

Figure 68
Selector PCB layout



Figure 69
Sensor spacing (40 ft/min and 60 ft/min)

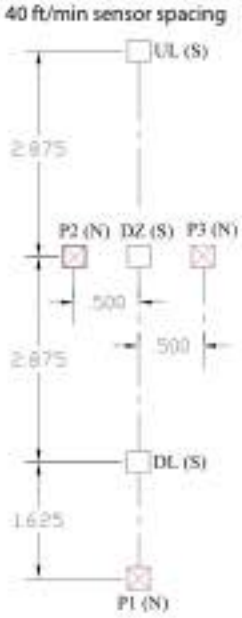

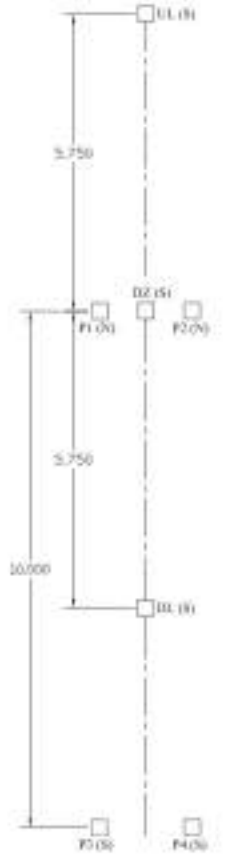

In the illustration above:

- P1 = Positioning binary 1's lane
- P2 = Positioning binary 2's lane
- P3 = Positioning binary 4's lane

Step 19
End of travel switches

Attach the harness for the end of travel switches.

Considerations

The end of travel (EOT) switches stop the motor if the sling or counterweight pass the final limits.

There is an EOT switch on the top shoring bracket (activated by the sling) and an EOT switch on the chain guide assembly (activated by the counterweight). Each switch is pre-assembled.

Procedure

1 Wire the top shoring bracket EOT switch and the chain guide EOT switch in series to each other, and to FL6 on the main controller board with part no. 227244.

Figure 70
Wiring for end of travel switches

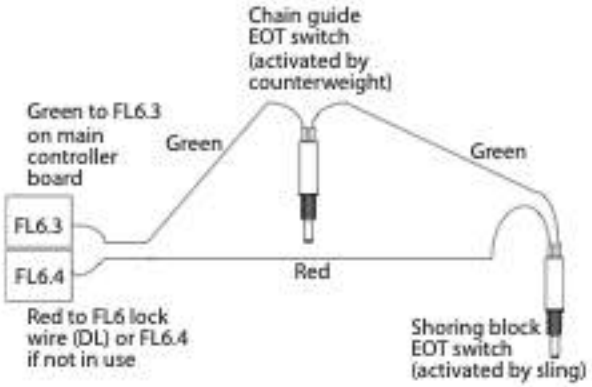

Step 20
Slack chain (plank) switch test

Ensure the slack chain switch engages the safeties.

Considerations

When the unit ships, the slack chain (plank) switch is assembled to the sling assembly as shown below.

Figure 71
Slack chain (safety) switch mounted on sling

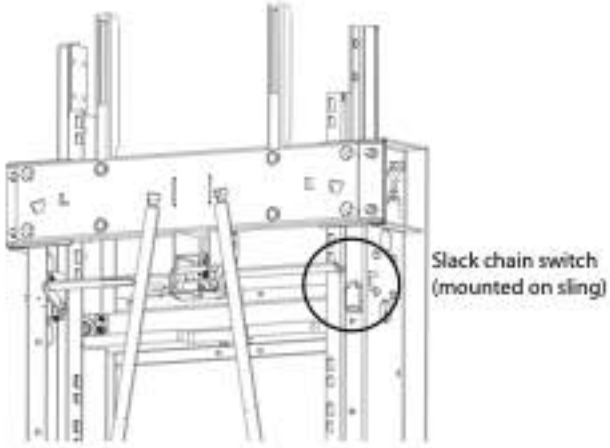



Switch pulled
out for run



Switch pushed
in for stop

⚠ WARNING

To reset the manual-resetting switch on site, you'll need to reach with your left hand through the control wall cutout to the upper right corner of the sling. Grab the switch head with your thumb and index finger and pull it out to reset. Once the switch is reset, if all the doors, gates and safety string are intact, the elevator will automatically run in the down direction below the bottom floor to reset itself on the lower terminal switch.

Ensure the bell crank spring assembly hex nuts allow the safety springs to engage the slack chain (plank) switch during a slack chain event or chain failure.

The following list identifies the order of assembly:

1) Spring	4) Washer
2) Washer	5) 2 X hex nut
3) Spring	6) Cotter pin

⚠ CAUTION

The spring tension is set during factory assembly. As a precaution, verify the nuts are snug to each other to ensure spring tension is maintained.

Figure 72
Bell crank spring assembly nuts

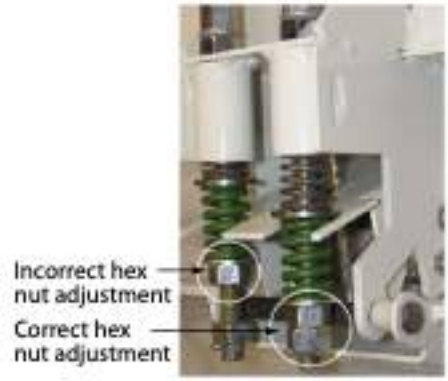

1 Turn on power and use the pendant to lift the sling approximately 8' from the pit.

2 Place the bottom shoring bracket underneath the floor to stop the sling from moving downwards.

Use the pendant to lower the sling onto the shoring bracket until the chain is slack.

Figure 73
Safeties off

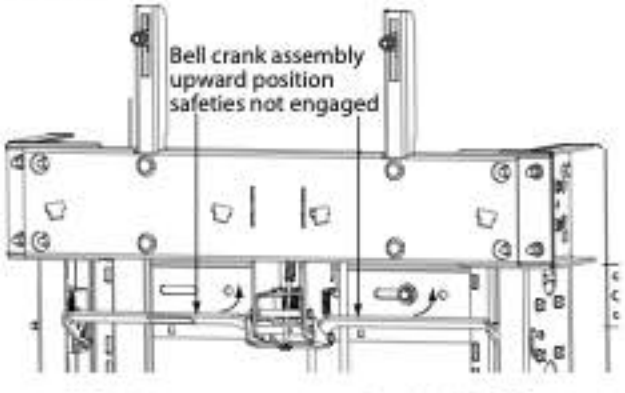

The slack chain allows the bell crank to move; the bell crank springs decompress; the assembly engages the slack chain switch which turns off power; the safeties engage.

Figure 74
Safeties on

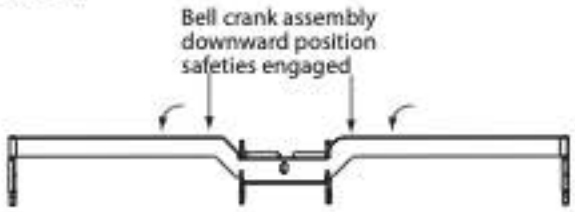

NOTE

During regular operation, the safeties only engage during a slack chain event or a chain failure. Once the chain has tension again, the safeties automatically disengage.

3 Raise the sling to release the safeties.

NOTE

Ensure the whole mechanism returns all of the way upward when resetting the safeties.

4 Remove the shoring bracket from underneath the sling.

NOTE

If the safeties do not engage, tighten the nuts to add spring tension.

Step 21
Installation of Savaria type "A" Speed Arrestor

Install the Speed Arrestor.

NOTE

To perform a Spin Test of the Speed Arrestor, follow the procedure in Appendix G

Procedure

1 Verify proper installation of the Speed Arrestor sling bracket.

a. Ensure the rotating plate on the Speed Arrestor is resting against the front stop bracket as shown below.

NOTE

The position of this stop determines the stopping speed of the Speed Arrestor, so it is vital.

b. If the plate does not sit against the stop bracket, review the installation or contact technical support for assistance.

Figure 75
OSG rotating plate against front stop

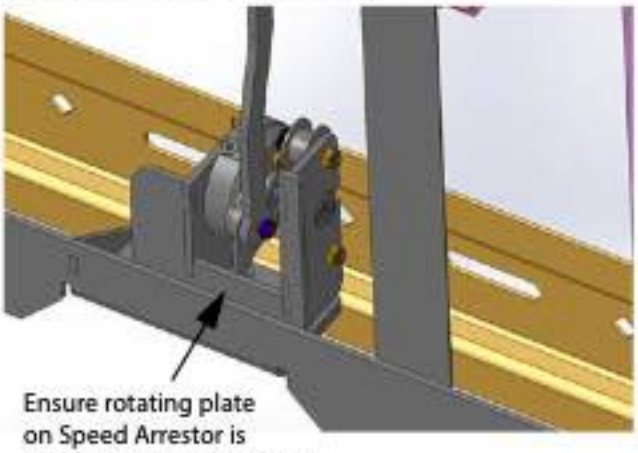

c. The lock nuts that hold the extension arm should never be tightened fully but be within a 1/2 turn of fully tight.

Figure 76
Lock nuts connecting extension arm

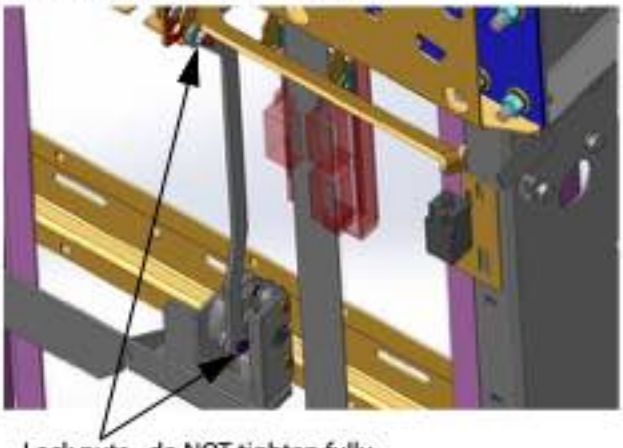

d. Confirm the Speed Arrestor moves freely (small movement rotating back and forth).

e. Confirm that the Speed Arrestor moves the safety brakes properly.

2 Install the tensioner assembly as shown in the images below. Use the two holes available in the tape reader bracket and the hardware provided.

- 2x hex head bolt 1/4"-20 x 1"
- 2x flat washer 1/4"
- 2x lock washer 1/4"
- 2x nut 1/4"-20

Figure 77
Tensioner assembly - view from cab side



Figure 78
Tensioner assembly - view from behind tower

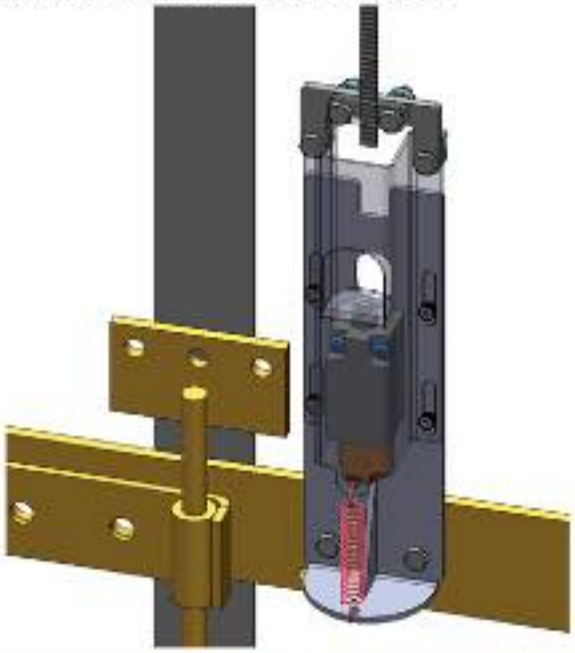

NOTE

Attach the spring to housing by pulling up on the spring, and clamping the belt to housing. Ensure the cam in housing sits 1/2 inch above the Speed Arrestor belt monitor switch.

3 Attach the spacer, belt and clamp to the top shoring bracket as shown below. Ensure the belt teeth are facing TOWARDS the cab. Use the hardware provided.

- 2x hex head bolt 1/4-20x1-1/2"
- 2x flat washer 1/4"
- 2x lock washer 1/4"
- 2x nut 1/4"-20

Figure 79
Spacer, belt and clamp

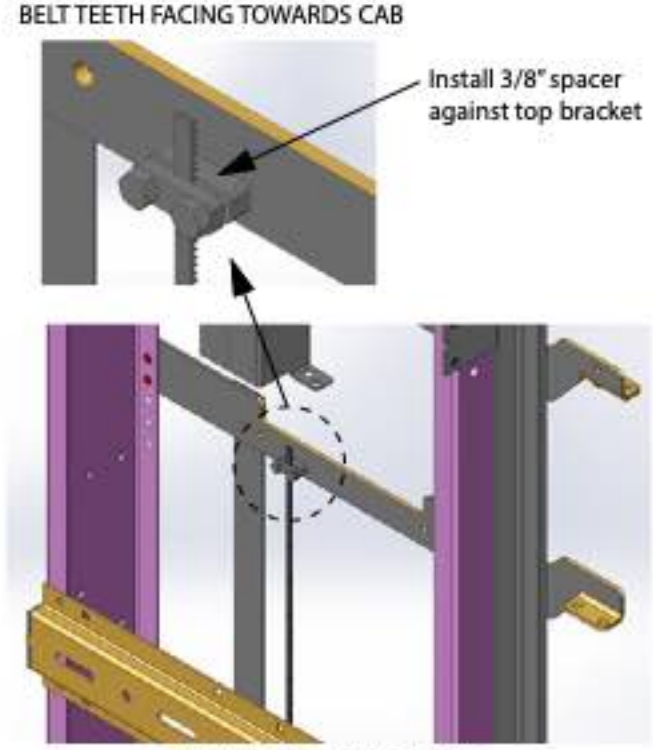

4 Run the belt through the pulleys and Speed Arrestor as shown below.

Figure 80
Belt through pulleys and speed arrestor

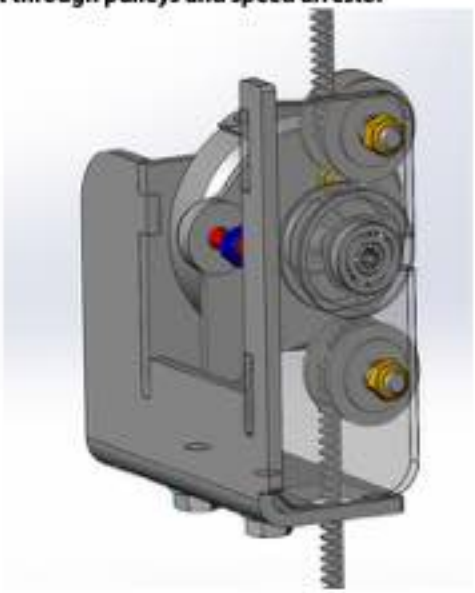

5 Run the belt through the tensioner and adjust the tensioner assembly as needed to ensure proper tensioning of the belt.

a. Pull up on the front piece of the assembly to stretch the spring and pull down on the belt to tension it.

b. Once proper tensioning of the belt is achieved, tighten the 2 clamp bolts to secure the assembly and belt in place.

c. Ensure the slide is at the top of its slots for maximum spring tension.

NOTE

Belt tension is very important to ensure the overspeed trips as needed.

NOTE

Ensure the belt teeth are facing the cab along the full length of its travel. If there are any twists in the belt, the overspeed will not work.

Figure 81
Belt through tensioner assembly

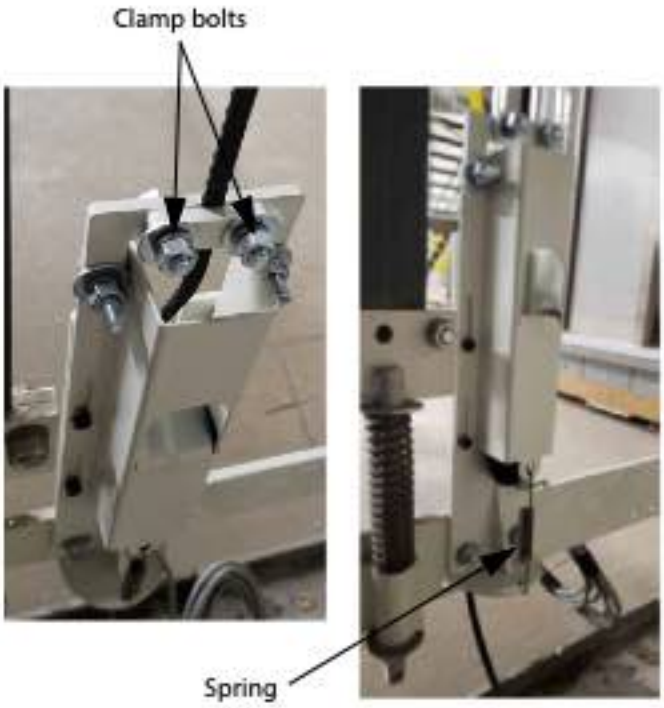

6 Wire the belt monitor switch in series with the pit switch as shown in the Electrical Schematics shipped with the elevator.

7 Verify that the slack chain switch engages allowing activation of the safety switches. If the switch is too high, it will be triggered but it will not allow the activation of the safety brakes on the rails.

Figure 82
Slack chain switch

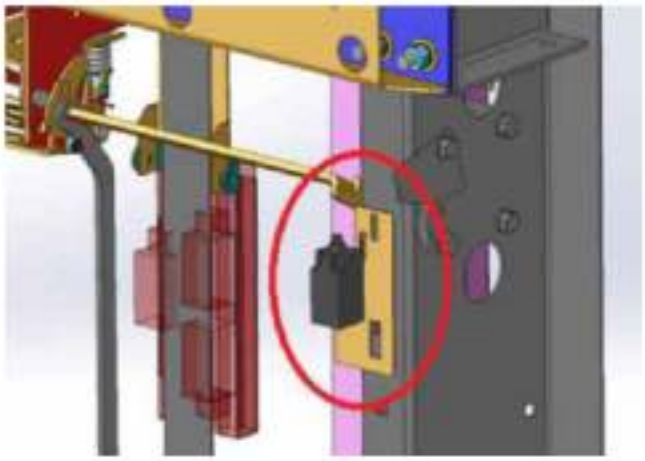

INSPECTION NOTE

Savaria Speed Arrestor are set and sealed at the factory per 2.18.3
If the local Authority Having Jurisdiction requires site verification during initial or periodic inspection it shall be done with a spin test based on requirements of A17.2 part 2.13.2 as modified for Private Residence Elevator application permitted by ASME A17.1 interpretation 19-2665 (see spin test guide in Appendix G)
Testing of governor application shall be done as specified in ASME A17.1 part *8.10.2.2.2(ii)(2)(-a)* by manually tripping the system at the rated speed and no load in the car.

Procedure to reset the Eclipse Speed Arrestor

1 Locate the unit, and if it is safe to do so, enter the cab.

NOTE

If the unit is not safe to enter, the contact Savaria Technical Support for assistance.

2 Removed the COP and set it carefully aside



3 Reset the speed arrestor by rotating the assembly so that the top moves towards you. Once reset, the gear should move freely and not lock in either direction.

NOTE

If in California, New Jersey, or Oregon, make sure you reset the switch manually. In other areas, please refer to your local code.

4 Reset the slack chain switch by pulling the head of the switch up manually.

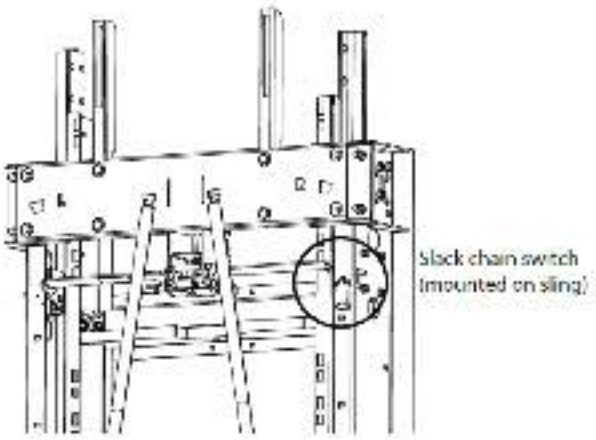

5 Replace the COP and reset the unit to place it back in service

Step 22
Install floor zone switches and cam

Install the floor zone switches at the landings and the cam on the sling.

Procedure

1 Turn off power to the elevator.

2 Remove the 4 screws from the floor zone switch and rotate the switch arm 90 degrees.

Figure 83
Floor zone switch



NOTE: Shown below is an alternate switch that can be used



3 Mount the floor zone cam and bracket on the sling (either left or right side depending on where door locks are located). Ensure the cam is mounted high so you can see it from the top of the car.

Figure 84
Floor zone cam



4 Screw the floor zone switch with bracket to the rail wall.

Figure 85
Floor zone switch on wall



5 Bend the switch arm as needed to clear the rail wall and to ensure proper contact with the cam.

6 Connect the floor zone switch harness to the lock harness.

7 Connect the lock harness to the landing door lock.

Figure 86
Harnesses



Step 23
Interlock installation

Refer to the appropriate *Residential Elevator Lock Installation Guide* for information on how to install a door interlock.

NOTE

Ensure the hoistway door meets the 3/4" & 4" rule as shown in the ASME A17.1 / CSA B44 Code, Section 5.3.1.8.3.
For more information, please consult the *Residential Elevator Lock Installation Guide (3/4&4 Rule), P/N 001286.*

Step 24
Install Reset Switch

1 Open the 2 screws (A) to remove wires from the pre-wired reset switch as shown in the image.

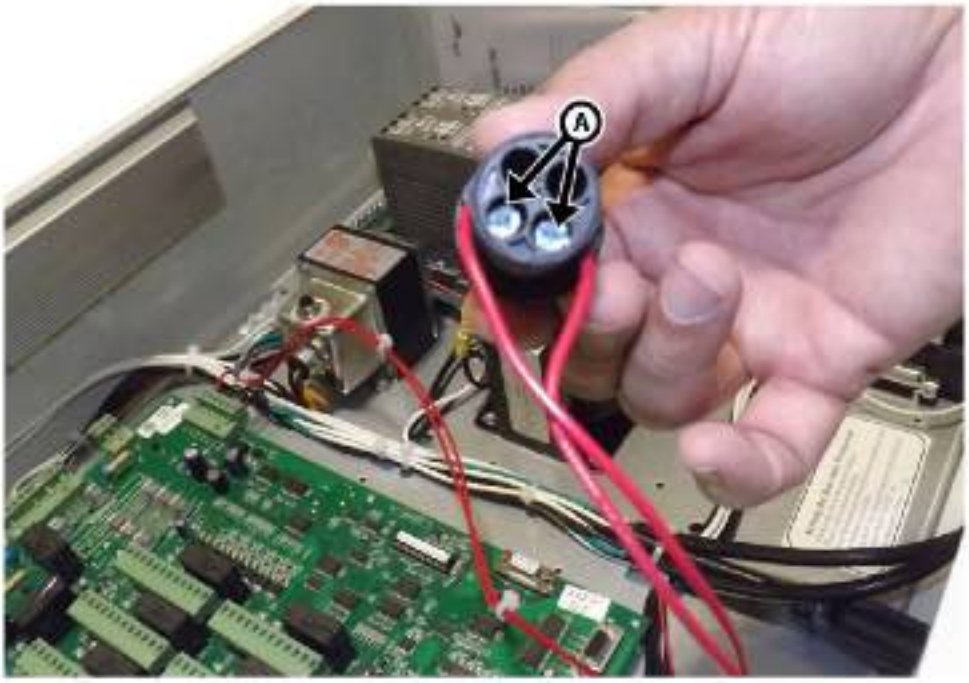

2 Remove any knockout from the controller box, install the reset switch (A), and paste the label (B) close to switch as shown in the image.





3 Reinstall the wires to the switch and secure with screws.

Step 25
Install light screens

Install the light screens.

Procedure

NOTE

You MUST install the light screens on the cab walls BEFORE building the cab.
The power supply for the light screens is shipped inside the end cap of the light screen shipping tube; be sure to check both ends of the tube before discarding it.

IMPORTANT: Before attaching the light screens, you must determine which is the ACTIVE side and which is the DEAD side. If you slide your hand along the edge of the active side, you can feel the transmitter/receiver in the groove of the light screen. The groove on the other side is empty.

It is critical that the light screen transmitter and receiver are pointed directly at one another, facing one another so the light screen will activate properly.

Note that the light screen receiver for each door opening is mounted on the extrusion closest to the control wall and the light screen transmitter is mounted on the opposite wall (as shown at the right).

A **Type 3 cab** is shown here as an example. The procedure will vary slightly depending on your cab type. (See the next page for a Type 1L cab with scissor gate).

1 For the first light screen:
   a. Place one light screen against the corresponding wall mounting extrusion making sure that you line up the bottom of the light screen with the top of the platform.
   b. Secure the light screen to the wall mounting extrusion using five #6-3/4 screws per light screen (p/n 105792).
2 For the second light screen:
   a. Place the second light screen against the corresponding wall mounting extrusion, making sure that you line up the bottom of the light screen with the top of the platform.
   b. Secure the light screen to the wall mounting extrusion using five #6-1" screws per light screen (p/n 105792-B).
3 Feed the light screen cables through the ceiling extrusion plates and connect per the Electrical Schematics.

Figure 87
Light screen installation

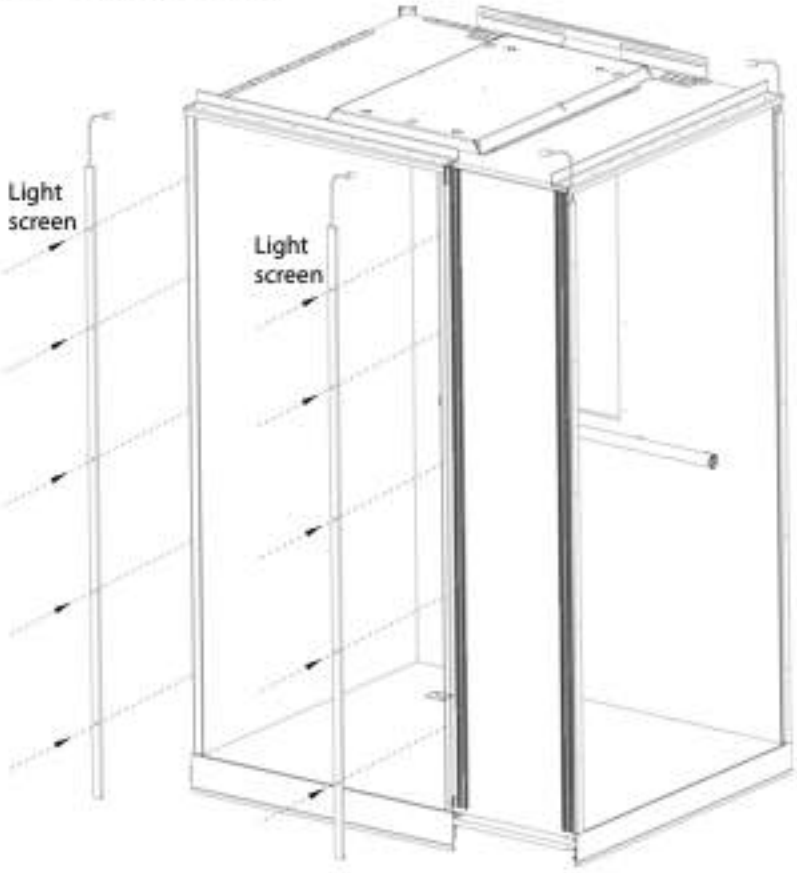

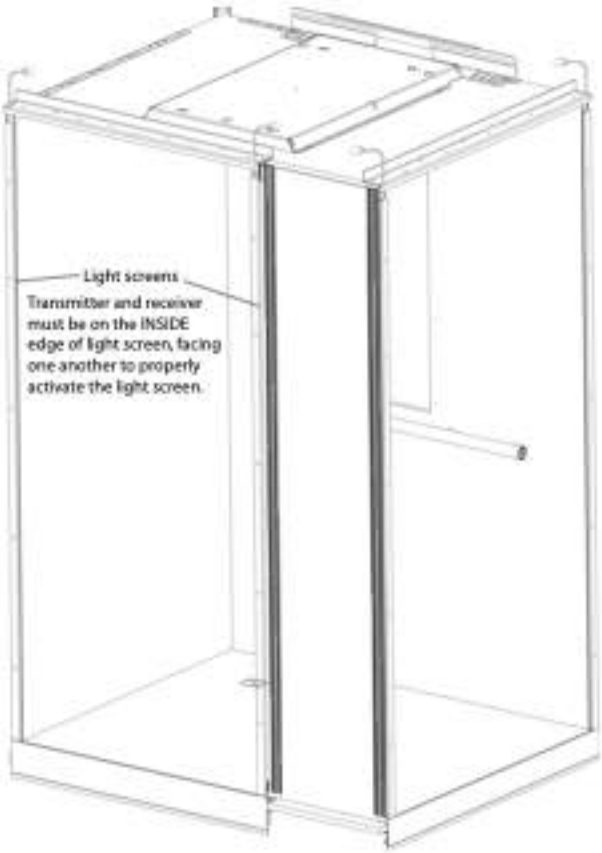

A **Type 1L cab with scissor gate** is shown below.

1 Attach the light screens to the slam post and pocket as shown, using five #6-1" screws per light screen (p/n 105792-B).

2 Feed the light screen cables through the ceiling extrusion plates and connect per the Electrical Schematics.

Figure 88
Light screens (Type 1L cab with scissor gate)

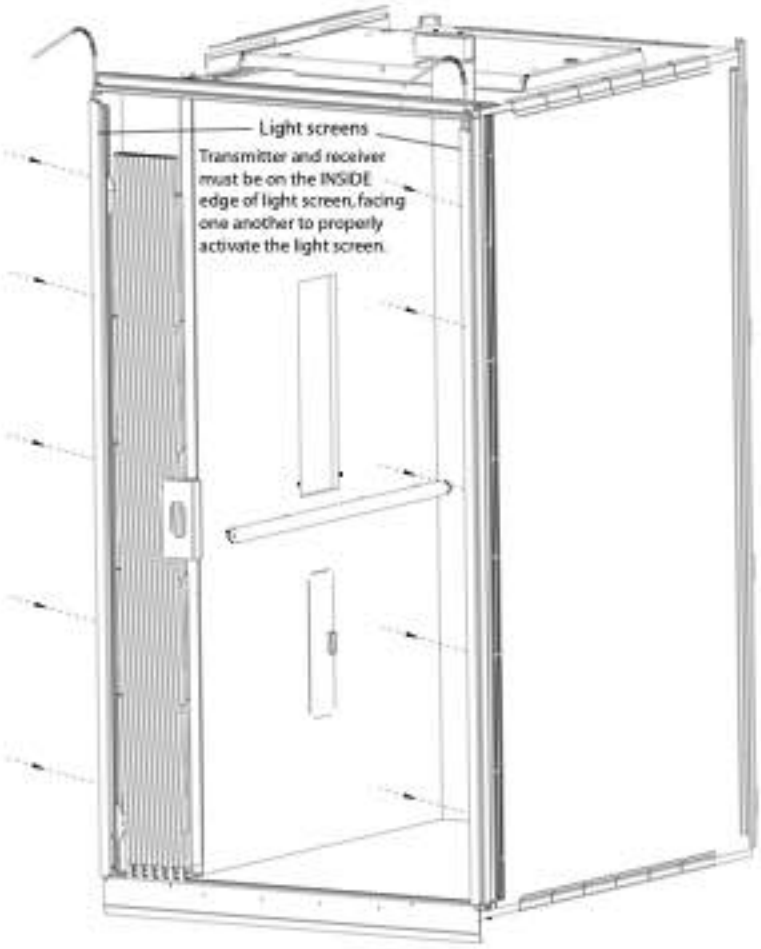

Step 26

Cab types – order of installation

This section illustrates the order of installation for Eclipse **STANDARD** cab types.

IMPORTANT

For **STEEL** cab assembly instructions, refer to Tech Bulletin, P/N 001155.

For **GLASS** cab assembly instructions, refer to Tech Bulletin, P/N 001024.

Considerations

The following cab types are illustrated in this section:

- Type 1 right (used in this guide)
- Type 1 left
- Type 2
- Type 3
- Type 4
- Type 5 center left hand small
- Type 5 center right hand small

The installation procedures described in this guide are based on a type 1 right hand cab.

NOTE

The numbers in the following cab assembly illustrations represent the sequence of assembly. For example, install the floor first, followed by the COP wall and so on.
Be sure the light screens are installed BEFORE assembling the cab (see the previous procedure).

Figure 89
Type 1 right

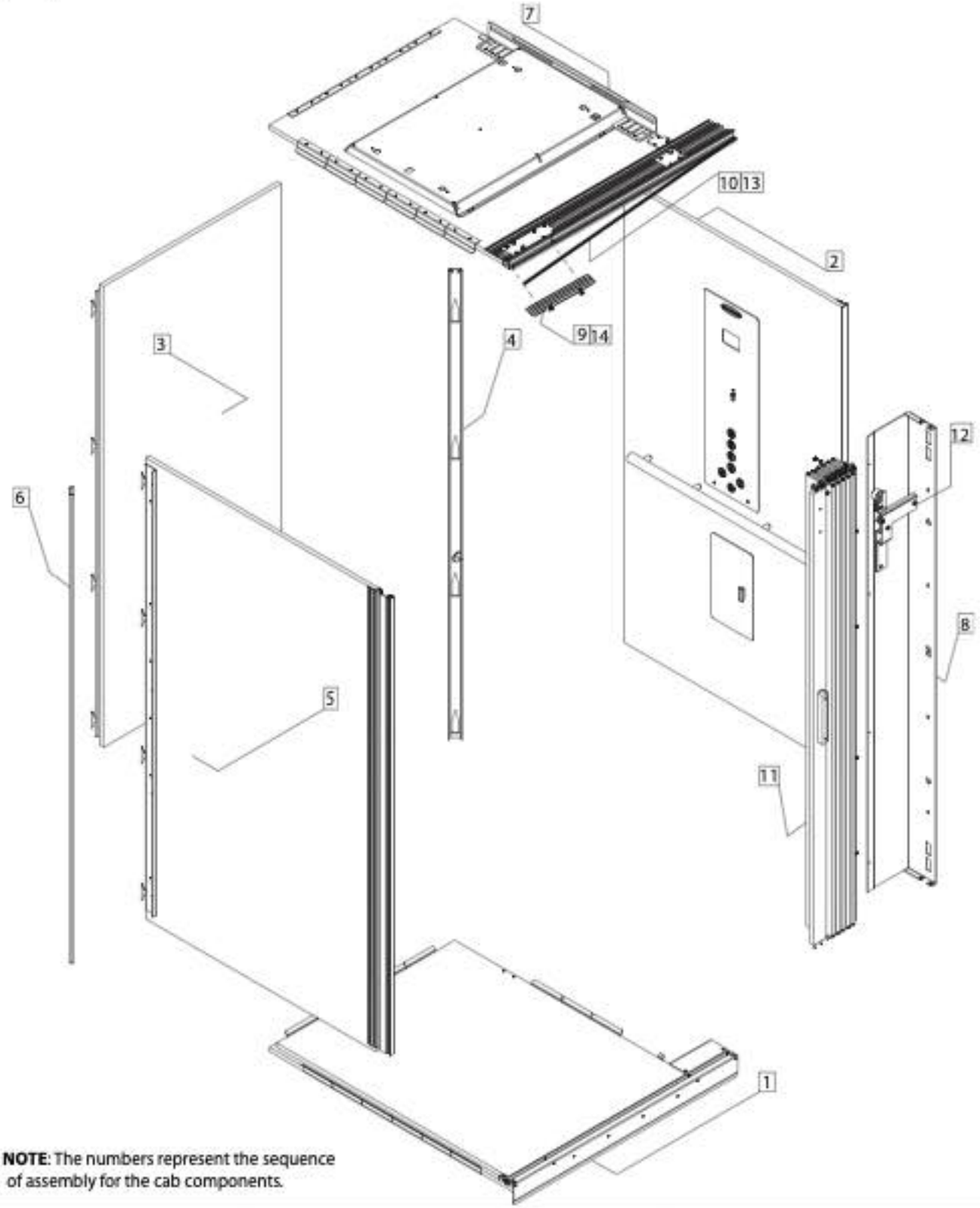

NOTE: The numbers represent the sequence of assembly for the cab components.

1) floor	6) channel joiner	11) gate
2) COP wall	7) ceiling	12) gate stabilizer
3) side wall opposite entrance	8) pocket	13) header splice tab—reattach
4) channel joiner	9) gate track corner piece—remove to install gate	14) gate track corner piece—reattach
5) side wall opposite COP wall	10) header splice tab—remove to install gate	

Figure 90
Type 1 right assembled

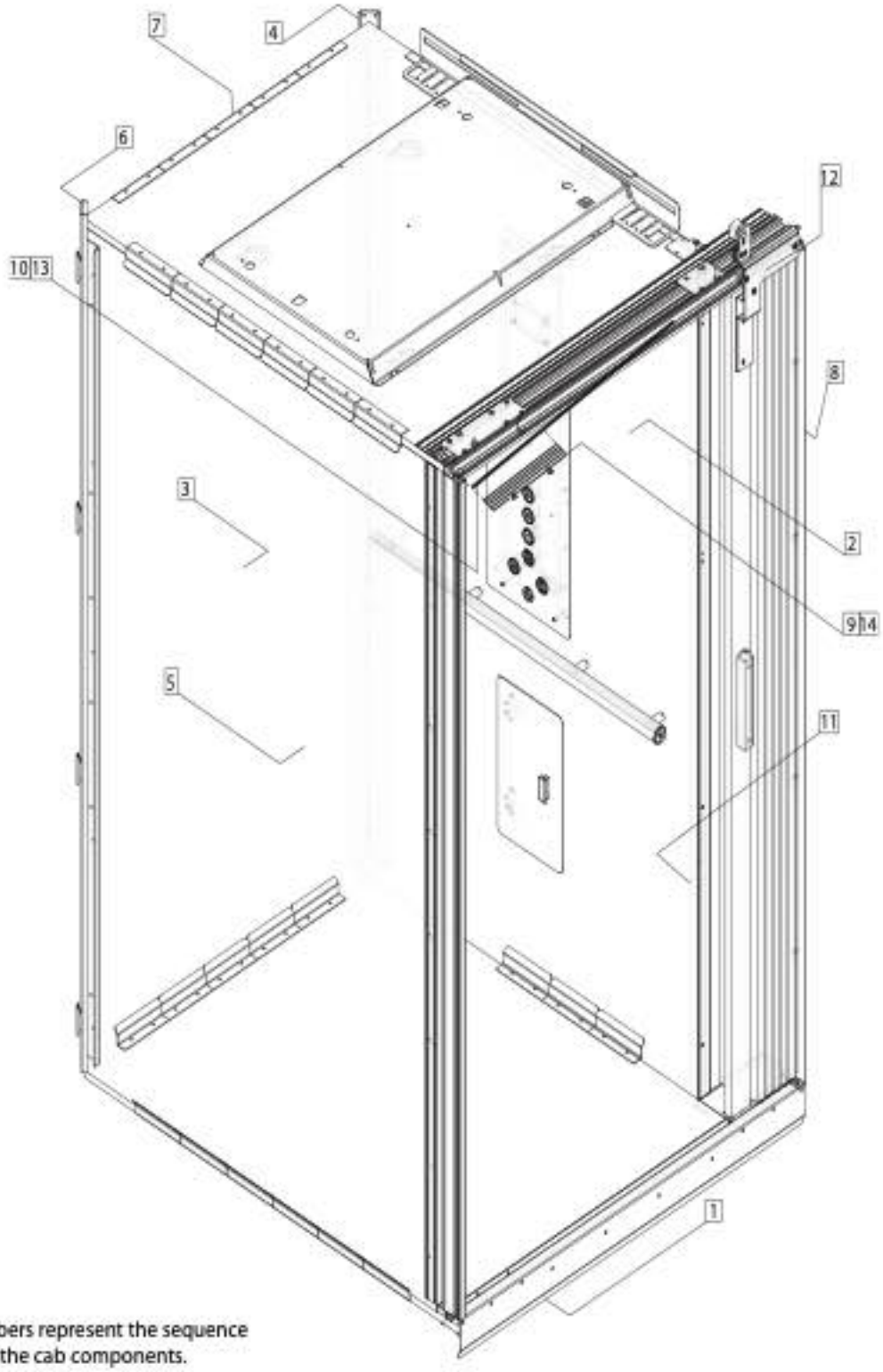

NOTE: The numbers represent the sequence of assembly for the cab components.

1) floor	6) channel joiner	11) gate
2) COP wall	7) ceiling	12) gate stabilizer
3) side wall opposite entrance	8) pocket	13) header splice tab—reattach
4) channel joiner	9) gate track corner piece—remove to install gate	14) gate track corner piece—reattach
5) side wall opposite COP wall	10) header splice tab—remove to install gate	

Figure 91
Type 1 left

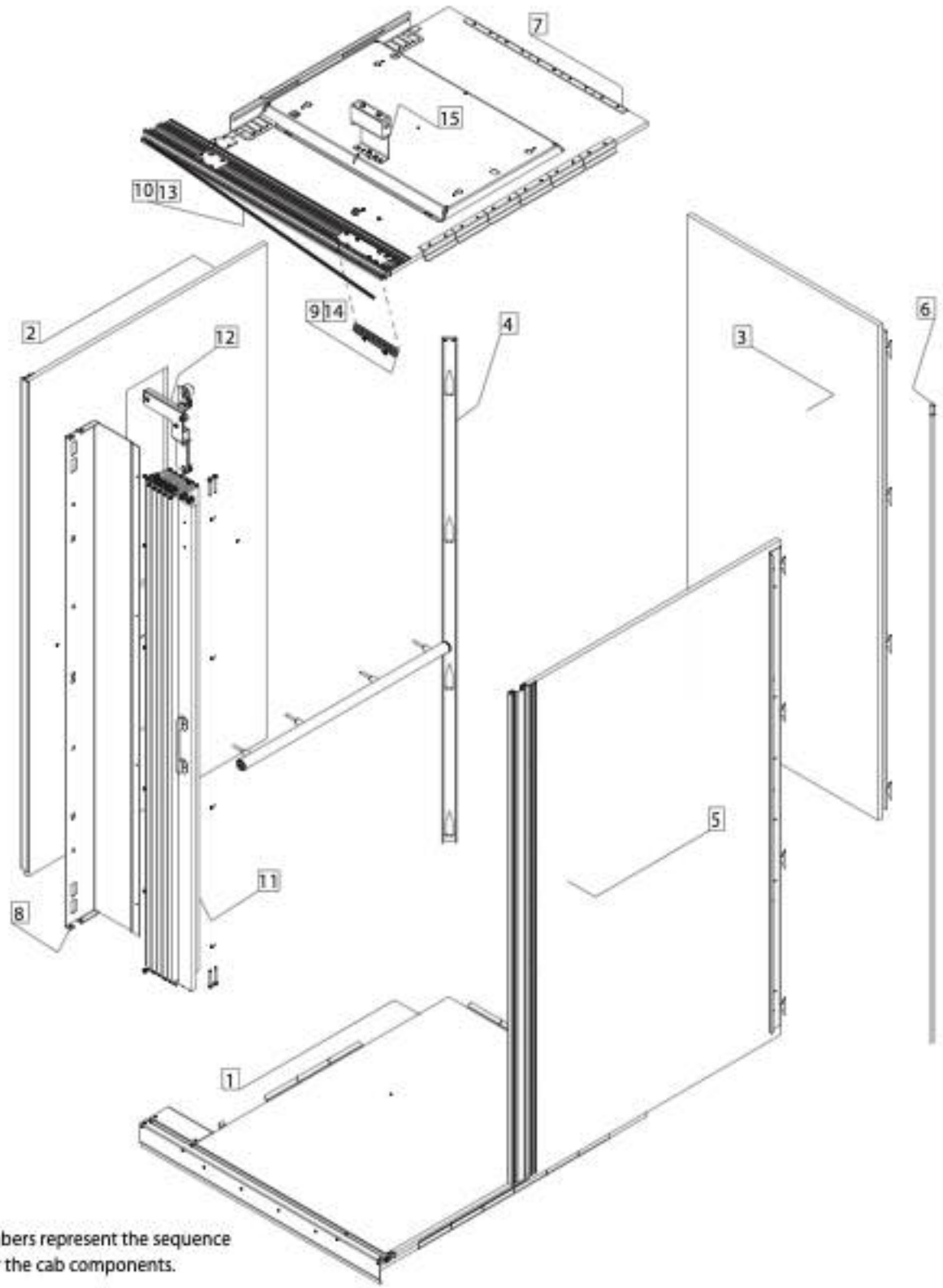

NOTE: The numbers represent the sequence of assembly for the cab components.

1) floor	6) channel joiner	11) gate
2) COP wall	7) ceiling	12) gate stabilizer
3) side wall opposite entrance	8) pocket	13) header splice tab—reattach
4) channel joiner	9) gate track corner piece—remove to install gate	14) gate track corner piece—reattach
5) side wall opposite COP wall	10) header splice tab—remove to install gate	15) gate switch

Figure 92
Type 1 left assembled

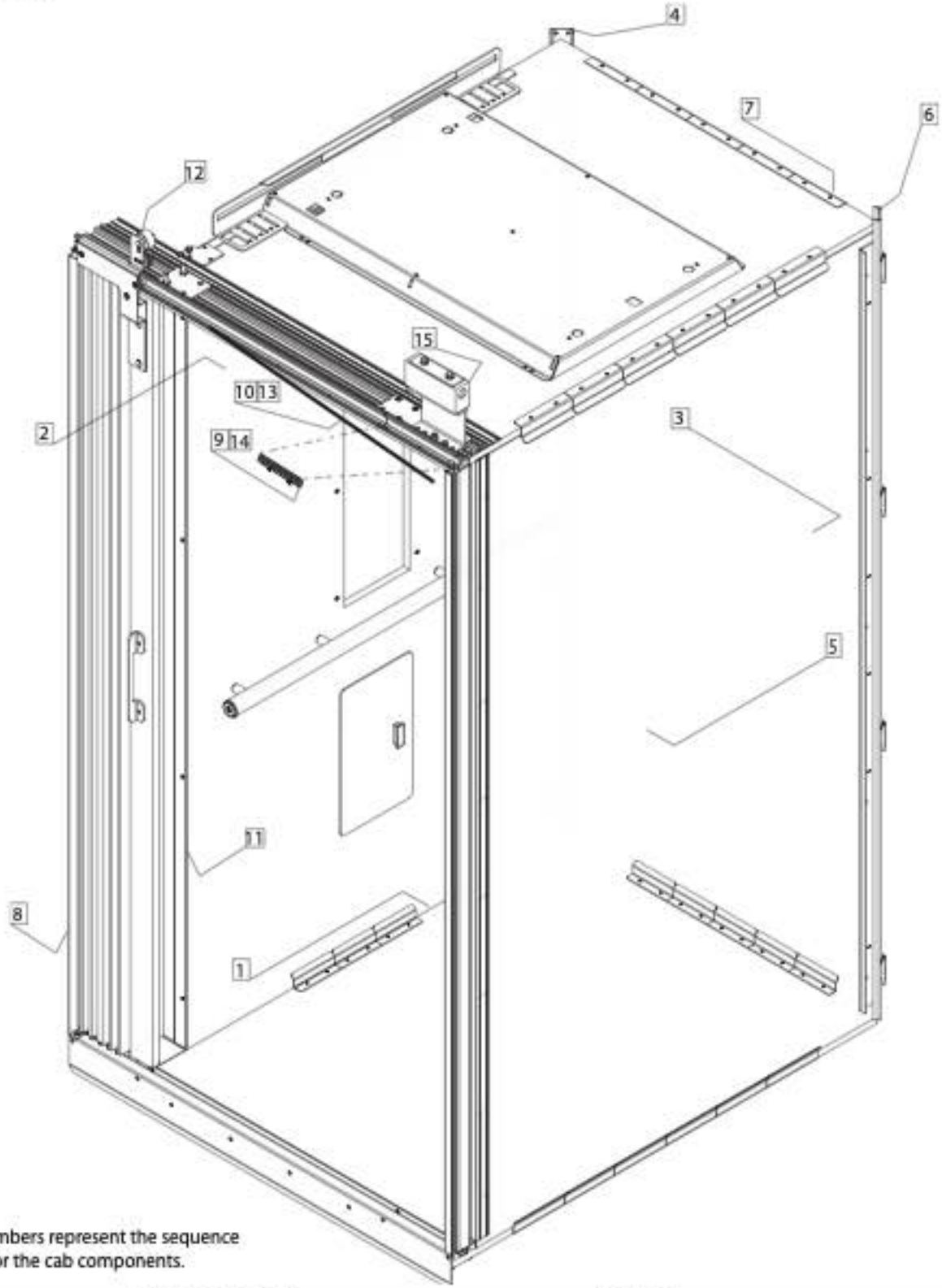

NOTE: The numbers represent the sequence of assembly for the cab components.

1) floor	6) channel joiner	11) gate
2) COP wall	7) ceiling	12) gate stabilizer
3) side wall opposite entrance	8) pocket	13) header splice tab—reattach
4) channel joiner	9) gate track corner piece—remove to install gate	14) gate track corner piece—reattach
5) side wall opposite COP wall	10) header splice tab—remove to install gate	15) gate switch

Figure 93
Type 2

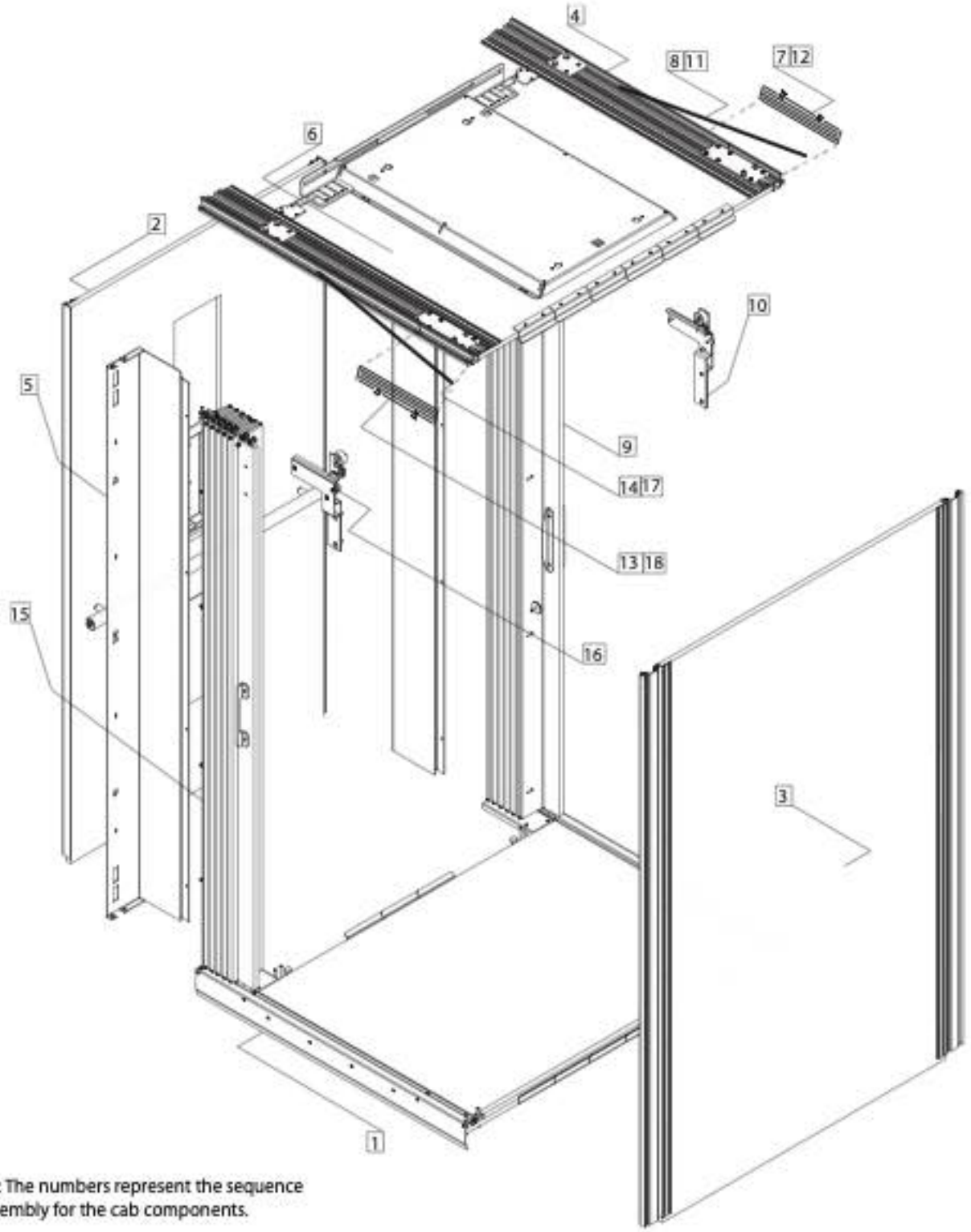

NOTE: The numbers represent the sequence of assembly for the cab components.

1) floor 2) COP wall 3) side wall opposite COP wall 4) ceiling 5) pocket 6) pocket	7) gate track corner piece—remove to install gate 8) header splice tab—remove to install gate 9) gate 10) gate stabilizer 11) header splice tab—reattach 12) gate track corner piece—reattach	13) gate track corner piece—remove to install gate 14) header splice tab—remove to install gate 15) gate 16) gate stabilizer 17) header splice tab—reattach 18) gate track corner piece—reattach

Figure 94
Type 2 assembled

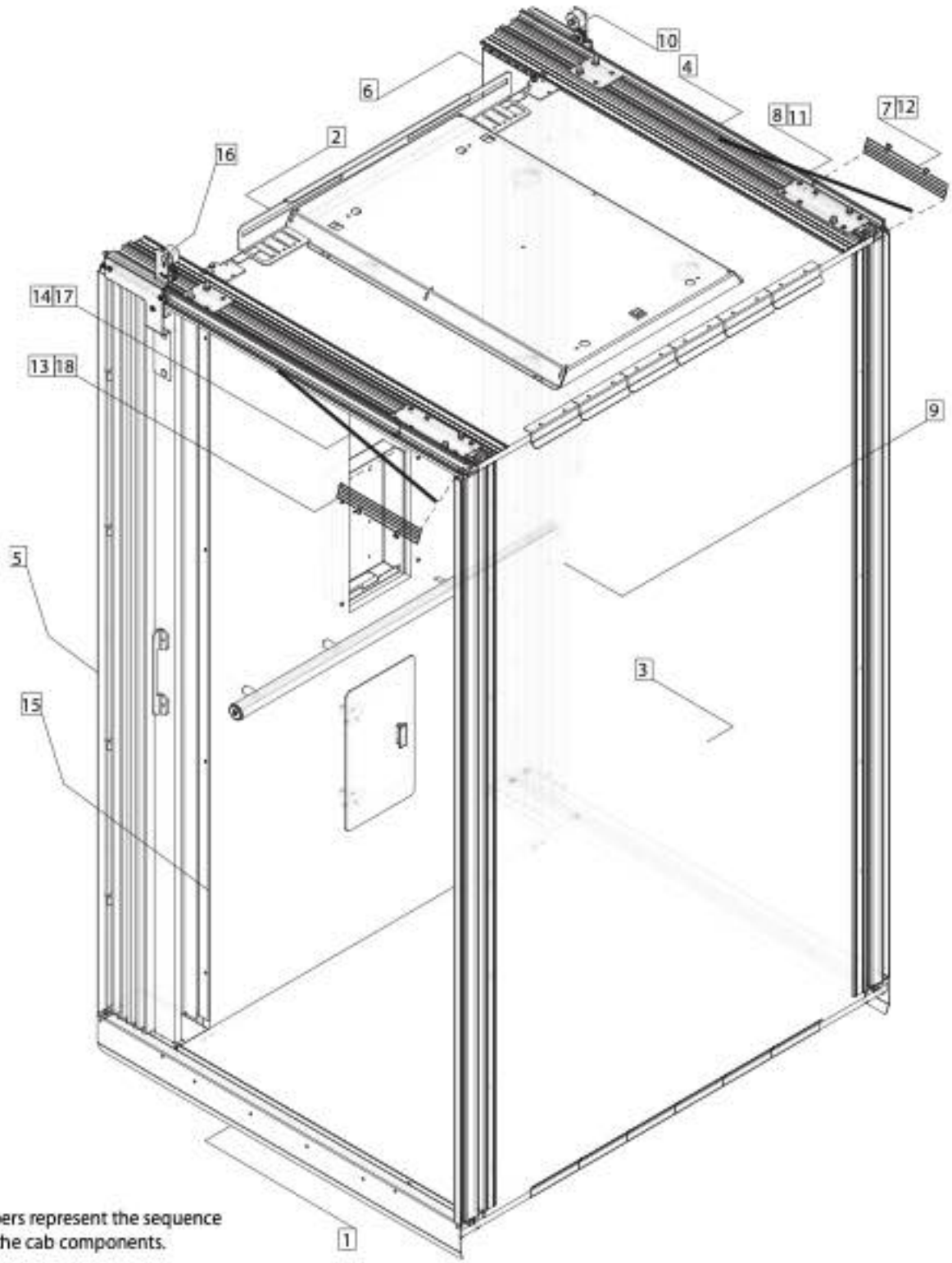

NOTE: The numbers represent the sequence of assembly for the cab components.

1) floor	7) gate track corner piece—remove to install gate	13) gate track corner piece—remove to install gate
2) COP wall	8) header splice tab—remove to install gate	14) header splice tab—remove to install gate
3) side wall opposite COP wall	9) gate	15) gate
4) ceiling	10) gate stabilizer	16) gate stabilizer
5) pocket	11) header splice tab—reattach	17) header splice tab—reattach
6) pocket	12) gate track corner piece—reattach	18) gate track corner piece—reattach

Figure 95
Type 3

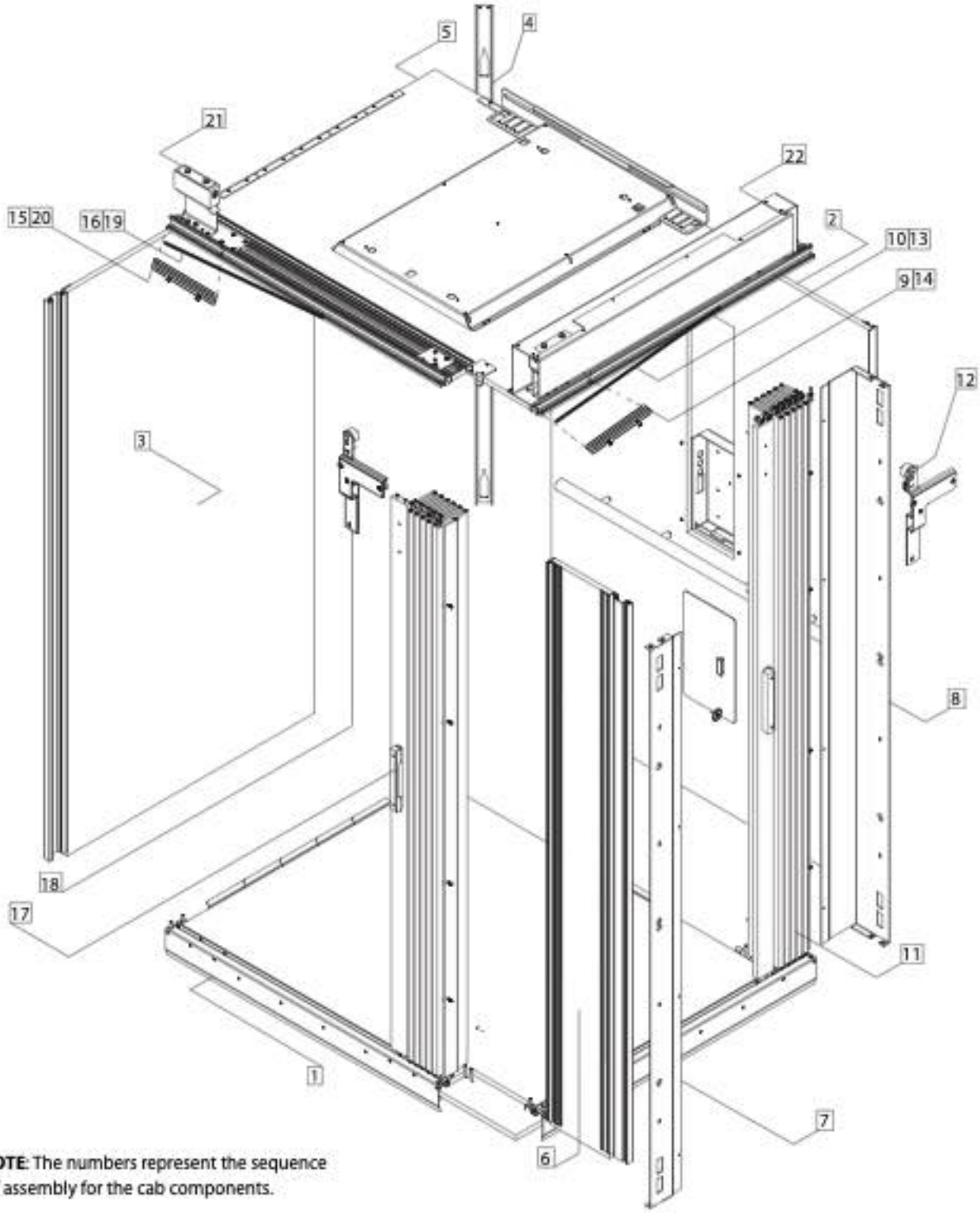

NOTE: The numbers represent the sequence of assembly for the cab components.

1) floor	8) pocket	15) gate track corner piece—remove to install gate
2) COP wall	9) gate track corner piece—remove to install gate	16) header splice tab—remove to install gate
3) side wall	10) header splice tab—remove to install gate	17) gate
4) joiner bracket	11) gate	18) gate stabilizer
5) ceiling	12) gate stabilizer	19) header splice tab—reattach
6) nib wall	13) header splice tab—reattach	20) gate track corner piece—reattach
7) pocket	14) gate track corner piece—reattach	21) gate switch 22) gate operator

Figure 96
Type 3 assembled

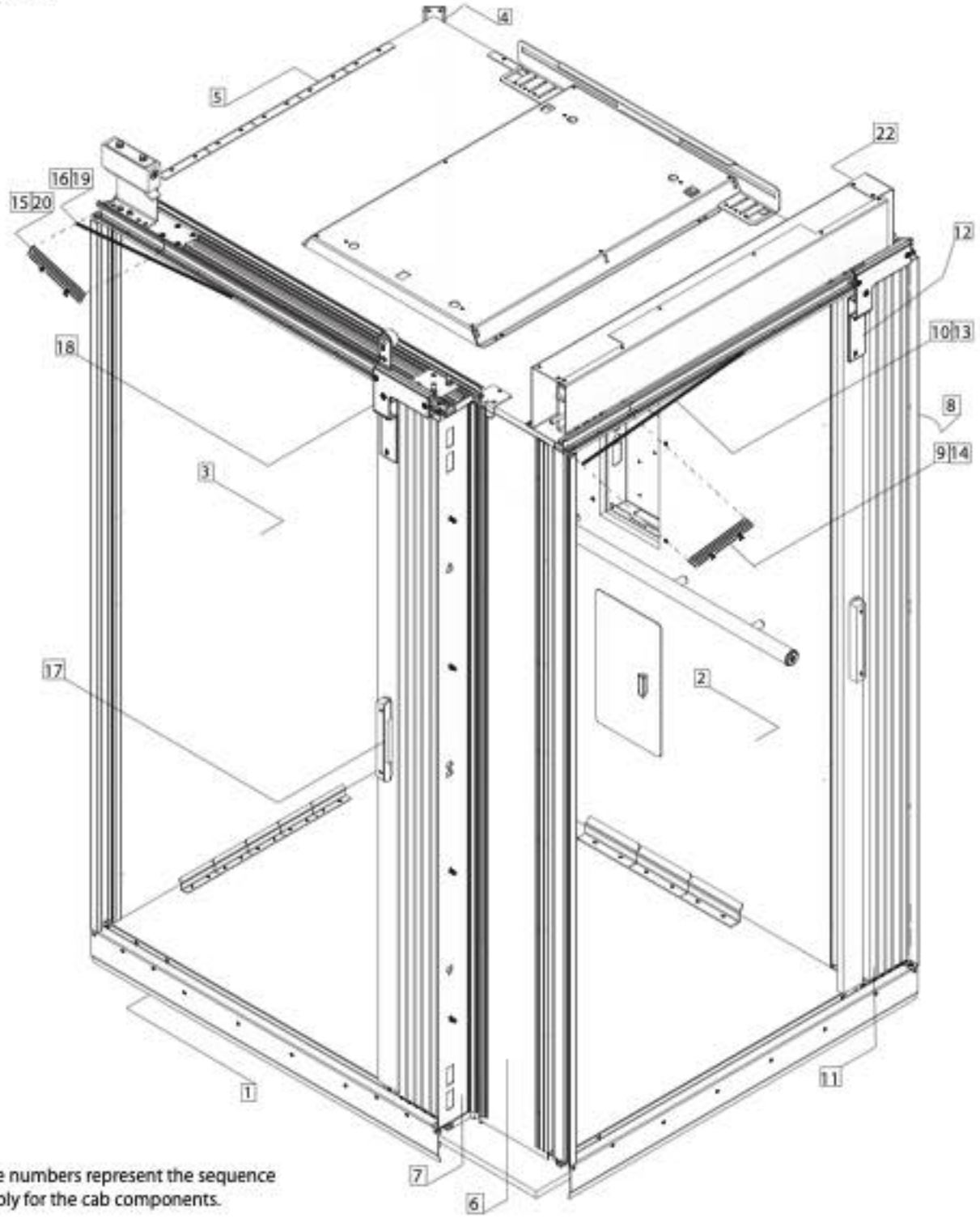

NOTE: The numbers represent the sequence of assembly for the cab components.

1) floor	8) pocket	15) gate track corner piece—remove to install gate
2) COP wall	9) gate track corner piece—remove to install gate	16) header splice tab—remove to install gate
3) side wall	10) header splice tab—remove to install gate	17) gate
4) joiner bracket	11) gate	18) gate stabilizer
5) ceiling	12) gate stabilizer	19) header splice tab—reattach
6) mob wall	13) header splice tab—reattach	20) gate track corner piece—reattach
7) pocket	14) gate track corner piece—reattach	21) gate switch 22) gate operator

Figure 97
Type 4

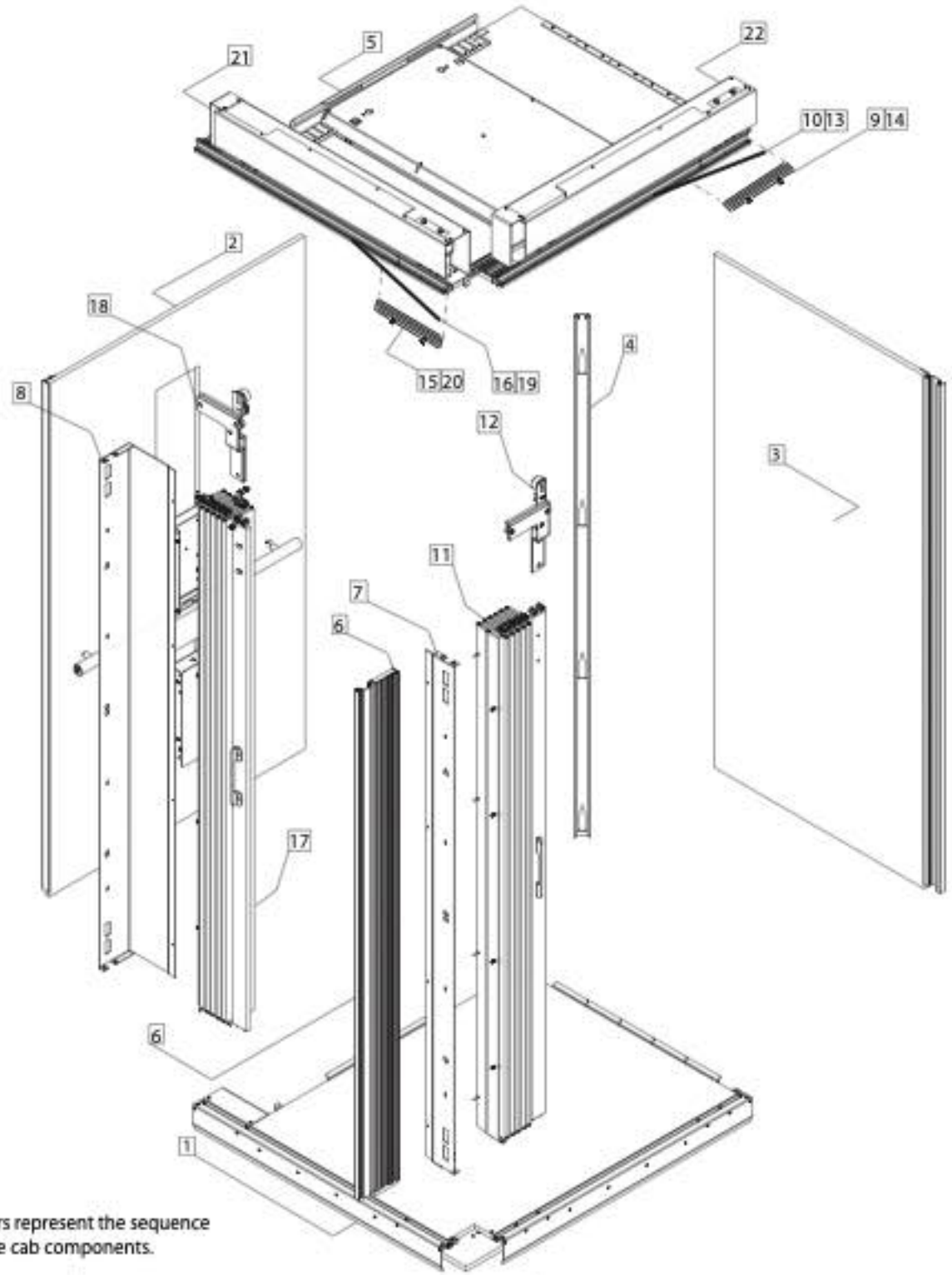

NOTE: The numbers represent the sequence of assembly for the cab components.

1) floor	8) pocket	15) gate track corner piece—remove to install gate
2) COP wall	9) gate track corner piece—remove to install gate	16) header splice tab—remove to install gate
3) side wall	10) header splice tab—remove to install gate	17) gate
4) joiner bracket	11) gate	18) gate stabilizer
5) ceiling	12) gate stabilizer	19) header splice tab—reattach
6) mob wall	13) header splice tab—reattach	20) gate track corner piece—reattach
7) pocket	14) gate track corner piece—reattach	21) gate operator / 22) gate operator

Figure 98
Type 4 assembled

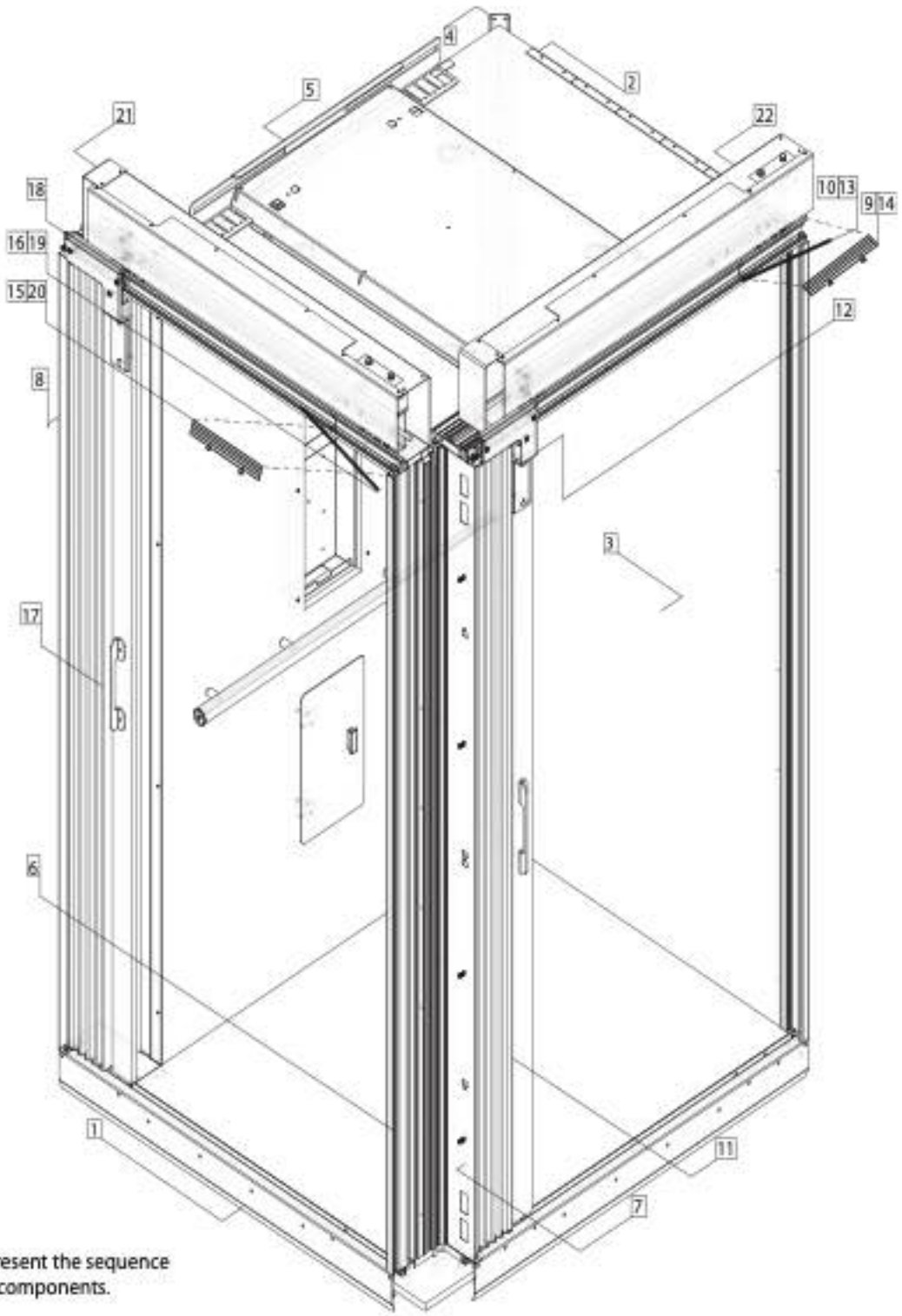

NOTE: The numbers represent the sequence of assembly for the cab components.

1) floor	8) pocket	15) gate track corner piece—remove to install gate
2) COP wall	9) gate track corner piece—remove to install gate	16) header splice tab—remove to install gate
3) side wall	10) header splice tab—remove to install gate	17) gate
4) joiner bracket	11) gate	18) gate stabilizer
5) ceiling	12) gate stabilizer	19) header splice tab—reattach
6) nib wall	13) header splice tab—reattach	20) gate track corner piece—reattach
7) pocket	14) gate track corner piece—reattach	21) gate operator 22) gate operator

Figure 99
Type 5 center left small

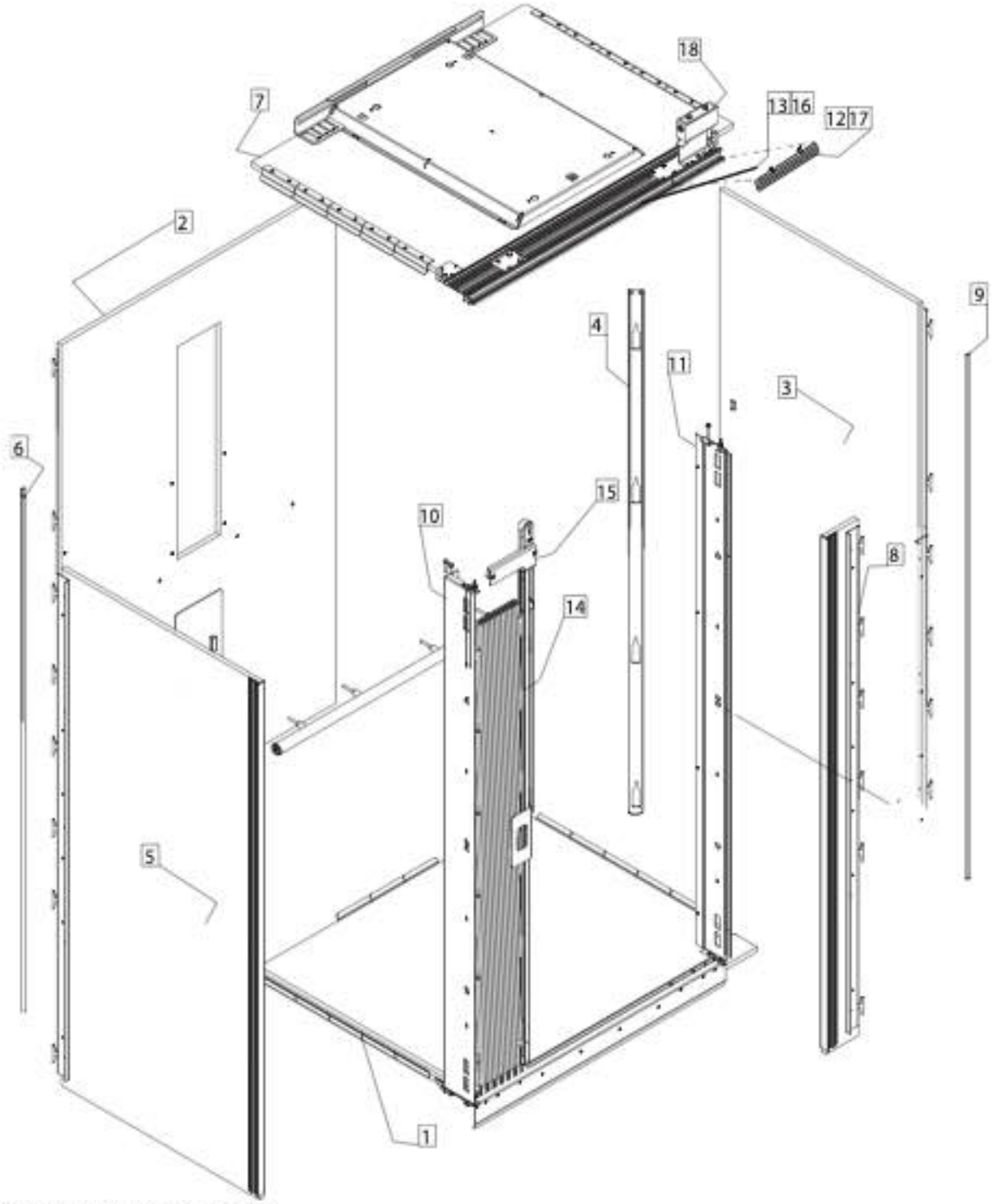

NOTE: The numbers represent the sequence of assembly for the cab components.

1) floor	7) ceiling	13) header splice tab—remove to install gate
2) COP wall	8) nib wall	14) gate
3) side wall	9) joiner channel	15) gate stabilizer
4) joiner channel	10) pocket	16) header splice tab—reattach
5) side wall	11) slam support	17) gate track corner piece—reattach
6) joiner channel	12) gate track corner piece—remove to install gate	18) gate switch

Figure 100
Type 5 center left small assembled

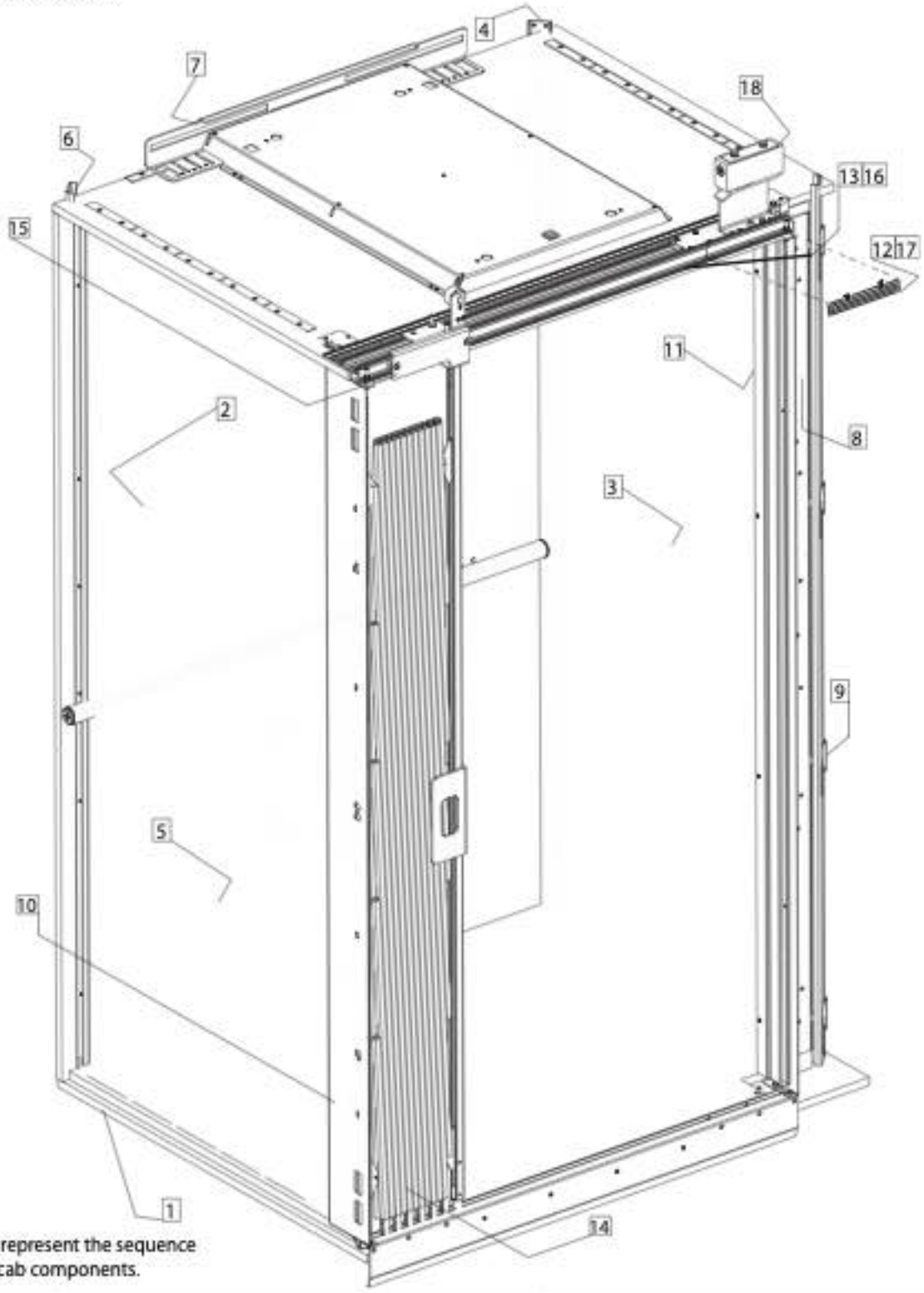

NOTE: The numbers represent the sequence of assembly for the cab components.

1) floor	7) ceiling	13) header splice tab—remove to install gate
2) COP wall	8) nib wall	14) gate
3) side wall	9) joiner channel	15) gate stabilizer
4) joiner channel	10) pocket	16) header splice tab—reattach
5) side wall	11) slam support	17) gate track corner piece—reattach
6) joiner channel	12) gate track corner piece—remove to install gate	18) gate switch

Figure 101
Type 5 center right small

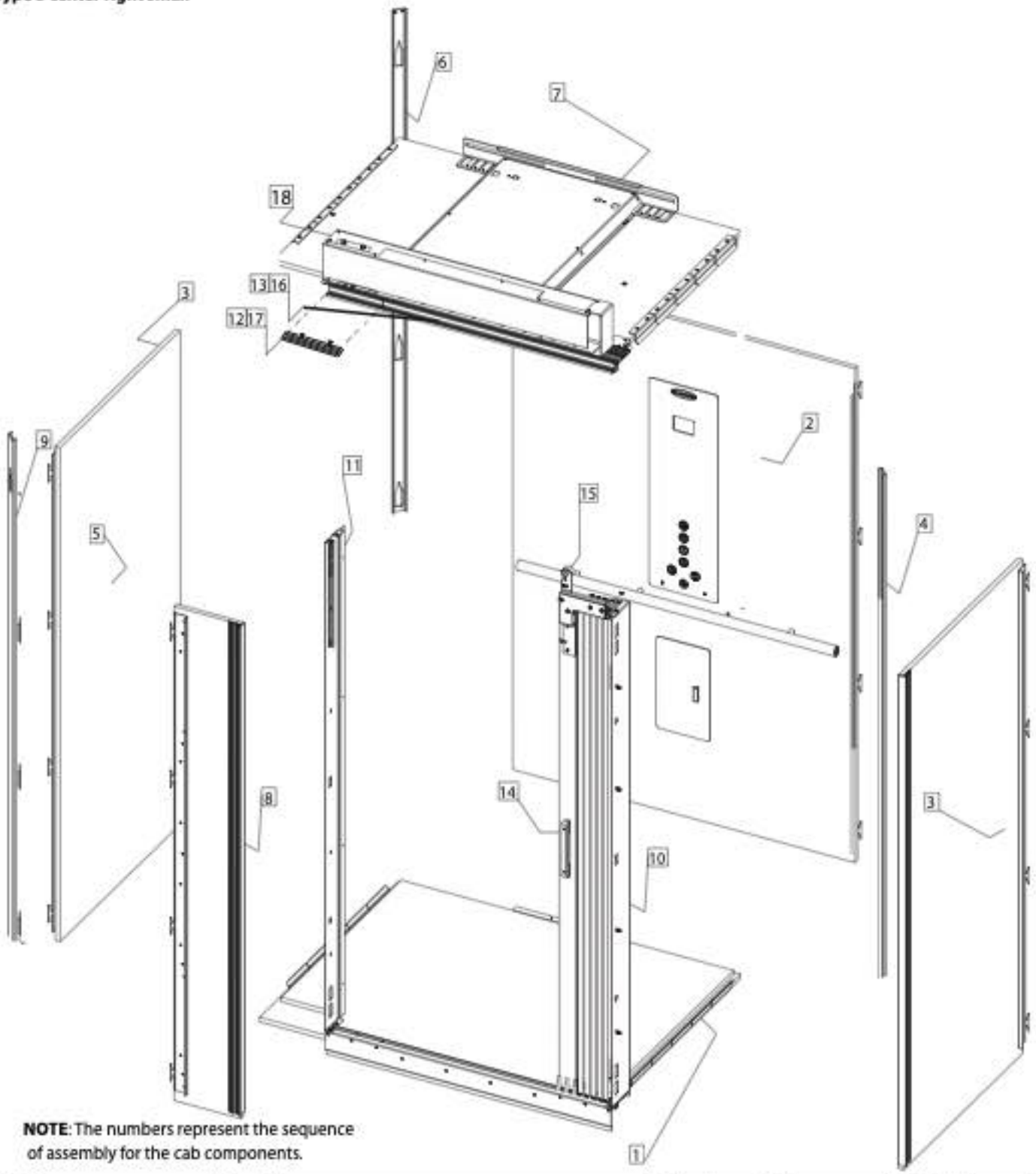

NOTE: The numbers represent the sequence of assembly for the cab components.

1) floor	7) ceiling	13) header splice tab—remove to install gate
2) COP wall	8) nib wall	14) gate
3) side wall	9) joiner channel	15) gate stabilizer
4) joiner channel	10) pocket	16) header splice tab—reattach
5) side wall	11) slam support	17) gate track corner piece—reattach
6) joiner channel	12) gate track corner piece—remove to install gate	18) gate operator

Figure 102
Type 5 center right small assembled

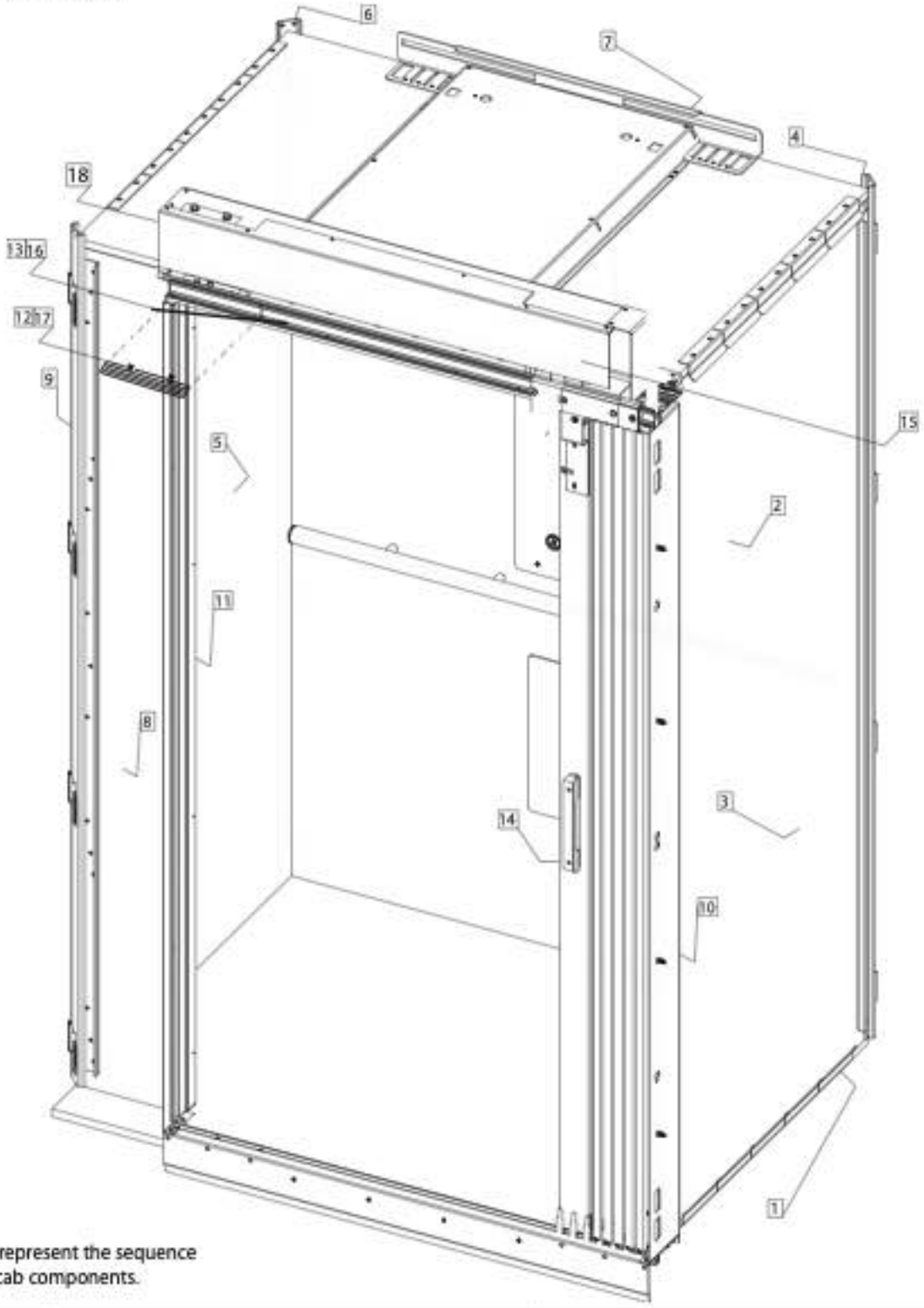

NOTE: The numbers represent the sequence of assembly for the cab components.

1) floor	7) ceiling	13) header splice tab—remove to install gate
2) COP wall	8) nib wall	14) gate
3) side wall	9) joiner channel	15) gate stabilizer
4) joiner channel	10) pocket	16) header splice tab—reattach
5) side wall	11) slam support	17) gate track corner piece—reattach
6) joiner channel	12) gate track corner piece—remove to install gate	18) gate operator

Step 27
Cab assembly

Assemble the cab.

NOTE

The following cab assembly procedure is for STANDARD cabs. For any cab other than standard, our Engineering department fits all parts together using the full version of SOLIDWORKS. We call this 3D drawing our "model".

To get a copy of the 3D model for your job, email our Tech Support administrator at CFujs@savaria.com requesting a copy of the 3D model. This 3D model is job specific, showing all cab parts and how they fit together.

To view the 3D model, download a free read-only version of SOLIDWORKS from www.solidworks.com. In SOLIDWORKS, you can rotate, zoom in, and hide outer parts to see what is underneath

IMPORTANT

This procedure provides assembly instructions for a **STANDARD** cab. For **STEEL** cab assembly instructions, refer to Tech Bulletin, P/N 001155. For **GLASS** cab assembly instructions, refer to Tech Bulletin, P/N 001024.

Procedure

NOTE

You MUST install the light screens on the cab walls BEFORE building the cab. The light screens are not shown in the following procedure. See the procedure on page 49. Be aware that the power supply for the light screens is inside the end cap of the light screen shipping tube so be sure to remove both ends before discarding the shipping tube.

1 Ensure the cab floor is level from side to side.

2 Assemble the floor support strap 226607 to the floor support bracket 226608.

Figure 103
Floor support bracket and strap shown without cab floor

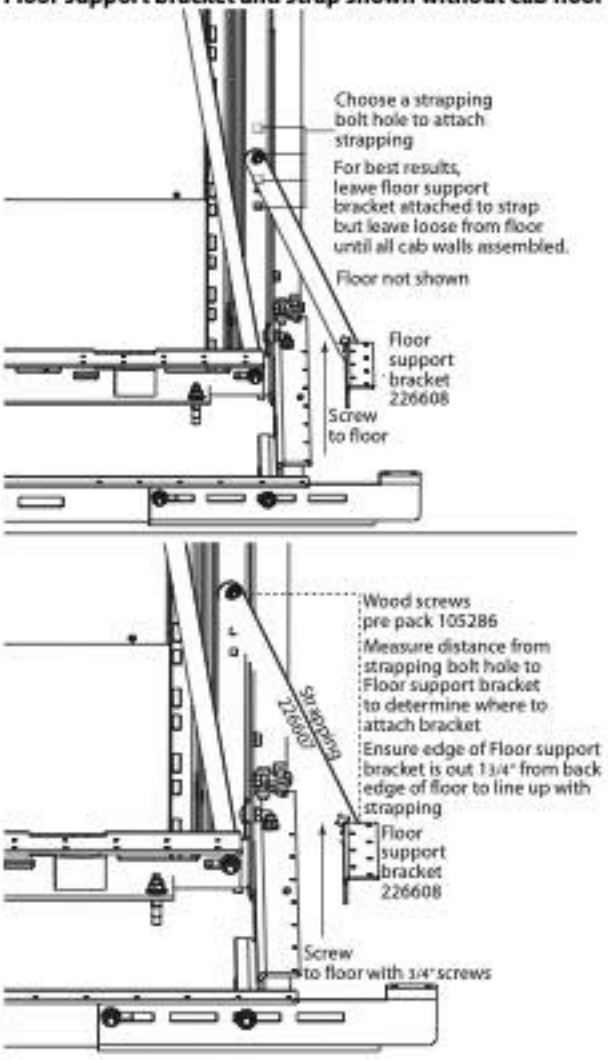

Assemble the brackets together first. Decide which strapping bracket bolt hole to use and then place the floor support bracket underneath the floor to determine where to attach it. Attach the floor support bracket 1 - " past the floor towards the hoistway to be inline with the strapping attachment to the sling.

Figure 104
Floor support bracket and strap attachment

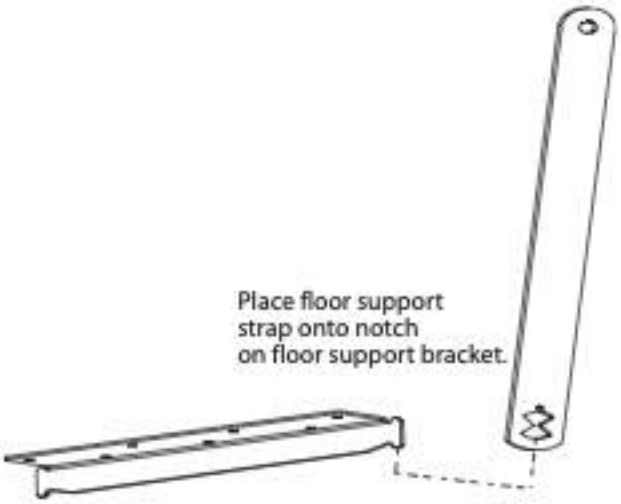

3 Twist the strap to the right side until the strap locks.
If installing strap on left side of hoistway, twist to the left.

Figure 105

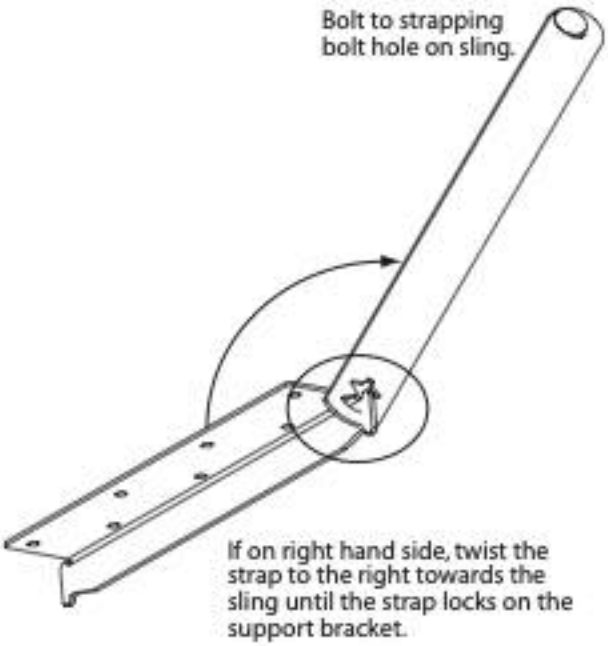

4 Remove pre-assembled carriage bolt and nut, and attach strapping to sling.

Bolt and nut pre-assembled to strap

1) 1 x $\frac{1}{8}$ -16 x $\frac{1}{4}$ " carriage bolt 1 x $\frac{1}{8}$ lock washer

5 Attach the floor support bracket 226608 to the cab floor on the gate opening side at the rail once cab wall assembly is complete. Refer to Figure 153 on page 94.

NOTE

Leave the floor support bracket attached to the strap but leave it loose from the floor until all cab walls are assembled.

Figure 106
Floor support bracket

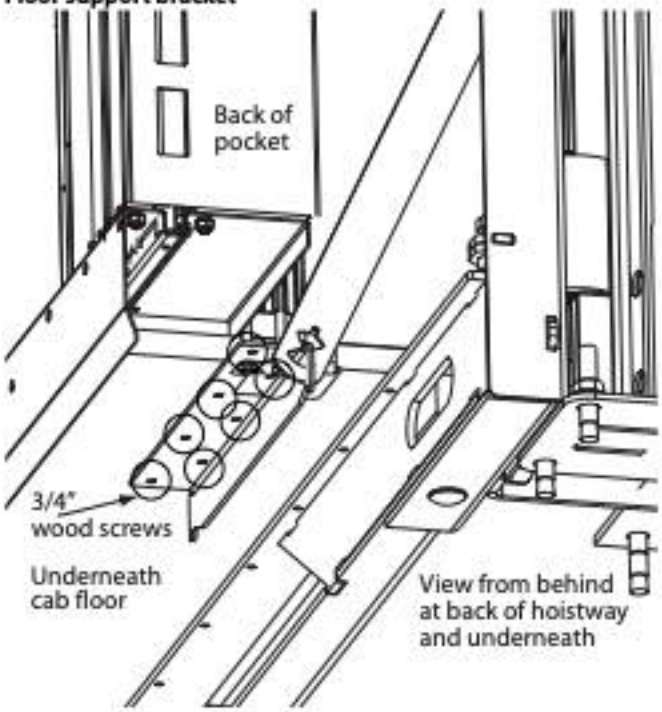

Attach with pre pack 105286

1) $\frac{3}{4}$ " wood screws

6 Lift the back of the cab *COP* wall onto the cab floor.
7 Place the next cab wall onto the cab floor.
8 To secure the walls together at the corners use a channel joiner. (shown at the right). Tap the joiner into place using a soft mallet.

Figure 107
Cab walls channel joiner

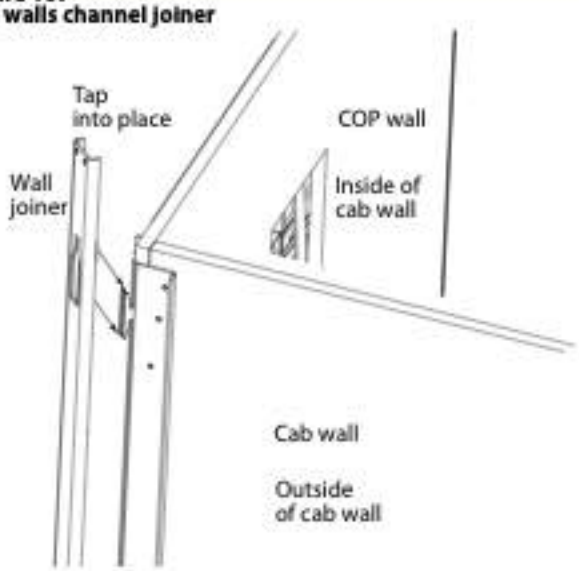

Attach with channel joiner
226049 (80" cab) / 226048 (96" cab)

9 Repeat the preceding step for the third wall if a one door elevator.

10 Place the ceiling onto the cab walls.
The walls snug to the guide strips along the ceiling edges.

Figure 108
Ceiling placement

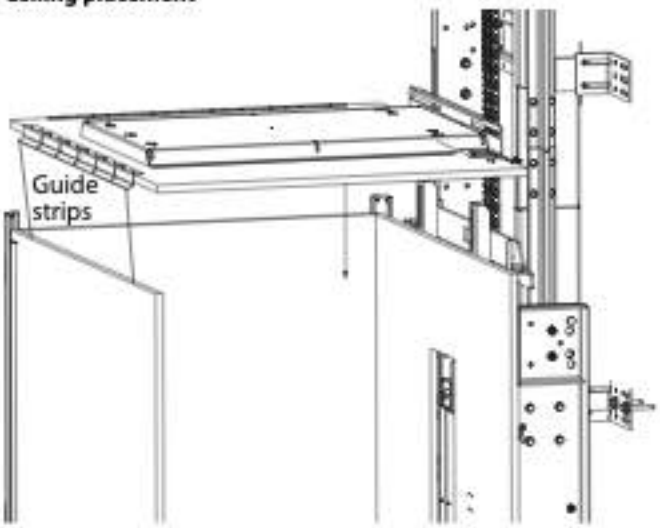

11 Assemble the ceiling to the sling support brackets.
Attach to the ceiling support brackets on top of the sling part no. 227018.

Figure 109
Ceiling to sling brackets attachment

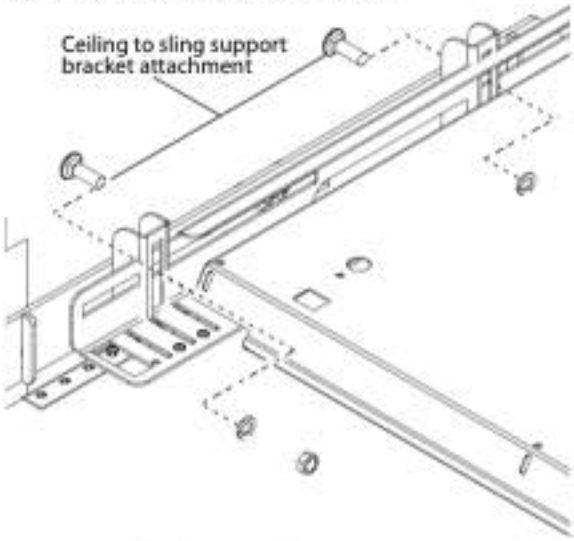

Attach with pre pack C5290149 (was 227029)

2 x $\frac{1}{2}$" - 13 x 1$\frac{1}{2}$" carriage bolts
2 x $\frac{1}{2}$" lock washer
2 x $\frac{1}{2}$" hex nut

12 Attach the ceiling to the cab walls.

CAUTION

The wood screws can split the cab walls. Be sure to pre-drill to avoid cab wall damage. Use a $\frac{1}{8}$" drill bit.

Once these screws pierce the cab walls they help support the overall cab structure.

Figure 110
Ceiling assembly

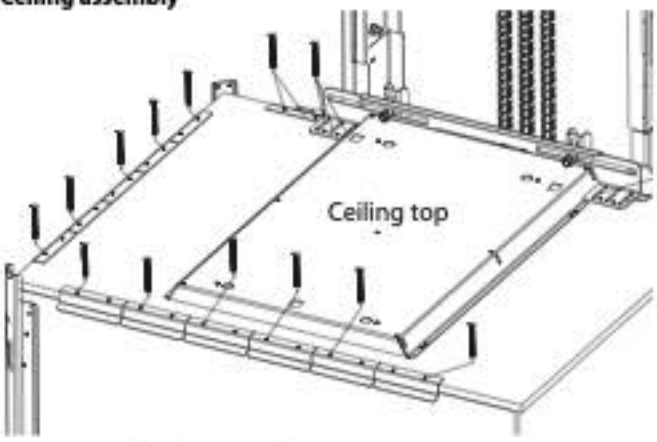

Attach with pre pack C5290149 (was 227546)

#8 x 1$\frac{5}{8}$" wood screws

13 If you have a larger cab with auto slim doors, cab stabilizer brackets are provided for additional stability if needed. Attach these two brackets (326510-L/-R) to the top of the sling and the back of the COP wall.
   a. Attach the slotted end of each bracket to the top of the sling using the 2 bolts provided. Keep the bolts loose.
   b. Slide the brackets out toward the COP wall.
   c. Use the 6 short screws to secure each bracket to the back of the COP wall.
   d. Tighten the 2 bolts securing each bracket to the top of the sling.

Figure 111
Cab stabilizer brackets

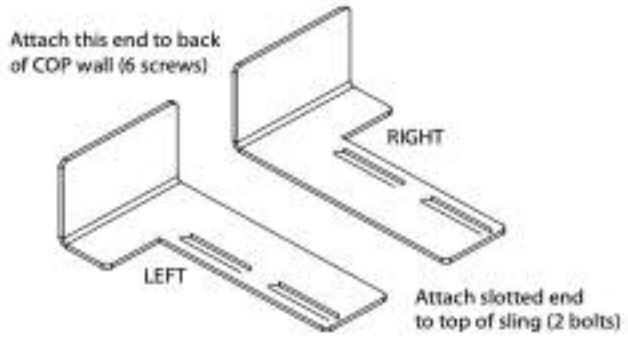

14 Assemble the ceiling to the wall strap at the pocket side.

Figure 112
Ceiling to wall strap at pocket side

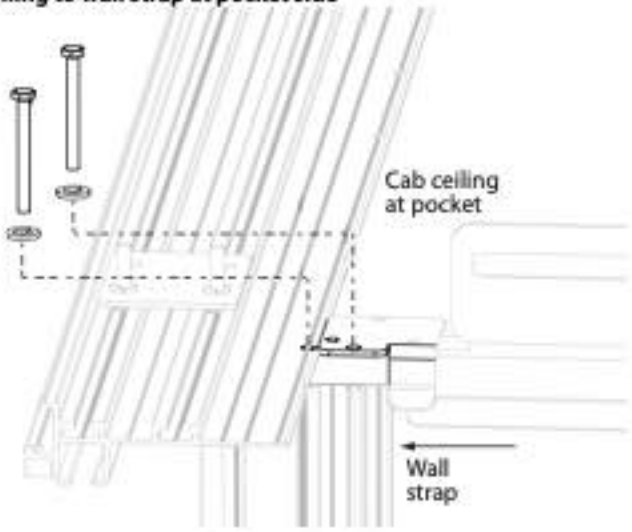

Attach with pre pack 226660

2 x $\frac{1}{4}$"-20 x 2$\frac{1}{2}$" hex head bolts
2 x $\frac{1}{4}$" lock washer

15 Assemble the ceiling to the wall strap at the slam side.

Figure 113
Ceiling to wall strap at slam side

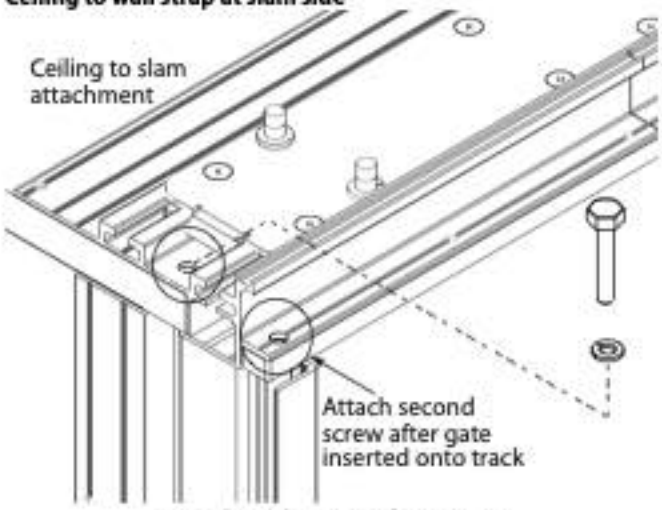

Attach with pre pack 226660

1 x $\frac{1}{4}$" - 20 x 1$\frac{1}{2}$" hex head bolt
1 x $\frac{1}{4}$" lock washer

16 Attach the floor to the cab walls around the perimeter of the floor.

CAUTION

The wood screws can split the cab walls. Be sure to pre-drill to avoid cab wall damage. Use a $\frac{1}{8}$" drill bit.

Figure 114
Wood screws to help support wall structure

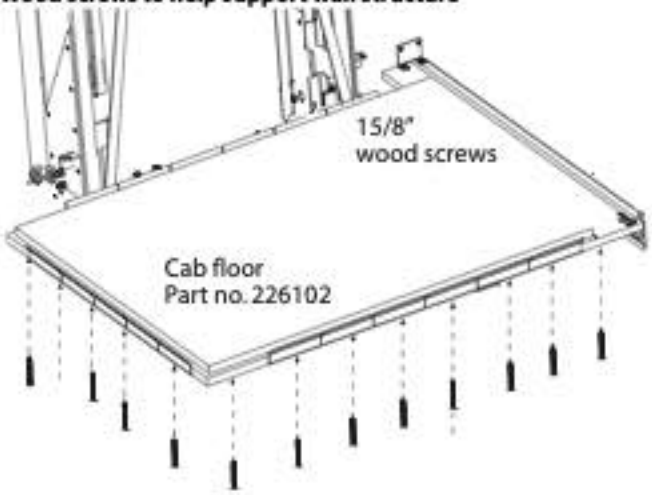

Attach with pre pack C5290149 (was 227546)

#8 x 1$\frac{5}{8}$" wood screws

17 Attach the floor to the wall strap at the slam side.

Figure 115
Floor to wall strap at slam side

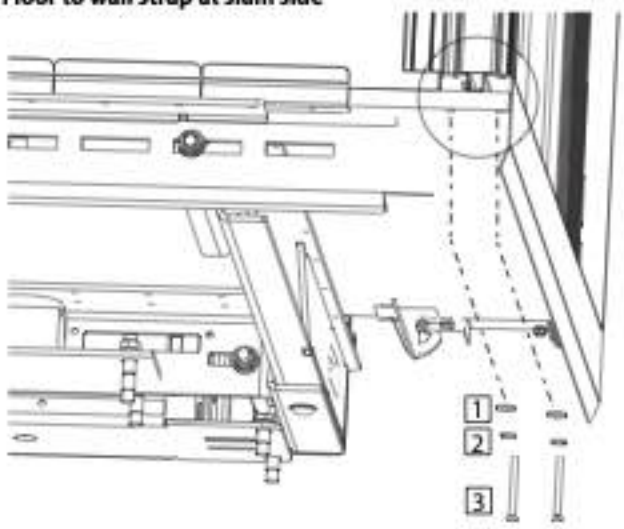

Attach with pre pack 226660

1) 2 x $\frac{1}{4}$" flat washer
2) 2 x $\frac{1}{4}$" lock washer
3) 2 x $\frac{1}{4}$"-20 x 2$\frac{1}{2}$" hex head bolts

18 Attach the floor to the wall strap at the pocket side.

Figure 116
Floor to wall strap at pocket side

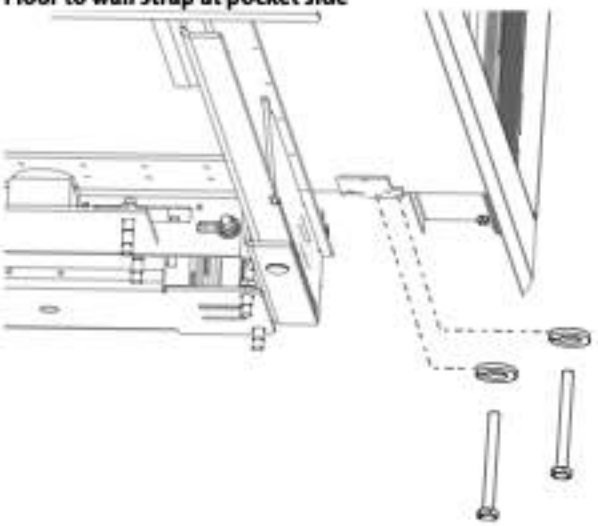

Attach with pre pack 226660

4) 2 x $\frac{1}{4}$" lock washer
5) 2 x $\frac{1}{4}$"- 20 x 2$\frac{1}{2}$" hex head bolts

19 Once the car top box has been installed (see STEP 29), you can connect the ceiling pot lights to T10 on the car top board.

The ceiling pot lights connector and car top stop switch connector are housed in flexible conduit on the cab ceiling top.

20 Once the car top box has been installed (see STEP 29), you can connect the car top stop switch between SR2 and LS1 on the car top board. The car top stop switch location is always on the sill side.

NOTE

When the car top switch is activated, you will need to reset the controller.

Figure 117
Car top stop switch

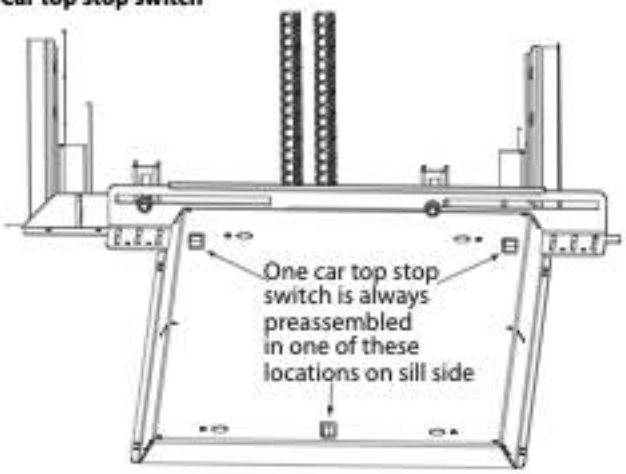

Step 28
Car operating panel (COP)

Install the car operating panel.

Procedure

NOTE

Refer to Appendix H for Set up, programming (including how to turn off auto-answer) and troubleshooting of the Rath 2400.

1 Attach the COP support bracket to the back side of the COP wall at the bottom of the cutout (two screws).

Figure 118
COP support bracket



COP attaches to bracket at these two points (from front of COP wall)

2 Insert the car operating panel (COP) into the COP wall cutout from inside the cab. Note that the clips at the top of the COP MUST slide in behind the cab wall to hold the COP in place. Bend the clips slightly to accommodate 3/4" walls as necessary.

3 Secure the COP to the COP support bracket with the two screws provided.

4 Once the car top box has been installed (see STEP 27), you can connect the red, blue and yellow CAT-5 cables from the COP board to connectors T11, T12 and T13 on the car top board

Figure 119
COP installation





Secure COP to support bracket with two screws

Step 29
Cab types – differences

This section describes the installation differences between the type 1R cab and the rest of the available cab types:

- Type 1 right (used in this guide)
- Type 1 left
- Type 2
- Type 3
- Type 4
- Type 5 center left hand small
- Type 5 center right hand small
- Type 5 center left
- Type 5 center right
- Type 5 left hand
- Type 5 right hand

Considerations

Eclipse cab sizes, number of doors per elevator, and fastener attachment locations are different from type to type. However, in general, all floors, ceilings, slam side tops and bottoms, and pocket side tops and bottoms have the same fastener locations.

For example, type 3 includes an additional door with respect to type 1, and therefore you have two slams that require 2½" bolts.

Figure 120
Type 3 ceiling to wall strap at pocket

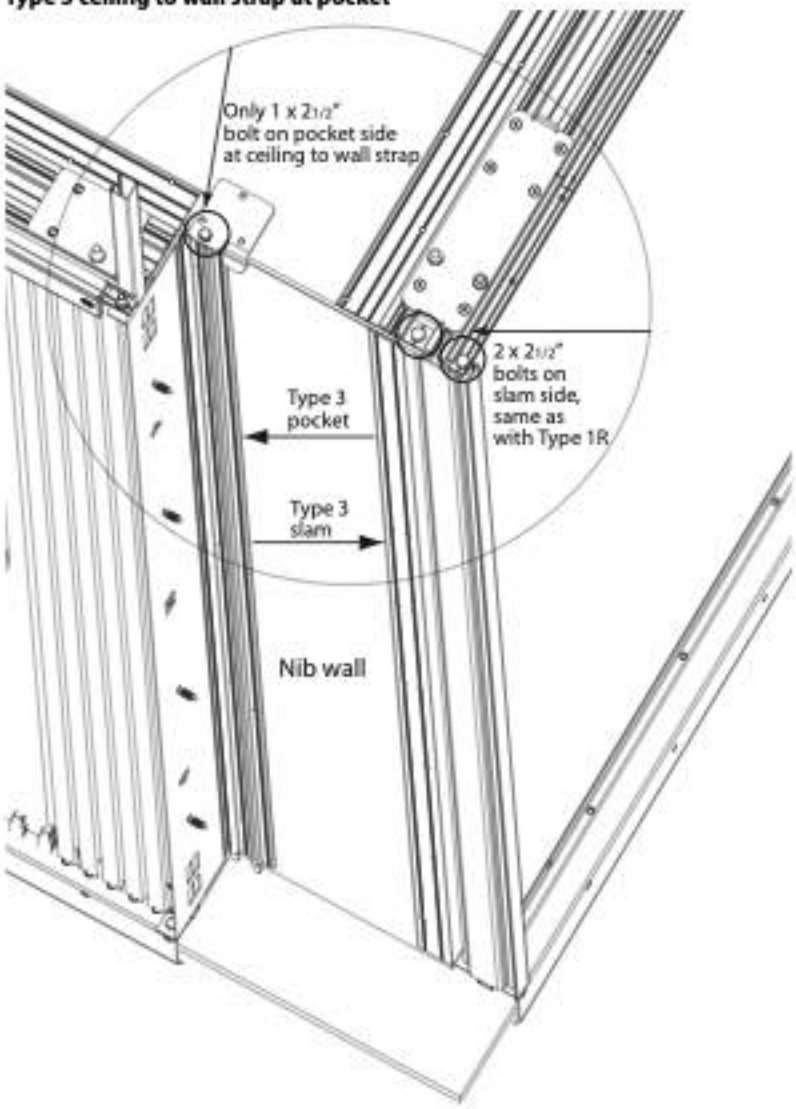

Figure 121
Type 3 floor to wall strap at pocket

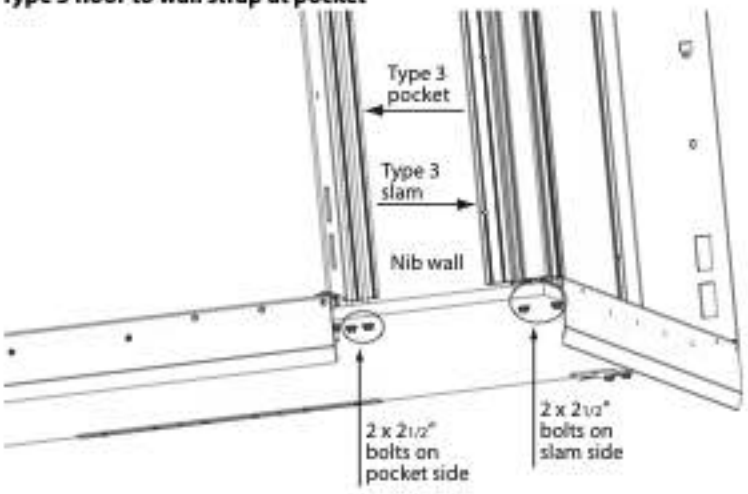

Type 1 right

Instructions in this guide are based on type 1R. Refer to type 1R cab installation instructions in this guide.

Type 1 left

A mirror image of type 1R, used in this guide. Refer to type 1R cab installation instructions in this guide.

Type 2

A combination of type 1L and type 1R.

Type 3

Figure 120 on page 77 and Figure 121 on page 77 both describe the attachments in addition to type 1R.

Type 4

Similar to type 3 but a mirror image.

Type 5 center left hand small

Includes a nib wall, slam pocket, and channel joiner at the pocket. Like type 3, use only one bolt at the pocket from the ceiling to the strapping, and two bolts underneath the floor.

Type 5 center right hand small

A mirror image of type 5 center left hand small.

Type 5 center left

Includes two nib walls, a slam pocket, and one channel joiner per pocket. Similar to type 5 center left hand small except Figure 122 on page 78 and Figure 123 on page 78 are on both sides of the entrance.

Type 5 center right

A mirror image of type 5 center left.

Type 5 left

Includes one nib wall, no slam pocket, and one channel joiner at the pocket. Similar to type 5 center left hand small except Figure 122 on page 78 and Figure 123 on page 78 are on both sides of the entrance.

Type 5 right

Mirror image of type 5 left.

Figure 122
Channel joiner at wall strap and pocket corner top

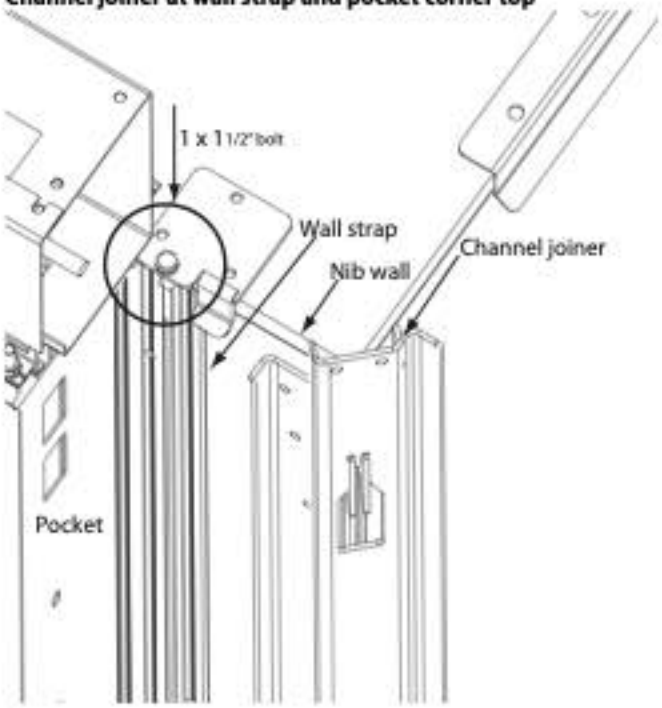

Figure 123
Channel joiner at wall strap and pocket corner bottom



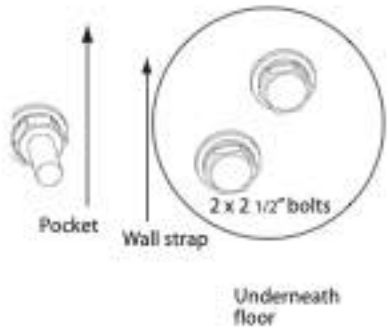

Step 30
Phone installation

Mount the phone box (if equipped) and install the slim corded phone in the cab.

Procedure

1 If the cab has a cutout for a phone box located below the handrail on the COP wall, install the phone box as described.

a. Insert the phone box into the COP wall cutout. Use 8 screws to fasten the box to the 3/4" COP wall through the pre-drilled holes in the box (2 at the top, 2 at the bottom and 2 on each side).

b. Ensure the box is installed far enough in the wall so the door plate is flush against the cab wall.

Figure 124
Phone box



c. Place the phone in the phone box.

d. Feed the phone cord out through the top hole in the phone box, route it to the car top box and plug it into T8 (phone jack receptacle) on the car top board. Tie-wrap the cord as required so it doesn't get pinched when the cab moves.

e. Verify the phone is working.

2 If the cab does not have a cutout for a phone box, you will need to mount the phone directly on the COP wall as described.

a. Determine where you want to mount the phone on the COP wall and drill a hole big enough to feed the phone cord out through the wall.

b. Feed the cord out through the wall.

c. Mount the phone on the COP wall using the screws provided with the phone.

d. Route the phone cord to the car top box and plug it into T8 (phone jack receptacle) on the car top board. Tie-wrap the cord as required so it doesn't get pinched when the cab moves.

e. Verify the phone is working.

IMPORTANT

Do NOT turn over the elevator prior to having an active phone line and having properly tested the phone or automatic dialer phone (as applicable).

Step 31
Car top box

Install the car top box and connect the wiring.

Procedure

1 Mount the car top box on top of the cab as appropriate for your installation using the hardware provided.

NOTE

Install the car top box near an entrance for easier access to activate the car top stop switch and for service.

Figure 125
Car top box

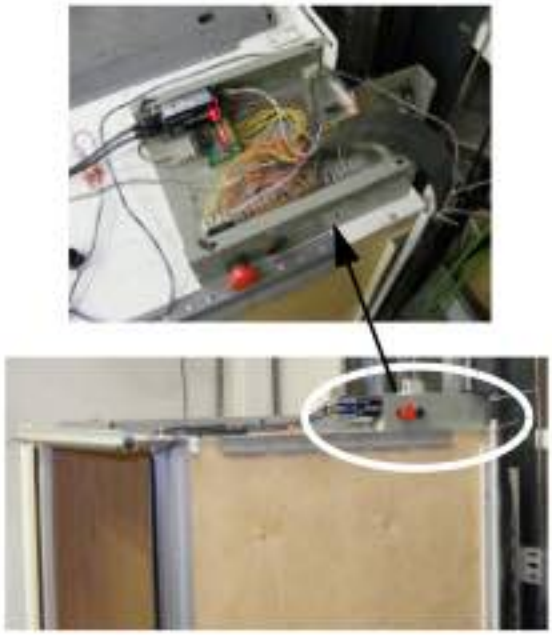

NOTE

The flat traveling cable is standard. The round traveling cable is optional at an additional cost.

NOTE

Be sure to connect the **pre-wired end** of the traveling cable to the car top box.

2 Insert the traveling cable into the car top box through the appropriate cutout. For the standard flat traveling cable, use the clamp pre-installed in the car top box (one on each side) to hold the traveling cable in place.

Figure 126
Clamps in car top box for flat traveling cable

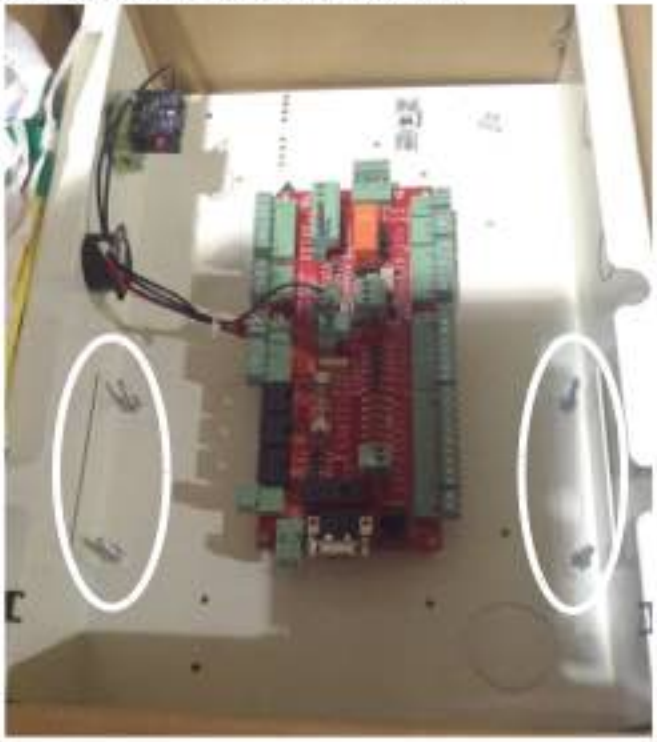

3 Make the following connections to the car top box per the drawing on the next page:
- Pre-wired end of traveling cable to car top box T1, T2, T3, T4, T5, T7
- Tape reader - T6
- Phone - T8
- Fan - T9
- Cab pot-lights - T10
- Car operating panel (COP) - T11, T12, T13
- Selector (tape reader) switches - T14
- Car top stop switch - T15
- Final limit switch - T17, pins 1 and 2
- Slack chain (plank) switch - T17, pins 3 and 4
- Front gate operator - T18 (in a later section)
- Rear gate operator - T19 (in a later section)
- Transformer - T20
- Buzzer - T21
- Aux power - T22

NOTE

Don't forget to connect the cable from J6A on the tape reader selector PCB to J6 on the car top board.

Figure 127
Car top box - automatic connection diagram

AUTO PANEL FOLD
(Gatemate and Bifold 24 Vdc Gate Operator)

LED	Description
LED1	Selector P1 positioning input indicator
LED2	Selector P2 positioning input indicator
LED3	Selector P3 positioning input indicator
LED4	Selector DL (down levelling) input indicator
LED5	Selector UL (up levelling) input indicator
LED6	Selector DZ (door zone) input indicator
LED7	Selector POWER (+24V) indicator

IMPORTANT!
Confirm voltage of gate operator before changing any car top wiring.

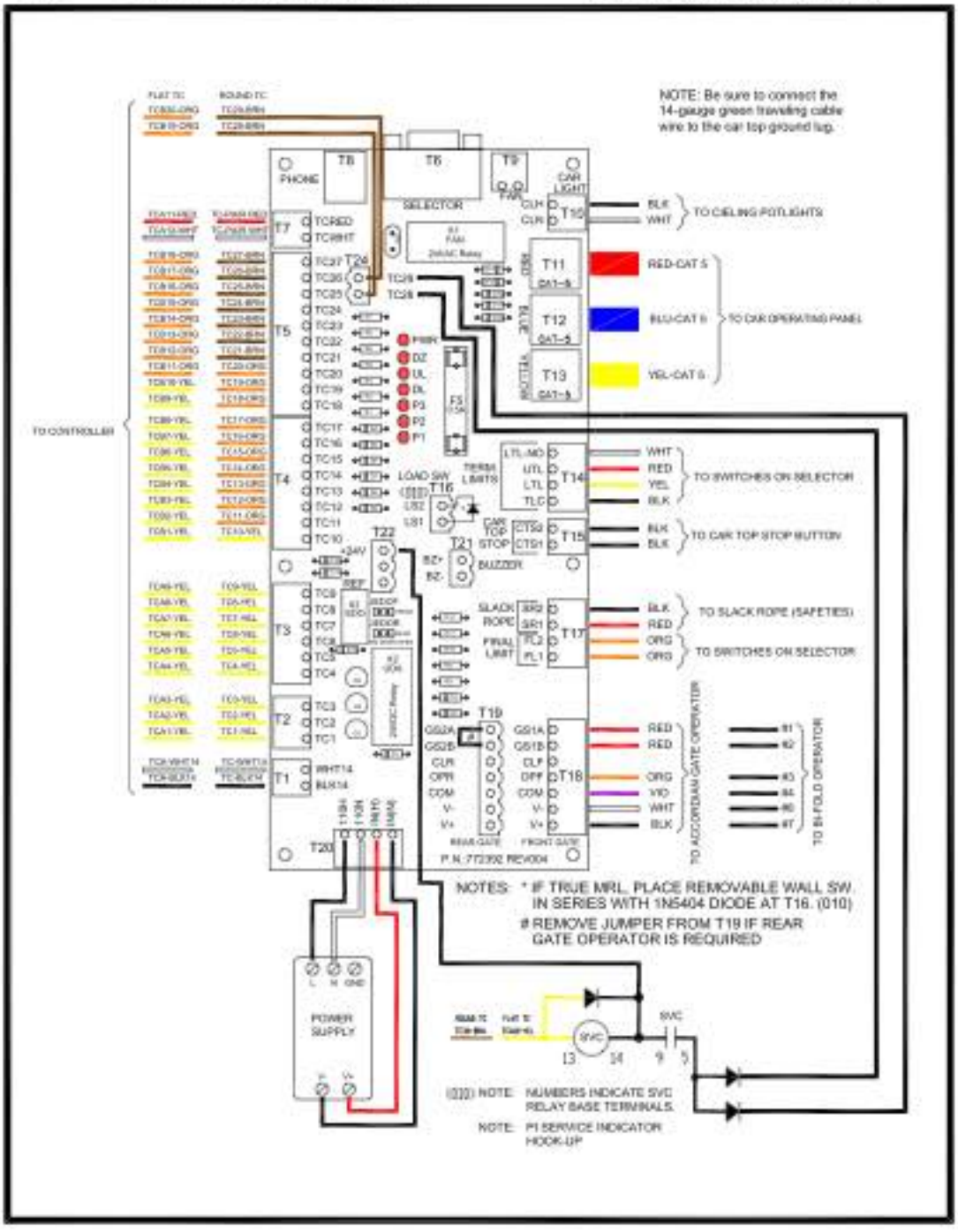

Figure 128
Car top box - manual connection diagram

AUTO PANEL FOLD
(Porta 120 Vac Gate Operator)

LED	Description
LED1	Selector P1 positioning input indicator
LED2	Selector P2 positioning input indicator
LED3	Selector P3 positioning input indicator
LED4	Selector DL (down levelling) input indicator
LED5	Selector UL (up levelling) input indicator
LED6	Selector DZ (door zone) input indicator
LED7	Selector POWER (+24V) indicator

IMPORTANT!
Confirm voltage of gate operator before changing any car top wiring.

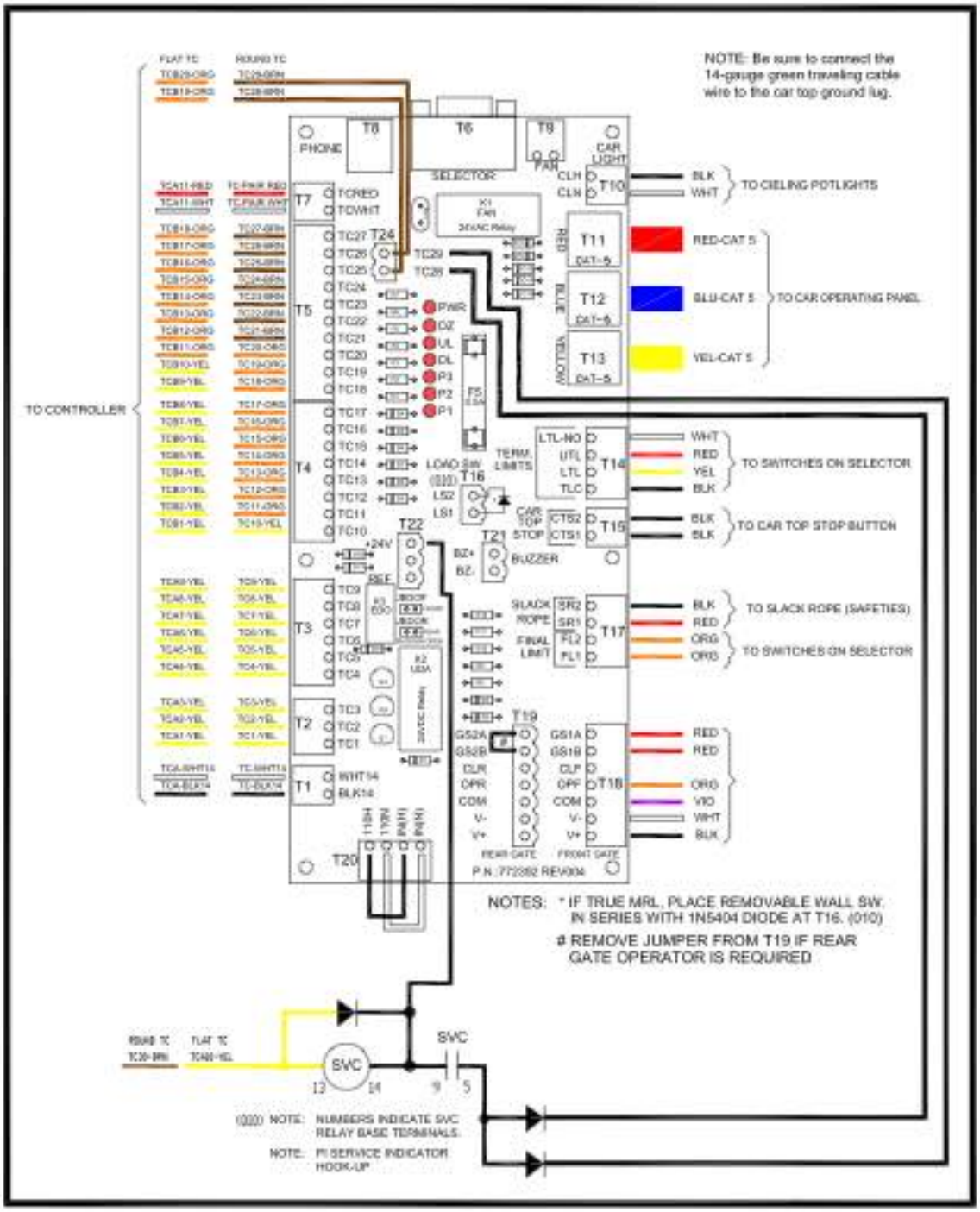

Step 32
Traveling cable connections

This section describes the traveling cable connections from the car top board to the main controller board.

Procedure

NOTE

The flat traveling cable is standard. The round traveling cable is optional at an additional cost. Routing of the traveling cable is always site-dependent. The traveling cable must always be fastened to the hoistway wall 12" to 14" higher than the halfway point of the travel (not including overhead from the top landing or pit depth.

⚠ CAUTION

Be very careful during installation of the traveling cable. Using the pendant slow speed function, move the cab up and down the full length of travel to verify that the traveling cable does not get caught in the cab.

FOR FLAT TRAVELING CABLE (STANDARD)

1 For the standard flat traveling cable, use the clamping wedge blocks (part no. 207121), the under-cab cable bracket and tension bracket to provide strain relief and guidance for the cable from the car top box to the controller box.
   a. Route the traveling cable from the car top box to the underside of the cab platform.
   b. Attach the traveling cable to the underside of the platform using the under-cab cable bracket. Secure the under-cab cable bracket to the bottom of the platform using #10 1/2" wood screws. Leave a large loop of cable at the point where the traveling cable exits the under-cab cable bracket. The loop must be large enough to accommodate the full up and down travel of the elevator.
   c. Insert the cable under the clamping wedge block (part no. 207121).
   d. To support the load of the cable, install the tension relief bracket on the hoistway wall 12" to 14" higher than the halfway point of travel (not including overhead from the top landing or the pit depth).
   e. Ensure that when the elevator is run to the top floor, there is at least 12" (305 mm) of cable hanging below the tension relief bracket and a gentle bend connecting to the cable. With the elevator at the bottom landing, ensure that the cable is not too tight and is not rubbing on the side of the platform or piling up on the pit floor. If the cable is not installed properly, short cable life will result.

Figure 129
Clamping wedge block (p/n 207121) for flat traveling cable



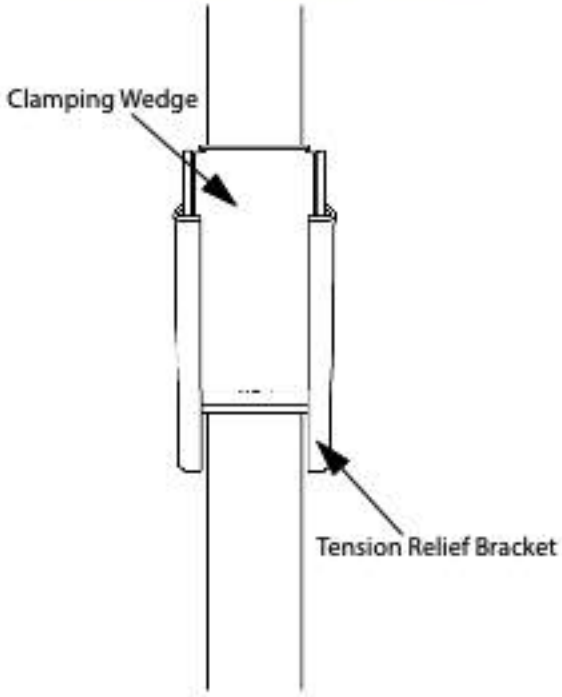

⚠ WARNING

Be sure to connect the 14-gauge green traveling cable wire to the chassis ground lug in the controller box. Be sure to connect the 14-gauge green traveling cable wire to the car top ground lug.

FOR ROUND TRAVELING CABLE (OPTIONAL)

2 For the optional round traveling cable, install the wire mesh system to provide strain relief and guidance for the cable from the car top box to the controller box.

Figure 130
Wire mesh system for round traveling cable

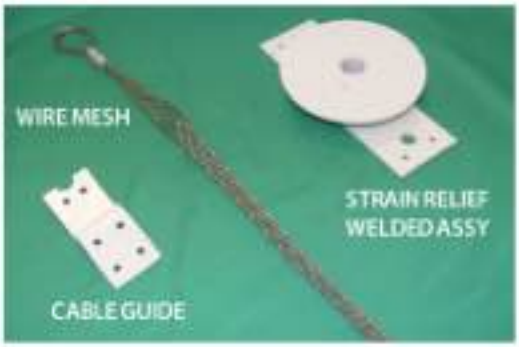

a. Install the cable guide bracket (part no. 229992) on the cab where the cable exits the car top box. Place the cable loop of the wire mesh over the top of the cable guide and feed the round traveling cable down through the mesh tube.

b. Tie-wrap the traveling cable to the cable guide bracket through the two holes in the top of the bracket.

c. Position the cab level at the lower landing.

d. Install the strain relief welded assembly (part no. 229996) on the hoistway wall 12" to 14" higher than the halfway point of travel (not including overhead from the top landing or the pit depth).

e. Loop the round traveling cable over the strain relief welded assembly (mounted on the hoistway wall) until the bottom loop of the cable is 1" off the pit floor. Note that the attachment point on the car top must be on the same side of the wall hanger as the active side for a proper loop.

Figure 131
Routing of round traveling cable using wire mesh system

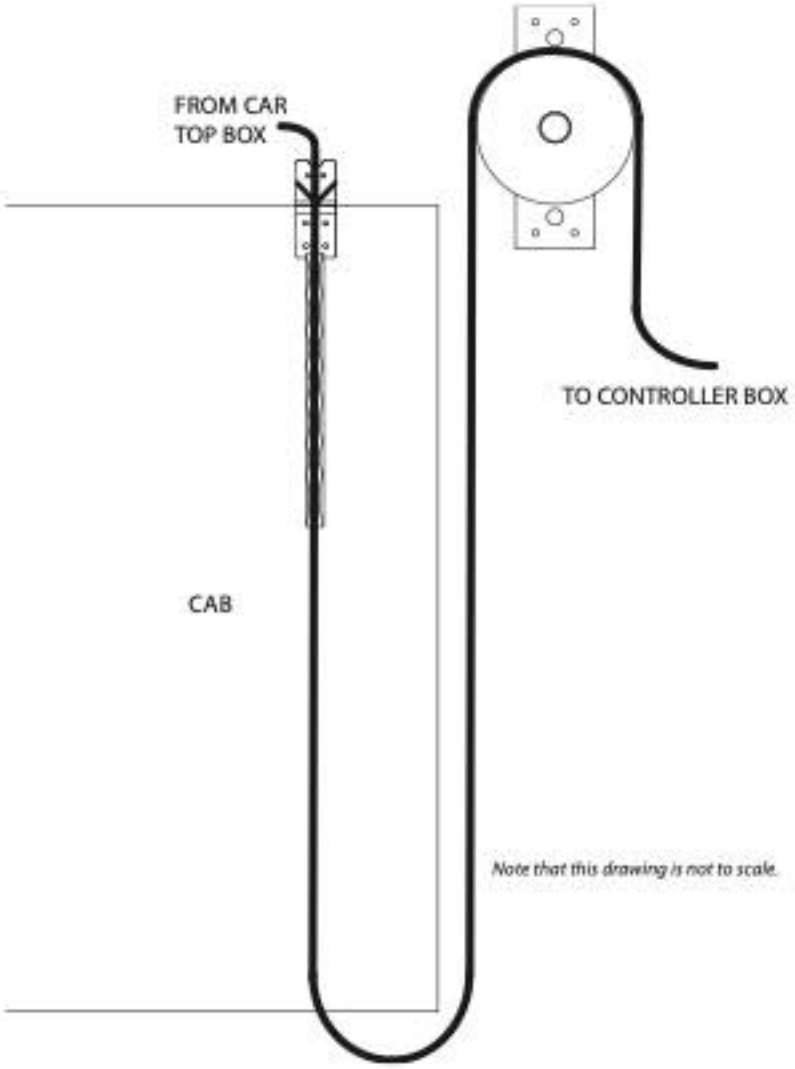

3 Route the traveling cable to the controller box.

4 Remove the temporary jumpers from J13 on the controller board.

IMPORTANT

There are jumpers pre-installed on J13 (TC10-13-15-17) so the elevator will start in temporary mode. Once these jumpers are removed and the traveling cable is connected, the lift will automatically reset (if power is cycled off then on again) by running to the bottom landing if the safety circuit/car gate/door locks are jumped out or closed.

5 Connect the controller end of the traveling cable to the connectors (J15, J14, J13, J10, J9 and J3-IN1) on the controller board as shown in Figure 117.

- TC27 can also connect to J3 on the right side of the controller board.
- The TC white and black wires terminate at J6 on the top of the controller board.

6 Set the GEAR / HYDRO switch at SW1 up to GEAR.

⚠ WARNING

Be sure to connect the 14-gauge green traveling cable wire to the chassis ground lug in the controller box. Be sure to connect the 14-gauge green traveling cable wire to the car top ground lug.

Figure 132
Traveling cable connections to main controller board

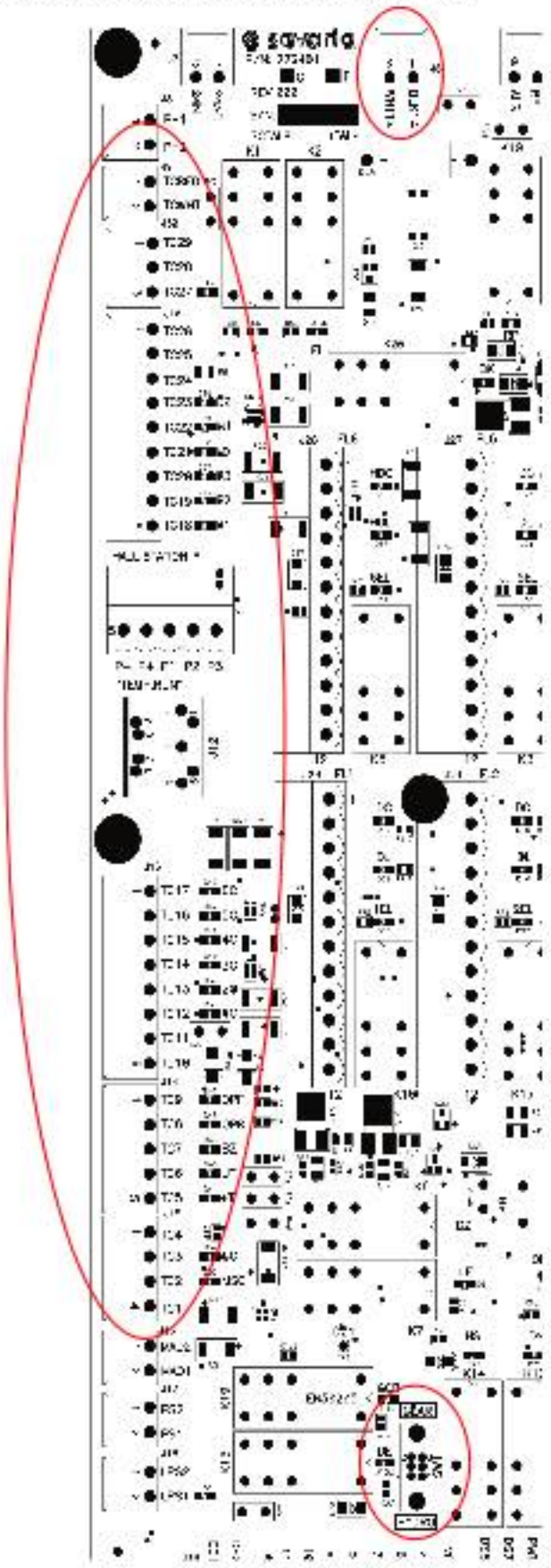

Step 33
Gate pocket assembly

Attach the gate pocket to the sill and track.

Procedure

1 Insert the pocket onto the sill and fasten in the order shown below.

Attach with pre pack 226660

1) 1 x $\frac{1}{4}$" - 20 x 1$\frac{1}{2}$" hex head bolt 1 x $\frac{1}{4}$" lock washer	2) 2 x $\frac{1}{4}$"-20 x $\frac{1}{2}$" phillips head screw 2 x $\frac{1}{4}$" lock washer 2 x $\frac{1}{4}$" nut 3) 4 x phillips head screw

Figure 133
Pocket on sill

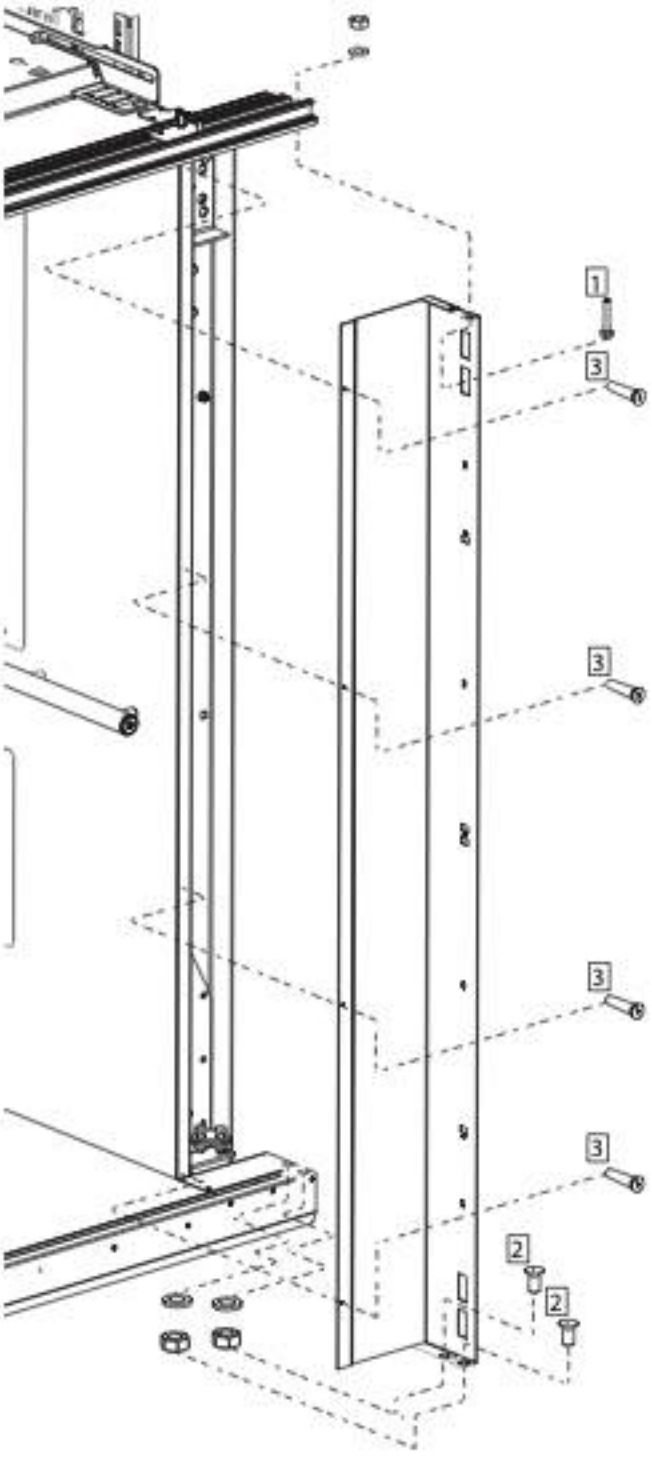

Step 34
Gate assembly

Attach the cab gate to the pocket. For Enterprise gate, go to page 86.

Procedure

1 Disassemble the two screws at the top front of the gate track on the slam side and remove the corner piece.

Figure 134
Gate track corner piece location

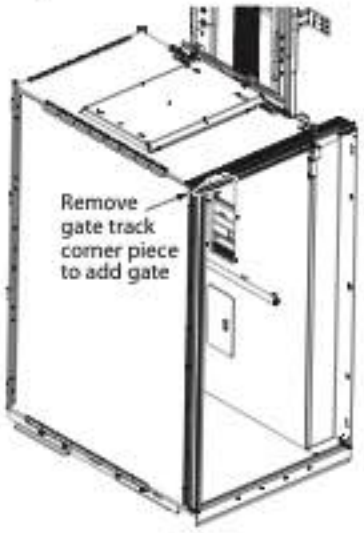

Figure 135
Gate track corner piece

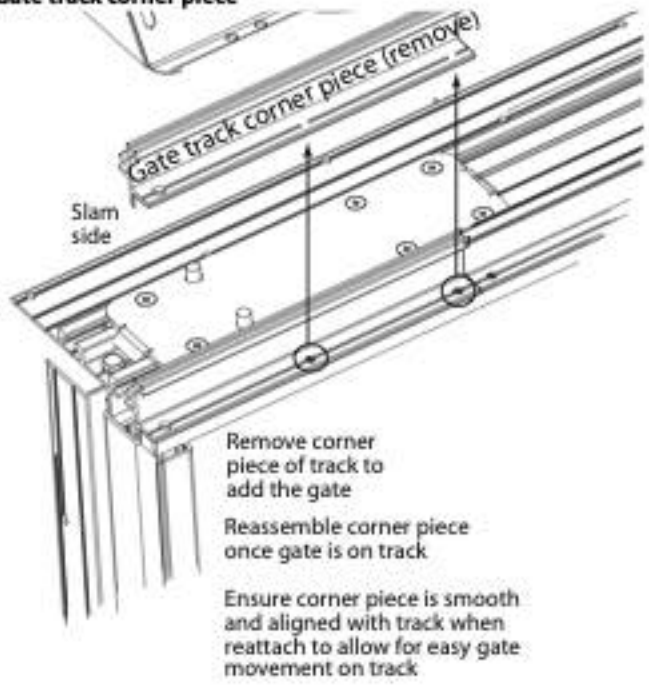

Disassemble...

2 x $\frac{3}{8}$" screws

2 Remove the screws along the track to partially pull out the plastic insert.

Figure 136
Gate track plastic insert

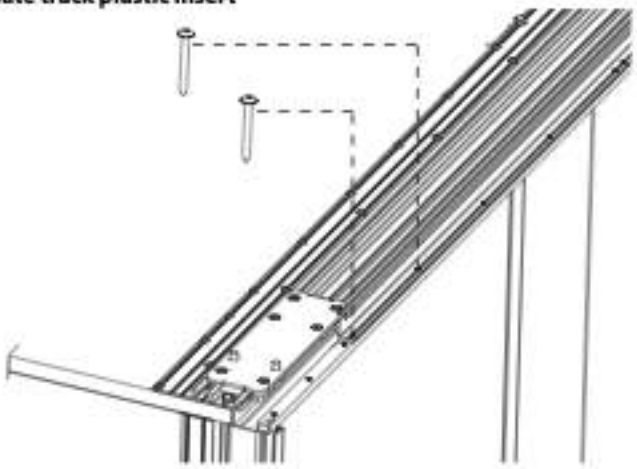

3 Partially pull out the plastic insert from the top of the gate track.

Pull out to insert the gate onto the track.

Figure 137
Plastic insert

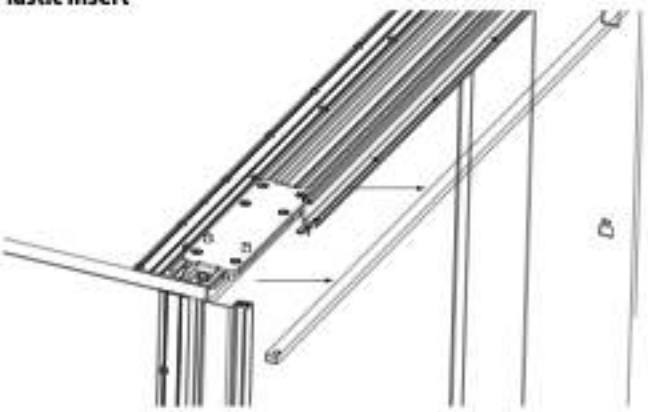

4 Remove the large track mounting plate, if equipped, to help with gate installation.

Figure 138
Remove large track mounting plate

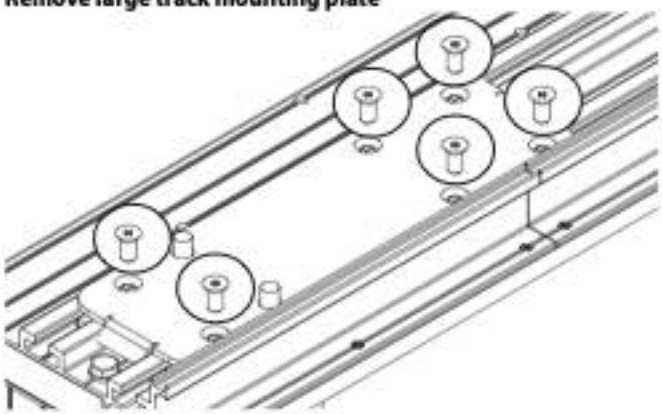

5 Place the gate onto the track at the corner piece area and slide to the pocket side.

Figure 139
Gate on track

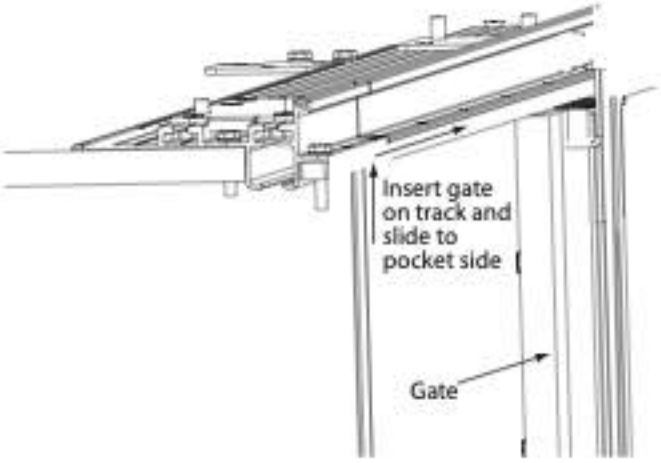

6 Place the large mounting plate, if equipped, back onto the gate track. See Figure 138 on page 87.

7 Put the plastic insert back onto the track. See Figure 137 on page 87 and Figure 136 on page 87.

8 Reassemble the screws and corner piece to the top of the track. See Figure 135 on page 87.

9 Place the flanges into the gate holes.

Figure 140
Flange part no. 106151

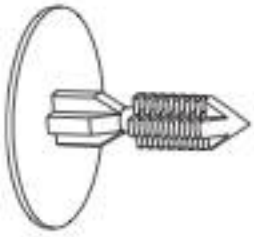

10 Push the gate into the pocket.
The flanges insert into the pocket holes. There is no other attachment necessary for the gate to attach to the pocket.

11 Be sure to attach the magnet plate for the gate on the slam side.

Figure 141
Flanges into gate

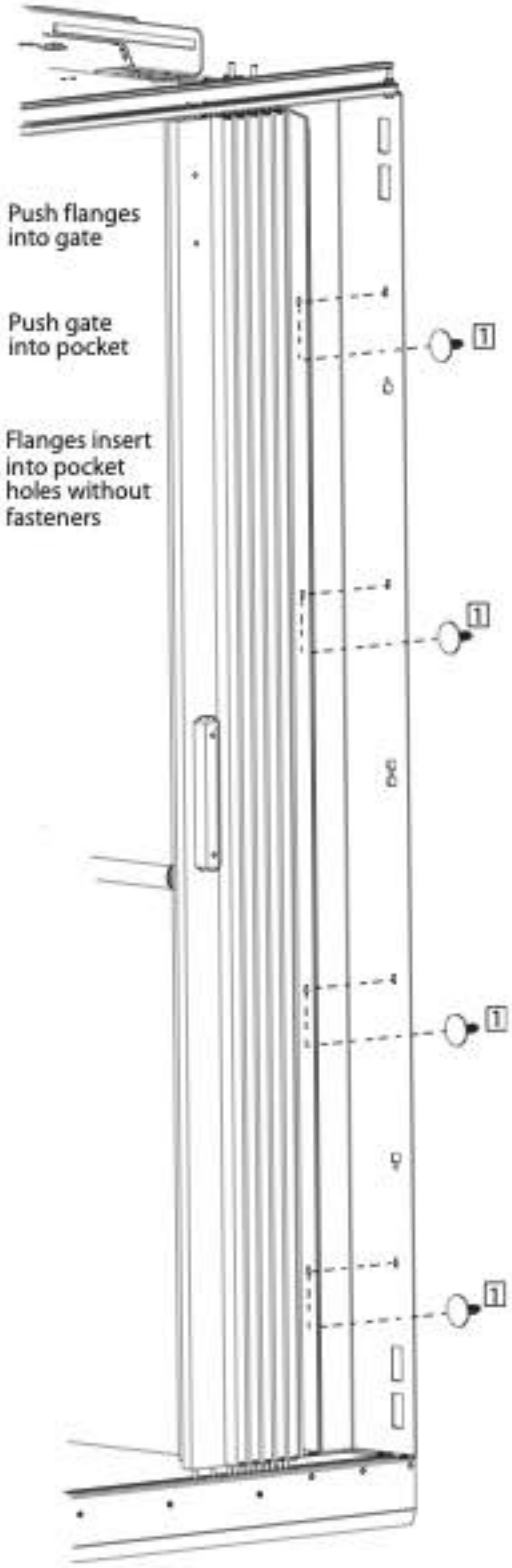

12 Place the gate stabilizer bar onto the gate track at the gate track corner piece area and slide to the pocket side.

Figure 142
Stabilizer on gate track

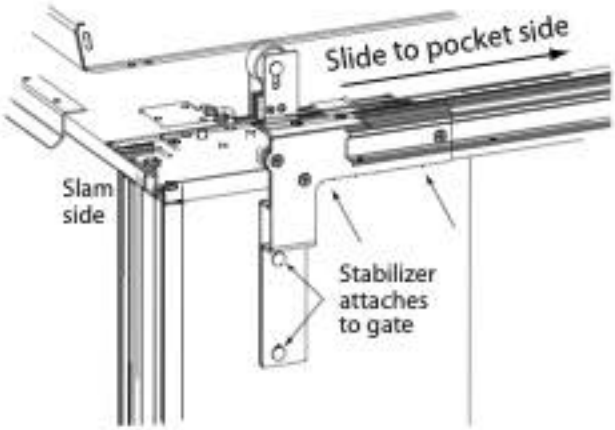

13 Assemble the stabilizer bar to the gate.

Figure 143
Gate attachment to stabilizer

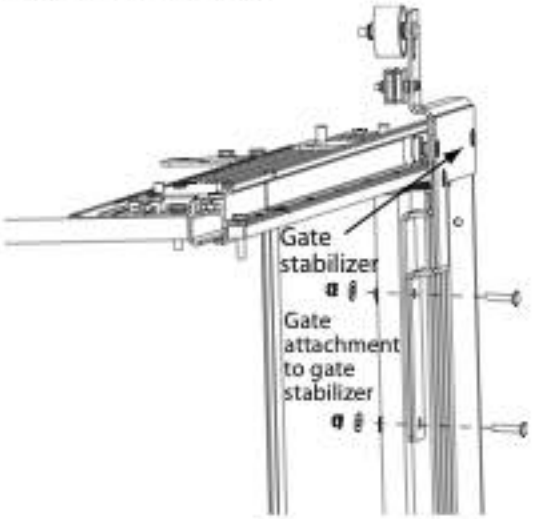

Attach with pre pack 226442

2 x $\frac{1}{4}$" - 20 x $1\frac{1}{4}$" carriage bolts

14 Reattach the front gate track corner piece. Refer to Figure 135 on page 87.

15 Assemble the ceiling corner at the slam side.

Figure 144
Ceiling to slam

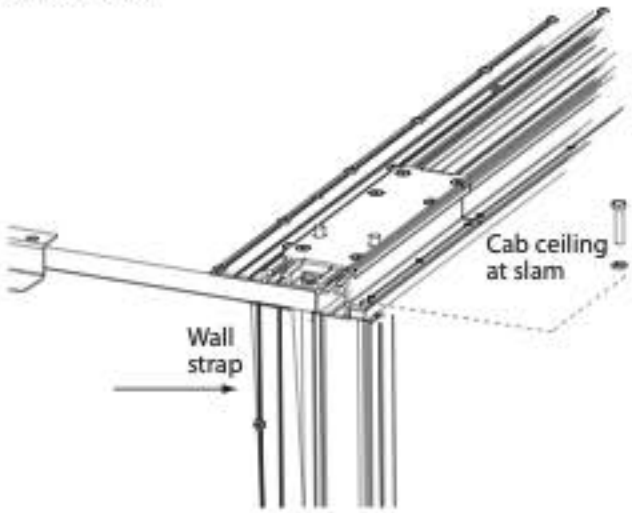

Attach with pre pack 226660

2 x $\frac{1}{4}$"-20 x $2\frac{1}{2}$" hex head bolts
2 x $\frac{1}{4}$" lock washer

16 Attach the floor support bracket to the floor. Refer to Figure 106 on page 72.

TO ASSEMBLE THE ENTERPRISE GATE

1 Line up and tighten all gate rollers.
2 Remove the gate track from the ceiling.
3 Load the gate into the sill track.
4 Slide the ceiling gate track onto the gate rollers.
5 Tilt the gate and track up to the ceiling.
6 Reinstall the track bolts to secure it to the ceiling.
7 The pocket should have pre-drilled holes (top and bottom) for through bolts. Bolt through the fixed post with the threads through the pocket, and then install washers and nuts from the car top and from under the platform.

Figure 145
Install Enterprise gate

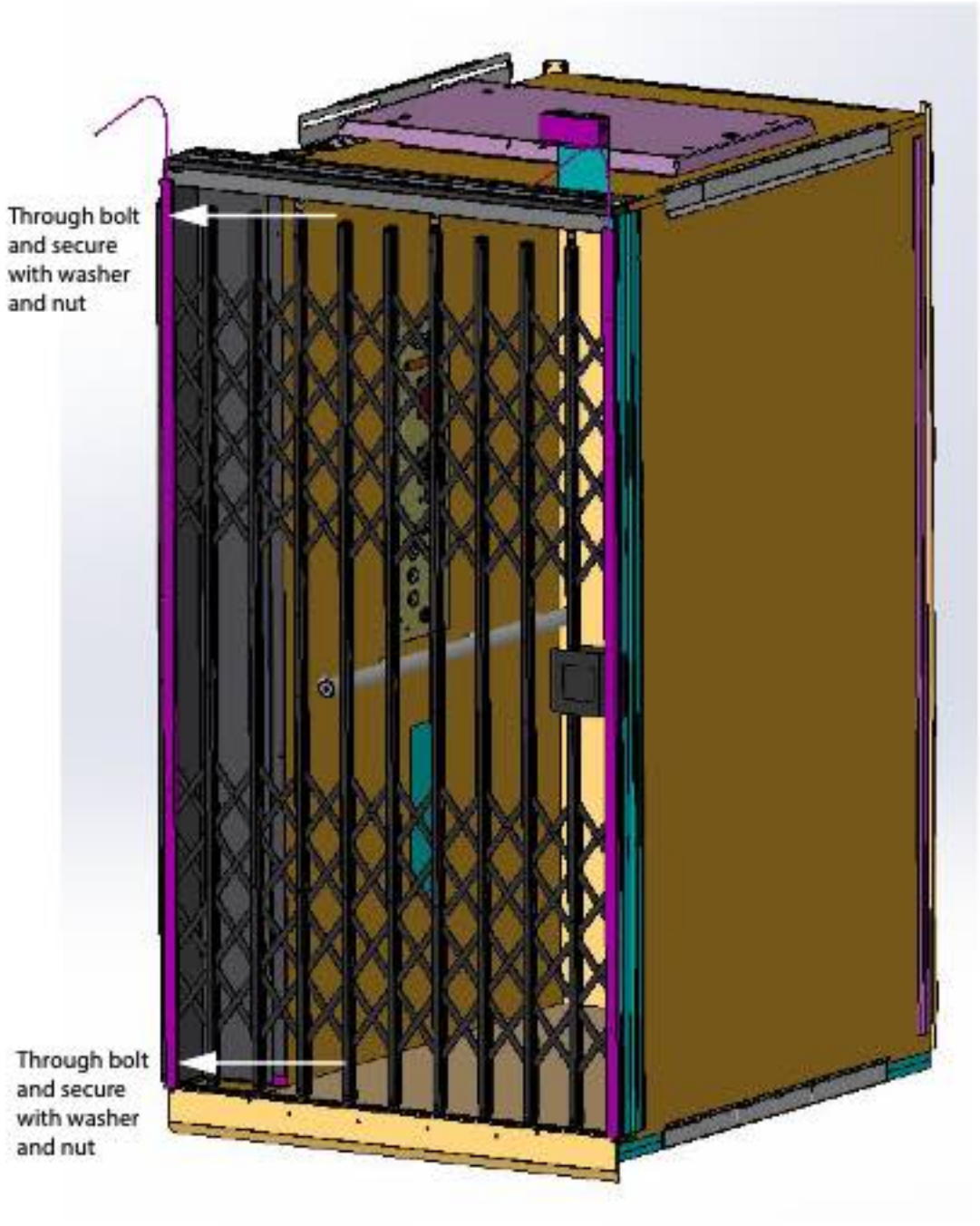

Step 35
Gate operator (Porta or Savaria Gatemate)

Attach EITHER the PORTA gate operator or the Savaria GATEMATE operator.

Considerations

If installation includes an automatic gate closer, you'll have either a left-hand or right-hand operator:
- 226142 - left hand (Porta) or 226143 - right hand (Porta)
- 227700-LCHN - left hand (Gatemate) or 227700-RCHN - right hand (Gatemate)

Figure 146
Gate operator right hand

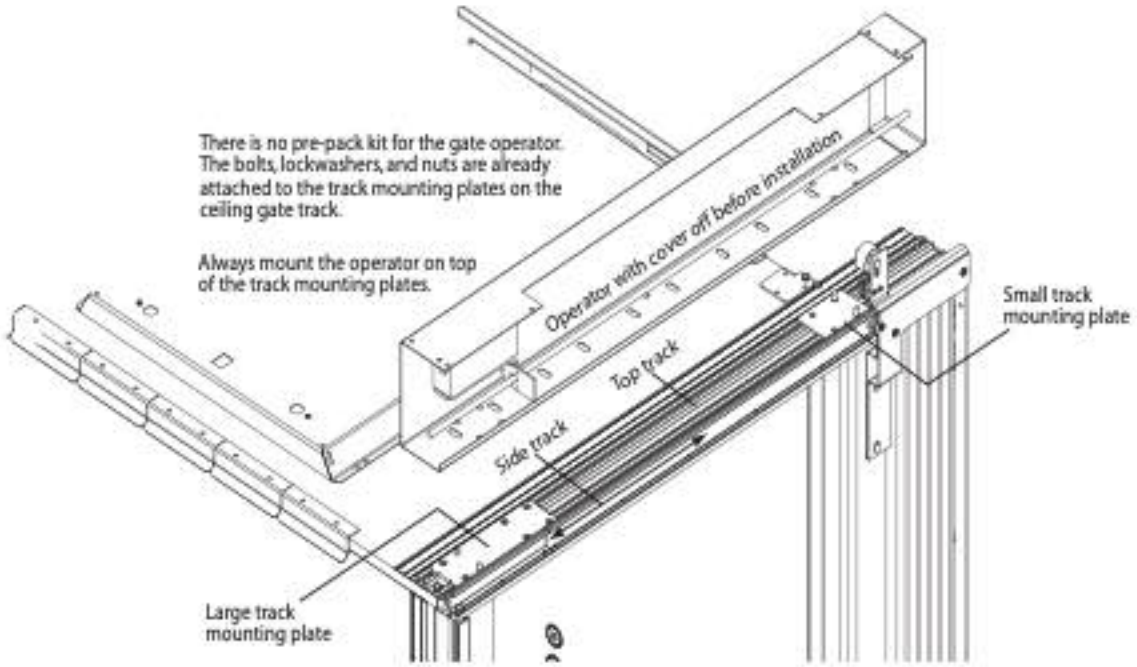

Procedure

1 Ensure the gate can manually slide across the track without friction.
2 Remove the cover from the operator.
Loosen the screws and pull the cover off of the operator body.

Figure 147
Operator cover removal

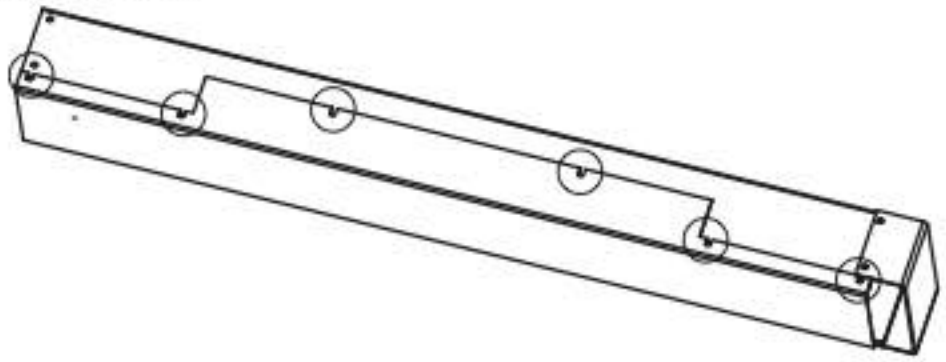

3 Detach the nut and lock washer from the two pem stud bolts on the large and small mounting plates on the cab ceiling track.

Remove with...
4 x $\frac{5}{16}$" hex nut
4 x lock washer

4 Place the operator on the top track through the pem stud bolts and carriage bolts. Ensure the distance from the center of the pem stud bolts to the edge of the track is $3\frac{1}{8}$".

Figure 148
Place operator on track

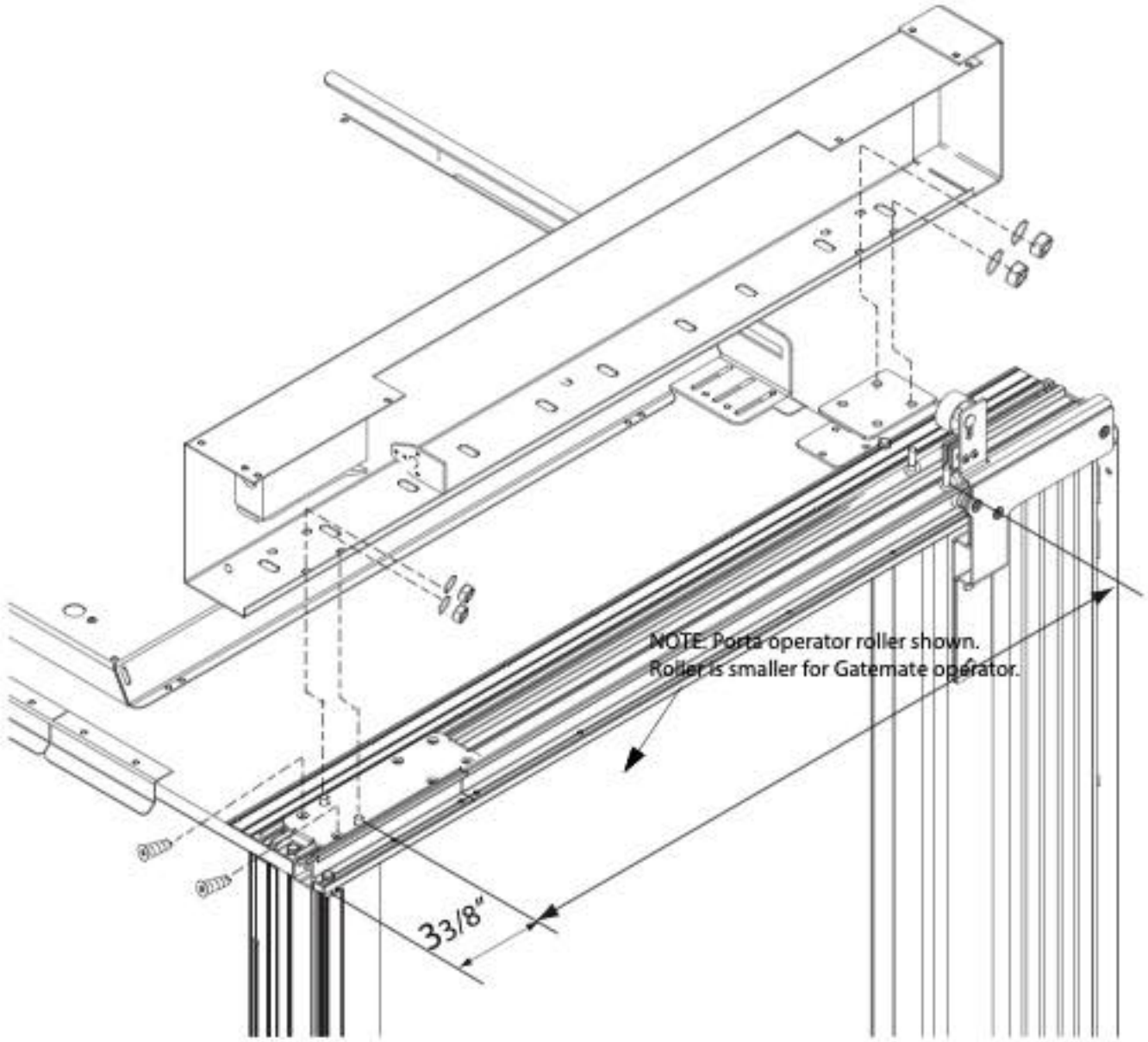

5 Ensure the operator overhangs the slam side of the cab by $\frac{3}{4}$".

Figure 149
Operator overhangs cab

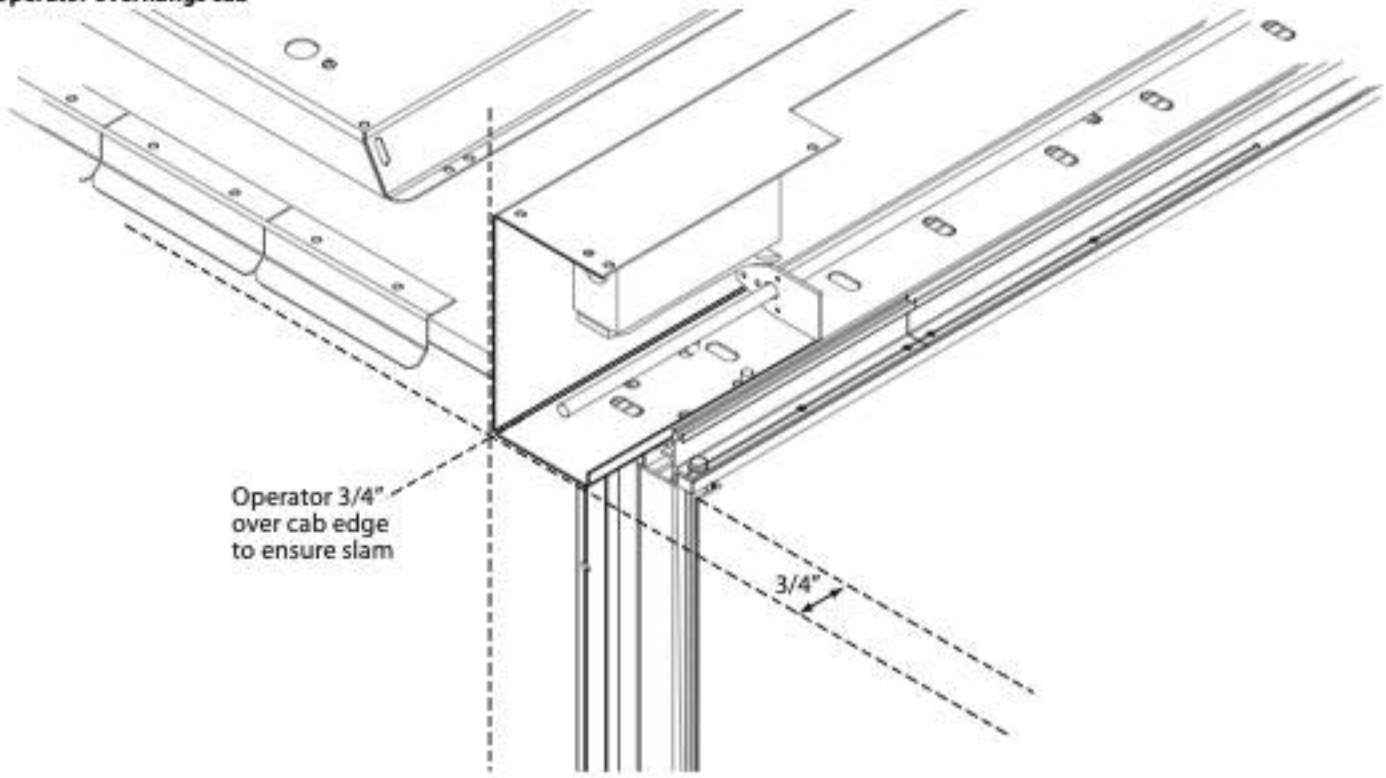

6 If the operator does not overhang the slam side of the track and cab, remove the operator to adjust the large and small track mounting plates as required.

a. Loosen or remove the screws from the large mounting plate.

b. Slide the large mounting plate along the track to adjust.

Figure 150
Large mounting plate adjustment on track

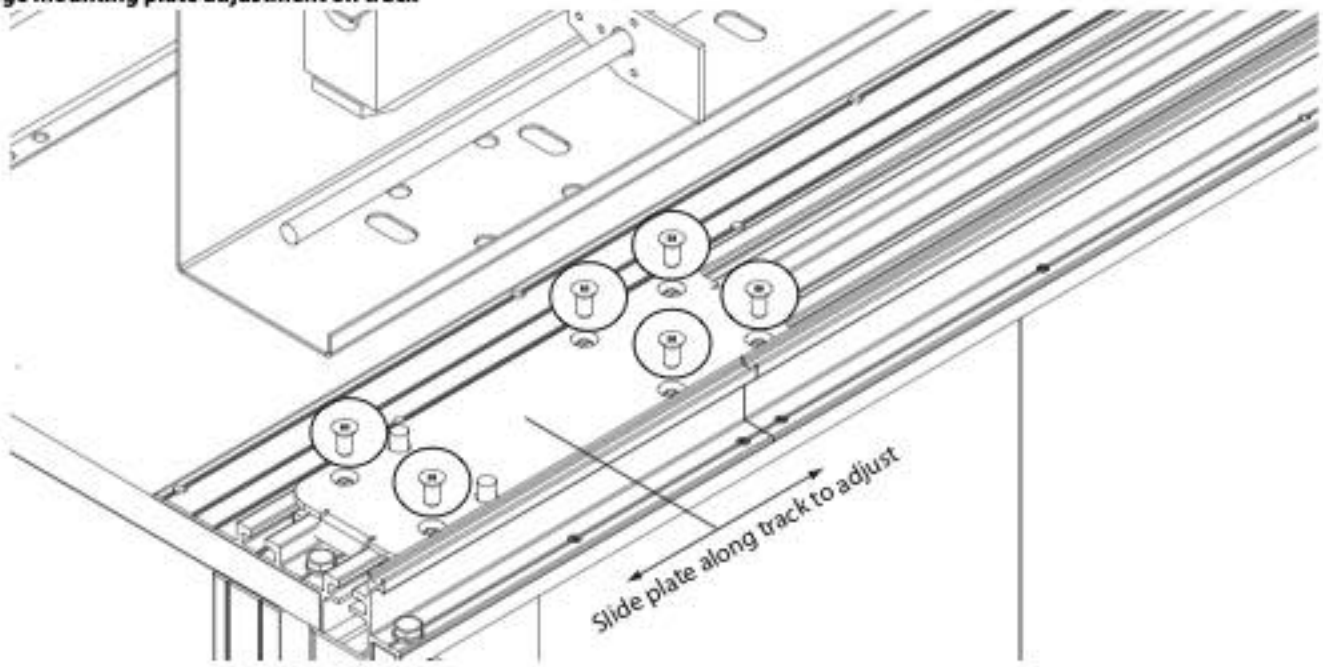

c. If the large mounting plate does not move along the track, remove the plate from the track and slide the pem stud bolt brackets to adjust.

Figure 151
Pem stud brackets

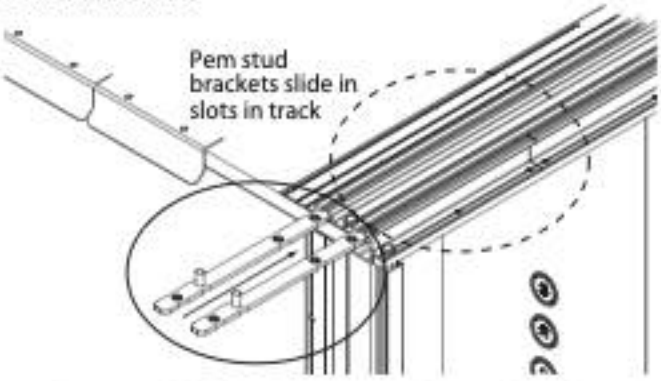

d. Reattach the large mounting plate to the track over the pem stud bolt brackets.

e. Slide the small mounting plate along the track to adjust.

Figure 152
Small mounting plate adjustment on track

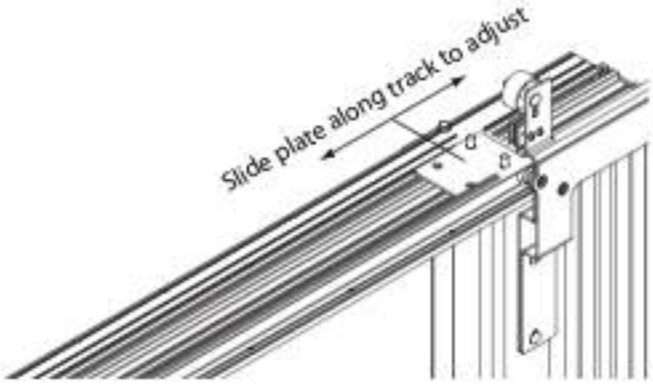

f. Place the operator back on the track and ensure it is flush on the slam side. Refer to Figure 149 on page 93.

7 Tighten the pem stud bolts and carriage bolts with the lock washers and nuts.

8 Attach the floor support bracket 226608 to the cab floor on the gate opening side at the rail once the cab wall assembly is complete.

Figure 153
Floor support bracket

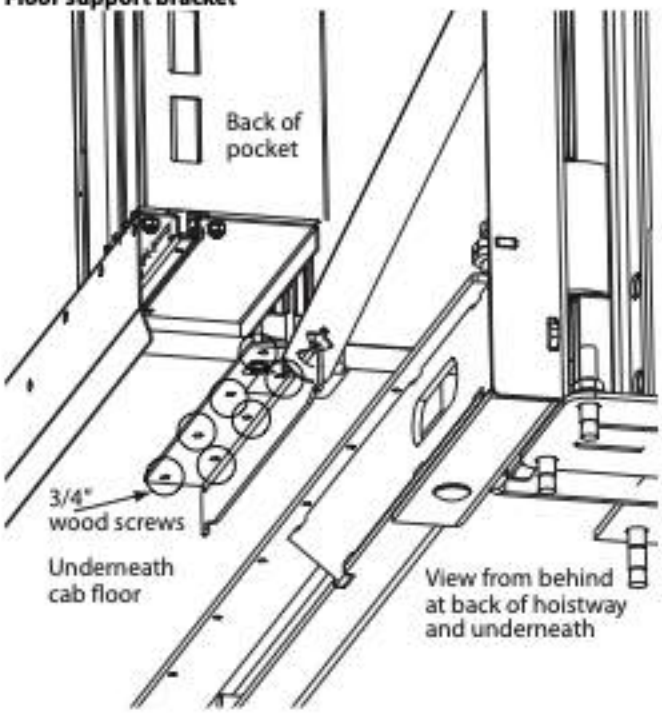

Step 36
Gate operator wiring

Wire the operator (either Porta or Gatemate) to the car top box.

Procedure

1 The operator wiring harness feeds through the grommet hole at the back of the operator.

Figure 154
Wires through grommet hole

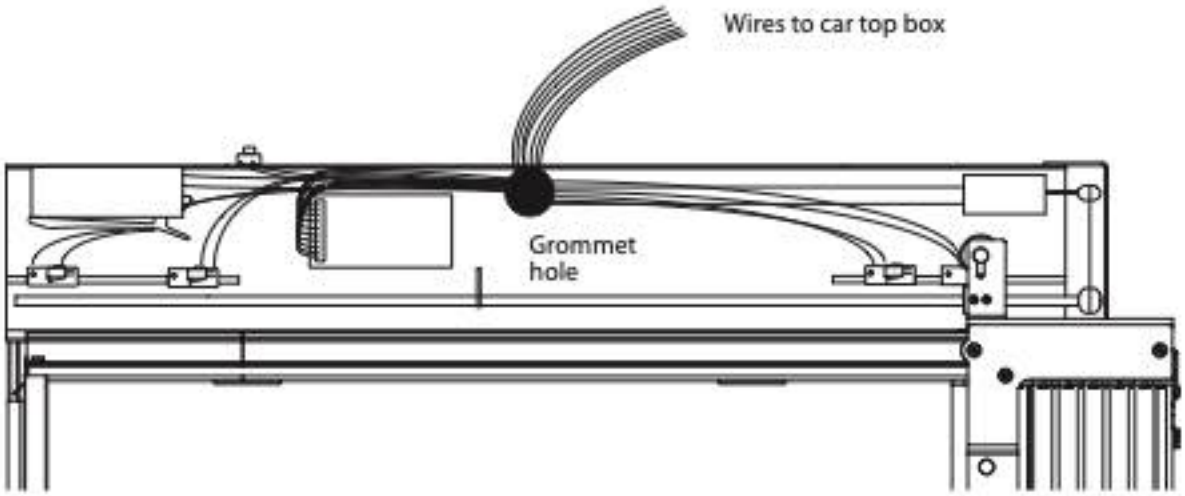

2 Connect the gate operator wires to the car top board at either T18 (for the front operator) or T19 (for the rear operator). *See the Electrical Schematics for more information.*

3 Tie off any extra wire leading from the operator to the car top board.

Step 37
Gate operator board and limit switches

Adjust the operator board and limit switches to allow for gate open and close operation.

Procedure

1 Power on the operator using the power **ON/OFF** switch.

Figure 155
Operator ON / OFF switch

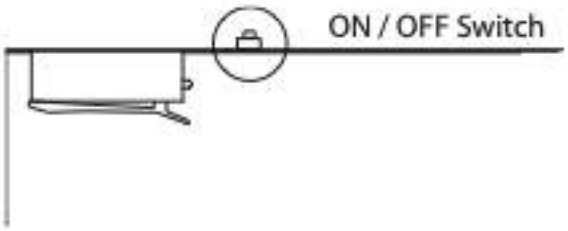

2 Check that the operator board power LED is **ON**.

Figure 156
Operator board Power LED

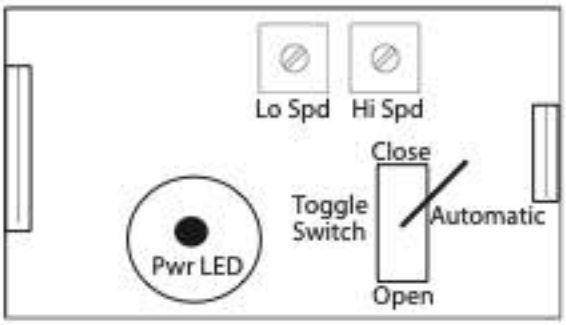

3 Push the gate until the gate stabilizer bar magnets contact the operator plate.

Figure 157
Gate stabilizer magnets contact at operator plate

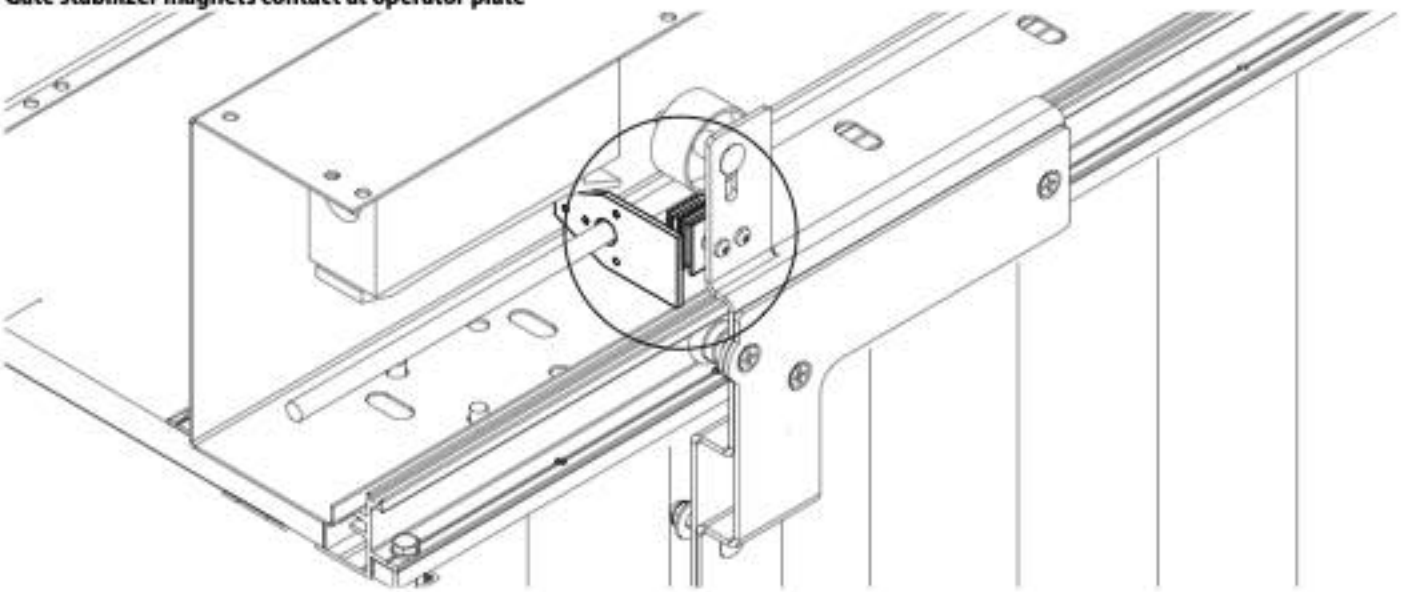

4 Adjust the limit switches (open and close) and the slow speed limit switches. Move the slam side final limit switch so it is vertically flush with the door slam.

Be sure to set the switch contact point (open/close) button so it is flush with the slam.

Figure 158
Final limit switch vertically flush with slam

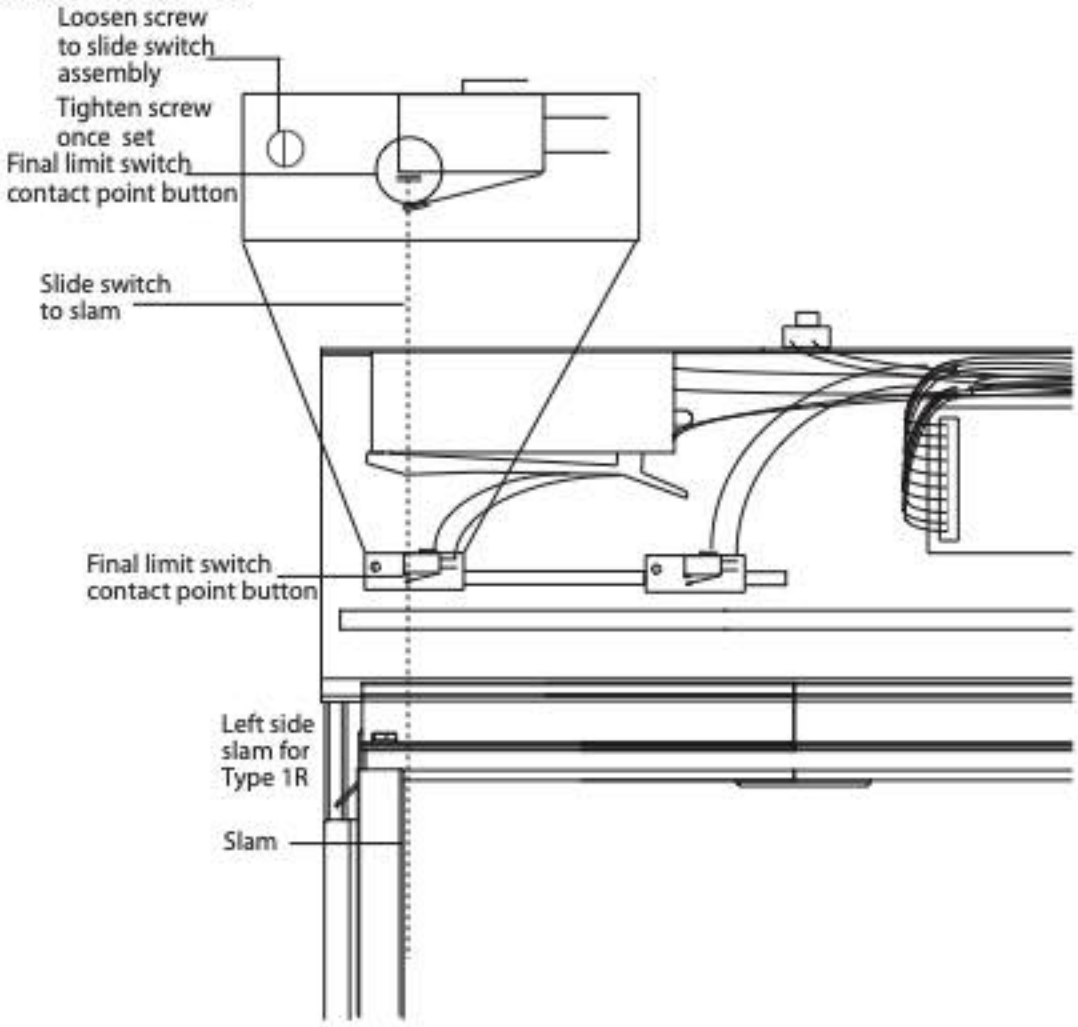

5 Slide the pocket side final limit switch contact point button so it is vertically flush with the wall at the pocket.
Be sure to set the switch contact point (open/close) button so it is flush with the wall at the pocket.

Figure 159
Final limit switch contact point button vertically flush with wall at pocket

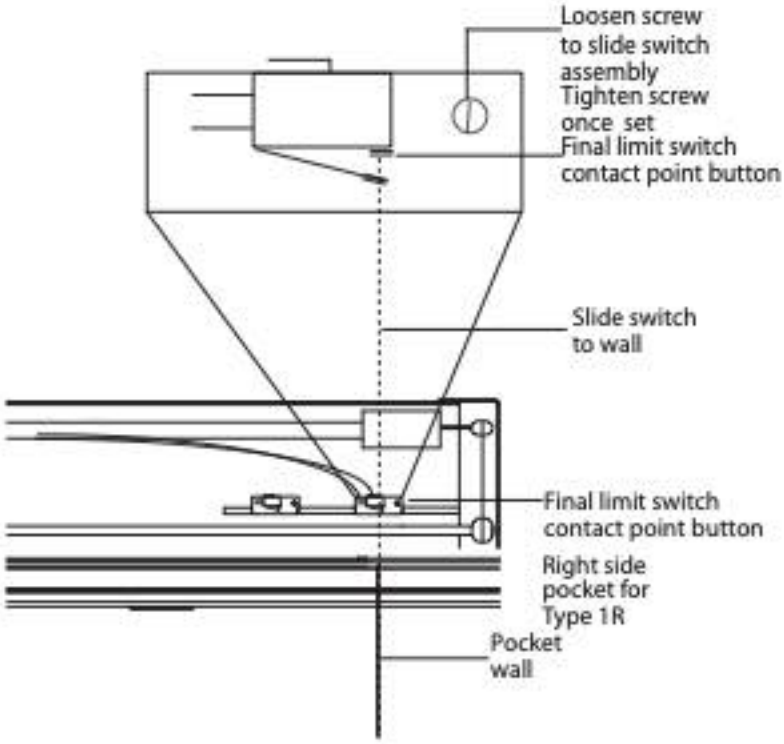

6 Slide the slow limit switches on each side to approximately six inches from the final limit switches.

Figure 160
Slow limit switches

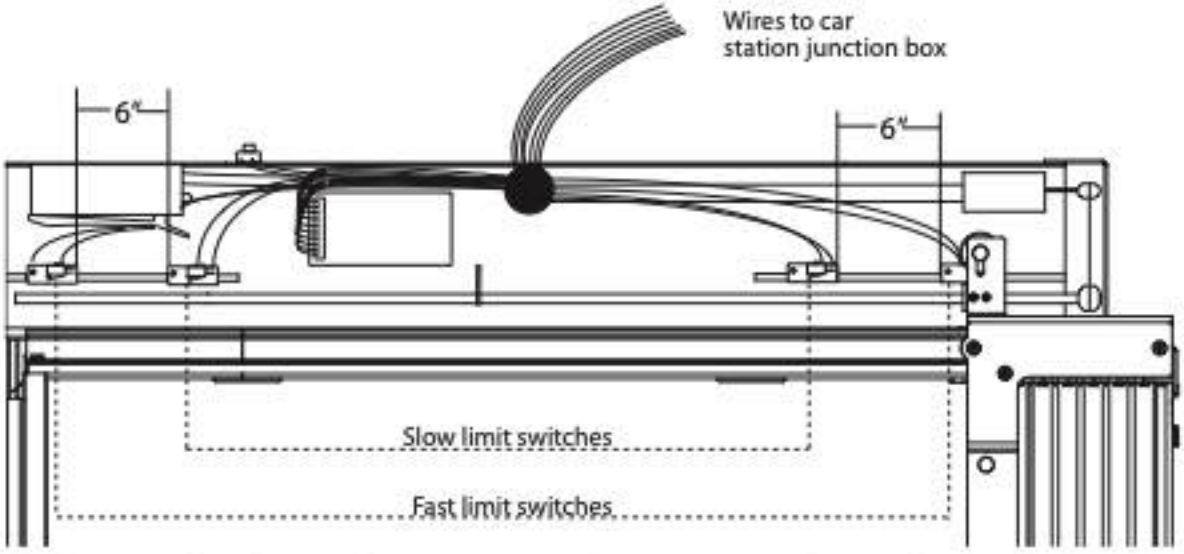

7 Flip the operator board Open/Close/Automatic switch to **CLOSE** to test the gate close into the slam.
The gate should close completely.

8 Flip the operator board Open/Close/Automatic switch to **OPEN** to test the gate open into the pocket.
The gate should open until it is flush with the cab wall at the pocket.

Figure 161
Operator board toggle switch

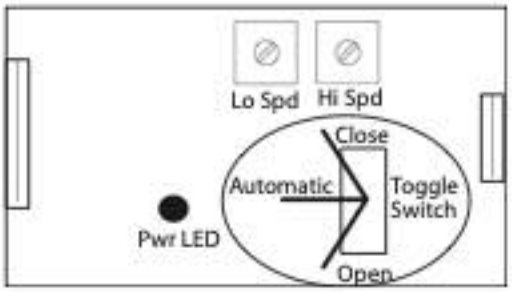

9 Adjust the POTs on the operator board as required for either more or less *high* speed, or more or less *low* speed.

Turning the low speed POT counterclockwise ensures the low speed is slower.
Turning the hi speed POT counterclockwise ensures the high speed is slower.
Turning the low speed POT clockwise ensures the low speed is faster.
Turning the hi speed POT clockwise ensures the high speed is faster.

Figure 162
Operator board POTs

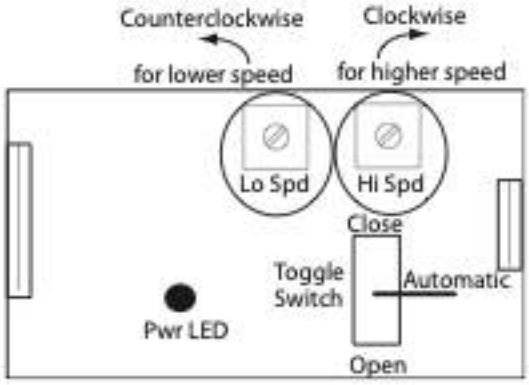

10 Once the *slow-* and *high-* speeds are set with the manual toggles for *open* and *close*, switch to **AUTOMATIC** for normal operation.

11 Run the elevator up and down with the COP buttons to ensure the operator opens and closes the gate correctly in automatic mode.

12 Reinstall the cover.

Figure 163
Operator cover

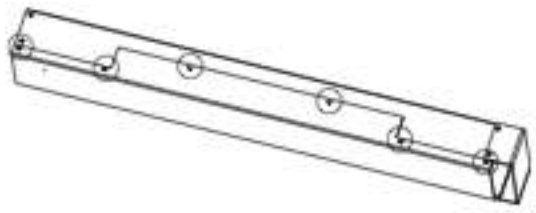

Figure 164
PORTA operator board

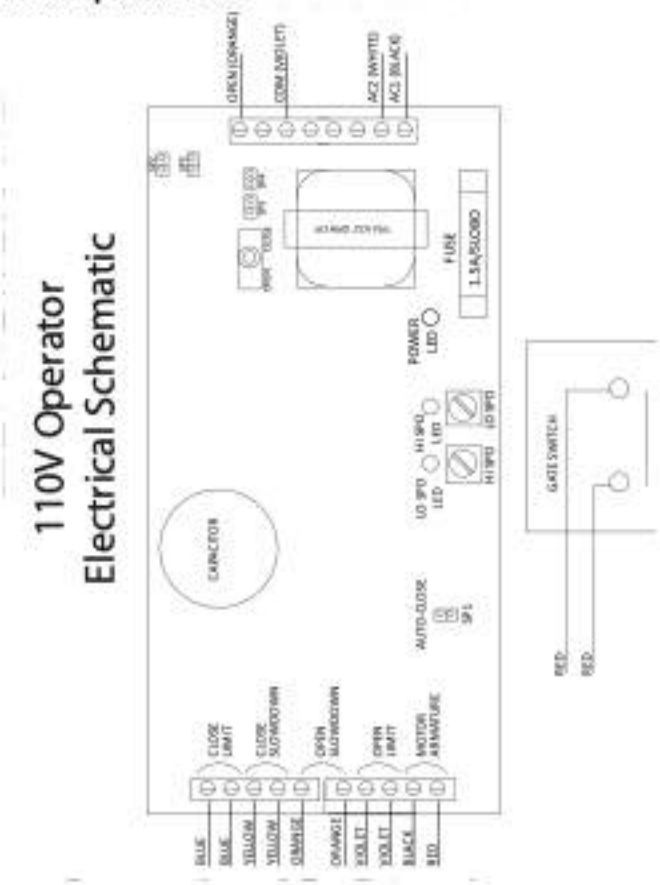

Figure 165
GATEMATE operator board

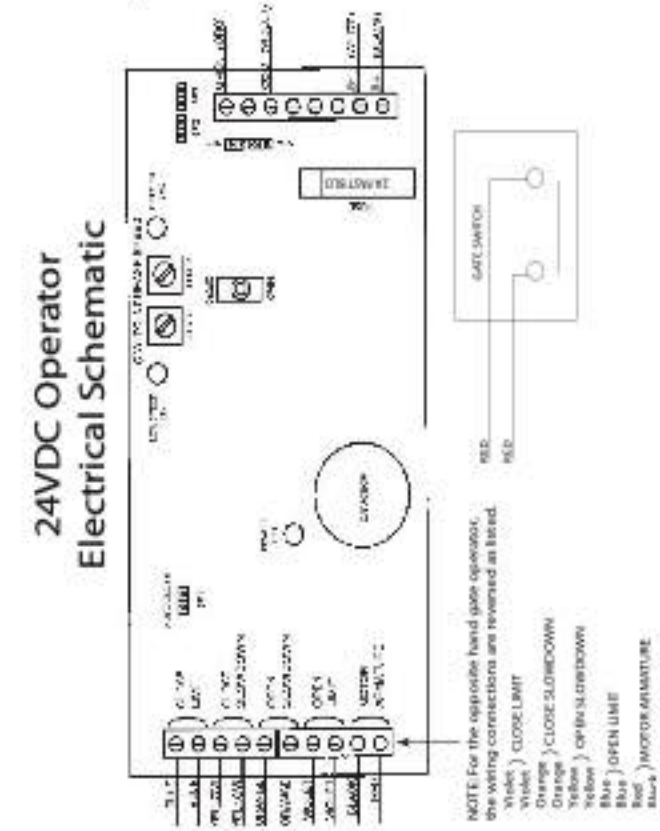

Step 38
Manual gate switch assembly and wiring

Install the gate switch, part no. 106055.

Procedure

1 Detach the nut and lock washer from the one pem stud bolt on the large track mount plate.

Figure 166
Large track mount plate pem studs

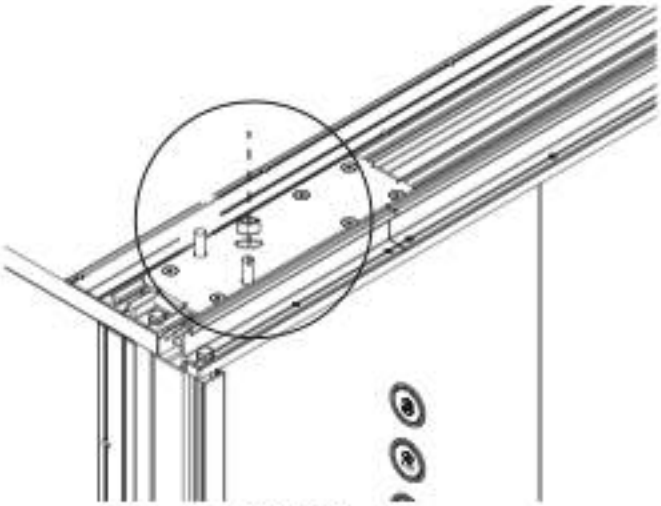

Remove ...

1 x $\frac{5}{16}$" hex nut	1 x lock washer

2 Detach the screw and lock washer from the gate switch.

Figure 167
Screw and lock washer on gate switch



3 Detach the screw from the large track plate.

Figure 168
Large track plate

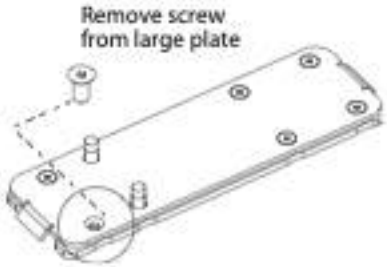

4 Assemble the gate switch to the track.

Figure 169
Gate switch attachment to track

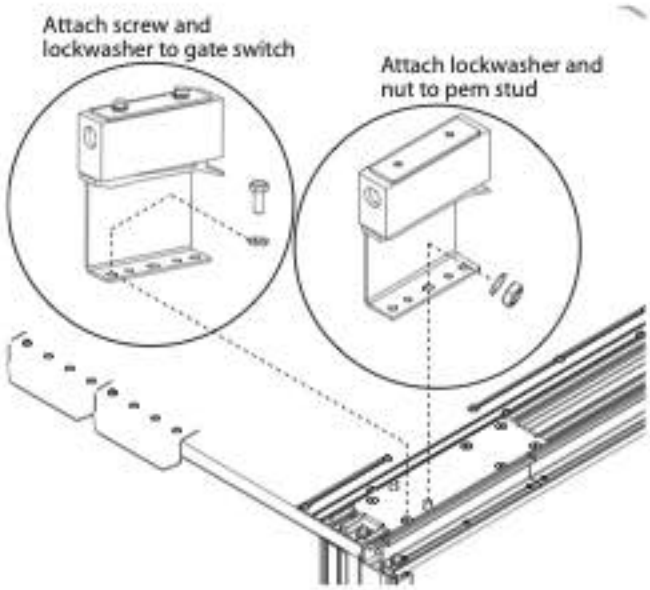

5 Adjust the stabilizer bar roller to ensure contact with the gate switch during door close.

NOTE

Be sure to set up the gate switch so contact is made within 1" of door closure.

Figure 170
Gate stabilizer at gate switch

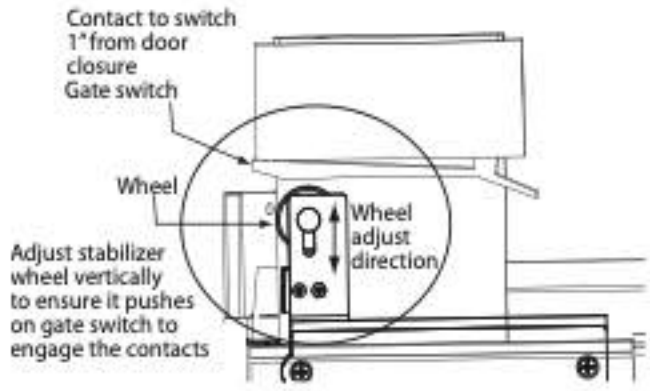

Figure 171
Stabilizer bar adjustment

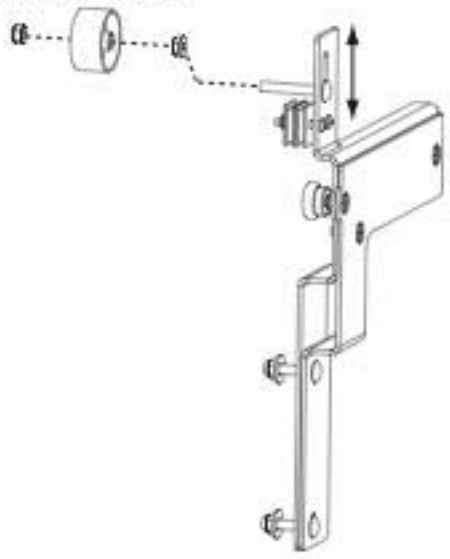

6 Connect manual gate harness part no. 772315 to car top board T18.1 (GS1A) and T18.2 (GS1B) for a front entrance, and to T19.1 (GS2A) and T19.2 (GS2B) for a rear/side entrance. NOTE: If only one manual gate is required, connect a wire jumper in the other connector.
See the Electrical Schematics for more information.

Step 39
Pit buffer shim assembly

Assemble the pit floor buffer.

Procedure

1 Attach the pit buffer shim part no. 220731 to the pit floor.
Center the shim in the pit relative to the sling arms and place the back of the buffer 2 1/8" from the front of the sling base.

Figure 172
Pit buffer shim assembly

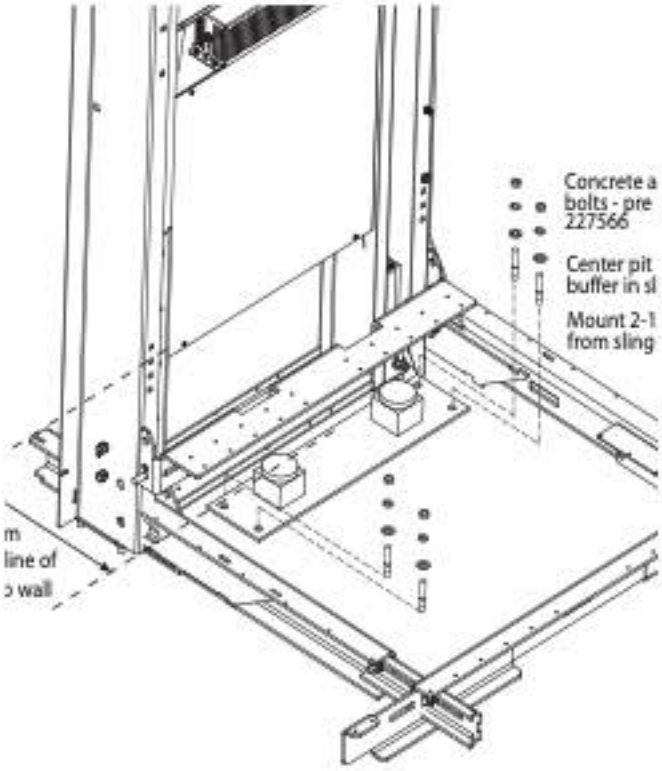

Attach with pre pack 227566

1) 4 x 1/2" x 2 1/4" concrete anchor wedge bolts 4 x 1/2" flat washers	4 x 1/2" lock washers 4 x 1/2" hex nuts

Step 40
Controller access through cab

Remove the rail side cab wall to access the main controller.

If the controller is mounted between the rails, a section of the rail side cab wall must be removable to service the controller.

A safety bit and four screws ensure that only authorized personnel can gain access to the controller.

Procedure

1 Disassemble the four screws along the cab panel hand rail.

Unscrew the safety bolts 4 x #8-32 x $\frac{1}{4}$" with a spanger safety bit.

Figure 173
Main controller access panel

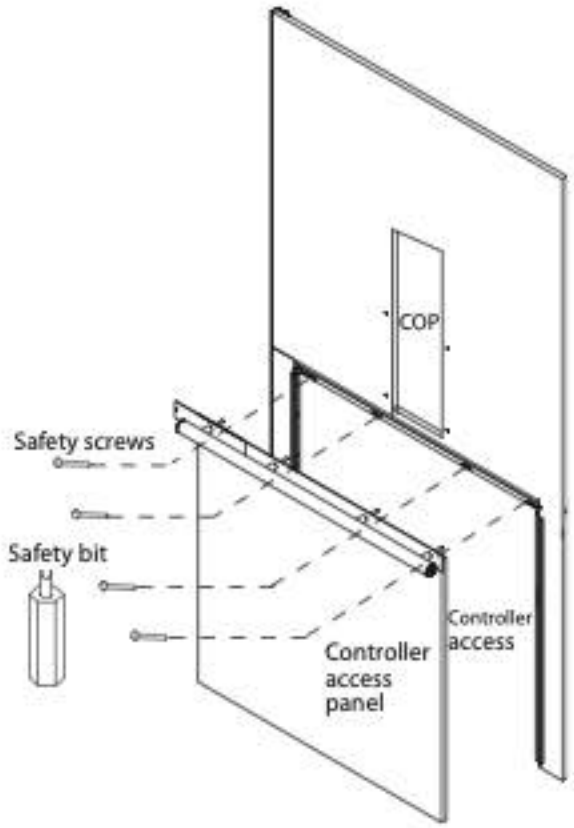

Step 41
Controller access safety switches

Install the controller access panel safety switches.

Considerations

The safety switches turn off power to the system each time you remove the cab controller access panel.

Procedure

1 Disassemble the four screws along the cab panel hand rail.

Unscrew the safety bolts 4 x #8-32 x $\frac{1}{4}$" with a spanger safety bit.

Figure 174
Main controller access panel

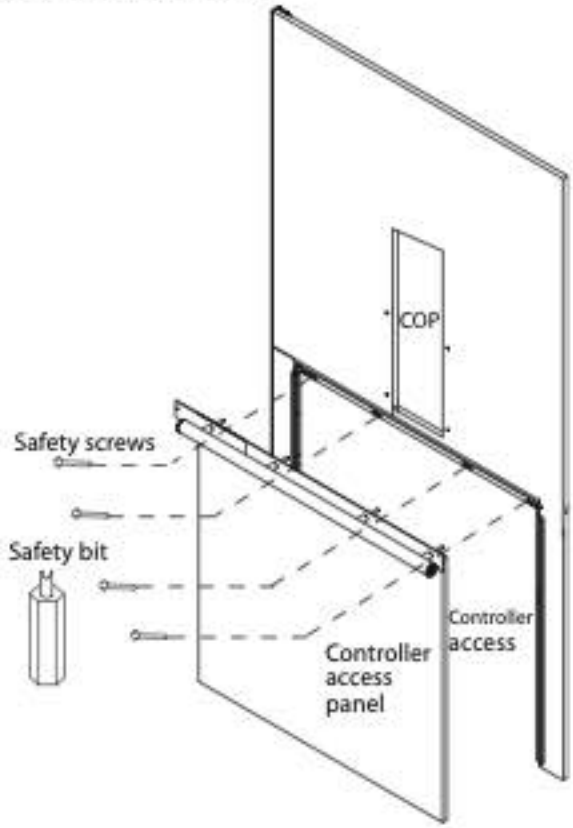

Figure 175
Safety switch insertion points



2 Assemble the left and right side safety switch with the barrel switches 100262.

Use a hex nut on the safety switch to attach.

Figure 176
Left side safety switch

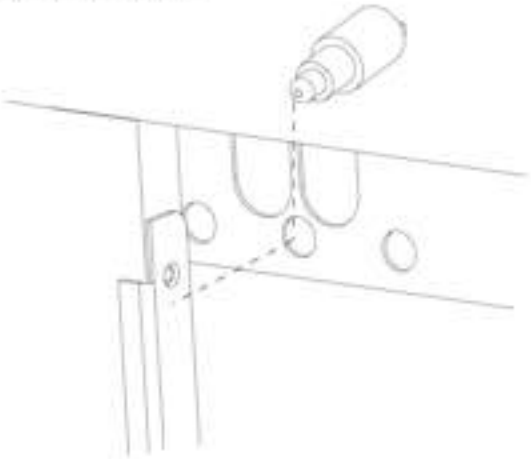

Attach with...

Wiring harness part no. 227239

3 Wire the safety switches in series to the slack chain switch and to T17 on the Car Top Junction Board with harness 227239.

Figure 177
Safety switch wiring

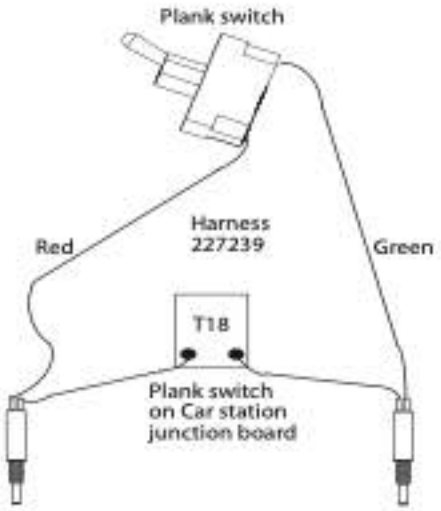

Step 42
Fully assembled test

Test automatic operation with the cab fully assembled.

Procedure

Reset procedure

1 Turn power off.
2 Remove the controller from TEMP mode if necessary and remove all temp jumpers.
3 Make sure the car gates and landing doors are closed.
4 Turn the power on.
   a. The P-Tool will read Savaria... Resetting.
   b. The elevator should run in the down direction at slow speed all the way to the first floor until the LT switch on the tape reader gets activated by the cam near the magnets.
   c. The elevator will then level back up to the first floor landing.
   d. The P-Tool will read Car position 1 Rest.
   e. The elevator is ready to take a call.
5 Run the cab to each floor stop and verify normal operation.
   a. Does the alarm sound when you push the alarm button?
   b. Does the alarm sound when you flip the run/stop switch?
   c. Does pressing the COP to go to each floor run quickly between floors and slow down when reaching each floor?
   d. Does the car stop smoothly?
   e. Does the car stop at the finished landing height?

LEDs during operation

NOTE

Refer to the controller board illustration earlier in this manual (or the Electrical Schematics) for the location of all LEDs.

While the cab is sitting at the first floor, the following controller board LEDs will be ON:
DZ - if off, check magnets and tape reader
P1 - if off, check magnets and tape reader
UT - if off, check limit switches on tape reader
LT - if off, check limit switches on tape reader
GC - if off, check car gates
MSC
EL
DE
HDC (FL6)
HDL (FL6)
DC (FL5)
DL (FL5)
DC (FL4)
DL (FL4)
DC (FL3)
DL (FL3)
DC (FL2)
DL (FL2)
DC (FL1)
DL (FL1)
DC2
DC3
DC4
OK
PT2

When you place a call to the second floor, **2C** will come ON.

The following controller board LEDs will be ON while the unit is running up to the second floor:
P2
OPF
OPR
RP
HS
UP (**DN** if running down)
CC

Step 43
Program COP position indicator (if required)

Program the car operating panel position indicator as necessary.

The LCD position indicator (PI) is programmable using the on-board DIP switches and push buttons (shown below).

Figure 178
COP position indicator



Figure 179
COP position indicator board



SW2 settings

1	2	Function
OFF	X	Operating mode or setting mode
ON	OFF	Self-testing 1
ON	ON	Self-testing 2
X	ON	Logo **Savaria** displaying in operating mode

Self-testing 1

1 Floor information, icon, arrow, and arrival gong testing
2 8 inputs and display

Input	A	B	C	D	E	F	G	H
Display	D1	D2	D3	D4	D5	D6	D7	D8

3 DIP switches SW1 and SW2, and display

Switch Position	SW1.1	SW1.2	SW1.3	SW1.4	SW1.5	SW1.6	SW1.7	SW1.8	SW2.1	SW2.2
Display	S1	S2	S3	S4	S5	S6	S7	S8	S9	SA

Self-testing 2

1 Scan each segment and icon of LCD
2 Scan floor information and character

NOTE: Settings will be effective after restarting power-on.

SW1: 8-position DIP switch settings

Use DIP switch SW1.1 through SW1.4 to program the floor (see table on next page)

Push-button switches for setting up and saving display information

1 **UP**: Press to scroll upwards through the characters
2 **DN**: Press to scroll downwards through the characters
3 **SAV**: Press to step from 10's, to 1's, to timing during floor programming procedure

Volume adjustment of arrival gong via VR1

- Increase volume by turning VR1 clockwise; decrease volume by turning VR1 counter-clockwise
- Single gong for UP direction; double gong for DOWN direction
- The default volume of arrival gong is set to 60 dB

Figure 180:LCD icons

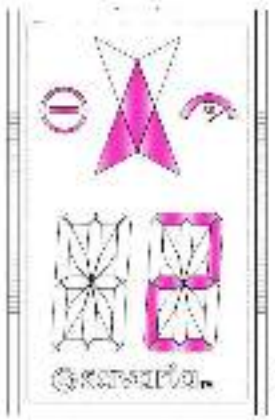

- **Call for service**: Symbol is displayed when elevator requires maintenance. Normally, symbol is not displayed.
- **Full on/Full off**: Symbol is displayed when elevator overloads. Normally, symbol is not displayed.
- **Savaria logo**: Normally, the logo is displayed.

Floor programming procedure

1 Set DIP switch SW1, positions 1 through 4 to select the floor to program (see the table below).

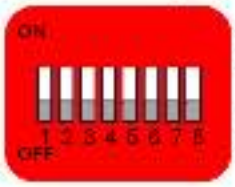

Note:
DIP Switch 5 to 8 not used

All switches are normally in OFF position

Floor being programmed	DIP Switches (1, 2, 3...)	Selector Signals
1	1	P1
2	2	P2
3	1, 2	P1, P2
4	3	P3
5	1, 3	P1, P3
6	2, 3	P2, P3

Note:
The DIP Switches that are turned on mimic the selector lights that are on for that given floor.

Please ensure you are getting the correct selector lights for each floor or else your COP will not program correctly and will show the wrong letter/number.

Check both controller and Car Top Board (if applicable).

2 Press and hold SAV for 3 seconds until the character in the LCD display is blinking. The 1's digit should be blinking. NOTE: The 10's digit display should be set to "Blank" for single digit use.
3 Press UP or DN to scroll upwards or downwards through the numbers/letters.
4 When the desired number or letter is selected, press SAV once. The 10's digit should now be blinking.
5 Press UP or DN to scroll upwards or downwards through the letters/numbers. When the desired number or letter is selected, press SAV once. You will now see T2 or T#.
6 Press SAV once again, your floor display that you programmed will now be blinking. Press and hold SAV button for 5 – 10 seconds. Your display should stop blinking.
7 The floor setting is programmed.
8 Turn off the DIP switches SW1 turned on in step 1.
9 Repeat the above steps 1 through 7 for each floor to be modified.

NOTE

Programming has a timer lockout. If timer expires mid-programming, user will be booted back to the start. It is advised to program each floor one at a time, and ensuring it is saved before programming the next floor.

To set Time Delay:

1 Set the time delay (default is T2: 100ms):

a. Press and hold SAV for 3 seconds until the character in the LCD display is blinking.

b. Press SAV until 'T' is displayed in the 10's digit display.

c. Use the UP/DN buttons to set the time delay value in the 1's digit display, T0 through TF per the table below

Setting	Time Delay (ms)
T0	0
T1	50
T2	100
T3	150
T4	175
T5	200
T6	225
T7	250
T8	275
T9	300
TA	325
TB	350
TC	500
TD	600
TE	800
TF	1000

Step 44

Program hall call position indicator (if required)

Program the hall call position indicator as necessary.

The position indicator (PI) display for the landing station (hall call) is an optional feature.

Figure 181:



PI wiring

For a landing station with PI indicator display, there is a 5 conductor wire (in addition to the 12 conductor wire) to run from the machine room to each landing station.

To save wire, run the wire from the machine room to floor 1, and then extend the wires from floor 1 to 2, then 2 to 3, and so on.

Wiring for the landing station with PI indicator is shown below.

Figure 182

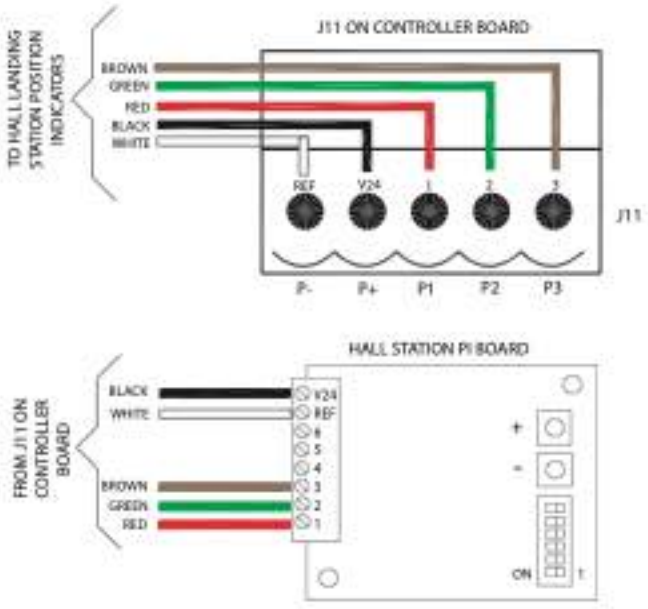

PI programming

You can program the hall position indicator (PI) to change the display output using the on-board DIP switch and +/- pushbuttons (shown below).

Figure 183

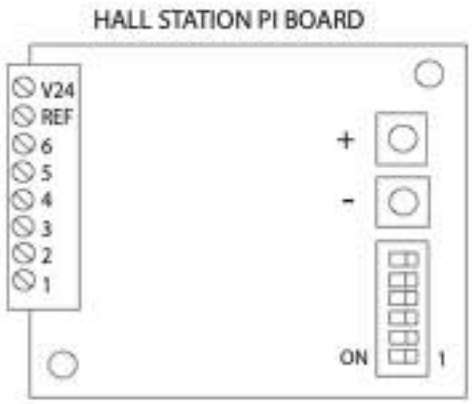

To program the hall position indicator, follow these steps.

1 With power applied, the dot-matrix LED display on the hall position indicator will light up.
2 Turn DIP switches 5 and 6 ON, and then press the (+) or (-) pushbutton until **b** is displayed.
3 Turn DIP switch 5 OFF and leave 6 ON on until all floors have been programmed.
4 Choose the floor to be programmed by setting the DIP switch to the binary code of the floor number. Refer to the table below.

Position Indicator DIP Switch Settings

Floor	DIP Switch			
	4	3	2	1
1	OFF	OFF	OFF	ON
2	OFF	OFF	ON	OFF
3	OFF	OFF	ON	ON
4	OFF	ON	OFF	OFF
5	OFF	ON	OFF	ON
6	OFF	ON	ON	OFF

5 Press the (+) or (-) pushbutton until the desired number or character (0 to 9, A to Z) is displayed.
6 When you get the desired display, turn the DIP switch OFF to save the display to memory.
7 Repeat steps 4 to 6 until all floors are programmed.
8 Turn DIP switch 6 OFF.
9 When the PI display stops flashing, the unit is ready to run.

PI programming

INSPECTION NOTE

Savaria Speed Arrestor are set and sealed at the factory per 2.18.3
If the local Authority Having Jurisdiction requires site verification during initial or periodic inspection it shall be done with a spin test based on requirements of A17.2 part 2.13.2 as modified for Private Residence Elevator application permitted by ASME A17.1 interpretation 19-2665 (see spin test guide in Appendix G)
Testing of governor application shall be done as specified in ASME A17.1 part *8.10.2.2.2(ii)(2)(-a)* by manually tripping the system at the rated speed and no load in the car.

Step 45
Test emergency battery lowering function

Test the emergency battery lowering function (for use during a power failure).

Procedure

To test the emergency battery lowering function, you need to simulate a power failure.

NOTE

During a power failure, the elevator will not respond to an UP call nor will it travel upwards.

1 Simulate a power failure by turning the elevator power off via the breaker on the main distribution panel (not the elevator main disconnect). The elevator should respond as described below.
2 If the power failure occurs while the elevator is resting at the upper landing:
   a. The elevator remains at that landing and the UPS beeps to indicate that power has been lost.
   b. Place a DOWN call from the car (or push the hall call button) to run the elevator down.
   c. Once the elevator has been called, it runs down to any floor below the upper landing.
   d. When the elevator arrives at the floor, the door unlocks, and the door and gate open (if equipped with auto gates/doors).
3 If the power failure occurs while the elevator is traveling down:
   a. The elevator stops momentarily and then continues traveling down to the called landing.
   b. When the elevator arrives at the floor, the door unlocks, and the door and gate open (if equipped with auto gates/doors).
4 If the power failure occurs while the elevator is traveling up:
   a. The elevator stops, cancels the up call and travels down to the next floor below.
   b. When the elevator arrives at the floor, the door unlocks and the door and gate open (if equipped with auto gates/doors).

Step 46
Before leaving job site

Before leaving the job site, make sure the work area is clean and the elevator is safe and operational.

Procedure

1 Complete the Installation Checklist on page 110.
2 Clean up the work area.
3 Explain the operation of the elevator to the customer.
4 Assist the customer on an orientation ride. During this orientation, stress the importance of proper operation and regular maintenance.
5 Provide a copy of the Owner's Manual and Warranty to the customer. Be sure to record all required details per the Owner's Manual.

IMPORTANT

Do NOT turn over the elevator prior to having an active phone line and having properly tested the phone or automatic dialer phone (as applicable).

Eclipse Safety Testing

The safeties provided on our 1:1 chained geared units are designed in accordance with CSA Standards. The safeties are operated by the overspeed governor (if equipped) and/or the action of a slack suspension chain device.

These safety provisions are sufficient to insure a safe installation.

Safety Test Procedure

Perform the safety test BEFORE building the cab so you can see/access safeties if adjustment is needed.

1 Place the rated load on the platform.
2 Run the lift up at least 2 feet higher than the shoring blocks or pit prop location.
3 Remove power from the unit.
4 Press the pit stop button, and then enter the pit and install the shoring blocks or pit prop.
5 Using the manual hand crank, slowly lower the unit down onto a bottle jack and support post that is positioned approximately 6 to 8" higher than the shoring blocks or pit prop height.
6 With the lift on the bottle jack, turn the hand crank down to gain about 6" of slack chain.
7 Carefully check that the safeties have engaged the rails properly and evenly.
8 Step clear of the pit!
9 Mark the level of the cab on the door frame/tower.
10 Use a long extension to release the bottle jack from outside the hoistway.
11 The lift will remain on the safeties, and the chain will be slack proving that the safeties are supporting the gross load.
12 Mark the location of the lift on the door frame/tower and record the distance from the original mark.
13 Restore power to the unit.
14 Use the manual hand crank to run the lift up at least 3 feet to reset the safeties, as well as to allow access to the safety marks on the rails.
15 Ensure that the marks are fairly even in height and application.
16 File the marks on the rails and reset the slack chain switch.
17 Verify that the chain and chain fastening have returned to their proper location.
18 Remove the pit prop or shoring blocks and exit the pit.
19 Reset the pit stop switch.

NOTE: The purpose of the illustration below is to show the safety testing method. This does not represent any specific product and does not illustrate the actual rated load for the Eclipse.

Figure 184:

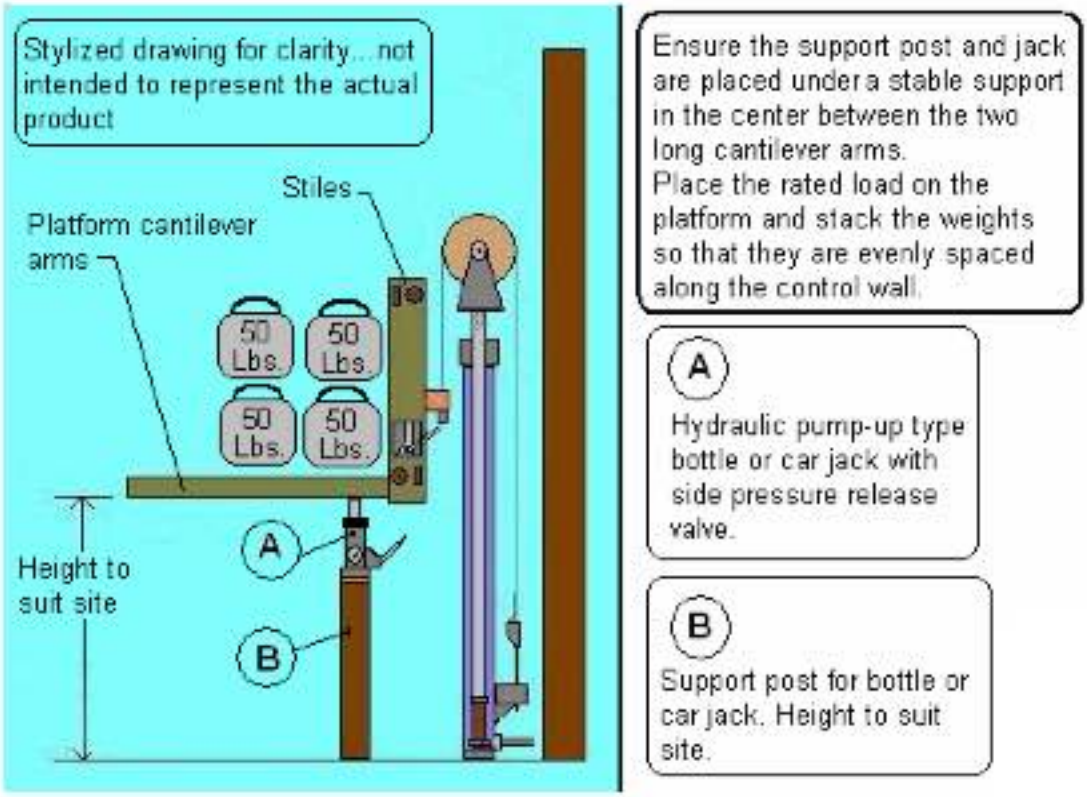

Appendix A
Electrical Schematics

The Micro-6 Electrical Schematics are provided in a separate 11" x 17" package.

Appendix B
P-Tool Information

This appendix contains information about the Programming Tool (P-Tool) shown at the right.



To use the P-Tool (P/N 326049), connect it to the J1 connector in the bottom right-hand corner of the controller board.

Press the **[1]** key and the display will show the current status of the elevator.

You can use the P-Tool to perform the following:

- View the status of the elevator
- Change parameter settings
- View and clear the fault log
- View and clear the counters
- Put the system into temporary run mode
- Run the elevator while in temporary run mode

NOTE

For a detailed description of the controller and the programming tool, refer to the *6M2 Series Controller Operations Manual (000798)*.

NOTE

There is no need to power down the controller to plug in the P-Tool. When you plug the P-Tool into a controller that is powered on, the P-Tool displays gibberish. To clear this and read faults, press and hold the 'D' key for 3 seconds.

TEMPORARY RUN MODE

Follow these steps to use temporary run mode:

1. Connect the following temporary jumpers on the Micro-6 controller board:
   - TC4 and TC5
   - TC4 and TC6
   - TC11 and FL6-4
2. Cycle power via the UPS while holding P-Tool **1, 5, 0** to enter temporary mode.
3. Press P-Tool **A** to move up. For high speed, press P-Tool **B** also.
4. Press P-Tool **D** to move down. For high speed, press P-Tool **B** also.
5. Use the Savaria temporary run buttons (P/N 200438) as normal when in temporary mode.

NOTE

Be sure to remove the jumpers from the controller board when no longer running in temporary mode.

PROGRAMMING TOOL
SAVARIA LOGIC BOARD
Software v1.0

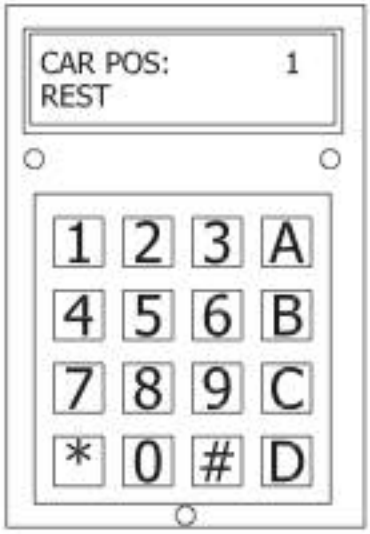

NORMAL DISPLAY:
TOP LINE = CAR POSITION
BOTTOM LINE = CAR STATUS

HOT KEY FUNCTIONS:
(*) - RESET
(A) - VIEW MENU

MENU OPTIONS:
1-NORMAL: DISPLAYS THE CAR'S POSITION AND STATUS
2-PROGRAM: ALLOWS YOU TO EDIT SYSTEM PARAMETERS
3-LOG: VIEW THE LAST 20 EVENTS
4-COUNT: THREE COUNTERS ARE PROVIDED: TOTAL, TRIP AND RE-LEVEL

A DETAILED DESCRIPTION OF EACH MENU OPTION IS PROVIDED

PROGRAMMING v1.0 (1 of 3)

CAR POS: 1 REST	PRESS (A) TO VIEW THE MENU
NORM (1) PROG (2) LOG (3) COUNTER (4)	PRESS (2) TO VIEW OR CHANGE PROGRAMMING
Password Then # Prog:	TYPE IN THE PASSWORD THEN PRESS THE (#) KEY FACTORY DEFAULT: 2,4,8,6,5
Number of Floors (2)	TYPE IN THE DESIRED NUMBER OF FLOORS AND PRESS # (ADJUSTABLE FROM 2 - 6)
Automatic PB (0)No (1)Yes (1)	SELECT (0) NO IF CONSTANT PRESSURE OPERATION IS DESIRED
Hydraulic App (0) (0)No (1)Yes	IF DRIVE SYSTEM IS HYDRAULIC SELECT (1)YES OTHERWISE SELECT (0) NO IF (0) NO IS SELECTED, RE-LEVELING IS DISABLED
Delay Up Stop X 0.01sec (000)	TYPE IN THE TIME AND PRESS # TO SET THE TIME THAT THE MOTOR WILL CONTINUE TO RUN AFTER "UL" DROPS OUT. ALLOWS CAR TO STOP HIGHER IN THE DEAD ZONE. (ADJUSTABLE 0-200 X10ms | 000 = DISABLED)
Run Timer (090) SEC	TYPE IN TIME AND PRESS # TO SET THE MAXIMUM RUN TIME (ADJUSTABLE FROM 30 - 180 SECONDS) See NOTE below.
Car Light Timer (05)Minute	TYPE IN THE TIME AND PRESS # TO SET THE TIME THE CAR LIGHT SHALL REMAIN ON AFTER THE COMPLETION OF A CALL (1-10 MINUTES)
Non-interference Timer (2) Sec	TYPE IN THE TIME AND PRESS # TO SET THE TIME BEFORE A NEW CALL CAN BE ACCEPTED (2-60 SEC)
Car Call Cancel Timer (10) Sec	TYPE IN THE TIME AND PRESS # TO SET THE TIME AFTER WHICH THE CALL WILL BE DROPPED IF THE CAR IS UNABLE TO RESPOND (ADJUSTABLE 0 - 60 SECONDS)

ONCE IN PRORAMMING MODE:

TO MAKE A CHANGE PRESS THE KEY FOR THE DESIRED NUMBER AND PRESS THE (#) KEY TO ACCEPT THE CHANGE.

(A) TO RETUN TO THE MAIN MENU
(B) TO SCROLL UP
(C) TO SCROLL DOWN
(D) TO CLEAR THE CURRENT VALUE.
(#) TO ACCEPT THE CHANGE
(*) TO PERFORM A RESET

NOTE: If the RUN TIMER trips on a geared unit and the lift is not at floor level, it will have to be moved to a landing before the reset can be performed.

PROGRAMMING v1.0 (2 of 3)

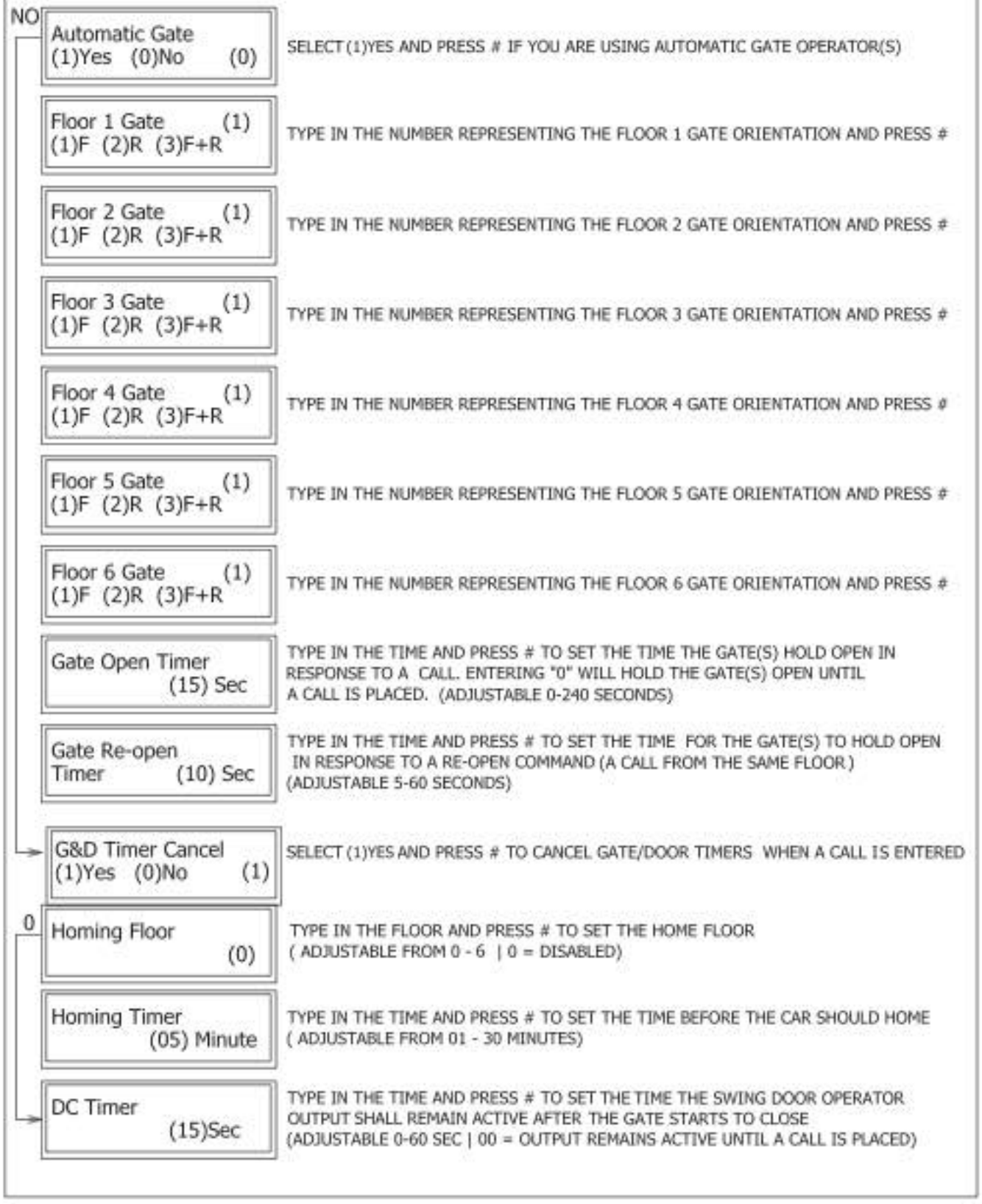

PROGRAMMING v1.0 (3 of 3)

Short Floors 1/2 (0)No (1)Yes (0)	SELECT (1)YES AND PRESS # TO INHIBIT HIGH SPEED IN BOTH DIRECTIONS WHEN RUNNING BETWEEN FLOORS 1 AND 2 MIN FLOOR DISTANCE IS 7" FOR APB AND 14" FOR CP
Short Floors 2/3 (0)No (1)Yes (0)	SELECT (1)YES AND PRESS # TO INHIBIT HIGH SPEED IN BOTH DIRECTIONS WHEN RUNNING BETWEEN FLOORS 2 AND 3 MIN FLOOR DISTANCE IS 7" FOR APB AND 14" FOR CP
Short Floors 3/4 (0)No (1)Yes (0)	SELECT (1)YES AND PRESS # TO INHIBIT HIGH SPEED IN BOTH DIRECTIONS WHEN RUNNING BETWEEN FLOORS 3 AND 4 MIN FLOOR DISTANCE IS 7" FOR APB AND 14" FOR CP
Short Floors 4/5 (0)No (1)Yes (0)	SELECT (1)YES AND PRESS # TO INHIBIT HIGH SPEED IN BOTH DIRECTIONS WHEN RUNNING BETWEEN FLOORS 4 AND 5 MIN FLOOR DISTANCE IS 7" FOR APB AND 14" FOR CP
Short Floors 5/6 (0)No (1)Yes (0)	SELECT (1)YES AND PRESS # TO INHIBIT HIGH SPEED IN BOTH DIRECTIONS WHEN RUNNING BETWEEN FLOORS 5 AND 6 MIN FLOOR DISTANCE IS 7" FOR APB AND 14" FOR CP
Call But. Fault 0-No 1-A 2-U (2)	No: WILL DISABLE THIS FEATURE A: WILL FLASH ALL CODES TO THE CALL BUTTON LIGHTS U: WILL FLASH ONLY THOSE CODES WHICH ARE USER CORRECTABLE
Auto Shutdown Counter X10(000)	TYPE IN THE NUMBER AND PRESS # TO SET THE NUMBER OF TRIPS BEFORE THE ELEVATOR IS DISABLED (ADJUSTABLE 0 - 999 | 0 = DISABLED) THIS FEATURE WILL BE DISABLED AFTER FOUR ACTIVATIONS
CALL 3 ASSIGNMENT (3)	TYPE IN THE FLOOR NUMBER WHICH THE CAR WILL RUN TO WHEN THIS CALL IS PLACED. THE FLOOR 3 DOOR SETTINGS WILL APPLY WHEN THIS IS USED. (THIS PARAMETER DOES NOT SHOW UP WHEN THE NUMBER OF FLOORS >= 3)
CALL 4 ASSIGNMENT (4)	TYPE IN THE FLOOR NUMBER WHICH THE CAR WILL RUN TO WHEN THIS CALL IS PLACED. THE FLOOR 4 DOOR SETTINGS WILL APPLY WHEN THIS IS USED. (THIS PARAMETER DOES NOT SHOW UP WHEN THE NUMBER OF FLOORS >= 4)
CALL 5 ASSIGNMENT (5)	TYPE IN THE FLOOR NUMBER WHICH THE CAR WILL RUN TO WHEN THIS CALL IS PLACED. THE FLOOR 5 DOOR SETTINGS WILL APPLY WHEN THIS IS USED. (THIS PARAMETER DOES NOT SHOW UP WHEN THE NUMBER OF FLOORS >= 5)
CALL 6 ASSIGNMENT (6)	TYPE IN THE FLOOR NUMBER WHICH THE CAR WILL RUN TO WHEN THIS CALL IS PLACED. THE FLOOR 6 DOOR SETTINGS WILL APPLY WHEN THIS IS USED. (THIS PARAMETER DOES NOT SHOW UP WHEN THE NUMBER OF FLOORS = 6)
Modify Password (1)Yes (0)No (0)	TYPE IN C TO KEEP THE PASSWORD AND VIEW NEXT PARAMETER TYPE IN 1 AND PRESS # TO CHANGE THE PASSWORD NOTE: PASSWORD MUST BE 5 DIGITS (NUMERICAL ONLY)

LOG



PRESS (A) TO VIEW THE MENU

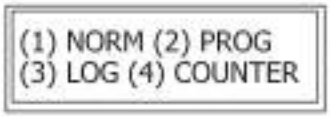

PRESS (3) TO VIEW THE LOG



THE FIRST LINE IS A DESCRIPTION OF THE EVENT
2U=EVENT OCCURED AT 2ND FL WHILE TRAVELING UP
L= LAST EVENT



(C) VIEWS PREVIOUS EVENT UNTIL "NO EVENTS" IS SEEN

ONCE IN LOG MODE:

THE LOG STORES 20 ERRORS IN A LAST IN FIRST OUT FORMAT.

(A) TO RETUN TO THE MAIN MENU
(B) TO VIEW LATER EVENT
(C) TO VIEW EARLIER EVENT
(D) TO CLEAR THE LOG
Note: PASSWORD IS REQUIRED TO CLEAR LOG
(*) TO PERFORM A RESET

COUNTERS

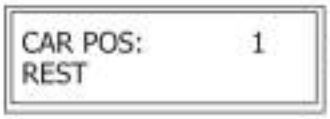

PRESS (A) TO VIEW THE MENU

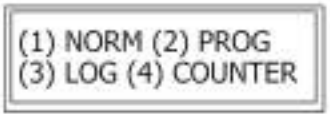

PRESS (4) TO VIEW COUNTERS

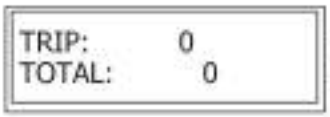

THE "TRIP" AND "TOTAL" RUN COUNTERS ARE DISPLAYED



(C) TO VIEW UP LEVELING COUNTER

ONCE IN COUNTER MODE:

THE SYSTEM HAS THREE COUNTERS.

TRIP: INCREMENTS EACH TIME THE CAR MOVES IN RESPONSE TO A CALL. RESETTABLE

TOTAL: SAME AS TRIP BUT NOT RESETTABLE

UP LEVELING: INCREMENTS EACH TIME THE CAR MOVES UP WITHOUT A CALL. RESETTABLE

(A) TO RETUN TO THE MAIN MENU
(B) TO VIEW PREVIOUS COUNTERS
(C) TO VIEW NEXT COUNTER
(D) TO CLEAR THE COUNTERS
Note: PASSWORD IS REQUIRED TO CLEAR COUNTERS
(*) TO PERFORM A RESET

Appendix C
Diagnostic Beep Codes

The Micro-6 controller can be set up to provide audible fault codes (diagnostic beep codes). These codes can help the user diagnose certain problems themselves and also provide information to the dealer as to why a lift isn't functioning properly.

To enable the codes, use the P-Tool and set the parameter "call but.fault" to:

- 0 for no audible codes
- 1 for User codes only
- 2 for User and Service codes

User codes provide feedback to the user and do not require a service visit.

- 1 short beep - a gate is open or the in-car Stop switch is activated. Make sure the in-car Stop switch is in the Run position. Check that the car gate is closed.
- 2 short beeps - a door is open. Check that the landing door is closed.
- 3 short beeps - gate needs to be cycled. Manually open the gate.
- Single beep every 30 seconds - power failure, unit will only respond to calls/commands to go in the down direction.

Service codes are those that require a site visit. All Service codes begin with one long 2-second beep.

- 1 long and 1 short beep - possible problems are overload trip, run timer fault, safety circuit open, door lock fault or auto shutdown counter.
- 1 long and 2 short beeps - possible problems are re-level shutdown or low pressure switch activated.
- 1 long and 3 short beeps - possible problems are selector fault, selector encoding or position error.

Appendix D
Maintenance

NOTE

For Maintenance Procedures that are code-compliant, please refer to ASME A17.1-2010/CSA B44-10, Section 8.6 (Maintenance, Repair, Replacement, and Testing).

NOTE

If the unit has been shut down for an extended period of time, be sure to perform maintenance before startup. It is very important to ensure the motor brake is working freely and engaging properly.

Regular maintenance will keep the elevator in proper operating condition. To ensure proper operating condition of the unit, the items listed below must be inspected and, if necessary, serviced a minimum of **twice per year**.

Additional inspections may be required depending on usage.

1. Tighten all rail and cab fastening bolts.
2. Lubricate the door hinges and adjust the door closure if required.
3. Lubricate the rails with light grease, such as white lithium.
4. Lubricate the sheet metal track for the counterweight assembly.
5. For a Gatemate operator, lubricate the shaft and bushing using a general silicone lubrication spray (lubricate on installation as well).
6. Inspect the traveling cable for wear. Replace the cable if any cuts or damage to the jacket are evident.
7. Replace the batteries inside the control panel as indicated on the battery label.
8. Perform the required maintenance to the door locks.
9. Activate and test the safety mechanism.

Appendix E
110V Gate Operator

This appendix provides documentation for the 110V gate operator.

KIS100
Power Gate Operator
Installation Manual - Savaria

Table of Contents

Introduction	Page 1
Technical Specifications	Page 2
Installation Mechanical	Page 3
Installation Electrical	Page 5
Electrical Schematic	Page 6
Troubleshooting	Page 7

PATENT PENDING

Porta Inc.
250 Hamilton Rd.
Arlington Heights,IL 60005

Phone: (847) 593-4900
Fax: (847) 593-1394
website: emiporta.com

Page 1

KIS100 Power Gate Operator

Introduction

The KIS100 gate operator is a proven product that provides a user friendly, dependable and cost effective means of automating accordion gates used in residential and LULA elevators. It has passed an accelerated life test of 25 years of normal residential use (100,000 cycles).

This product conforms to UL508A, ASME A17.1A, ASME A17.5, CSA-B44-944, and CSA-C22.22, No. 14-M91.

Features & Benefits

- Two Speed bi-directional gate operation
- Selectable Auto-Close feature
  Will automatically close the gate when the open signal is removed
- GAL type G gate switch mounts within the KIS100 chassis
- Micro-switch slow downs and limits
  Provide a simple and accurate means of decelerating and stopping the gate
- Magnetic coupling of gate to operator
  Provides a simple and positive means of preventing damage or injury in the case of an obstruction. If the resistance to gate closure exceeds the magnetic coupler, the gate disengages and becomes a manual gate. There is nothing to get out of adjustment or reset. This coupling system also allows for moderate mis-alignment of operator and gate.
- 14" gate arm
  Reduces bottom hinge lag
- Quiet Operation
  A precision ground lead screw drive system provides virtually silent operation.
- Retrofit existing installations
  The footprint of the KIS100 is the same as the standard Accordion gate
- PWM motor drive
  Provides quiet operation, longer motor life and reduced power consumption.

ATTENTION!

WARNING: The installation of this device should only be performed by a professional elevator technician that has a full understanding of this device's operation and function.

Note: If there is any doubt regarding the installation procedures, please call the factory for assistance. We are available M-F 8:00 am to 5:00 pm Central Time.

WARNING: Failure to comply with all instructions and "WARNING"(s) can result in a safety system compromise. This, in turn, can result in serious injury or death.

PATENT PENDING

PORTA Inc.
Porta Inc.
250 Hamilton Rd.
Arlington Heights,IL 60005
Phone: (847) 593-4900
Fax: (847) 593-1394
website: emiporta.com

KIS1OO-Accordion Gate Operator

Technical Specifications

Input Power	120VAC
Motor	90VDC
Motor Drive	1A(P.W.M.)
High Speed (nom.)	107sec.
High Speed Adj.	0-100%
Low Speed Adj.	0-80%
Drive Belt	0-Ring (343)
Control Interface	12/24 VDC
Gate Switch	GTS100

Dimensional Data

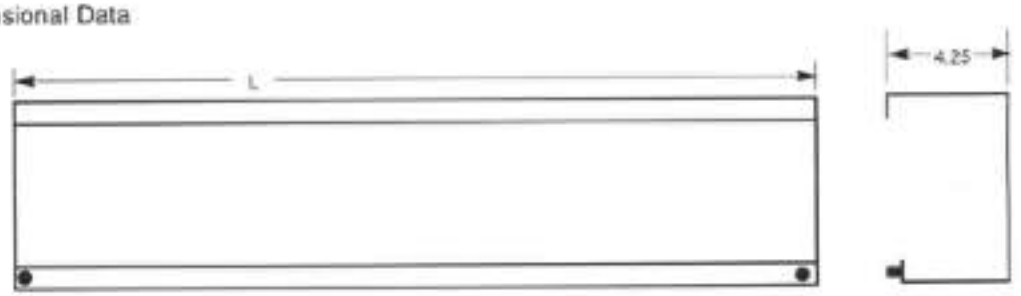

Front View

Side View

Gate Travel	
29 Inches	36 1/2"
32 Inches	39 1/2"
36 Inches	43 1/2"
42 Inches	49 1/2"

PATENT PENDING

PORTA Inc.

Porta Inc.
250 Hamilton Rd.
Arlington Heights,IL 60005

Phone: (847) 593-4900
Fax: (847) 593-1394
website: emiporta.com

Page 3

KIS1OO-Accordion Gate Operator

INSTALLATION - MECHANICAL

1. Unpack the unit, remove the cover, and check for any physical damage before proceeding.

2. Check to see that you have the correct hand unit. The operator is designed so the motor is on the stack side of the gate. The operator can be made to work on the opposite hand, but on most jobs it will require a large amount of overhang. The chassis is symmetrical; if necessary you can covert hand in the field, however this will VOID THE WARRANTY.

3. Operate the gate manually. The door must operate smoothly without any binding. Correct any problems with the gate before proceeding.

4. Mark a line on the car top corresponding to the centerline or the front edge of the gate track.

5. If the distance from the gate track centerline to the edge of the car top is more than 1 -1/8", there are two options: Shim out connecting arm (maximum recommended distance is 1/2"), or cut back the edge of the car top. If you need to cut back the car top, do so now - cut so there is 1-1/8" from the gate track centerline to the edge.

6. Place the operator on the cartop. Set the operator so the front edge is 1-1/8" (max) from the centerline or 9/16" (max) from the front edge of the gate track toward the inside of the car, and so the lead end is 3/4" past the gate strike . See Fig 1.

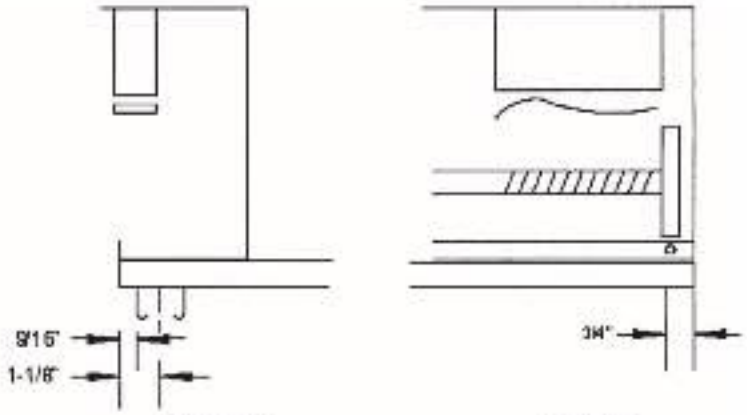

Fig. 1 Side View Front View

PATENT PENDING

PORTA Inc.
Porta Inc.
250 Hamilton Rd.
Arlington Heights,IL 60005
Phone: (847) 593-4900
Fax: (847) 593-1394
website: emiporta.com

KIS1OO-Accordion Gate Operator

INSTALLATION - MECHANICAL (CON'T)

7. Pull the gate to its fully closed position. Check that the drive nut is about 1/2" away from the closed side pillow block; manually rotate the lead screw if necessary (it will be easier to rotate with the drive o-ring removed). Place the gate arm magnet on the magnet flag; the middle of the magnet should be in the middle of the flag. Check that the gate switch is closed, but still has about 1/4" of follow-up. See Fig 2.

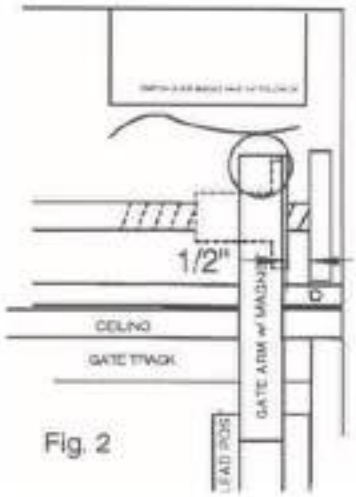

Fig. 2

8. The gate arm should line up with the gate lead post. If not, minor adjustments can be made by simply moving the gate arm magnet around on the flag. Large adjustments will require repositioning of the operator.

9. With the operator and gate arm in position, mark through the mounting holes for drilling the car top and the gate lead post.

10. Move the operator so you can drill 1/8" pilot holes in the cartop and 1/4" through holes in the gate lead post. BE CAREFUL NOT TO DRILL THROUGH THE CAR TOP IF THE HOLES WOULD BE VISIBLE.

11. Attach the operator to cartop. #12 x 3/4 screws are provided for wood cartops. Attach the gate arm with 1/4" -20 x 1 1/4" carriage bolts and acorn nuts. See Fig. 3

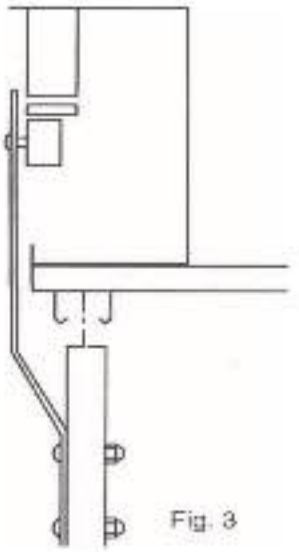
Fig. 3

12. Manually rotate the lead screw to open the gate about 1/2" from its fully closed position. Adjust the closed limit so that it "clicks" when the gate is about 1/4" from being fully closed; check by manually rotating lead screw.

13. Adjust the close slow down limit so that it is about 2" center-to-center from the closed limit.

14. Manually rotate the lead screw to about 1/2" from its fully open position. Adjust the open limit so that it "clicks" when the gate is about 1/4" from being fully open; check by manually rotating lead screw.

NOTE: LEAD SCREW ASSEMBLY IS SELF-LUBRICATING. LUBRICATION IS NOT RECOMMENDED.
NOTE: IF NEEDED, PETROLEUM JELLY CAN BE USED TO LUBRICATE THE GUIDE RAIL.

PATENT PENDING

PORTA Inc.
Porta Inc.
250 Hamilton Rd.
Arlington Heights,IL 60005
Phone: (847) 593-4900
Fax: (847) 593-1394
website: emiporta.com

Page 5

KIS1OO-Accordion Gate Operator

INSTALLATION - ELECTRICAL

1.The KIS100 is field wired including the gate switch if so equipped. Run field wires from operator through conduit or greenfield. 2-1/2" knockouts are provided in the chassis for an appropriate fitting.

2. Ground the chassis per code.

3. Verify power before connecting the operator.

4. Verify the type and voltage of control signal being used, refer to the Field Connection Diagrams.

5. There are 5 jumpers on the board:

SP1: Auto close; with this jumper installed the operator will automatically close when there is no signal to open. Remove if controller provides an independent close signal, or for testing and adjusting.

SP2-SP5: Are used to select the control signalization. Refer to the Field Connections

6. To test unit, set speed pots in the middle of their range. Then use on board toggle switch to open and close the operator. Adjust the speed control and limit switches as necessary.

7. Connect wiring from elevator controller to interface board. Reinstall SP1 if using only an open signal from the controller.

8. Test the unit for automatic operation and replace cover.

Field Connection Diagram

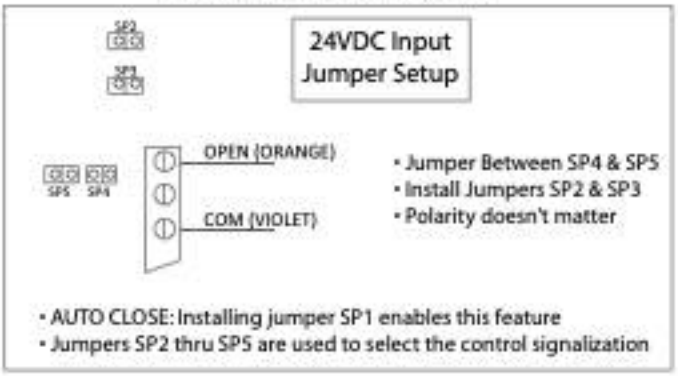

PATENT PENDING

PORTA Inc.
Porta Inc.
250 Hamilton Rd.
Arlington Heights,IL 60005
Phone: (847) 593-4900
Fax: (847) 593-1394
website: emiporta.com

KIS1OO-Accordion Gate Operator

Page 6

Electrical Schematic

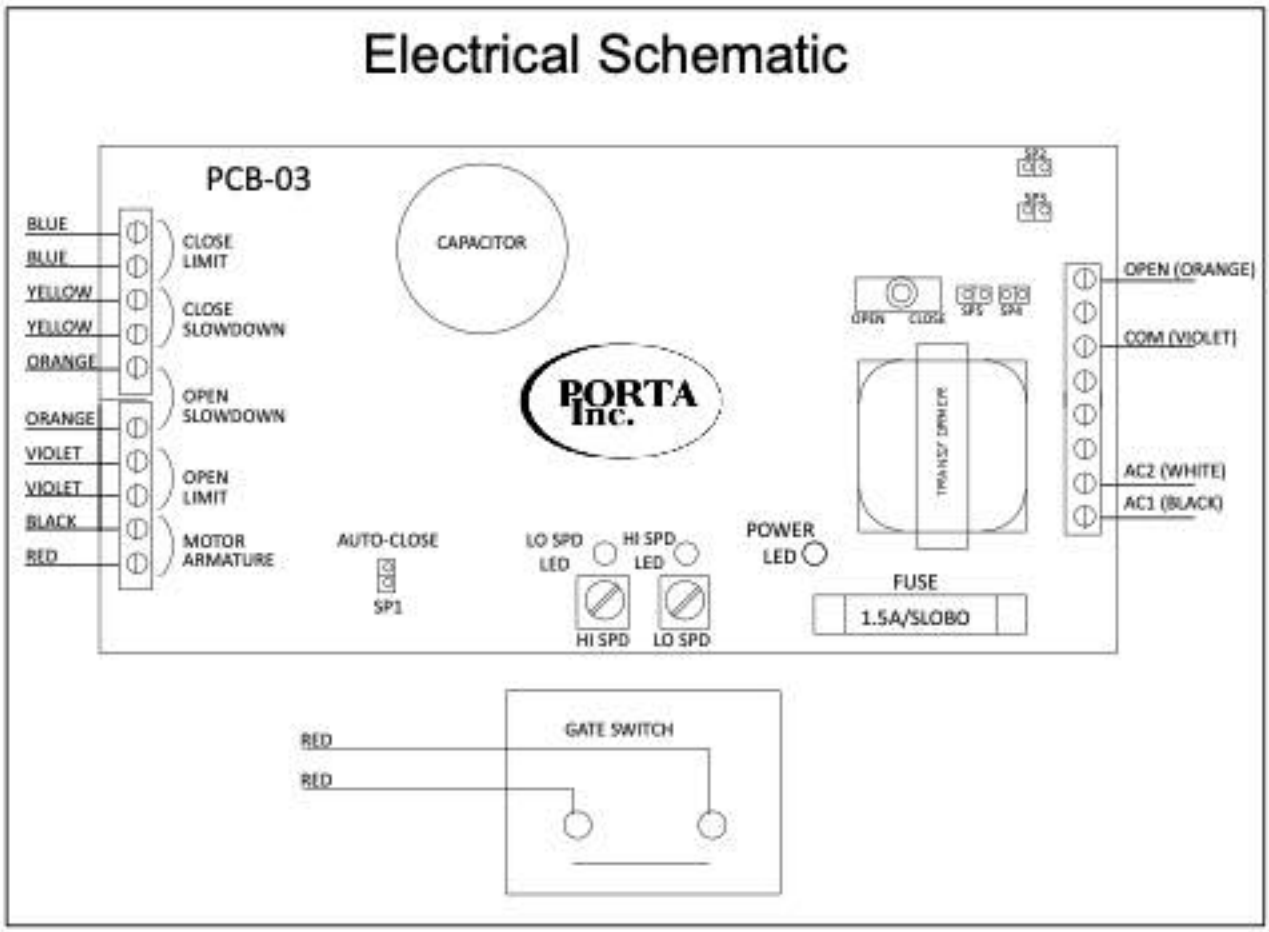

- AUTO CLOSE: Installing jumper SP1 enables this feature.
- Jumpers SP2 thru SP5 are used to select the control signalization.
- Factory jumper setup is for 12/24 VDC signalization and Auto Close enabled.

PATENT PENDING

Porta Inc.
250 Hamilton Rd.
Arlington Heights,IL 60005

Phone: (847) 593-4900
Fax: (847) 593-1394
website: emiporta.com

Page 7

KIS1OO-Accordion Gate Operator

TROUBLESHOOTING

Problem	Possible Cause	Corrective Action
No Function	No power	Verify 120VAC between "AC1" & "AC2".
	Fuse	Check Fuse "F1".
	Controller Signal	Check operation with test switch.
	Faulty Limit	Verify that limits are closed when not actuated.
No High Speed	Faulty Slow down	Verify that slowdowns are closed when not actuated.
No low speed	Slow down not actuating	Verify that the cam engages the slow down.
	Faulty Slow down	Verify that slowdowns have continuity when actuated.
Motor turns but no gate movement	Loose Pulleys	Verify that the drive and driven pulley's are tight on their shafts.
	0-Ring	Check for loose or missing o-ring.
	Gate	Check gate for excessive bind.
Reverse operation	Board wiring or controller wiring	Check operation with test switch
		DOWN is open. Swap M+ & M- if necessary.
Excessive breakaway force	Step 1	Put small washers on the magnets opposite the flag. If force is still excessive, go to step 2.
	Step 2	Remove a magnet. If force is still excessive, put small washers on the remaining magnet opposite the flag.
Board is powered but does not engage	Unit has stalled out	Step 1: Shut off power supply to unit. Step 2. Identify and remove the cause of the stall. Step 3: Power unit back up.
Gate breaks away from operator	Magnet assembly has no pivot action.	Loosen lock nut (in ¼ turns) until magnet assembly pivots.

ATTENTION!

If the resistance to gate closure exceeds the magnetic coupler, the gate dis-engages from the operator and becomes a MANUAL GATE. Advise the user that they must do one of the following:

- Close the door manually to run the elevator
- Cycle the door to re-engage the magnetic coupler.

PATENT PENDING

PORTA Inc.
Porta Inc.
250 Hamilton Rd.
Arlington Heights,IL 60005
Phone: (847) 593-4900
Fax: (847) 593-1394
website: emiporta.com

Appendix F
Savaria Link Option

For information on the Savaria Link option, refer to the following document:

- Savaria Link Installation and Setup Guide, P/N 001180

Appendix G
Speed Arrestor Spin Test

INSPECTION NOTE

Savaria Speed Arrestor are set and sealed at the factory per 2.18.3
If the local Authority Having Jurisdiction requires site verification during initial or periodic inspection it shall be done with a spin test based on requirements of A17.2 part 2.13.2 as modified for Private Residence Elevator application permitted by ASME A17.1 interpretation 19-2665 (see spin test guide in Appendix G)
Testing of governor application shall be done as specified in ASME A17.1 part *8.10.2.2.2(ii)(2)(-a)* by manually tripping the system at the rated speed and no load in the car.

For use with kit number 327208

Sr. No.	Name	Part Number	Figure
1	Speed Arrestor Belt - 60" Length	327207	
2	Shaft-Pulley Assembly	327206	
3	Electrical Tape - 24" Length	107925	N/A

Figure 185:



USE BELT 327186

Figure 186

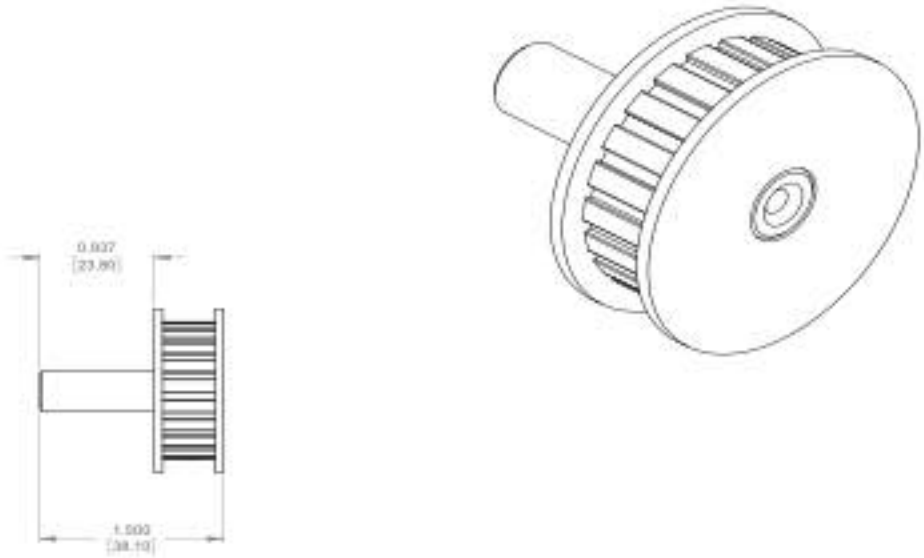

Testing Procedure

1 With the elevator even with any landing above the bottom landing, remove the power from the elevator by opening the main disconnect (and using lock-out, tag-out procedures) and ensure that the UPS is off.

NOTE
This test should be done before installing the COP wall. If performing this test after the COP wall is installed, remove the COP.

2 Remove the belt from around the Speed Arrestor by releasing the tension on the Speed Arrestor belt by loosening the clamp on the tensioner at the bottom of the hoistway. Ensure that you follow your company's safety procedure in order to enter the pit safely.

Cut 60" (1524mm) length of timing belt (Type: XL 0.2" (5.08mm) pitch, 0.25" (6.35mm) width, Figure 1). The location where the cut is made must be the same and not interfere when connected like the photo below. As a guide, a small section can be cut and held against the connection to ensure the belt is cut properly.

3 As a guide, a small section can be cut and held against the connection to ensure the belt is cut properly.

Figure 187



4 Install the timing belt around the Speed Arrestor pulley, ensuring that the teeth of the belt are facing the Speed Arrestor wheel.

Figure 188





5 Make a loop and hold the ends of the belt against the teeth on the bottom side of the belt, ensure that the belt is smooth and able to go flat

Figure 189

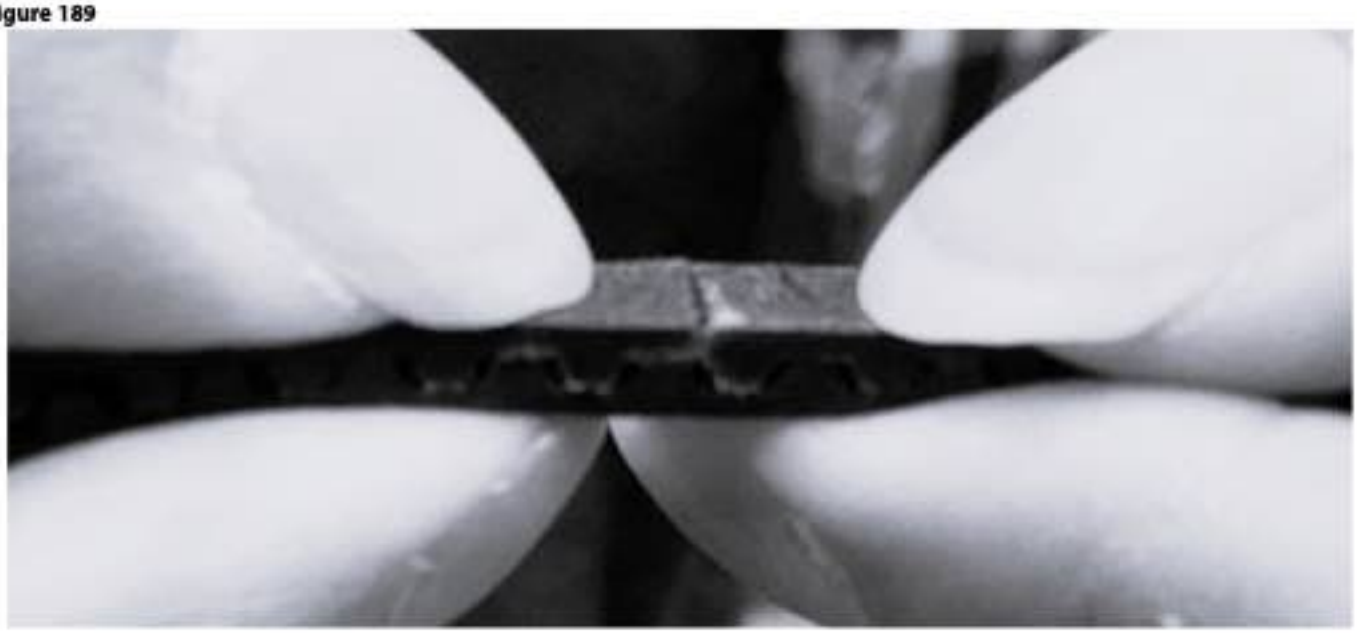

6 Use electrical tape (or some other type of sticky tape) to connect the belt while holding it like in the previous step. Cut about 3" (76mm) of tape and put it at the flat, back of the belt (opposite the teeth). Ensure the ends of the belt are in the center of the tape. Two people may be required to do this.

Figure 190



7 Cut about 9" (229mm) of tape and put it on top of the smaller strip of tape installed before. Ensure the ends of the belt are in the center of the tape. Press on the tape to ensure that it is stuck on the belt.

Figure 191

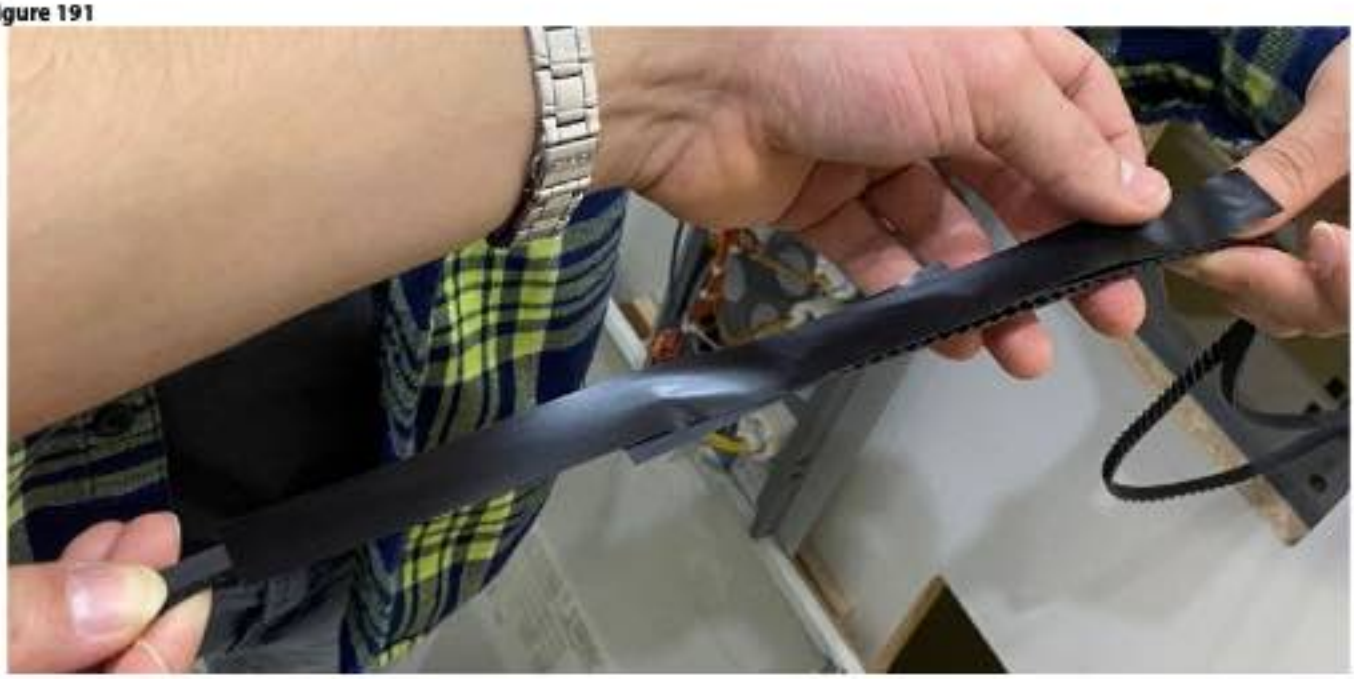

8 Cut the sides of the tape to match the width of the belt.

Figure 192



9 Install the shaft with the timing pulley (Figure 181) in a hand drill. Note that the pulley must be the same size as the one installed on the Speed Arrestor.

10 Assemble the pulley installed in the hand drill with the timing belt as shown in the image below. The Speed Arrestor should rotate as shown in the Speed Arrestor picture.

Figure 193



11 Set the tachometer to RPM and touch it to the center of the drill as shown. The OSG tripping under 214.3 RPM is acceptable by code (214.3 RPM = 75 ft/min).

NOTE
The information for tripping speed calculations are located on Figure 194.

12 Hold the tachometer wheel against the hole in the center of the shaft on the drill and slowly accelerate the drill while reading the tachometer.

13 Ensure the Speed Arrestor engages and stops prior to reaching 214.3 RPM.

14 Return the elevator's Speed Arrestor belt installed in the hoistway to its standard location and ensure it has proper tension.

15 Turn power back on and test the elevator for proper function.

Figure 194: Speed Equation

$$Cabin\ speed = \omega * r$$

ω: Rotational speed of the pulley.
r: Radius of the pulley.

$$\omega = 214.3\ \frac{rev}{min} * 2\pi\ \frac{rad}{rev} = 1346.487\ \frac{rad}{min}$$

$$r = \frac{Pitch\ diameter}{2} = \frac{1.337}{2}\ in = 0.6685\ in = 0.0557\ ft$$

$$Cabin\ speed = 1346.487\ \frac{rad}{min} * 0.0557\ ft = 75\ \frac{ft}{min}$$

Pulley specs:

Number of grooves: 21
Pitch Diameter: 1.337"
Outside diameter: 1.317"
Outside diameter of pulley flanges: 1.563"

Appendix H
RATH 2400 Installation and Operation

System Requirements

TELCO Voltage: 48-52vdc on an analog line with at least 25mA of line current and valid dial tone. Line must be dedicated for a 2400 Series phone.

Getting Started

Carefully open the shipping box and remove contents. Inspect the phones for damage. If there is any damage, call 800-451-1460 immediately to arrange corrective action.

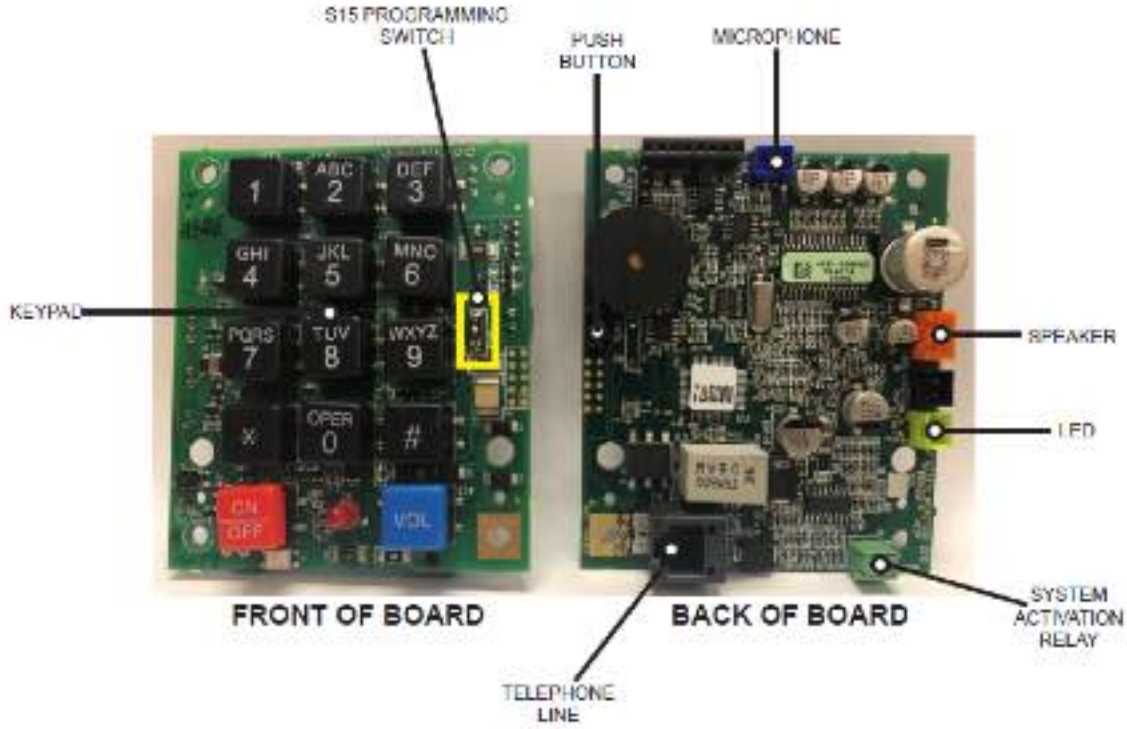

Line Connections

Connect a dedicated phone line to the RJ11 jack on the back of the 2400 Series phone board labeled TEL LINE using one of the following recommended methods:

1. Crimp the phone line on to the center pins of a standard RJ11 jack and plug into TEL LINE input on the back of the 2400 Series phone.
2. Connect the phone line to a female RJ11 jack then take the phone line cord provided with the 2400 Series phone from the jack to the TEL LINE input on the 2400 series phone.
3. Connect the phone line to a biscuit jack style connector. Screw the phone line onto red and green terminals on the back of the biscuit jack. Take the phone line cord provided with the 2400 Series phone from the biscuit jack to the TEL LINE input on the back of the 2400 Series phone.

RATH® phones use the center pins of the RJ11 (red and green) for the outside phone line. Phone is not polaritysensitive.
Note: Do not cut off the end of the phone line cord and splice the phone line directly onto the line cord.

It is recommended that the wiring used inside the traveling cable or horizontal cabling is a 20 - 22 AWG twisted shielded pair with the shield grounded at the elevator controller end only. This will help reduce or eliminate any possible interference.

The phone line can be checked through the 2400 Series phone by pressing the **ON/OFF** button on the keypad.After pushing the **ON/OFF** button, the phone should have dial tone. Once the phone has dial tone, use the keypad to dial a number. Verify that the call connects and has two-way communication. Press the **ON/OFF** button again to end the call.

Quick Set-up

RATH® 2400 Series phones can only be programmed using the onboard keypad. When programming 2400 Series phones, it is imperative to move quickly through the programming due to many Telco systems providing limited off-hook time.

Program Number

1 Press the **ON/OFF** button (phone should give a dial tone)
2 Slide the S15 switch down into "ON/PROGRAM" position
3 Press **1, *,** the number you want the phone to dial, blue **VOL** key

Program Message

1 Press **7, *, 2** for message to play twice
2 Press **4, *** (phone will start beeping), speak message when beep ends, press blue **VOL** key when finished speaking (message will playback automatically)
3 Slide S15 switch back up into "1" position
4 Press the **ON/OFF** button to turn the phone off

Detailed Programming

Programming Primary Phone Number:

1 Press the **ON/OFF** button (phone should give a dial tone)
2 Slide the S15 switch down into "ON/PROGRAM" position
3 Press **1, *,** the number you want the phone to dial, blue **VOL** key
4 Slide the S15 switch back up into "1" position
5 Press the **ON/OFF** button to turn the phone off

Note: In situations where a delay is needed, such as needing an 8 or 9 to dial out, use the **ON/OFF** button on the keypad for a pause. The button can be pressed multiple times for more of a delay. One PAUSE = 1 second.

Programming Secondary Phone Number:

1 Press the **ON/OFF** button (phone should give a dial tone)
2 Slide the S15 switch down into "ON/PROGRAM" position
3 Press **2, *,** the number you want the phone to dial, blue **VOL** key
4 Slide the S15 switch back up into "1" position
5 Press the ON/OFF button to turn the phone off

Note: In situations where a delay is needed, such as needing an 8 or 9 to dial out, use the **ON/OFF** button on the keypad for a pause. The button can be pressed multiple times for more of a delay. One PAUSE = 1 second.

Programming Location Message:

RATH® phones can play a location message when the call is answered. This feature is used when the phone is calling a phone number that cannot identify where the call is coming from by caller ID, or needs more location information than caller ID can provide. This feature is turned on by default. Perform the following steps to program the location message feature.

Turning Location Message ON:

1 Press the ON/OFF button (phone should give a dial tone)
2 Slide the S15 switch down into "ON/PROGRAM" position
3 Press **7, *, (1, 2, or 3)** (1 will play message once, 2 will play message twice, 3 will play message on a loop until the operator presses the **#** key 4 times)
4 Press **4, *** (phone will start beeping), speak message when beep ends, press blue **VOL** key when finished speaking (message will playback automatically)
5 Slide S15 switch back up into "1" position
6 Press the ON/OFF button to turn the phone off

Turning Location Message OFF:

1 Press the **ON/OFF** button (phone should give a dial tone)
2 Slide the S15 switch down into "ON/PROGRAM" position
3 Press **7, *, 0**
4 Slide the S15 switch back up into "1" position
5 Press the **ON/OFF** button to turn the phone off

Note: The answering party can replay the message anytime by pressing ***, ***.

Resetting the Phone:

The phone can be reset by performing the following steps:
1 Press the **ON/OFF** button (phone should give a dial tone)
2 Slide the S15 switch down into "ON/PROGRAM" position
3 Press **9, *, 7, 2, 8, 4**
4 Press **5, *, 1**
5 Slide the S15 switch back up into "1" position
6 Press the **ON/OFF** button to turn the phone off

Note: Resetting the phone will not clear out any programmed numbers or messages.

Programming Talk Timer:

Talk Time is the amount of time that two-way communication will occur after a call is answered. When Talk Time expires, the phone will hang up and the button on the phone will need to be pushed again to re-establish a call.
1 Press the **ON/OFF** button (phone should give a dial tone)
2 Slide the S15 switch down into "ON/PROGRAM" position
3 Press **6, *,** 3 digit number in minutes (3 minutes = 003, 20 minutes = 020)
4 Slide the S15 switch back up into "1" position
5 Press the **ON/OFF** button to turn the phone off

Note: The lowest Talk Time can be set to is 1 minute. The longest is 999 minutes.

Programming Auto Answer:

Auto Answer allows the 2400 Series phone to answer if called without someone needing to push the call button.This feature is required by code. By default, all 2400 Series phones are manufactured with Auto Answer enabled.This feature should only be turned off in a home or private elevator application.
1 Press the **ON/OFF** button (phone should give a dial tone)
2 Slide the S15 switch down into "ON/PROGRAM" position
3 Press **8, *, 1 or 2** (1 is ON, 2 is OFF)
4 Slide the S15 switch back up into "1" position
5 Press the **ON/OFF** button to turn the phone off

Volume Adjustment:

If the voice of the person you call is not loud enough in the phone speaker, increase the volume by pressing theON/OFF button. When the phone has dial tone, press the blue VOL button. Each time you push the VOL button,the volume will go up or down one level. 2400 Series phones have three volume levels: high, medium, and low.When desired volume level is reached, push the ON/OFF button to save the change.

Troubleshooting

Phone will not let you get through programming:

- Program the phone while it is on an active call:

1 Press the **ON/OFF** button

2 Call your cell phone number and answer the call

3 Slide the S15 switch down to "ON/PROGRAM" position

4 Perform the desired programming steps on the 2400 Series phone keypad

5 Slide the S15 switch back to "1" position

6 Press the **ON/OFF** button on the 2400 Series phone (this will also hang up the call on your cell phone)

- Verify the voltage on the phone line meets the minimum needed for the phone. See the "System Requirements" section for voltage range.
- Exit programming mode and re-enter. Attempt programming steps again.

Phone does not call out:

- Verify the voltage on phone line and dial tone. Phone lines can have voltage but no dial tone. 2400 Series phones must have dial tone or a valid ring down circuit to call out properly.
- Verify the push button is connected to the "PANIC" connector on the back of the circuit board.
- Remove the push button from the black "PANIC" connector on the circuit board. Use a small piece of wire or a small screwdriver to short 2 pins inside of the connector on the circuit board. If the phone calls out after shorting pins on the circuit board, there is a problem with the push button.
- Double check the number being programmed into the 2400 Series phone. Verify the phone line doesn't require an access digit such as an 8 or 9 to dial out or have any line restrictions such as long distance or toll restriction.
- Verify the phone line going into the 2400 Series phone is dedicated. 2400 Series phones cannot share a phone line with anything other than another 2400 Series phone.
- Verify phone is in Standard Mode. See "Resetting the Phone" section for instructions.

Phone does not hang up:

- 2400 Series phones require either a CPC or Open-Loop Disconnect Signal provided by the phone line to properly disconnect. This is a setting on the line that the phone provider should be able to supply.
- Before the receiving party hangs up the call, they can press ***, #** to disconnect.
- Lower the Talk Time on the phone. This will not hang up the phone instantly, but it will lower the amount of time the phone will stay off-hook. See the "Detailed Programming" section for instructions.

Phone hangs up after the call is answered:

- Phone may be in the wrong mode. Verify the phone is in Standard Mode. See "Resetting the Phone" section for instructions.
- There may be excessive noise on the phone line. Connect an analog phone to the line and place a call out. Listen for any interference (buzzing, humming, etc.) on the line. If any noise is heard, the phone line must be cleaned up.
- Verify the phone line going into the 2400 Series phone is dedicated. 2400 Series phones cannot share a phone line with anything other than another 2400 Series phone.

Phone volume is too low:

- The volume level on the phone may need to be increased. See the "Volume Adjustment" section for instructions.
- Line voltage and line current on the phone may be too low. See the "System Requirements" section for the appropriate range.
- Verify the speaker is lined up with the holes on the panel and is not blocked.
- Verify the microphone is lined up with the holes on the panel and is not blocked.

THIS PAGE WAS INTENTIONALLY LEFT BLANK

Eclipse Residential Elevator (with Micro-6 Controller & Speed Arrestor)

INSTALLATION GUIDE

Part No. 001276, rev. 017
© Copyright 2024

www.savaria.com

Support
2 Walker Drive
Brampton, Ontario, L6T 5E1, Canada
Toll free (800) 791-7999
Fax: (905) 791-2222

savaria