handicare
by Savaria®

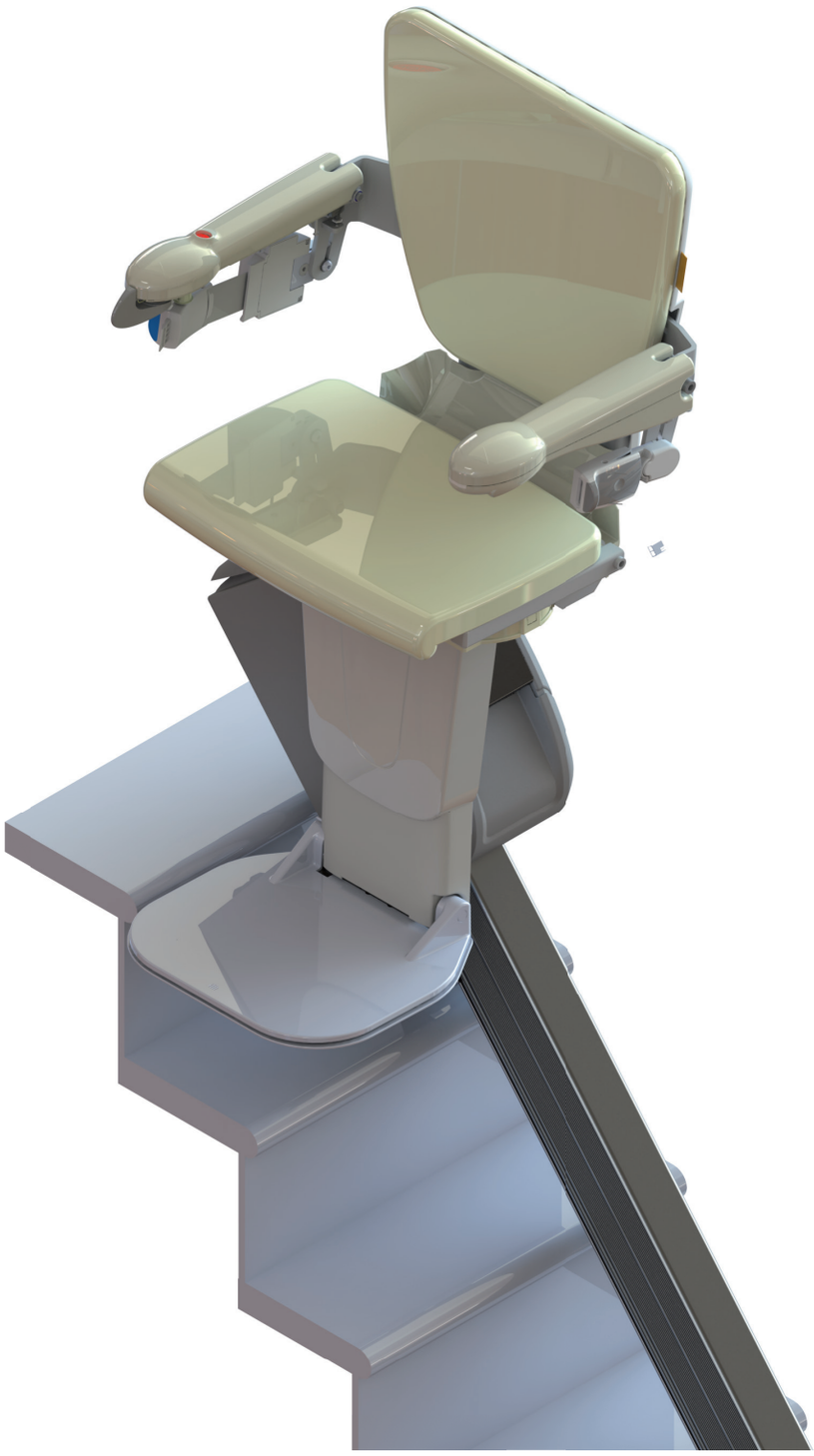

Handicare 1100 Style
Sales guide

Contents

1	Design	4
2	Intended user	4
3	General Information	5
4	Seat	6
5	Upholstery	6
6	Operating toggle	8
7	Armrest switches	9
8	Key switch	9
9	Emergency stop	10
10	The two-way voice communication	10
11	Seat swivel	11
12	Powered seat swivel	12
13	Footrest to seat height	12
14	Footrest	13
15	Powered footrest	14
16	Diagnostic display	15
17	Seat belt	16
18	Powerpack	17
19	Batteries	18
20	Power supply/charging	19
21	Remote control	20
22	Rail	21
23	Applications	22
24	Dimension sketch	23
25	Overhead clearance	24
26	Rail intrusion into the staircase	25
27	Rail intrusion at the bottom of the stairs	26
28	Slide Track	27
29	Easy hinge	31
30	Rail intrusion at the top of the stairs	32
31	Zero intrusion	33
32	Stairs with offset steps	34
33	Measuring the stairs	35
34	Rail cutting	36
35	Certificate	37

1 Design

Our design team have put a lot of thought into the Handicare 1100 Style. We have worked hard to deliver a stairlift that not only provides your customer with a great solution but is also good for our trade partners to stock, install and maintain. For example, making batteries easier to replace was a must.

The Handicare 1100 Style is a new, unique and patent 4 wheel drive system based on friction drive. Compared to all other straight stairlifts there is no greasy gear rack on the rail.

We have not only considered easy of use but have paid attention to durability in high wear areas to deliver a robust, long lasting solution.

Aesthetics and recognisability were also high on our list to ensure that our Handicare 1100 Style partners are able to offer a product that is reliable and well known. Therefore we used the popular Style seat. We have made the lift compact where possible and this is evidenced by the Handicare 1100 Style's slim waistline. This guide is designed to provide you with an overview of the Handicare 1100 Style Stairlift. If you have any questions please do not hesitate to contact a member of the Handicare team who will be more than happy to help.

2 Intended use

Intended user

1. Persons (exclusively) whose mobility has been reduced to such an extent that they are not able to move between floors along the stairs.
2. Users must be able to reach a safe location via the stairs in an emergency or, If they can't, they have enough help to do so.
3. The height of the chair must be tailored to the user's body size so that the feet are on or above the footrest when the user is seated.
4. Users must be able to either see or hear or if not receive assistance in the use of the stair lift.
5. Users must have sufficient strength and mental capacity to independently operate the controls and seat belt of the stair lift or with the assistance of a carer be able to remain in a stable position through the lift's travel.
6. Users must have sufficient strength and mental capacity to independently understand and perform the safety instructions as written in the user manual or receive assistance in the use of the stair lift.
7. Users younger than 12 years and smaller than 1.35 m shall not be allowed to independently use the stairlift.
8. Users may not weigh more than the indicated maximum load of the stairlift.
9. The stairlift may only be used by one person at a time.

3 General information

Definition
A straight stairlift suitable for the transport of one person in an indoor situation only.

Details

Power supply	90-230V~
Frequency	50/60Hz
Current	1.0 Amp
Power consumption	0-36 Watt
Max. load (inclination 25°-45°)	140 kg [308 lbs]
Max. load (inclination 45°-50°)	130 kg [286 lbs]
Max. load Easy hinge	see standard configuration
Max. load Slide Track	120 kg
Speed **	0.09 m/sec (max)
Noise	56 dB
Minimum stair length	3 steps*
Standard rail length	4700 mm (2 x 2350 mm / 2x 92.52 in)
Maximum rail length	7050 mm (3 x 2350 mm / 2x 92.52 in)
Rail colour	aluminium anodised, self colour
Inclination standard	25˚ - 50˚
Inclination easy hinge	25˚ - 50˚
Inclination zero intrusion	25˚ - 45˚
Inclination Slide Track	37˚ - 50˚
Ambient temperature	0° - 40° Celsius
Relative humidity	20% - 80%

* Does not apply for easy hinge and Slide Track.
** The speed of the lift is fixed and dependent on the inclination of the stairs and the user weight and cannot be adjusted.

Standard features
- Retractable seat belt
- Fold up seat, armrests and footrest
- Key operated switch
- Emergency stop
- Soft start and soft stop
- Automatic stop at the top and bottom of the stairs
- Footrest safety edges
- Full cover safety edges
- Wall-mounted hand held remote controls at the top and bottom of the stairs
- 2 rail sections, each 2.35m / 92.52 in
- Continuous charge

Available options
- Carpet spacer
- Longer rails up to 7m / 275.59 in
- Powered swivel seat
- Powered footrest
- Easy hinge
- Zero intrusion
- Slide Track
- On/off switch
- Velcro belt

4 Seat

The Handicare 1100 Style will be delivered with the Style seat:

- The upholstery is made of flame retardant fabric.
- Easy to clean.
- Both armrests, seat and footrest can be folded up separately to provide optimum space on the stairs.
- You cannot ride in a swivelled position facing downstairs or upstairs.
- The lift will not operate if the seat is not in travelling locked position.
- The offset seat swivel enables the user to get closer to the landing to get on and off the seat more safely.
- The seat swivels independently from the footrest, thereby enabling the user to push against the footrest to turn the standard manual option to face the stairs.
- The swivel handle is pushed down to release the seat to swivel which makes it easier to operate for users with a decreased hand function.
- The seat can be installed in 4 different heights.
- Footrest landing can be flush or above the floor.
- The seat is non handed and can be used lefthand or right hand. This makes stock held more flexible if required.

Option	**Available**
Manual	√
Powered swivel	√
Powered footrest	√
Fully powered	√
Upgrade after installation	√

5 Upholstery

- The Handicare 1100 Style's Style seat is supplied with a vanilla beige leather look upholstery.
- The easy to clean upholstery has been designed to be simple to replace if required.
- The upholstery is standards compliant (EN81-40) and is therefore flame retardant.

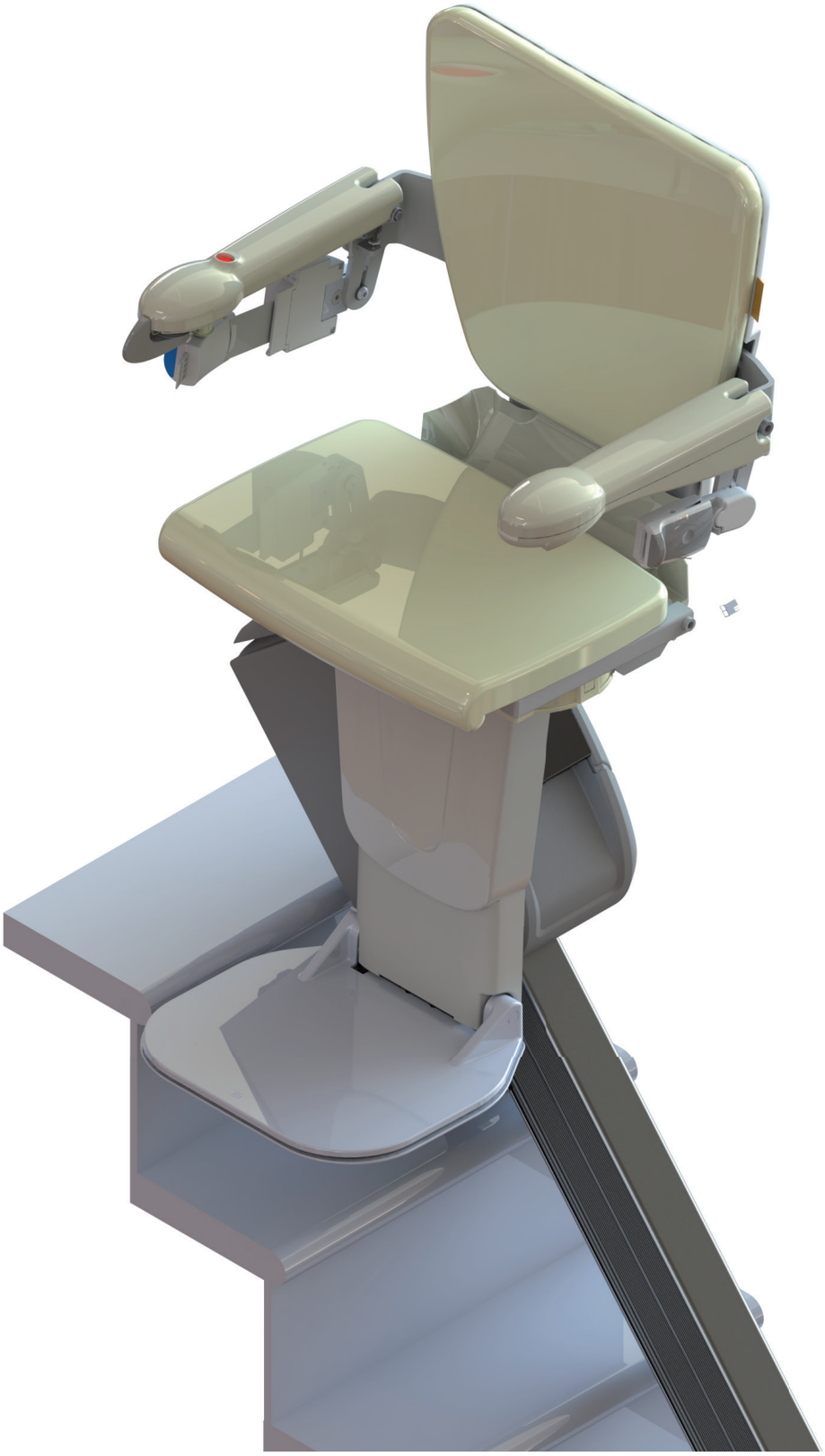

6 Operating toggle

The Stairlift is activated by holding the toggle control in the direction of desired travel. The Handicare 1100 Style is a ‘hold to run’ stairlift which means it will stop as soon as the operating toggle is released.

The toggle is supplied on the right armrest. The Handicare 1100 Style’s modular design means it is easy to re-hand if required.

Benefits

- Logical operation in the direction of movement makes the Handicare 1100 Style easy to understand.
- The operating control is user friendly, it only requires minimal pressure to operate and its positioning makes it easy to operate from the hand or wrist.
- The operating control has priority over the remote control, so the user is always in control.
- Super light and simple to use control.



7 Armrest switches

User safety is paramount in our mind: the Handicare 1100 Style can only be operated from the toggle if the armrests on the down site is fully folded down.

User convenience is also a priority so the Handicare 1100 Style can be operated, via the remote control, with the arms folded up. This means it can be folded up and sent between floors to park to maximise clear space in the hall and on the stairs.

8 Key switch

The key operated switch is standard fitted and is provided with two keys.
The key switch is fitted in the underside of the armrest.
Extra keys can be ordered from Handicare at the webshop (www.handicarepartners.com).

- Removal of the key will disable the entire system.
- Removal of the key prevents unauthorised use.

On position
When the key-operated switch is in the ‘On’ position (9 o’clock/-) the stairlift can be operated using the control or the remote control.

Off position
When the key operated switch is in the ’12 o’clock/|’ position the stairlift cannot be operated from the toggle or the remote control.

The battery will also continue to charge when the key operated switch is in the ‘Off’ position (12 o’clock/|).



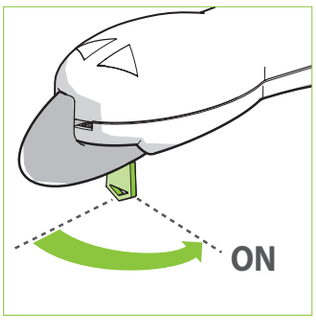

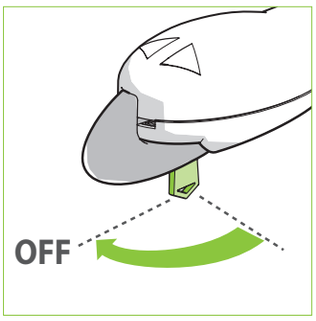

9 Stopbutton

The Handicare 1100 Style has a stopbutton. In an emergency, press the stop button once. The lift stops straight away. To release the lift, press the stopbutton again.




10 The two-way voice communication (one touch alert)

In the rare event of a lift breakdown, our communication system allows users to call their emergency contacts, such as a friend or family member, directly from their stairlift.
They can save up to three contacts, so if one doesn't answer, they can work through the contacts - ideal for when someone lives alone.
To use: press and hold the yellow button for three seconds.
This then dials the input numbers consecutively and when connected the user is able to speak directly with their chosen contact.



- Partners can choose to have the One Touch Alert delivered as a kit for them to fit.
- They can also choose to have this pre-installed in the factory.
- Partners will be responsible for purchasing and managing the sim cards.
- The sim cards need to be a nano sim for mobile calling, and no data connection is required.
- Instructions on the App can be found in the Installation Manual.

The surveyor will have the One Touch Alert detailed on the risk assessment form, where it must be discussed.
Everyone must sign a waiver if it's decided they do NOT want it.
Contacts are set up as three different contacts, then Handicare customer services, followed by the emergency services - these are both optional for the customer, as some may prefer not to have the last two in case of accidental dialing.
There is an App and instruction guide as to how to use the App, which is included in the owner's manual.
They can scan the QR code to follow simple instructions, but this will be used rarely and only if the customer wants to change the contact details stored within the App.
The App can be downloaded on either Android or iOS devices.

The Two-way voice communication device is a demand according to EN 81-40:2020, and can be omitted where dependable assistance is always present or where alternative reliable means of two-way voice communication is installed in the building which can be activated from the stairlift is all positions.

The one touch alert can not be used in combination with the zero intrusion in the lowest seat position.

11 Seat swivel

The manual swivel handle is operated by pushing down which means it requires less upper body strength to operate than a pull up handle.

The seat swivels independently from the footrest, thereby enabling the user to push against the footrest to assist with turning the seat round towards the landing.

The seat post is offset so the user comes further on the floor to get on and off the seat more safely.

The stairlift cannot be operated again until the seat has been returned to the locked travel position before use.



12 | Powered swivel seat

The Handicare 1100 Style can be upgraded to include a powered swivel which means that the seat can be swivelled by retaining pressure on the toggle when the unit reaches the top of the track.

The seat should be returned to the locked travel position to use the stairlift again, it will not swivel in the downward direction.

The swivel can also be operated at the top of the stairs from the remote control which means the stairlift can be sent between floors in multi user locations.

In case of emergency the swivelled seat can be released by pushing the manual override button on the side of the seat, whilst rotating the seat by hand.

The powered swivel mechanism is available as a module.

The optional modular powered swivel mechanism has been designed to enable on site retrofitting.

13 | Footrest to seat height

The height between the footrest and the seat can be adjusted in 4 different heights:

- 430 mm
- 460 mm
- 490 mm
- 520 mm
- 16.92 in
- 18.11 in
- 19.29 in
- 20.47 in

The height and angle of the footplate can be adjusted, by the screws on the backside of the footrest.

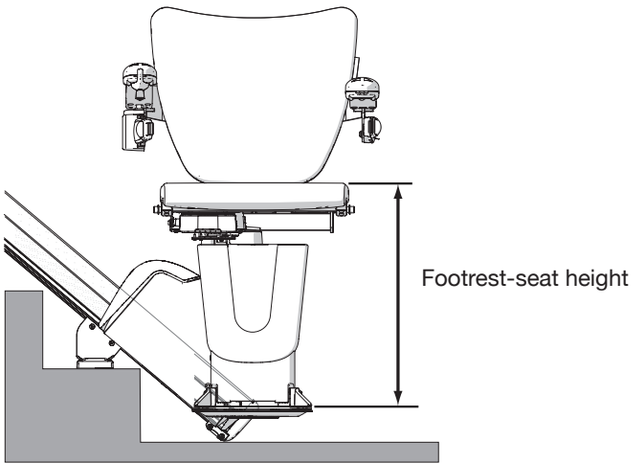

14 Footrest

The Handicare 1100 Style footrest has safety edges that will automatically stop the stairlift mid journey in the event that an object becomes jammed between the footrest and the stairs.

If the safety edge is activated the lift can only be moved away from the obstacle to facilitate its removal. The stairlift can continue the journey, once the obstacle has been removed.

- The footrest can be folded upwards when the stairlift is not in use to maximize the clear space in the hallway and on the stairs.
- The maximum fold up force is 0.5kg [1.1 lbs], minimizing the risk of injury.
- The safety edges are free moving to avoid trapping solid objects.
- The wipe clean footrest is easy to clean.
- The footrest has an anti-slip surface to help provide a stable platform for users to push against when operating the manual swivel.
- Adjustable footrest angle.

The angle of the footrest can be adjusted by two bolts on the backside of the footrest.
This makes it easier for the enduser to position his feet.

The footrest has no raised edges, so its easier to swap over the feet to the top floor when swiveling the seat.

The size of the large footrest has more space for the feet than the previous standard footrest.

In case the user has bad control over his feet, a fit restraint kit (article number 226658.5001) can be installed, which is available on the web shop at www.handicarepartners.com

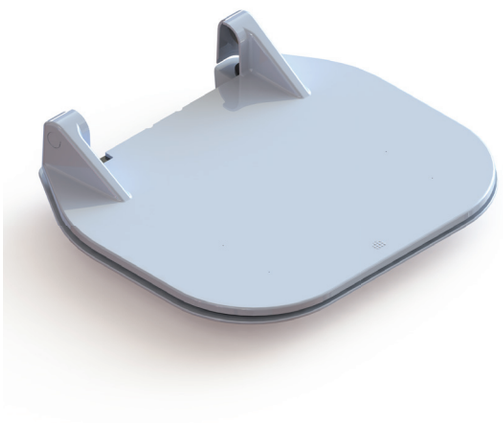

15 Powered footrest

The footrest can be easily folded manually, however if the user is reluctant or unable to bend there is the option to add a powered footrest.

The powered footrest is operated by a switch located under the armrest. Like the operating toggle, the footrest switch operates in the direction of movement. Switching towards the unit will fold the footrest up, switching it away from the unit will lower the footrest.

Just like the powered swivel, the powered footrest is a module as well and can be retrofitted.





16 Diagnostic display

The diagnostic display is located on the top of the stairlift unit underneath the black transparent cover. The numbers displayed will help the user easily identify the status of their stairlift. The diagnostic codes are listed in the user and installation manuals.

In the event that the lift is left off charge it will beep for 40 seconds to alert the user to the need to check the power supply.

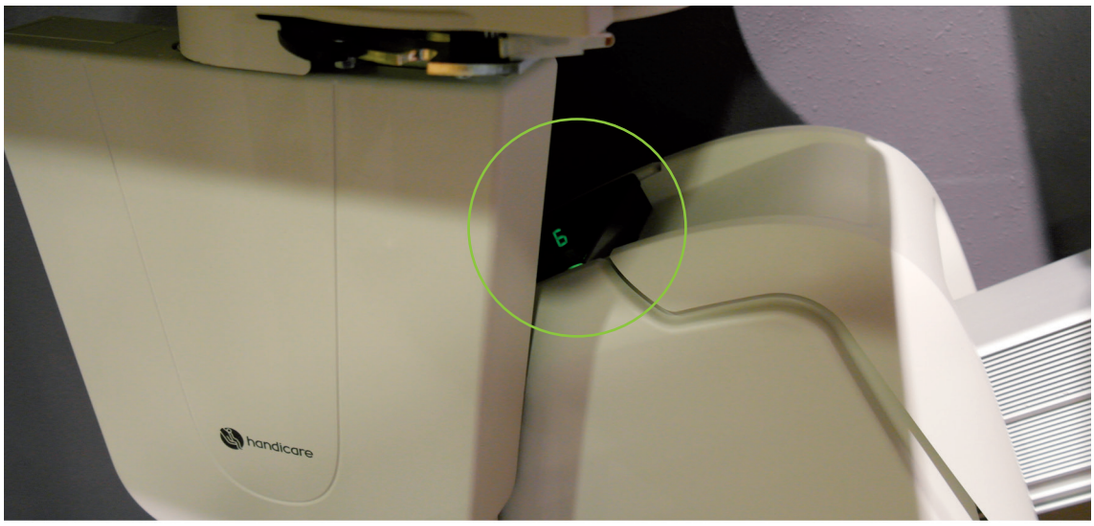



17 | Seat belt

Style
The seat comes with an easy to use seat belt as standard. The belt is pulled across the lap of the user when seated and clips into the buckle. It is then easily released by pressing the front of the buckle, the belt will then retract into the belt housing in a controlled manner – much like the seat belt in a car.
The retractable seat belt means that the belt is kept untangled and out of sight when the stairlift is not in use. As with a car seat belt, once the belt is clipped the housing will lock the belt in place thereby preventing over extension during use. The seat belt should be used to increase safety every time the stairlift is used.

Benefits of a retractable safety belt
- The retractable nature of the seat belt means that it will fit snugly to a range of user size and shapes.
- The position of the buckle and the holder can be adjusted to best suit needs of each user.
- The buckle has been designed to hold the belt in place securely but to be easily released by the user.



Velcro seat belt
The Velcro seat belt is available as an option on the Style seat of the Handicare 1100. You can order the seat belt on the webshop at www.handicarepartners.com.



The article number is 658001.5009 for the standard Velcro belt (900 mm x 50 mm) and 658001.5011 for the large Velcro belt (1700 x 50 mm).

The Velcro seat belt is often advised for:
- Users with back problems who can't twist to secure and release the belt
- Users with bad dexterity of the fingers (people with bad arthritis)
- Users with little feeling in the fingers or poor grip
- Users with Ulnar Deviation
- Users with reduced mental capacity who tend to play with buttons and seat belts
- Larger users where a seat belt is too short
- Users who need side transfer and the seat belt mechanism sometimes gets in the way

18 Powerpack

The power pack is not handed so it can be used on either side of the staircase.
This makes stock held more flexible and the system well suited for relocation.

The speed is controlled electronically:
the soft start/stop design reduces the perception of acceleration or deceleration making the journey smooth for the user. This eliminates jolting for the user thereby lessening impact on the back and the chances of the user slipping forward during travel.

The 4 quiet motor drive mechanisms operate on 24V and are enclosed by creme (RAL 9002) easy to clean safety covers.

These safety covers will automatically stop the stairlift mid journey in the event that an object becomes trapped between the unit and the stairs.

If the safety cover is activated the lift can only be moved away from the obstacle to facilitate its removal. The stairlift can continue the journey, once the obstacle has been removed.

- The automatic stop prevents the lift from overrunning at either end of the track.
- The safety edges on the footrest are continued on the frame parts and carriage, in order to prevent any risk of injuries.



19 Batteries

The Handicare 1100 Style runs on two 12V batteries. These dry batteries have no risk of leaking and are maintenance free.

The batteries are charged when the lift is parked anywhere on the rail due continuous charge.

The batteries provide back up in the event of a power failure and will support 10 trips when fully charged.

The expected lifetime of the batteries is three years, this will vary depending on usage and environment.

On/off switch
The on/off switch is an option on the carriage and switches off the power on the lift.
When switched to the off position the lift will not operate from the toggle or the remote controls.
When switched to the off position the lift will not charge



20 Power supply/charging

The Handicare 1100 Style does not require a dedicated power supply: power can be supplied via an existing wall socket no more than 8m / 314.96” from either end of the rail. This makes it quick to install and reduces the requirement for disruption to décor and no requirement for building work.

The battery charger’s power supply can be connected to the top or bottom end of the rail.

The installer should connect the mains power supply in accordance with local regulations.

The power consumption of the battery charger is less than 20 Watt which means the annual running cost is similar to that of a small light bulb. Consequently the installation of a dedicated power supply is not required.

21 Remote control

The Handicare 1100 Style is supplied with two wall mounted, hand held remote controls as standard. The user can choose where to have the handset cradles mounted to ensure that a handset is always readily available at either end of the track.

Each has two tactile buttons, which control the stairlift's movement up and down the staircase.

- The slightly domed (convex) green button with the triangle that points upwards when in the wall mount will send the lift up the stairs when pressed.
- The slightly sunken (concave) red button with the triangle that points downwards when in the wall mount will send the lift down the stairs when pressed.
- Either button will need to pressed and hold to maintain travel.
- Releasing either button will cause the stairlift to stop.
- When a button is released it will return to its original raised position. The remote control is an infrared control so it will need to be pointed at the lift during use. Both handsets will be linked to the stairlift so they will not operate any other equipment.
- When there are more installations it's possible to change the IR canal.



22 Rail

The anodized aluminium rail is supplied self-color as standard. The rounded design minimizes the risk of injury from rail edges. It is the smallest rail on the market.

The rail is designed for a friction drive stairlift without a tooth rack and grease. Therefore, the rail is very clean.

This durable rail is easily maintainable and can be cleaned with a damp cloth.

The rail is cut to length by the installer or at the factory. The rail is secured on the stair tread by specifically designed feet that hold the rail just above the stairs.

Rail extension set
The standard rail is comprised of two x 2.35 m / 92.52” sections. In the event that a staircase is longer, the extension set will add a further 2.35 m / 92.52” to the track.

The Extension set includes 2.35 m / 92.52” rail, a coupling, two supports, and the required fixings.

Carpet spacer
A runner is carpeting that runs down the middle of the stairs leaving the edges of the tread exposed. Runners may be directly stapled or nailed to the stairs, or may be secured by a bar that holds the carpet in place where the tread meets the riser.

You may find the carpeting on each tread finishes at around the same point that the feet of stairlift track would fit to the stairs. This means that the feet must be positioned on an uneven surface so to address this Handicare offer custom spacers that can be used to compensate for the height of the runner and provide a level and stable mounting for the track feet.





23 | Applications

Handicare 1100 Style stairlifts are installed indoors, on stairs with rectangular steps. The rail rests about 25 mm / 0.98” above the front nose of the steps.

Left-hand or right-hand versions
The side on which the rail is mounted when viewed from the bottom looking up the stairs determines whether the model is a left-hand or a right-hand version.



Left



Right

24 Dimension sketch

		Style
A	Swivel radius	25.39 in
B	Minimum to seat back	2.36 in
C	Seat depth	15.35 in
D	Minimum folded width to footrest	12,6 in
E	Minimum open width to edge of footrest	20.87 in
F	Armrest width – external	22.64 in
G	Armrest width – internal	17.72 in
H	Seat back height	15.75 in
I	Footrest to seat height	16.93 - 18.11 - 19.29 - 20.47 in
J	Minimum footrest height	2.76 in
K	Front of track	6.30 in

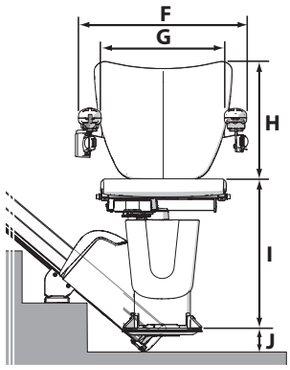

		1100 Slide Track
A	Swivel radius	26.38 in
B	Minimum to seat back	3.34 in
C	Seat depth	15.35 in
D	Minimum folded width to footrest	14,17 in
E	Minimum open width to edge of footrest	21.85 in
F	Armrest width – external	22.54 in
G	Armrest width – internal	17.72 in
H	Seat back height	15.75 in
I	Footrest to seat height	16.93 – 18.11 – 19.29 – 20.47 in
J	Minimum footrest height	3.74 in
K	Front of track	7.28 in

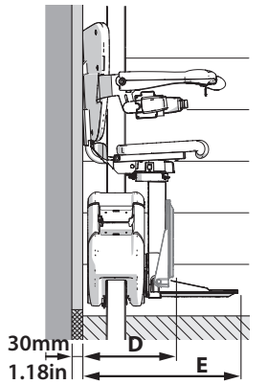

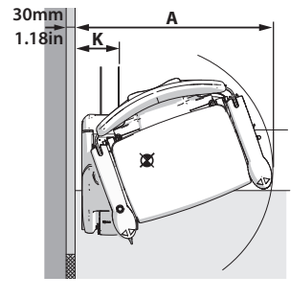

Short arm rest

The seat can be equipped with a shorter arm for use with narrow staircases. The swivel radius (A) will reduce to 625 mm / 24.61”.

This armrest is not part of the standard delivery but can be ordered via the webshop on www.handicarepartners.com

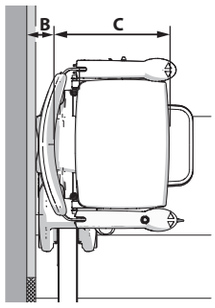

25 | Overhead clearance

To have enough clearance between the head of the end user and the bulkhead, you should measure the distance between the stringer and the bulkhead. This measurement shall not be less than the measurements from the table below.

Style

Angle	Footrest-seat 20.47 in	Footrest-seat 19.29 in	Footrest-seat 18.11 in	Footrest-seat 16.92 in
25	66.54 in	65.16 in	63.98 in	62.80 in
30	66.73 in	65.55 in	64.37 in	63.19 in
35	67.12 in	65.94 in	64.76 in	63.58 in
40	67.52 in	66.34 in	65.15 in	63.97 in
45	67.91 in	66.73 in	65.55 in	64.37 in
50	68.50 in	67.32 in	66.14 in	64.96 in

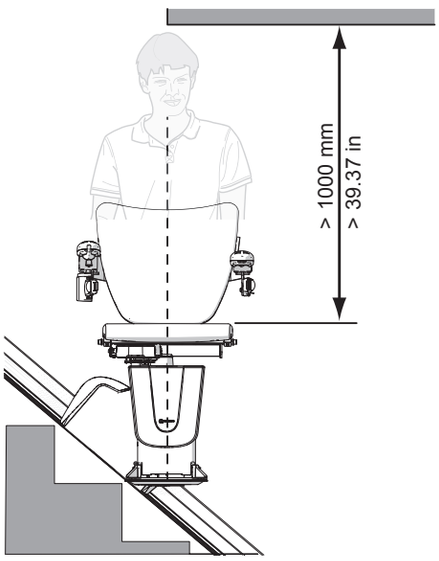

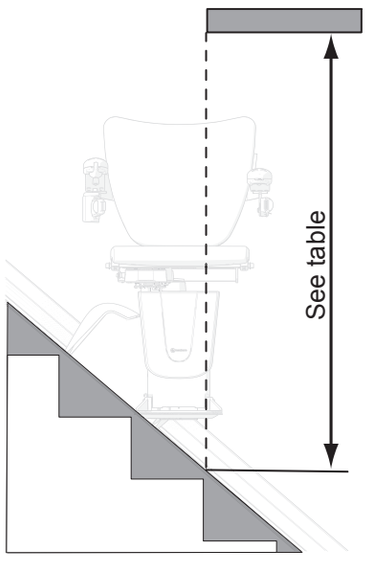

26 Rail intrusion into the staircase

The standard distance between the wall and the front of the rail is 170 mm / 6.69” if there is no stringer or the stinger is less than 10 mm / 0.39” above the stepnoses (see fig.1). The standard distance between the wall and the front of the Slide Track is 195 mm/7.68”

This distance is applicable to the closest object (see fig. 2)

If the stringer is more than 10 mm / 0.39” above the steps, the distance from the rail to the stringer will be 160 mm / 6.29” (see fig. 3)

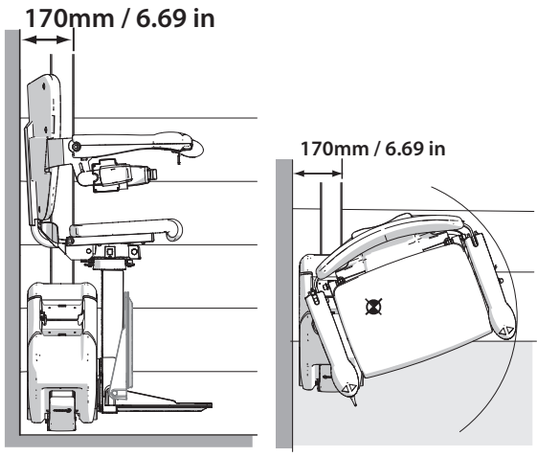

Fig. 1 No stringer or stringer (max. 60 mm / 2.36”) less than 10 mm / 0.39” above the step noses.

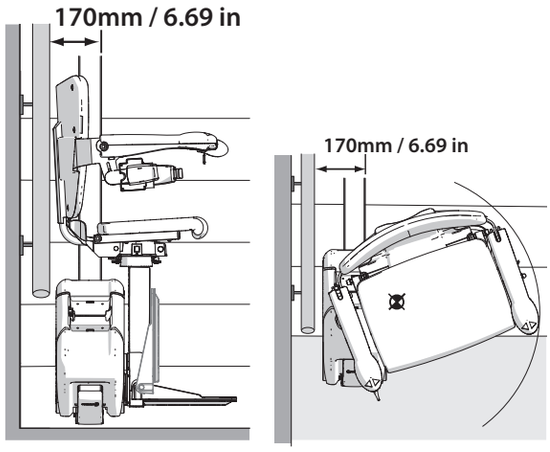

Fig. 2 Handrail remains.

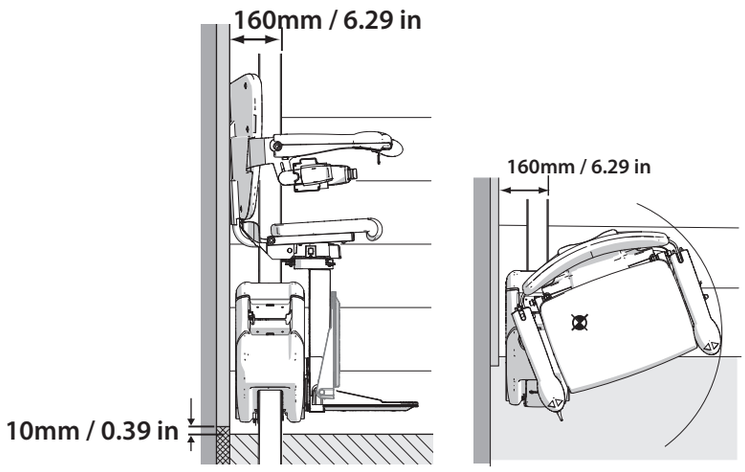

Fig. 3 Stringer more than 10 mm / 0.39” above the stepnoses.

27 | Rail intrusion at the bottom of the stairs

Hallway parking space
The Stairlift will need room to park at the base of the track. The exact space will be determined by the angle of the stairs. A minimum clearance of 120mm / 4.72” between the folded down armrest and any facing wall is required to prevent the risk of the hand becoming trapped between the armrest and the wall.

If not enough space is available at the bottom of the stairs an Easy hinge or Slide Track is available. More information regarding the Easy Hinge on page 31 and the Slide Track on page 27.

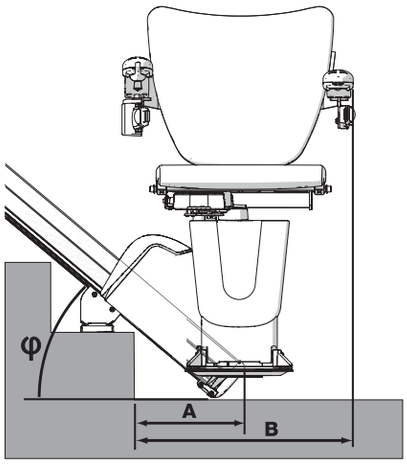

Angle	**Run out (A)** step height inch										
	6.30	6.50	6.70	6.89	7.09	7.28	7.48	7.68	7.87	8.07	8.27
25°	18.74	19.06	19.37	19.69	20.00	20.31	20.63	20.94	21.26	21.57	21.89
28°	17.32	17.64	17.95	18.27	18.58	18.90	19.21	19.53	19.84	20.16	20.47
30°	17.76	18.11	18.47	18.78	19.14	19.49	19.81	20.16	20.48	20.83	21.15
32°	16.93	17.25	17.56	17.88	18.19	18.51	18.82	19.14	19.45	19.77	20.08
34°	16.22	16.54	16.82	17.13	17.41	17.72	18.00	18.31	38.04	18.90	19.18
36°	15.59	15.87	16.15	16.42	16.70	16.97	17.25	17.48	17.76	18.04	18.31
38°	15.04	15.28	15.56	15.79	16.03	16.30	16.54	16.82	17.05	17.33	17.56
40°	14.53	14.77	15.00	15.24	15.48	15.71	15.95	16.19	16.42	16.66	16.89
42°	14.06	14.30	14.53	14.73	14.96	15.20	15.40	15.63	15.83	16.07	16.26
44°	13.67	13.86	14.06	14.26	14.45	14.65	14.89	15.08	15.28	15.48	15.71
46°	13.27	13.47	13.67	13.82	14.02	14.22	14.41	14.61	14.81	15.00	16.58
48°	12.92	13.11	13.27	13.47	13.63	13.82	13.98	14.18	14.33	14.53	14.46
50°	12.60	12.76	12.92	13.07	13.23	13.39	13.59	13.74	13.90	14.06	14.26

Angle	**Minimal distance till obstacle (B)** step height inch										
	6.30	6.50	6.70	6.89	7.09	7.28	7.48	7.68	7.87	8.07	8.27
25°	29.84	30.18	30.51	30.83	31.14	31.46	31.77	32.09	32.40	32.72	33.03
28°	28.54	28.88	29.21	29.57	29.88	30.24	30.55	30.91	31.22	31.57	31.89
30°	27.72	28.07	28.43	28.74	29.10	29.45	29.77	30.12	30.44	30.79	31.10
32°	26.93	27.25	27.56	27.88	28.19	28.51	28.82	29.14	29.45	29.77	30.08
34°	26.26	26.58	26.85	27.17	27.44	27.76	28.03	28.35	28.62	28.94	29.21
36°	25.67	25.95	26.22	26.50	26.77	27.05	27.32	27.56	27.84	28.11	28.39
38°	25.16	25.40	25.67	25.91	26.14	26.42	26.66	26.93	27.17	27.44	27.68
40°	24.69	24.92	25.16	25.40	25.63	25.87	26.10	26.34	26.58	26.81	27.05
42°	24.25	24.49	24.73	24.92	25.16	25.40	25.59	25.83	26.03	26.26	26.46
44°	23.90	24.10	24.29	24.49	24.69	24.88	25.12	25.32	25.51	25.71	25.95
46°	23.58	23.78	23.98	24.14	24.33	24.53	24.73	24.92	25.12	25.32	25.51
48°	23.31	23.51	23.66	23.86	24.02	24.21	24.37	24.57	24.73	24.92	25.08
50°	23.07	23.23	23.39	23.55	23.70	23.86	24.06	24.21	24.37	24.53	24.73

28 | Slide Track

Unlike the standard 1100 series track, which is fixed along the entire length of the stairway, the Slide Track is capable of moving in the direction of the stairway by means of an internal actuator. The movement, which is limited by design to less than 400mm / 15.75”, allows a shorter track to be fitted to the stairway. The Slide Track moves in conjunction with the powerpack to transport the user up and down the stairway. The shorter track is able to prevent the stairlift from causing an obstruction at the top or bottom of the stairway when not in use.

The 1100 Slide Track comprises a modified track profile and fitting kit which are used in conjunction with the standard Handicare 1100 series powerpack, front chassis and seat. The modified track accommodates the Slide Track mechanism. A separate unit mounted underneath the track provides the command and control signals for the Slide Track and is connected to the 1100 powerpack by means of a radio frequency (RF) link.

The Slide Track is non-handed and is fitted with continuous charge so that the powerpack batteries can be charged anywhere along the rail.

Use environment
The Slide Track should only be installed when the stairway has at least one enclosing wall and when the stairway does not have open risers. Where the staircase only has a wall on one side, the Slide Track must always be installed on the wall side of the staircase. The alternative option for a staircase with an open bannister is for the stair-side of the spindles to be covered in with Perspex or similar if it is not possible for the lift to be installed against the wall. The bottom step needs to be equal to the rest of the steps.

Operation
The Handicare 1100 Slide Track is fully automatic in operation and will function as follows:

• Going up the stairs
Push the operating toggle or the remote in the up direction. The stairlift will, after a short delay, move up the stairs. Both the stairlift and the Slide Track will move at the same time. The powerpack will display 8 - S - L throughout the journey.

• Going down the stairs
The lift operates as above, only in the other direction. The powerpack will display 9 - S - L throughout the journey.



Handicare 1100 Style

• Safety edges
Safety Edges are fitted to both ends of the Slide Track. If the Slide Track encounters an obstacle the rail will stop moving, but the lift can continue its ride so that you are able to remove the obstacle if safe to do so. Alternatively, the rail can be moved in the opposite direction using the toggle or remote to return the user to the start position so that assistance can be called to remove the obstacle.

• Parking
When the stairlift is not in use it can be parked using the remote control so that it does not cause an obstruction.

• Powered swivel seat
If the lift has reached the end of its travel at the top of the stairs and does not automatically swivel, the user should release the toggle and then press the toggle again to swivel the seat.

• Slide Track Emergency Manual Override
The Slide Track is also fitted with an emergency manual override positioned towards the bottom of the track. This allows a trained person to manually move the track using the supplied special spanner.

Capability
The Handicare 1100 Slide Track can be installed on stairways with a minimum angle of 37° and a maximum angle of 50°.
The slidetrack can be installed on stairs with an angle less that 37°. In that case the slidetrack will end slightly higher downstairs. Thefootrest – floor distance remains acceptable.

The actuator can be mounted in one of three positions, to suit the stair angle. Measuring the stairway angle allows the most appropriate configuration of the Slide Track Bottom rail to be ordered:

- 37° to 39°
- 40° to 47°
- 48° to 50° (not available in USA or Canada)

The maximum user weight is 120kg (19 stones) regardless of stairway angle.

Track length
• The minimum track length is 2.35m / 92.52”.
• The maximum track length is 7.05m / 277.56” (3x 2.35m / 92.52”).
Intermediate track lengths can be accommodated by cutting the Top Rail to the required length (min 100 mm). The 1100 Slide Track is intended to finish with the footplate vertically aligned with the top nose of the staircase. For measuring the staircase and determining the rail length consult chapter 30.





• Short staircases

On shorter rails the stairlift may reach the end of the track before the Slide Track reaches the end of its travel. In this situation keep the toggle or remote held in the direction of travel until all motion has ceased. The minimum track length for the Slide Track is 2.35m. The lower part of the Slide Track can not be cut and the upper part shall always be supported by at least two stanchions (3 steps).

Rail Intrusion Slide Track at the Bottom of the Stairs

The travel of the Slide Track in the downward direction is eventually limited by the downside track safety edge activating when it comes into contact with the floor. However, it is good practice to adjust the position of the bottom travel limit magnet so that this controls the stroke rather than the safety edge. Adjusting the magnet position so that the downside track safety edge just touches the floor without being activated will result in better product durability.

When installing a Slide Track because of limited space between the stairs and the front door it is essential to ensure that there is an alternative means of entering the building in case emergency access is required whilst the track is in the down position.

Angle	Typical rail intrusion (A)	Minimum distance to obstacle (B)
37	12.91 in	24.69 in
38	12.72 in	24.49 in
40	12.31 in	24.08 in
42	11.89 in	23.66 in
44	11.48 in	23.25 in
46	11.06 in	22.83 in
48	10.65 in	22.41 in
50	10.23 in	22.00 in

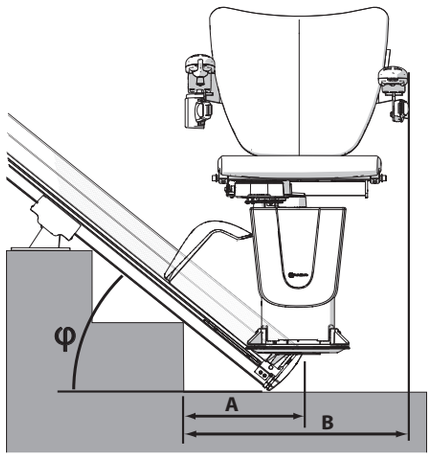

Note – Assumed height of first riser = 180 mm / 7.09”

The intrusion downstairs of the rail in the upper position is dependent on the step height and the angle and can be found in the table below:

Riser Angle	150	160	170	180	190	200	210	220
37°	145	131	118	105	91	78	65	52
40°	148	136	125	118	101	90	78	67
45°	155	145	135	125	115	105	95	85
50°	161	144	131	122	114	105	97	89

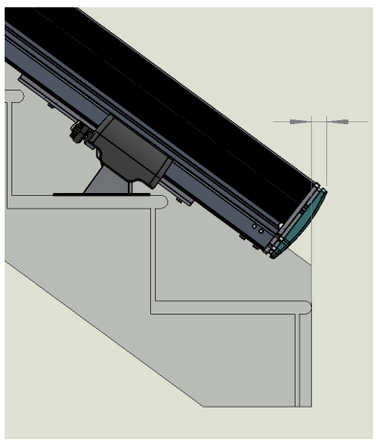

Rail Intrusion Slide Track at the Top of the Stairs
The 1100 Slide Track is intended to finish with the footplate vertically aligned to the top nose of the staircase. This is achieved by adjusting the position of the top limit actuator.

The chair will never extend beyond the end of the rail. The rail intrusion at the top of the stairs when the Slide Track is in the Top position varies according to the angle of the stairway as shown in the following tables.

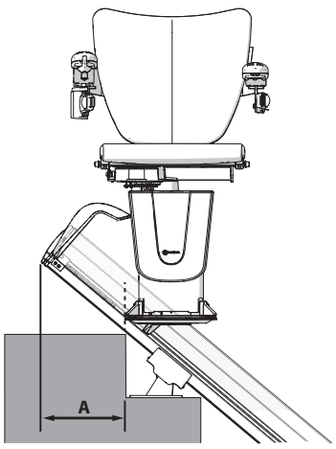

Angle	Rail only	Rail and Safety Edge (A)
37	8.03 inch	8.54 inch
38	7.64 inch	8.15 inch
40	9.65 inch	10.12 inch
42	8.35 inch	8.82 inch
44	7.83 inch	8.31 inch
46	7.40 inch	7.83 inch
48	8.07 inch	8.50 inch
50	7.40 inch	7.80 inch

After installation, if the powerpack travels beyond the position where the footplate is vertically aligned to the top nose of the staircase, the position of the top limit actuator can be adjusted to give the required finish position.

Typically, the Slide Track should be installed with the feet positioned as shown below when the Slide Track is in the top position:

- Fixed bottom foot – second step
- Second foot – one/two steps below the rail joint
- Third foot – one step above the rail joint
- Fourth foot – last step, minimum 0.4 m (15.75”) below the end of the rail



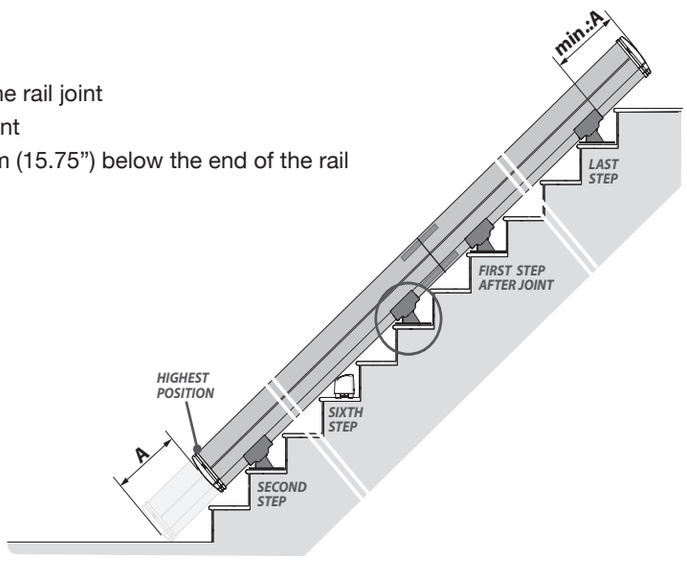

29 Easy hinge

If there is a doorway close to the bottom of the stairs that would be obstructed by a standard rail an easy hinge may be fitted. This means that the track can be folded away manually from the doorway giving clear access. When installing an easy hinge because of limited space between the stairs and the front door you should always ensure there is a secondary access in case emergency access is required when the track is in the down position.

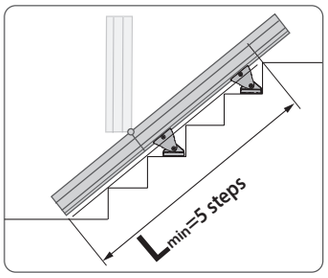

The easy hinge is the only hinge that has continuous charge on the hinge part.
The easy hinge cannot be used in combination with zero intrusion.
The easy hinge is applicable for 140 kg (25° - 45°) or 130 kg (45° - 50°).

The minumum raillength for a Handicare 1100 is 5 steps excluding platform (floor), on which you can install 2 supports as a minimum. One step remains free between the stanchions.

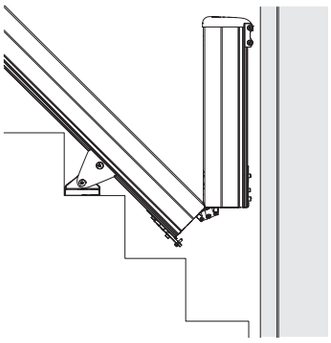

Dimensions
The length of the easy hinge is standard 650 mm / 25.59” and can be used on a rail of 4,7 / 185.04” or 7 mtr / 275.59”.
The distance from the rail to the wall is the same as for a standard lift.

When the rail is folded up, it does not protrude from the first step.

Pinch protection
The lift has a pinch protection, which is fixed on the powerpack. This stick prevents the user from getting his fingers trapped between the folded hinge and the seat.



In case the user rides the lift when the folded hinge is in the upward position, the stick will hit the folding hinge and stop the lift. Its possible to return to the top floor, by operating the joystick in the upwards direction.

Operating the hinge
The Easy Hinge features a mechanism that helps folding the rail up. Simply tip the bottom of the rail up with your foot (or cane) and it comes up by itself. To close, simply push the rail down again by hand.





30 | Rail intrusion at the top of the stairs

The Handicare 1100 Style can be installed in two ways. Flush footrest landing or footrest landing above the floor.

Flush footrest landing
The track extension top is 250 mm / 9.84” (max.). This dimension will mean that the footrest will be flush with the floor when the stairlift reaches the end of the rail. The chair will never go further than the rail.

Footrest landing above floor
The track extension top is 330 mm / 12.99”. This dimension will mean that the footrest will be level above the floor when the stairlift reaches the end of the rail. The chair will never go further than the rail.

Flush footrest landing

Angle	Run out (A)
25°	184 mm
30°	173 mm
35°	161 mm
40°	148 mm
45°	134 mm
50°	119 mm

Footrest landing above floor

Angle	Run out (B)
25°	255 mm
30°	242 mm
35°	227 mm
40°	210 mm
45°	191 mm
50°	171 mm

Flush footrest landing

Angle	Run out (A)
25°	7.24 in
30°	6.81 in
35°	6.34 in
40°	5.82 in
45°	5.27 in
50°	4.68 in

Footrest landing above floor

Angle	Run out (B)
25°	10.04 in
30°	9.53 in
35°	8.93 in
40°	8.27 in
45°	7.52 in
50°	6.73 in

For more detailed rail cutting see page 36.

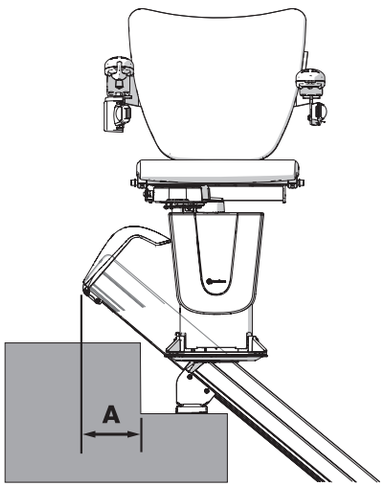

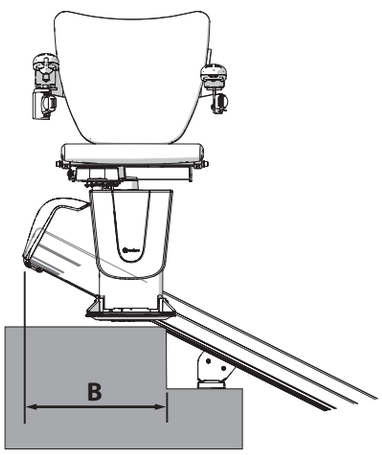

31 Zero intrusion

Zero intrusion is a Handicare 1100 with no rail overrun on the top of the stairs.
Zero intrusion is achieved by fitting special rail support extensions that bring the rail off the stairs in horizontal direction and a front chassis plate which brings the footrest back towards the top nose.
The zero intrusion can only go up to 25˚ - 45˚.
The zero intrusion cannot be used in combination with easy hinge and Slide Track.
The rated load for a lift with zero intrusion is 140 kg.
The lowest (430 mm / 16.93”) “footrest-seat height” is not possible with a staircase angle between 40° and 45°.
The bulkhead clearance is the same as for a standard Handicare 1100.

Rail length
The rail cut length calculation remains the same as for a standard rail.
For measuring the staircase and determining the rail length consult page 35.

Top floor intrusion
At the top only footrest flush landing is possible.

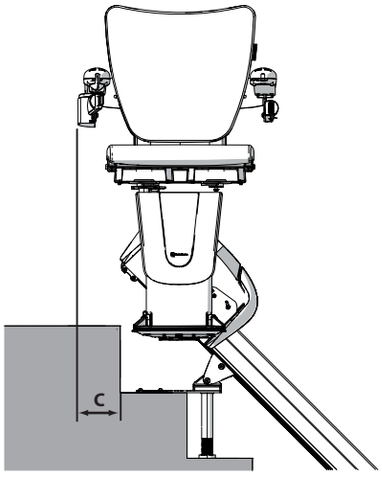

Bottom floor intrusion
The bottom parking space required increases dependent upon the staircase angle, see table below.

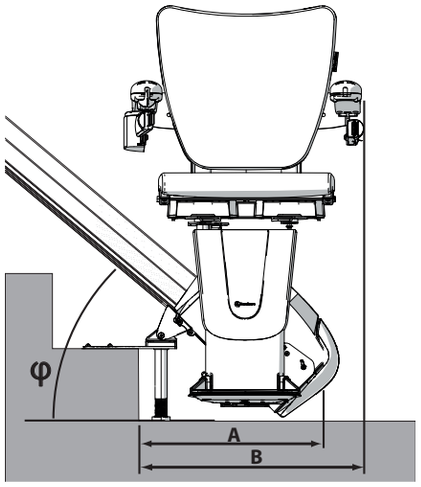

	Run out (A) step height inch					
Angle	6.30	6.69	7.09	7.48	7.87	8.27
25°	27.13	27.83	28.50	29.17	29.84	30.51
28°	25.59	26.30	26.97	27.64	28.31	28.98
30°	24.57	25.28	25.95	26.62	27.29	27.95
32°	23.55	24.18	24.81	25.44	26.07	26.69
34°	22.64	23.23	23.82	24.41	25.00	25.59
36°	21.85	22.40	22.95	23.51	24.02	24.57
38°	21.10	21.62	22.09	22.60	23.11	23.62
40°	20.36	20.83	21.30	21.77	22.25	22.72
42°	19.69	20.16	20.59	21.03	21.46	21.89
44°	19.06	19.45	19.84	20.28	20.67	21.10
45°	18.74	19.14	19.49	19.92	20.32	20.71

	Minimal distance till obstacle (B) step height inch					
Angle	6.30	6.69	7.09	7.48	7.87	8.27
25°	31.85	32.56	33.23	33.90	34.57	35.24
28°	30.31	31.02	31.69	32.36	33.03	33.70
30°	29.21	29.92	30.59	31.26	31.93	32.60
32°	28.23	28.86	29.49	30.12	30.75	31.38
34°	27.36	27.95	28.55	29.14	29.73	30.32
36°	26.62	27.17	27.72	28.27	28.78	29.33
38°	21.97	26.42	26.89	27.40	27.92	28.43
40°	25.20	25.67	26.14	26.62	27.09	27.56
42°	24.57	25.04	25.47	25.91	26.34	26.77
44°	23.98	24.37	24.77	25.20	25.59	26.03
45°	23.74	24.14	24.53	24.92	25.32	25.75

	(C)
Angle	
25°	2.91
28°	3.23
30°	3.43
32°	3.58
34°	3.78
36°	3.98
38°	4.21
40°	4.41
42°	4.65
44°	4.88
45°	4.92

32 | Stairs with off-set steps



The Handicare 1100 is our ultimate solution for straight staircases. However, in some cases stairs are not completely straight because some steps might be off-set at the bottom, there might be a long tread, or the stairs are concave shaped.

In these situations, the rail does not follow the nosing's of the steps. Therefore, the standard supports might be too short, although there is a degree of adjustability.

The solution for the Handicare 1100, is to use Kit AA27275.
There is a limit to how these support plates can be used.
Below you will find a guideline how to check if the support plates do fit.

Make a straight line from the nose of the last step to the step that sticks out (30 mm/1.18" away from the skirting). Measure the distance from where the line hits the step to the nose of this step. We call this the offset. As a rule of thumb the offset shall not be more than 340 mm / 13.39".

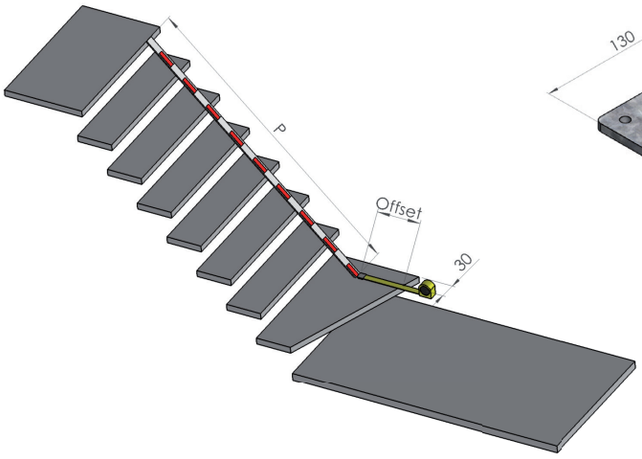

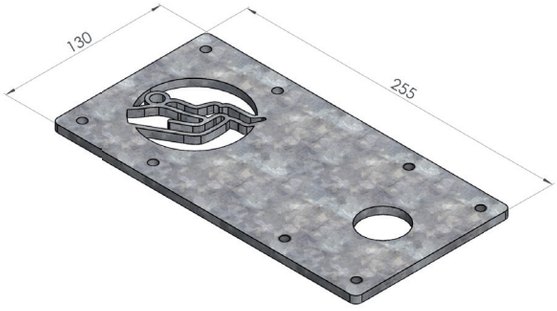

This example only covers the case of one step sticking out, but you could also use it if two or maybe three steps sticking out.

For the distribution of the supports, it will help to have the longest railpart at the bottom.

33 Measuring the stairs

To determine the length of the rail, you measure:

- the length of the stairs from the ground floor to the nose of the last step (L).
- the length from the ground floor to the nose of the first step (S)

Diagonal measurements of the stairs:

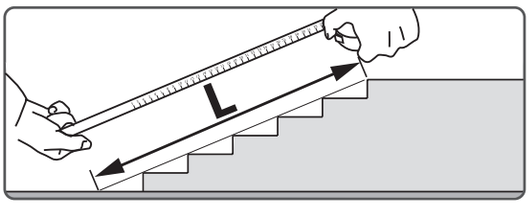

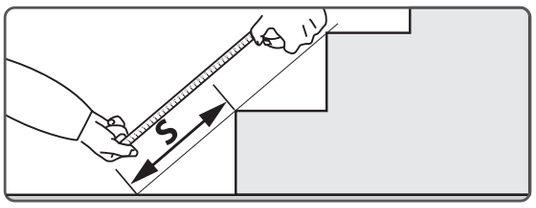

Length of rail flush landing
The rail length for a lift with
flush landing is L + 250 mm / 9.84”

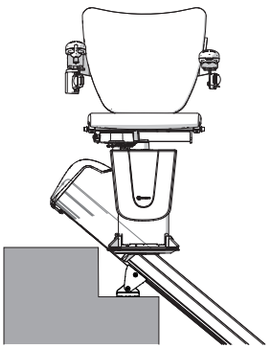

Length of rail with extra overrun at the top
The rail length for a lift with
an overrun at the top is L + 330 mm / 12.99”

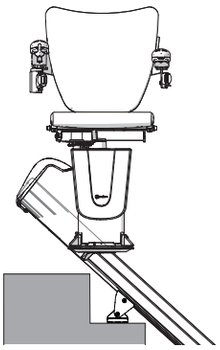

Length of rail for a Slide Track
The rail length for a lift with
a Slide Track is L - S + 300 mm / 11.81”

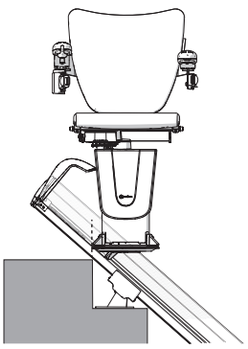

Length of rail for a Zero intrusion
The rail length for a lift with
zero intrusion is L + 250 mm / 9.84”

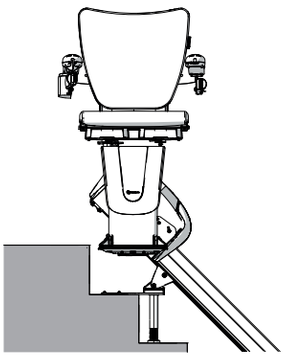

For exceptions and the exact rail cutting dimensions consult the installation manual.

34 Rail cutting

The needed number of rail parts, which part to cut and the minimum rail length for each part can be found in below table.

Amount & length rail parts

H1100 standard							
Rail length	**Number of rail parts**	**Cut lower rail part**	**Cut middle rail part**	**Cut top rail part**	**Min length lower rail part**	**Min length middle rail part**	**Min length top rail part**
0 - 1000	-	-	-	-	-	-	-
1000 - 2350	1	√	-	-	1000	-	-
2350 - 3350	2	√	-	√	1000	-	1000
3350 - 4700	2	√	-	X	1000	-	2350
4700 - 7005	3	√	X	√	1000	2350	1000

H1100 easy hinge							
Rail length	**Number of rail parts**	**Cut lower rail part**	**Cut middle rail part**	**Cut top rail part**	**Min length lower rail part**	**Min length middle rail part**	**Min length top rail part**
0 - 1500	-	-	-	-	-	-	-
1500 - 2350	1	√	-	-	1500	-	-
2350 - 2500	2	√	-	√	2350	-	850
2500 - 3350	2	√	-	√	2350	-	1000
3350 - 4700	2	X	-	√	2350	-	1000
4700 - 5700	3	X	√	√	2350	2350	1000
5700 - 7005	3	X	X	√	2350	2350	1000

H1100 slidetrack							
Rail length	**Number of rail parts**	**Cut lower rail part**	**Cut middle rail part**	**Cut top rail part**	**Min length lower rail part**	**Min length middle rail part**	**Min length top rail part**
0 - 2350	-	-	-	-	-	-	-
2350 *	1	X	-	-	2350	-	-
2350 - 2450 **	2	X	-	√	2350	-	150
2450 - 4700	2	X	-	√	2350	-	150
4700 - 4800 ***	3	X	X	√	2350	2350	150
4800 - 7005	3	X	X	√	2350	2350	150

* Not necessary to cut the rail, single rail kit should be included

** Advise to deliver a rail of 2450

*** Not allowed to cut the middle railpart, advise deliver rail of 4800

35 | Certificate

intertek
Total Quality. Assured.

AUTHORIZATION TO MARK

This authorizes the application of the Certification Mark(s) shown below to the models described in the Product(s) Covered section when made in accordance with the conditions set forth in the Certification Agreement and Listing Report. This authorization also applies to multiple listee model(s) identified on the correlation page of the Listing Report.

This document is the property of Intertek Testing Services and is not transferable. The certification mark(s) may be applied only at the location of the Party Authorized To Apply Mark.

Applicant:	Handicare Stairlifts B.V.	**Manufacturer:**	Handicare Stairlifts B.V.
Address:	Newtonstraat 35 1704 SB Heerhugowaard	**Address:**	Newtonstraat 35 1704 SB Heerhugowaard
Country:	The Netherlands	**Country:**	The Netherlands
Contact:	Martijn de Vries Tim Rodenburg	**Contact:**	Martijn de Vries Tim Rodenburg
Phone:	+31 (0)72 576 88 88	**Phone:**	+31 (0)72 576 88 88
FAX:	N/A	**FAX:**	N/A
Email:	martijn.devries@handicare.com tim.rodenburg@handicare.com	**Email:**	martijn.devries@handicare.com tim.rodenburg@handicare.com

Party Authorized To Apply Mark: Same as Manufacturer
Report Issuing Office: Arlington Heights, IL

Control Number: 5015845 **Authorized by:** for L. Matthew Snyder, Certification Manager

C ETL US LISTED Intertek

This document supersedes all previous Authorizations to Mark for the noted Report Number.

This Authorization to Mark is for the exclusive use of Intertek's Client and is provided pursuant to the Certification agreement between Intertek and its Client. Intertek's responsibility and liability are limited to the terms and conditions of the agreement. Intertek assumes no liability to any party, other than to the Client in accordance with the agreement, for any loss, expense or damage occasioned by the use of this Authorization to Mark. Only the Client is authorized to permit copying or distribution of this Authorization to Mark and then only in its entirety. Use of Intertek's Certification mark is restricted to the conditions laid out in the agreement and in this Authorization to Mark. Any further use of the Intertek name for the sale or advertisement of the tested material, product or service must first be approved in writing by Intertek. Initial Factory Assessments and Follow up Services are for the purpose of assuring appropriate usage of the Certification mark in accordance with the agreement, they are not for the purposes of production quality control and do not relieve the Client of their obligations in this respect.

Intertek Testing Services NA Inc.
545 East Algonquin Road, Arlington Heights, IL 60005
Telephone 800-345-3851 or 847-439-5667 Fax 312-283-1672

Standard(s):	Safety Standard for Platform Lifts and Stairway Chairlifts [ASME A18.1:2017 Ed.7] Elevator and Escalator Electrical Equipment [ASME A17.5:2019 Ed.6] Elevator and Escalator Electrical Equipment [CSA B44.1:2019 Ed.6] Platform Lifts And Stair Lifts For Barrier-Free Access [CSA B355:2019 Ed.7]
Product:	Stairway Chairlift
Brand Name:	handicare
Models:	1100

ATM for Report 103987932CHI-001

ATM Issued: 2-Sep-2020
ED 16.3.15 (20-Apr-17) Mandatory

Compliance

The Handicare 1100 has been designed to meet the following requirements:

- Machinery Directive 2006/42/EC
- Low Voltage Directive 2014/35/EU
- EMC Directive 2014/30/EU
- EN ISO 60601-1-2
- EN81-40:2008
- ASME A18.1-2017
- ASME A17.5-2019/CSA B44.1:2019
- CSA B355:2019

Formal certification to EN81-40:2008 has been undertaken by Liftinstituut B.V., certificate NL17-400-1001-015-10, REV 6.

Formal certification to ASME A18.1-2017, ASME A17.5-2019/CSA B44.1:2019 and CSA B355:2019 has been undertaken by Intertek.

Handicare 1100 Style

Handicare Stairlifts B.V.
Newtonstraat 35
1704 SB Heerhugowaard
The Netherlands
T +31 (0)72 576 88 88
stairlifts@handicare.com
www.handicare.com

Handicare Accessibility Ltd.
82 First Avenue, Pensnett Estate
Kingswinford, West Midlands
DY6 7FJ, England
T +44 (0)1384 408700
enquiries@handicare.co.uk

Handicare Monte-escaliers
4 Rue des Piverts
ZAC de l' Aunaie
91610 Ballancourt-sur-Essonne
France
T +33 (0)1 69 46 86 10
monte-escaliers@handicare.fr

Handicare Accessibility GmbH
Lübbecker Strasse 240
32429 Minden
Deutschland
T +49 (0)571 973 98-44
technik.handicare@handicare.com

Handicare Montascale
Via Chiaviche 17
46020 Pegognaga (MN)
Italy
T +39 (0)376 143 3516
www.handicare-montascale.it

Handicare USA, Inc.
10888 Metro Court
St. Louis, MO 63043
United States of America
Toll Free: 1.866.891.6502
Local: 314.692.9135
sales.us@handicare.com

Handicare Canada
81 Romina Drive,
Concord, ON L4K 4Z9
Canada
T 905.850.9003

Date	Version	Change
05-01-26	23	Pag. 29 - Riser angle 40°