HANDICARE 4000 | SALESMANUAL

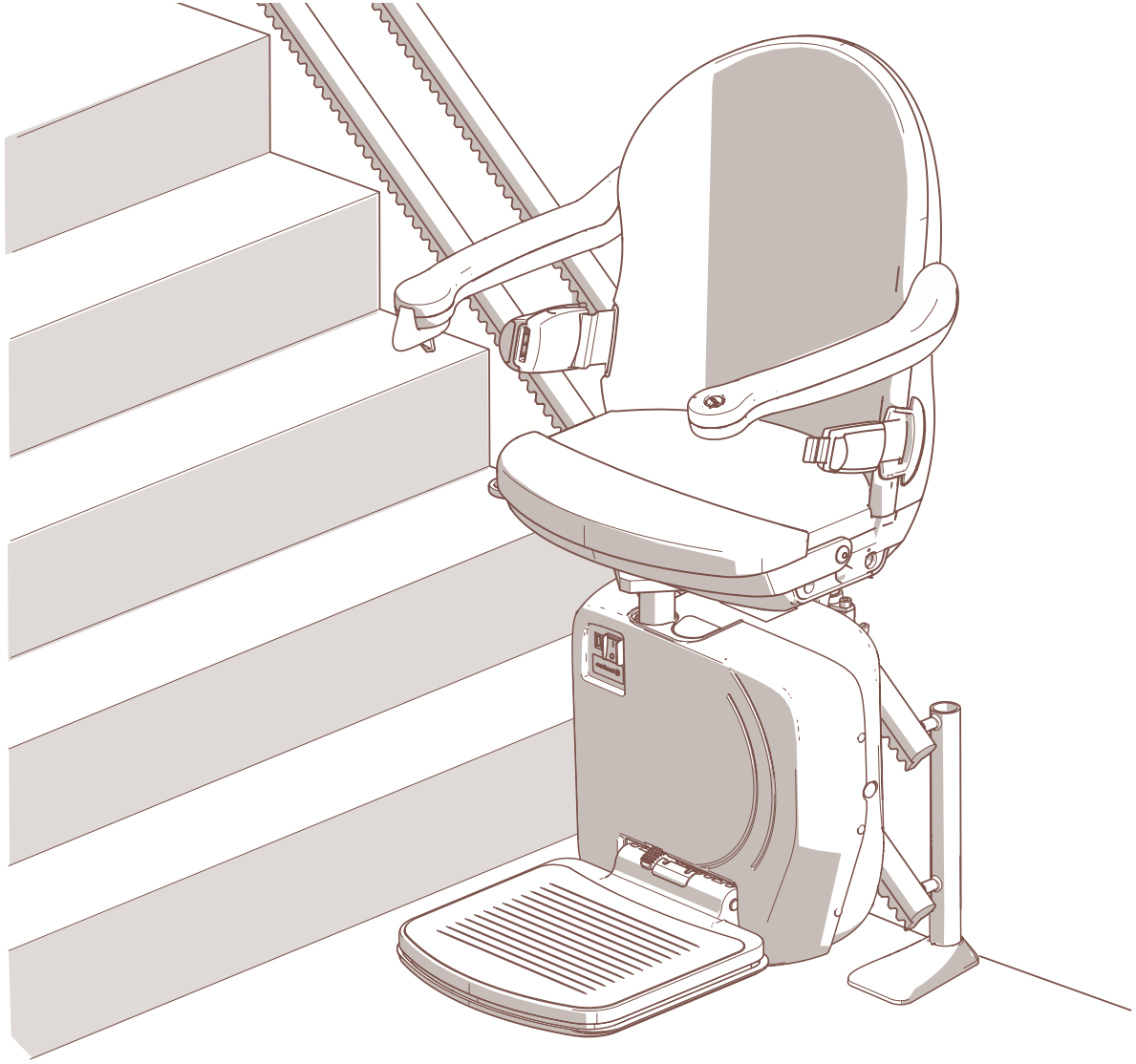

handicare by Savaria®

CONTENTS

Page 5 - 11

Seat types

Page 12 - 14

Lift types

Page 15 - 37

Lift parts

Page 37 - 38
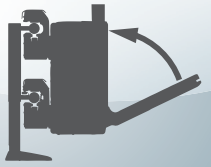
Options

Page 39

Optional extras

Page 40 - 44
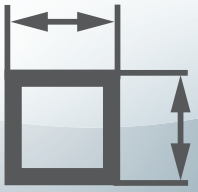
Dimensions

Page 45 - 47

Stair types

Page 48 - 52

Stair width

Page 53 - 55

Turning space

Page 56 - 57
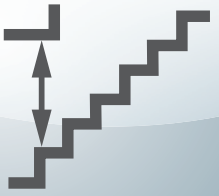
Bulkhead

Page 58 - 66

Downstairs

Page 68 - 77

Upstairs

Page 78 - 81

Attachments

Page 82 - 83

Tools

Page 84 - 85

Certificate

GENERAL

3D-VIEW

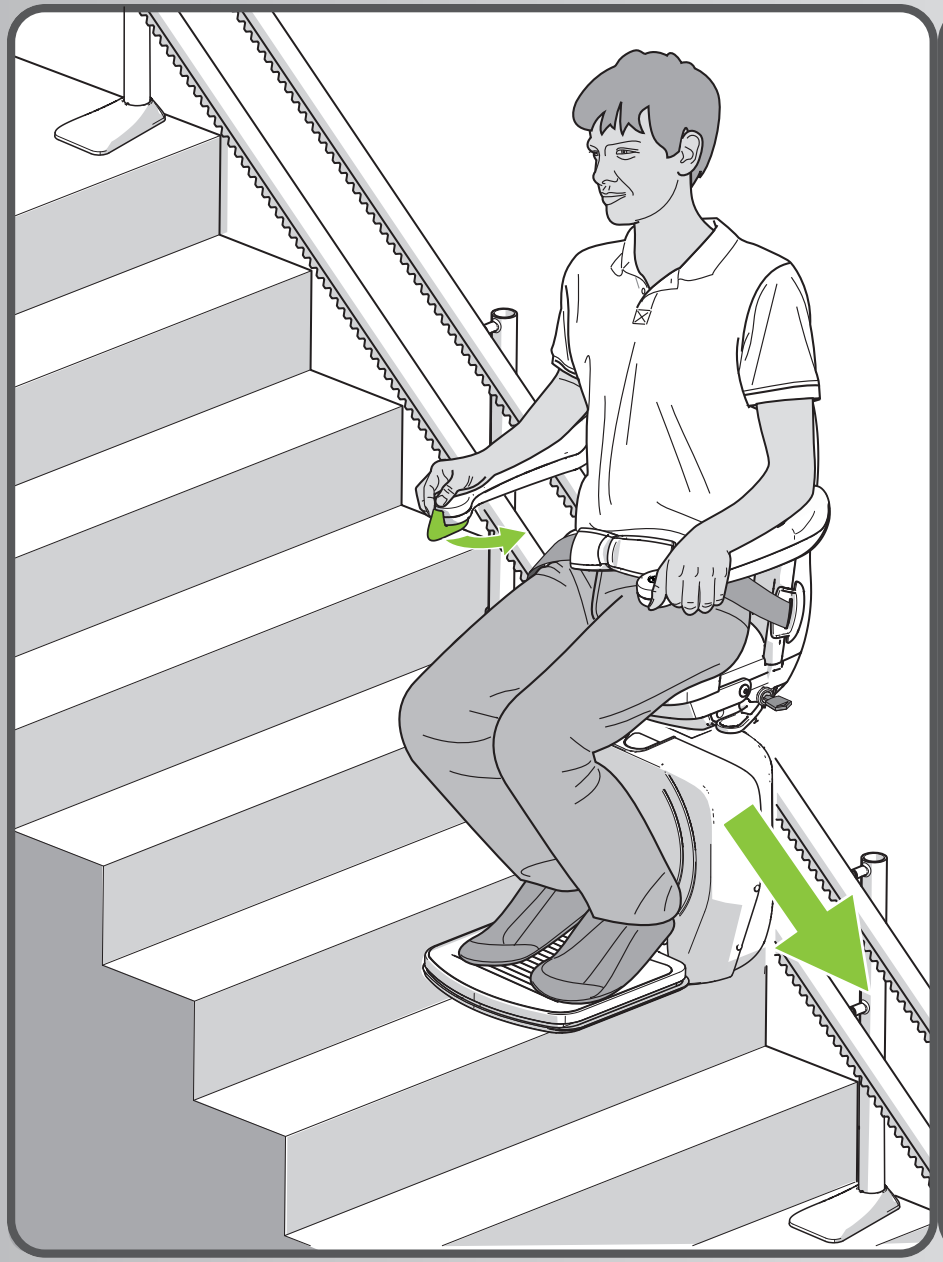

Charging power supply

Input voltage	100-240 VAC
Frequency	50/60 Hz
Charging current	1 Amp
Output voltage	33VDC

Power Pack

Power consumption heavy duty lift	400 watts
Max weight heavy duty lift	350 lbs
Max speed	0.39 ft/sec
Trips without recharging	10
Max angle of inclination	56°

Maximum* rail length 49 ft, in case inclination 46°-56°	300 lbs
Maximum* rail length 49 ft, in case inclination 0°-45° for Heavy duty use	350 lbs

*for applications where 10 starts per one hour are required
*39 ft trip at an angle of inclination 56°

INTENDED USER

1. Persons (exclusively) whose mobility has been reduced to such an extent that they are not able to move between floors along the stairs.
2. Users must be able to reach a safe location via the stairs in an emergency or, If they can't, they have enough help to do so.
3. The height of the chair must be tailored to the user's body size so that the feet are on or above the footrest when the user is seated.
4. Users must be able to either see or hear or if not receive assistance in the use of the stair lift.
5. Users must have sufficient strength and mental capacity to independently operate the controls and seat belt of the stair lift or with the assistance of a carer be able to remain in a stable position through the lift's travel.
6. Users must have sufficient strength and mental capacity to independently understand and perform the safety instructions as written in the user manual or receive assistance in the use of the stair lift.
7. Users younger than 12 years and smaller than 1.35 m shall not be allowed to independently use the stair lift.
8. Users may not weigh more than the indicated maximum load of the stairlift.
9. The stairlift may only be used by one person at a time

Stairlift suitable for the transport of one person.

home

handicare by Savaria®



Seat types

SMART

FRONT VIEW



The Smart chair can be delivered in 4 colours.

The upholstery is leatherlook and easy replaceable.

The distance from the seat to the footrest is adjustable. For exact dimensions consult the dimension sketch on page 40.

The armrest, footrest and seat fold up separately.

The chair turns eccentric in the direction of the top stairs which enables the user to get closer to the landing to get on and off the seat more safely.

It is not possible to ride in a swivelled position.

The footrest does not swivel with the seat.

Powered swivel seat is optional.
The powered footrest (powered from the arm) is optional.

Standard, small and offset footrest.

The seat can be fitted with an extended seat base which increases the seat depth from 14,17 to 16,73 inch.

The width of the armrests is adjustable with spacers. For exact dimensions consult the dimension sketch on page 41.

SIMPLICITY

FRONT VIEW



The Simplicity chair can be delivered in 1 colour.

The upholstery is Vinyl, colour sand.

The armrest, footrest and seat fold up separately.

The chair turns eccentric in the direction of the top stairs which enables the user to get closer to the landing to get on and off the seat more safely

It is not possible to ride in a swivelled position.

The footrest does not swivel with the seat.

No powered swivel seat as an option.

The powered footrest is optional (powered from armrest).

Standard, small and offset footrest.

The distance from the seat to the footrest is adjustable. For exact dimensions consult the dimension sketch on page 42.

STYLE

FRONT VIEW



The upholstery is available in 3 colours:

- Vinyl (beige)

The distance from the seat to the footrest is adjustable. For exact dimensions consult the dimension sketch on page 42.

The armrest, footrest and seat fold up separately.

The chair turns eccentric in the direction of the top stairs which enables the user to get closer to the landing to get on and off the seat more safely.

It is not possible to ride in a swivelled position.

The footrest does not swivel with the seat.

The powered footrest is optional, powered from armrest.

Standard, small and offset footrest.

SMART PERCH

FRONT VIEW



For clients with poor knee flexion or hip problems.

Also good for narrow staircases.

Not with powered hinge.

Not with powered swivel / manual swivel.

With large footplate only.

A powered footrest only by switch under the armrest. The 4000 is advised to have an overrun at the top. Rated load: 299.8 lbs.

Not outdoor.

The distance from the seat to the footrest is adjustable. For exact dimensions consult the dimension sketch on page 44.

Safety barriers can be recommended on the downside of the stairs.

Customers standing height +14,76 inch must be less than bulkhead height.

CHILD SEAT

FRONT VIEW



4 sizes.

The 4000 can be fitted with an R82 Adapter Plate which allows a child seat to be fitted.

Handicare supply the adapter but the seat must be ordered from the manufacturer in the required size.

Can swivel at the top of the stairs.

No toggle: operation by remote control only.

Adjustable footrest (height, angle).

The lift is delivered with the standard footrest. Headsupports in different shapes and sizes.

Choice of seatbelts.

For more information: www.r82.co.uk

OUTDOOR

FRONT VIEW



The differences between the IP44 version of the Handicare 4000 and the standard model are as follows:

- Painted plastic covers on powerpack for improved UV resistance
- Zinc plated rail (rail and gear rack) with painted stanchions
- Conformal coating applied to the main controller (HAN125).
- Grey slate coloured upholstery.
- Rubber footplate mat.
- IP 44 rated storage cover for seat and powerpack.
- The high voltage part of the power supply shall be installed indoors.

No hinge.

No perch seat.

No powered swivel or powered footplate options.



Lift types

4000

3D-VIEW

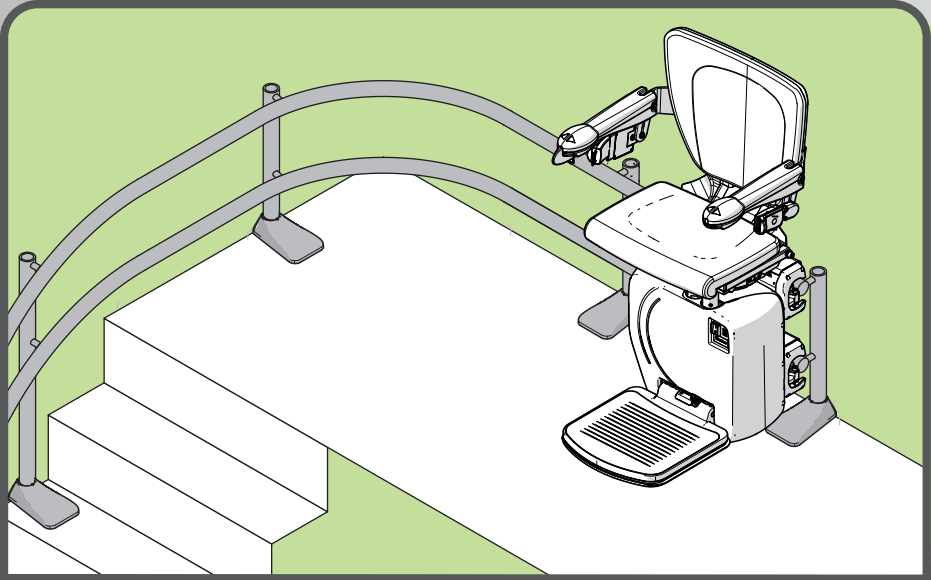

OUTER SIDE

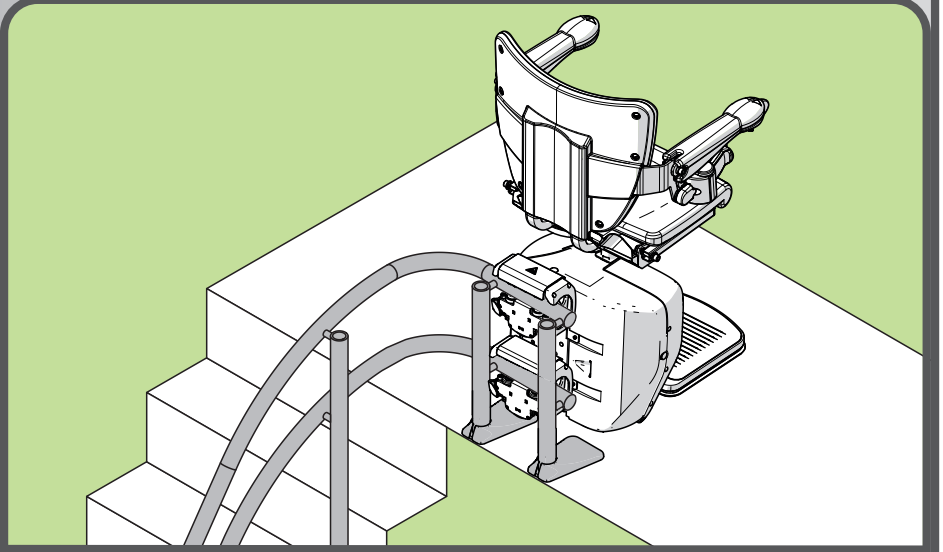

INNER SIDE

Secure twin rail system (1,5 inch).

Toothrack on both rails.

Tightest inside curve in the market.

The rail of the Handicare 4000 stairlift is mounted on the outer side or the inner side of the stairs.

If 10 starts an hour are required.
Longer rails are possible when the lift is used in a lower frequency.

Both internal and external bends can be incorporated in a single length of the Handicare 4000 rail.

LEFT/RIGHT HANDED

3D-VIEW

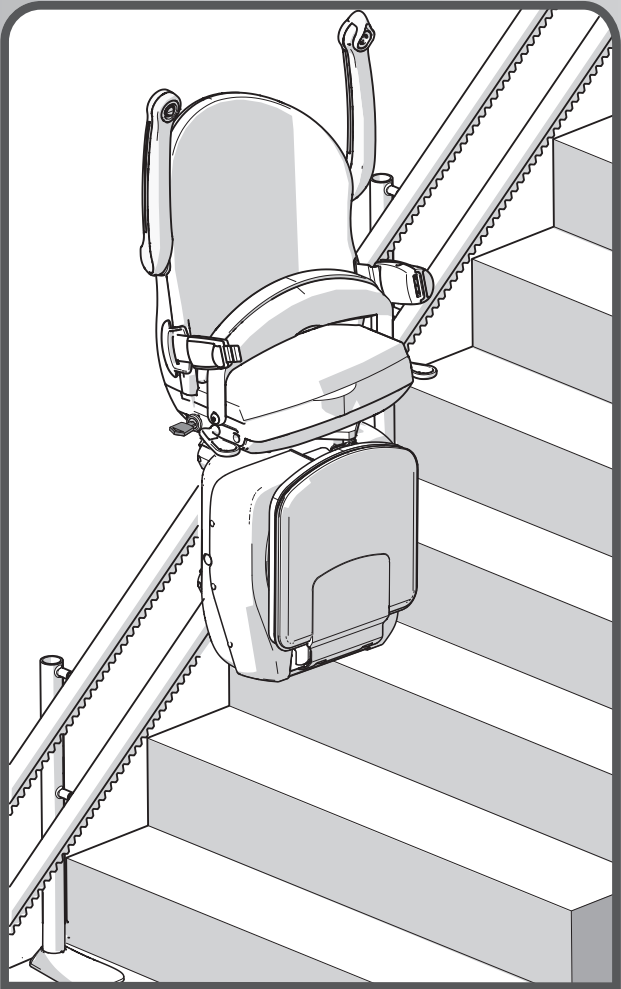

LEFT HANDED

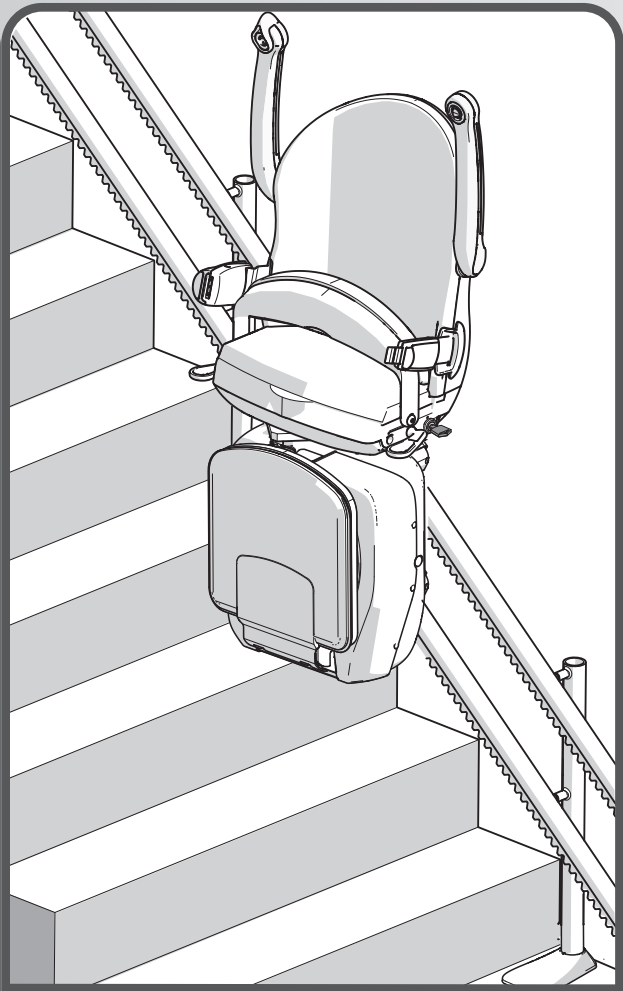

RIGHT HANDED

The side on which the rail is mounted when viewed from the bottom of and facing the stairs determines whether the model is a left-hand or a right-hand version.

The position of the toggle is stated when sitting on the chair.

No installation within 10 miles / 16 kilometer of the saltwater environment.

Lift parts

THE UNIT

3D-VIEW

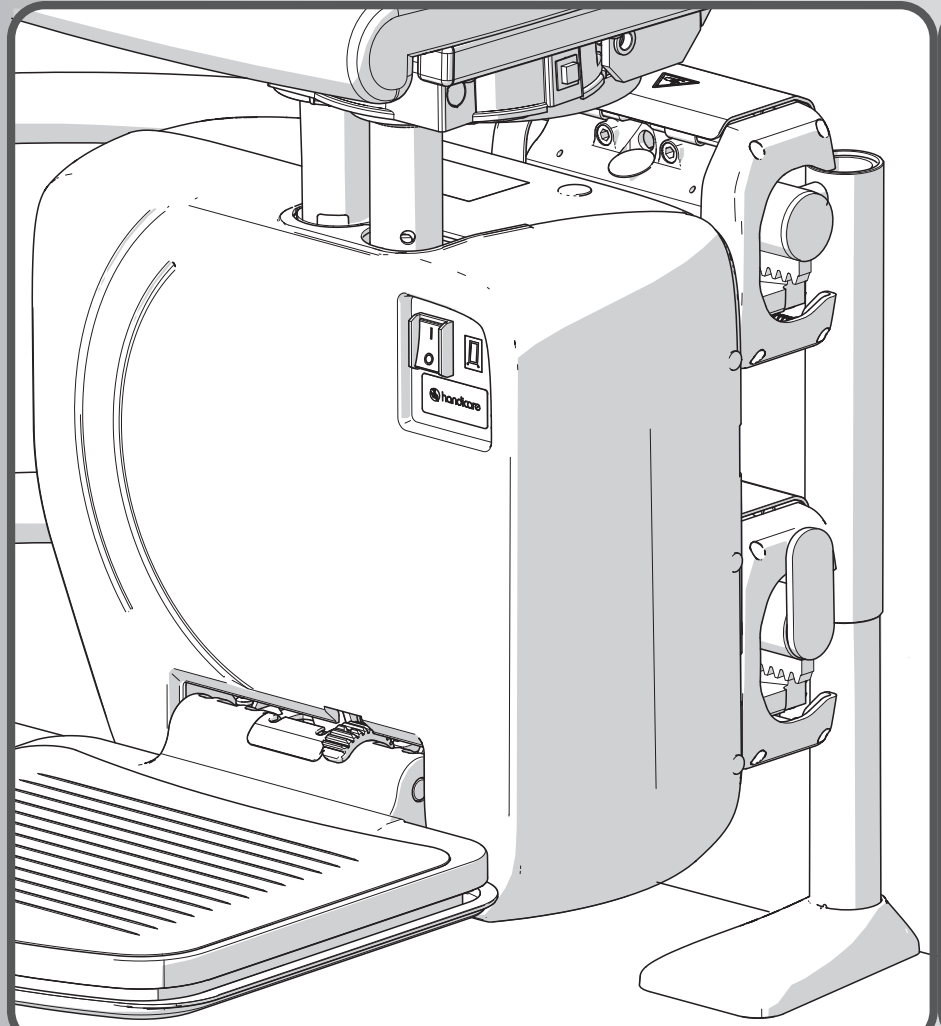

There is on only one trunnion.

Ignoring all of the options such as different RF frequencies, footplate types, etc… there are 4 different powerpacks

LH/RH Hinge Powerpack
LH/RH Outdoor Powerpack
LH/RH Heavy Duty Powerpack

A lift with a powerpack suitable for hinge can be used in combination with internal curves.

Outdoor powerpack has the UV painted plastic covers and coated HAN125.

Heavy duty powerpack has a larger motor gearbox, and different seat stem brackets.

The powerpack has as standard an overspeed governor that activates the safety brake in case of overspeed.

The safety brake will stop the lift mechanically.

The powerpack and the trunnions are standard provided with sensitive edges, that when meeting an obstruction stops the lift.
You can move the lift in the opposite direction to remove the obstacle.

PARTS

UNIT
BATTERIES
FOOTREST
SAFETYBELT
ARMREST
SWIVEL
CONTROL
USER INTERFACE
KEY SWITCH
ON/OFF-SWITCH
EMERGENCY STOP
ONE TOUCH ALERT
REMOTES
POWER SUPPLY
RAIL
CHARGING POINTS
THE HINGED RAIL

THE BATTERIES

3D-VIEW

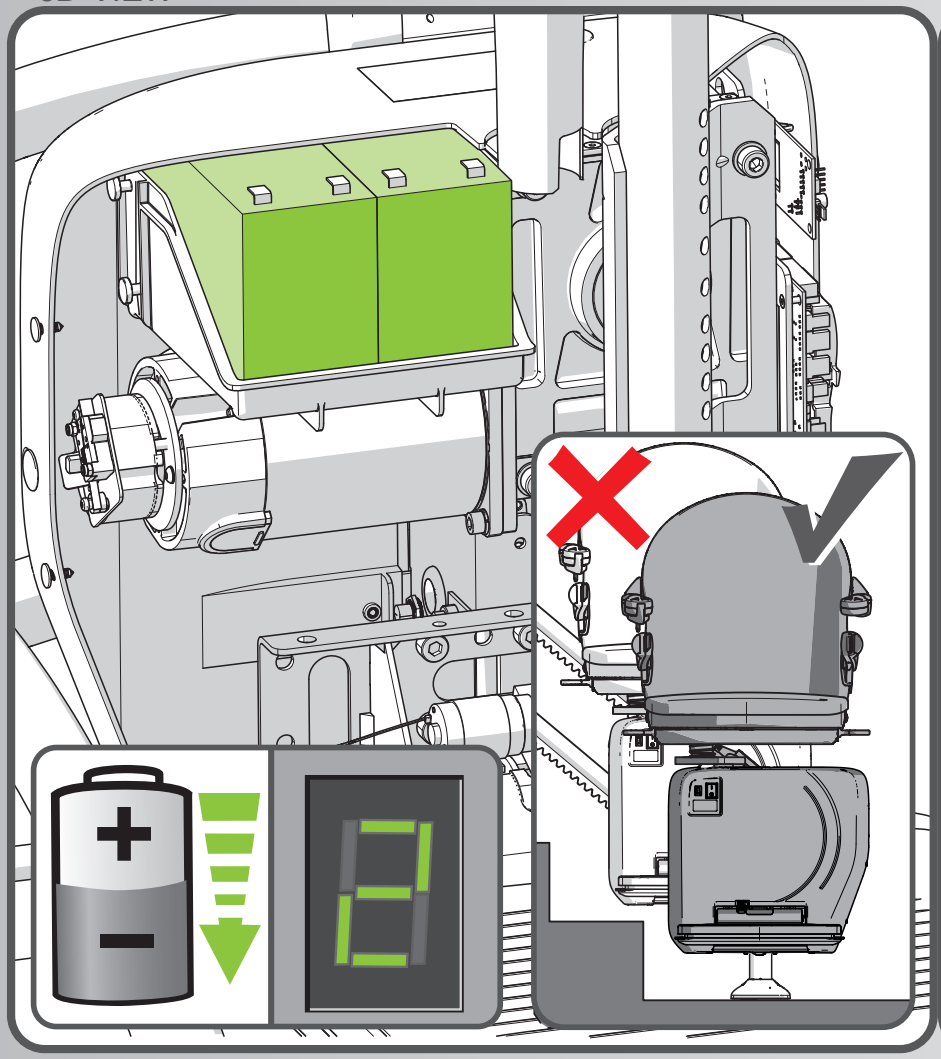

The powerpack has 2 batteries of 12 V=. The expected useful life of the batteries is 3 years, depending on the usage intensity and the conditions.

Power consumption less than 8 dollar a year.

THE FOOTREST_*folding*

3D-VIEW

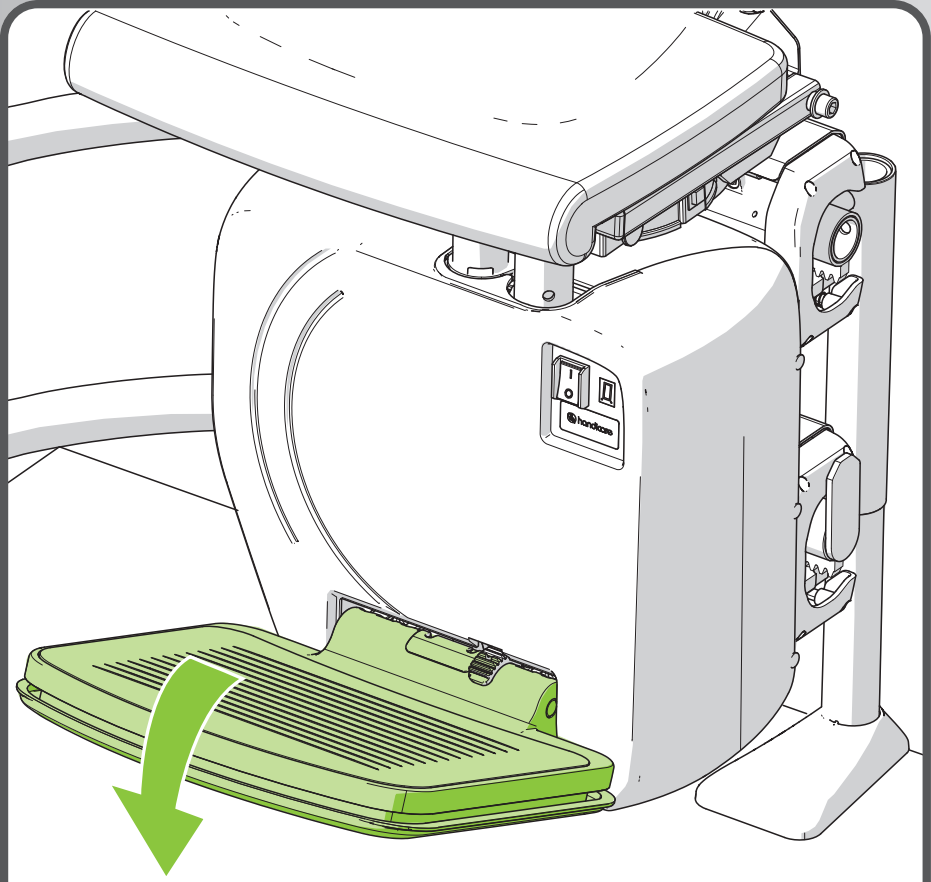

Manual.

Option powered footrest.

Folding mechanism also functions if the chair is swiveled.

The folding of the footrest can be done on any position of the rail.

THE FOOTREST_*dectection*

3D-VIEW

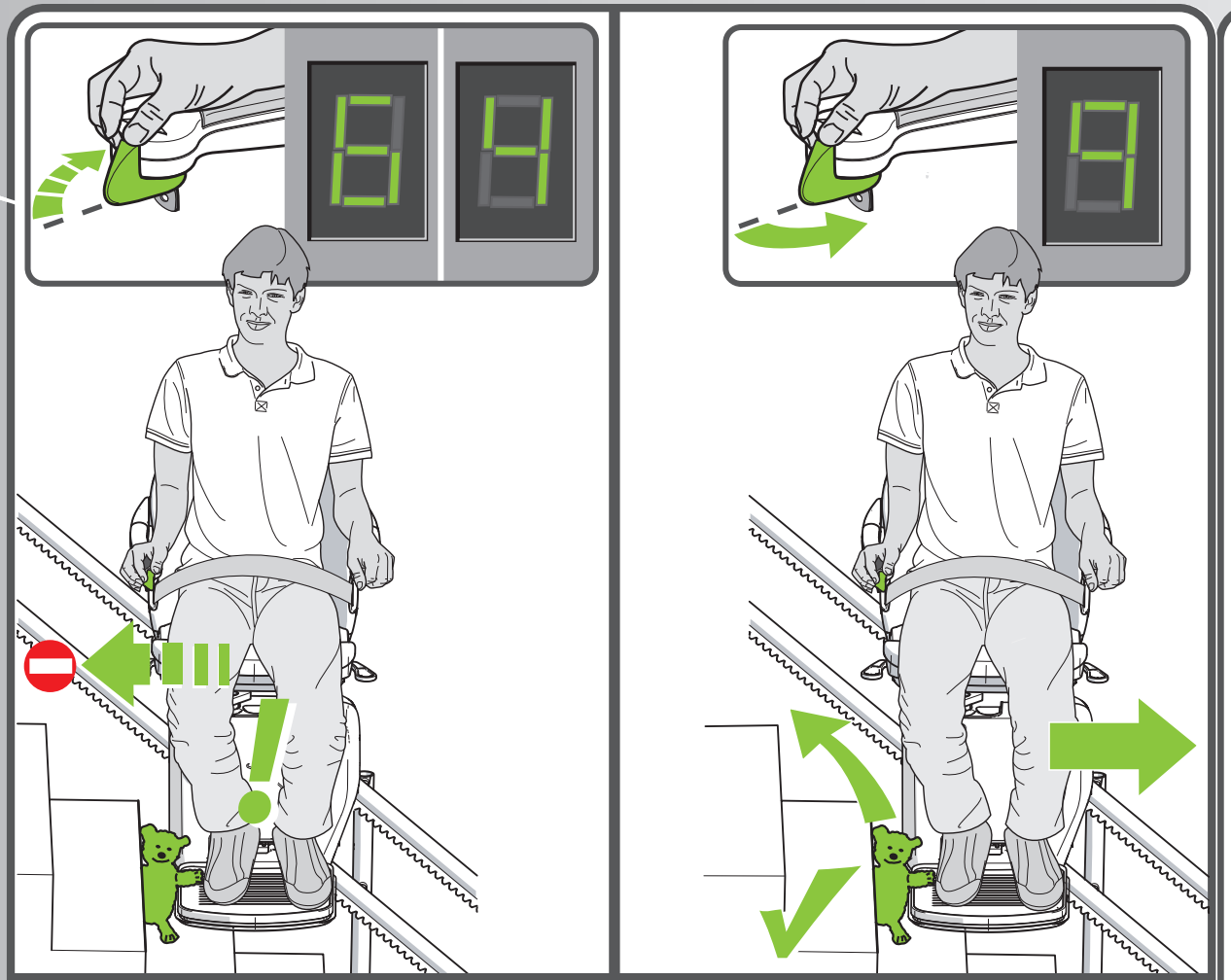

CAUSE

SOLUTION

Footrest detection:

- Both sides
- Frontside
- Underside
- Underside when folded

The chair lift stops automatically in the event that an object becomes jammed between the foot-rest and the stairs.

The stairlift can move again only once the control on the chair or the remote control has been used to move the lift in the opposite direction and the obstacle has been removed.

PARTS

UNIT
BATTERIES
FOOTREST
SAFETYBELT
ARMREST
SWIVEL
CONTROL
USER INTERFACE
KEY SWITCH
ON/OFF-SWITCH
EMERGENCY STOP
ONE TOUCH ALERT
REMOTES
POWER SUPPLY
RAIL
CHARGING POINTS
THE HINGED RAIL

handicare by Savaria®

THE FOOTREST_*position*

3D-VIEW

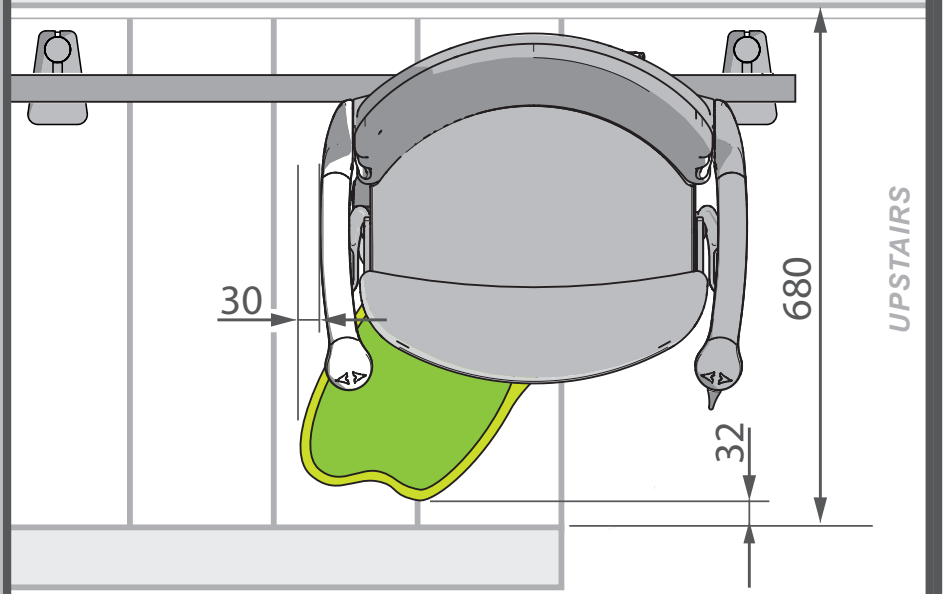

OFFSET FOOTREST

The offset footrest

A minimum overrun of 5,9 inch is required due to the gap between the front edge of the footplate and the landing at the top of the stairs.

THE SAFETY BELT

3D-VIEW

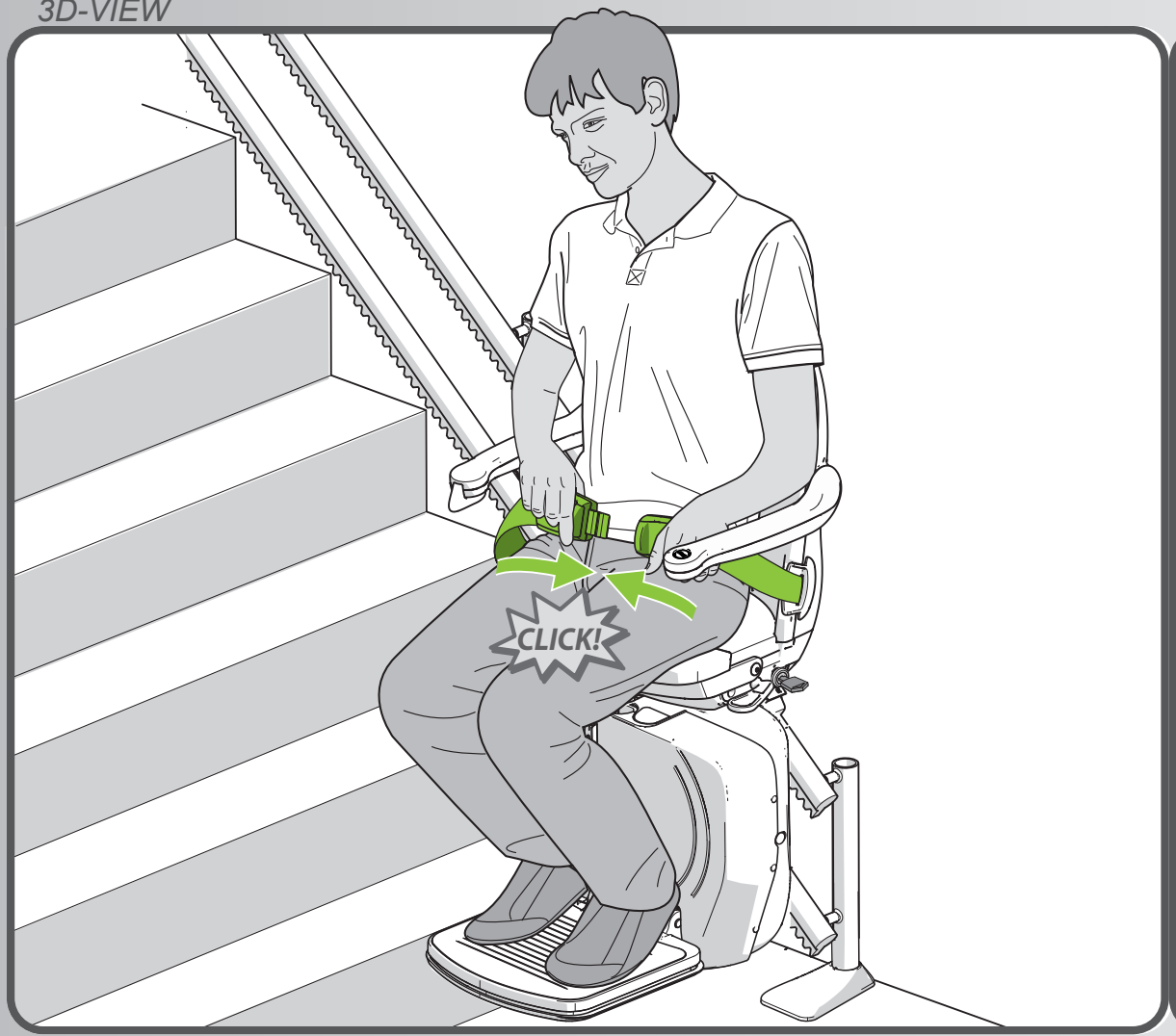

Standard:

The stairlift is fitted with a retractable seatbelt.

Optional seat belts are:

- Velcro seat belt
- XXL velcro seat belt
- Body Harness

Shoulder width for body harness can be:

- Small 11-13 inch
- Medium 13-16,14 inch
- Large 16,14-18,9 inch

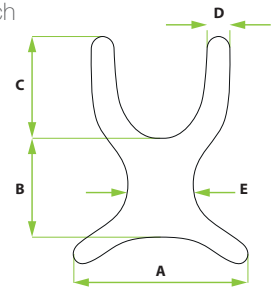

	A	B	C	D	E
Small	23cm	14cm	16cm	4cm	12cm
Medium	30cm	18cm	20cm	4cm	13cm
Large	38cm	21cm	23cm	6cm	13cm

If a longer seatbelt is required, an extension is available.

- The current standard belt is 1000mm.
- The extension is adjustable from 250-500mm in length

PARTS

UNIT
BATTERIES
FOOTREST
SAFETYBELT
ARMREST
SWIVEL
CONTROL
USER INTERFACE
KEY SWITCH
ON/OFF-SWITCH
EMERGENCY STOP
ONE TOUCH ALERT
REMOTES
POWER SUPPLY
RAIL
CHARGING POINTS
THE HINGED RAIL

THE RETRACTABLE SAFETY BELT

3D-VIEW

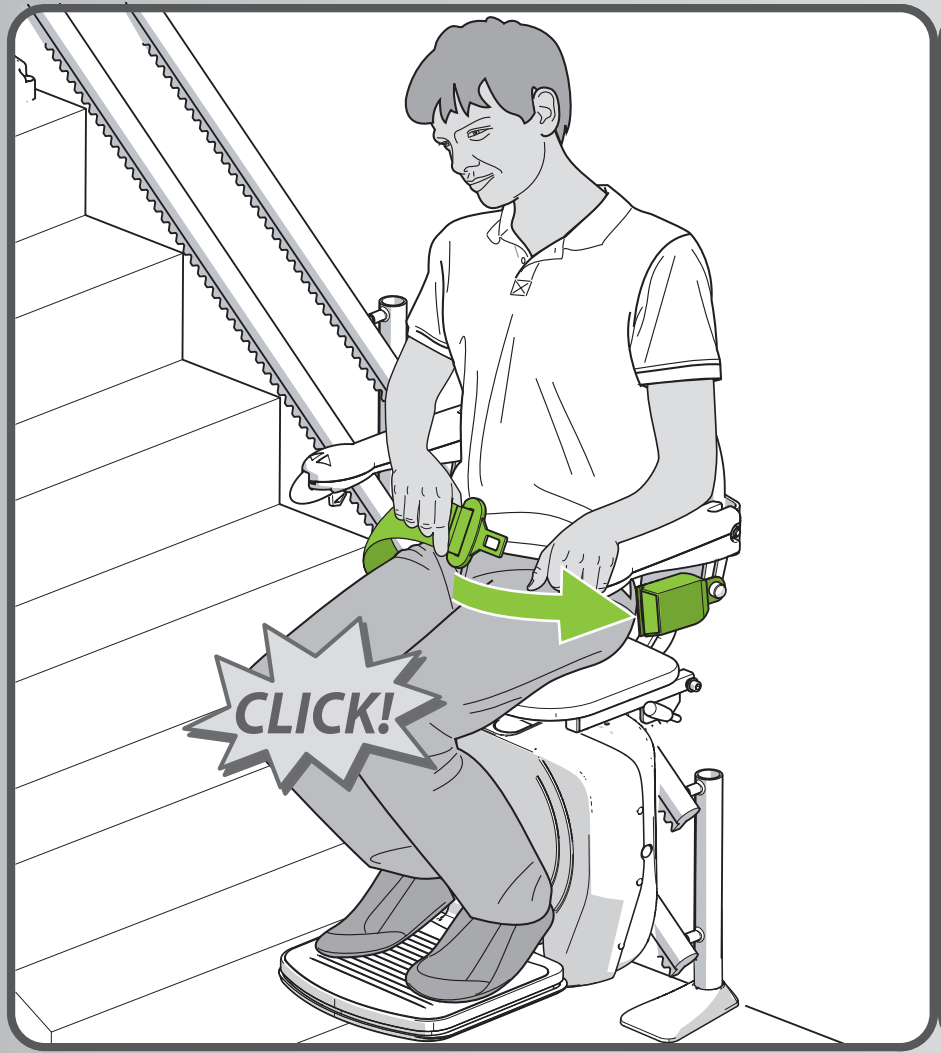

The safety belt is a model designed especially, whereby an ingenious pawl mechanism prevents the belt from extending once it has been secured in the buckle.

The safety belt has a safety feature, which prevents the user to tilt with low speed movement. There is no delay between bending forwards and pulling straight the safety belt.

The safety belt is of the roll up type so in the unused situation there are no parts left about.

The safety belt automatically adjusts to the user, so the lift can be used by persons of different size.

The position of the buckle and the holder is adjustable for each user.

PARTS

UNIT
BATTERIES
FOOTREST
SAFETYBELT
ARMREST
SWIVEL
CONTROL
USER INTERFACE
KEY SWITCH
ON/OFF-SWITCH
EMERGENCY STOP
ONE TOUCH ALERT
REMOTES
POWER SUPPLY
RAIL
CHARGING POINTS
THE HINGED RAIL

handicare by Savaria®

FOOTREST RESTRAINTS

3D-VIEW



Feet restraining strips can be fitted as an option where users need to have feet held safely in place during travel.

Should only be used with a carer in attendance.

THE ARMREST

3D-VIEW

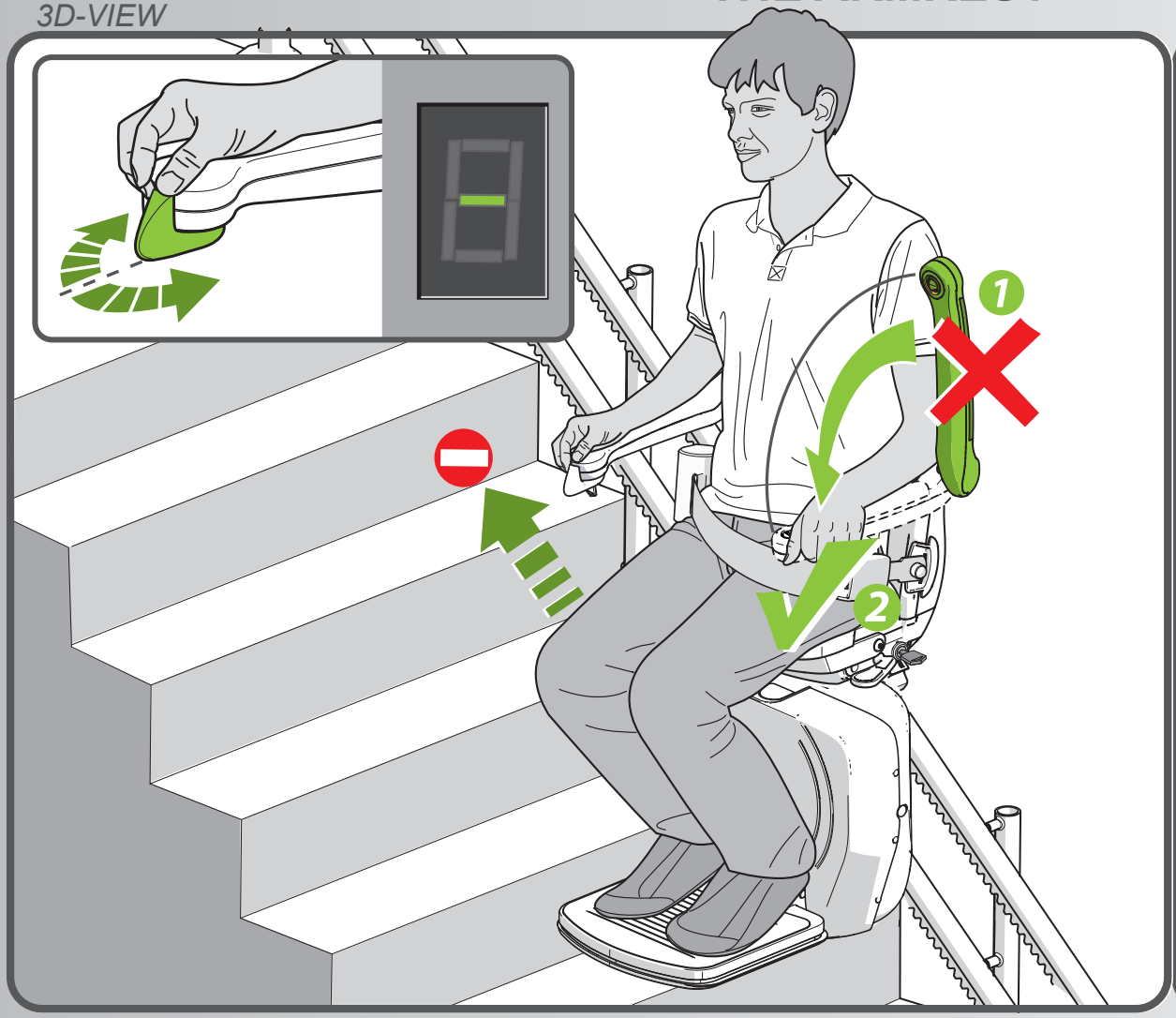

The stairlift has 2 armrests.

- One armrest with control (control on the chair, powered footrest button).
- One armrest without control (optional control of the powered footrest).

By swapping over the short armrest, the chair can be used on smaller staircases.

The control on the chair has priority over the remotes, so the user is always in control.

The chair won't operate from the chair when the armrests are not unfolded.

On the remotes the lift will also function when the armrest are folded.

PARTS

UNIT
BATTERIES
FOOTREST
SAFETYBELT
ARMREST
SWIVEL
CONTROL
USER INTERFACE
KEY SWITCH
ON/OFF-SWITCH
EMERGENCY STOP
ONE TOUCH ALERT
REMOTES
POWER SUPPLY
RAIL
CHARGING POINTS
THE HINGED RAIL

handicare by Savaria®

ARMREST_*spacers*

3D-VIEW

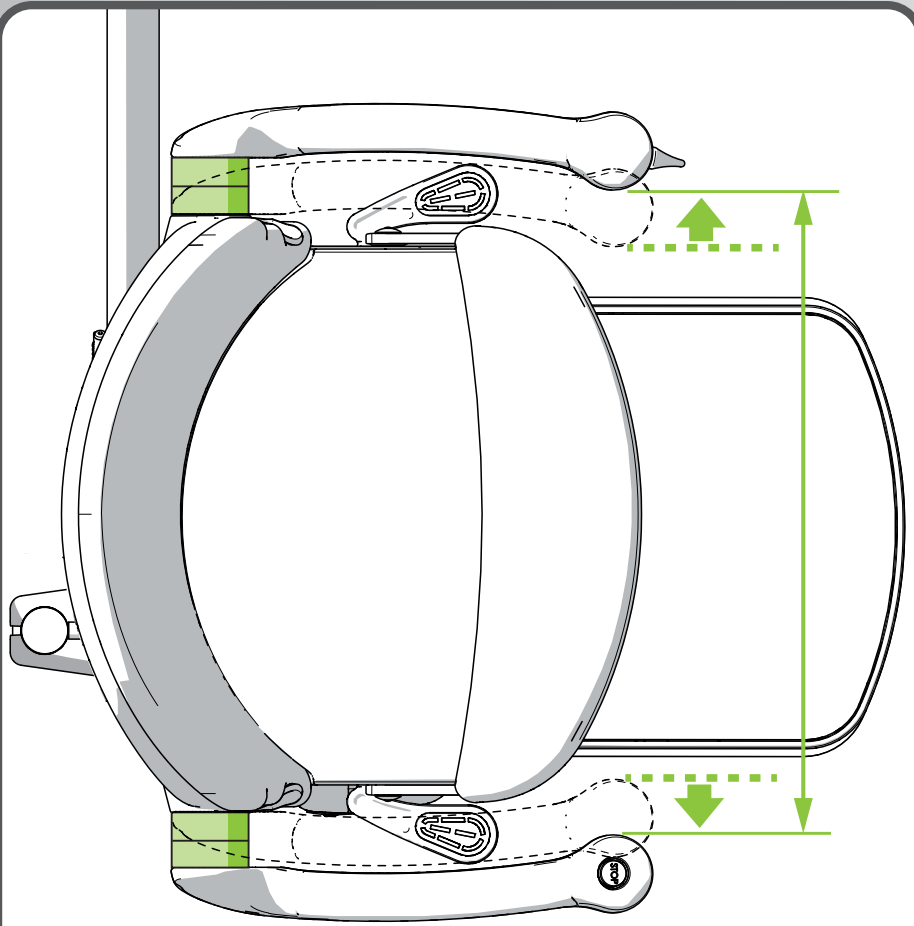

Available for the Smart seat.

Single or double spacers available.

Standard internal width is 16,14 inch

Single spacers increase this to 18,11 inch (+1,97 inch).

Double spacers increase this to 20,08 inch (+3,94 inch).

THE MANUAL SWIVEL

3D-VIEW

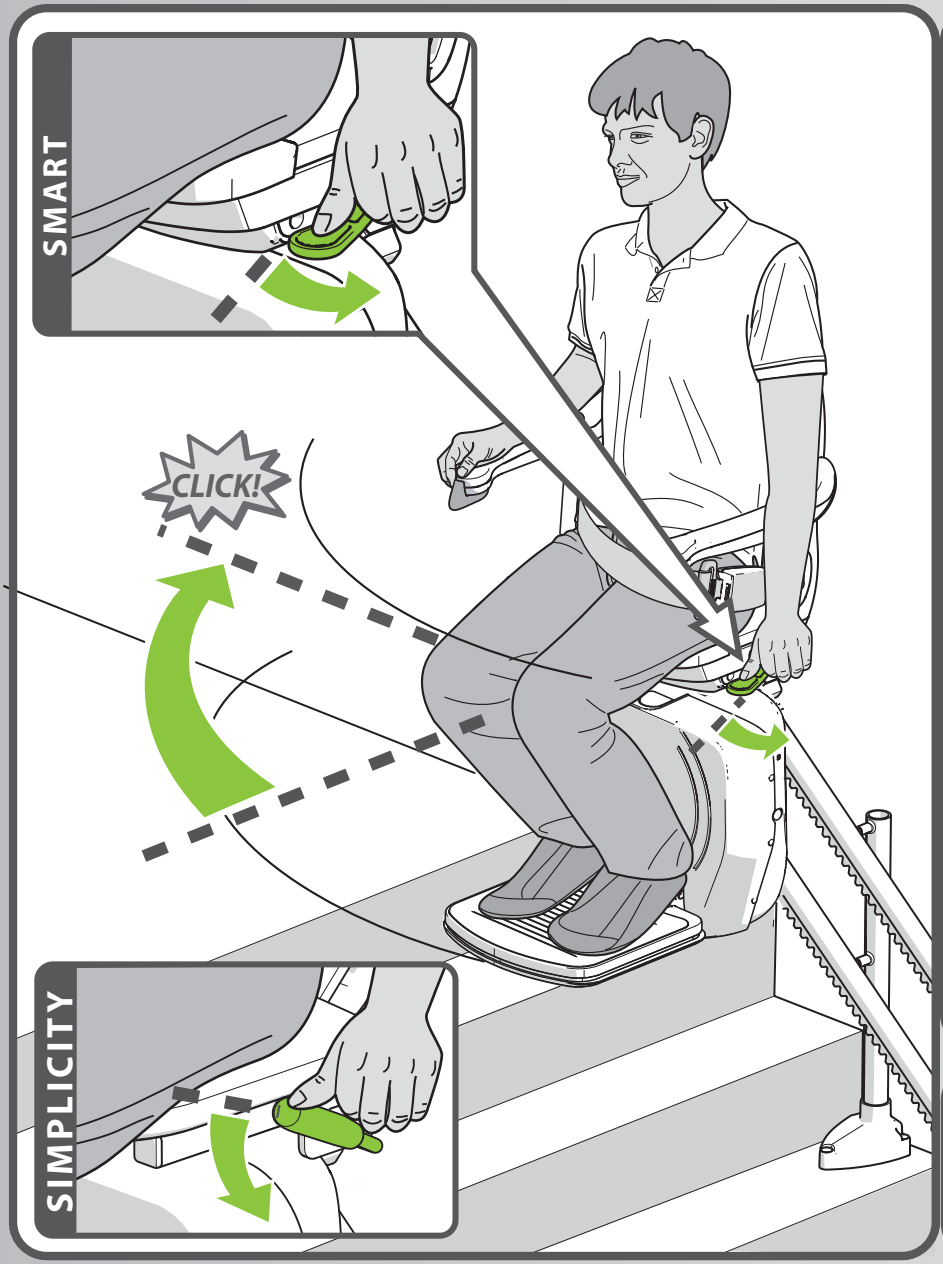

Manual swivel standard on all seats.

The offset seat swivel enables the user to get closer to the landing to get on and off the seat more safely.

No ride possible in swivelled position.

Optional the Powered Swivel (see options).

THE CONTROL

3D-VIEWS

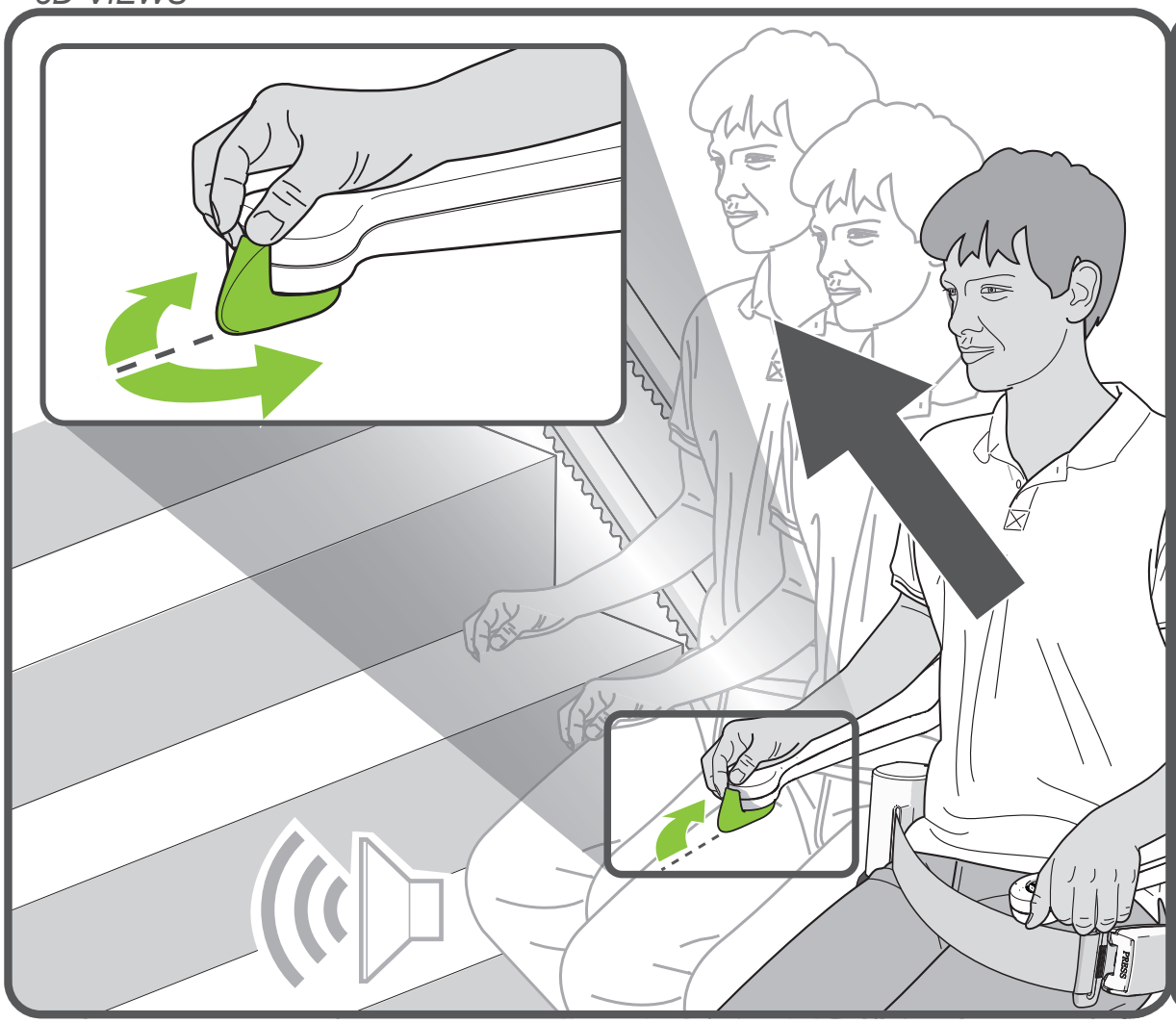

Toggle on frontside of armrest.

The chair moves in the direction selected with the control on the chair. The stairlift stops automatically if the control on the chair is released (hold to run).

The control on the chair has priority over the remotes, so the user is always in control.

One control for all functions, run of the lift, folding hinge, powered swivel.

THE USER INTERFACE

3D-VIEW

Code Código Codice Kode Kod	Display Visualización, Anzeige Ecran, Display Vise, Ostatnia, Visa	Action Acción, Maßnahme Opération, Azione Tiltak, Actie,Handling Akcja, Ação, Åtgärd	No result Ningún resultado,Kein Ergebnis Aucun résultat, nessun risultato Ingen resultater, Geen resultaat nie wynik, nenhum resultado
		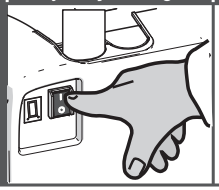	
-		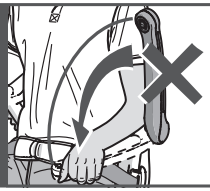	
0		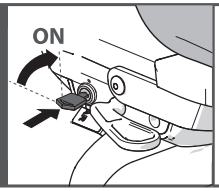	
1		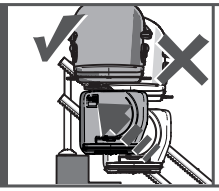	
2		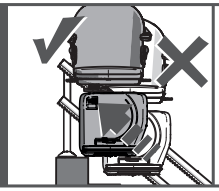	
3		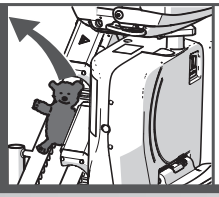	

Lift beeps when not charging.

Option: Lift beeps continually when moving, when you can not see the whole travel of the lift. This can be activated by a dipswitch setting on the pcb.

Display for user interface.
Diagnostic display codes consult manuals.

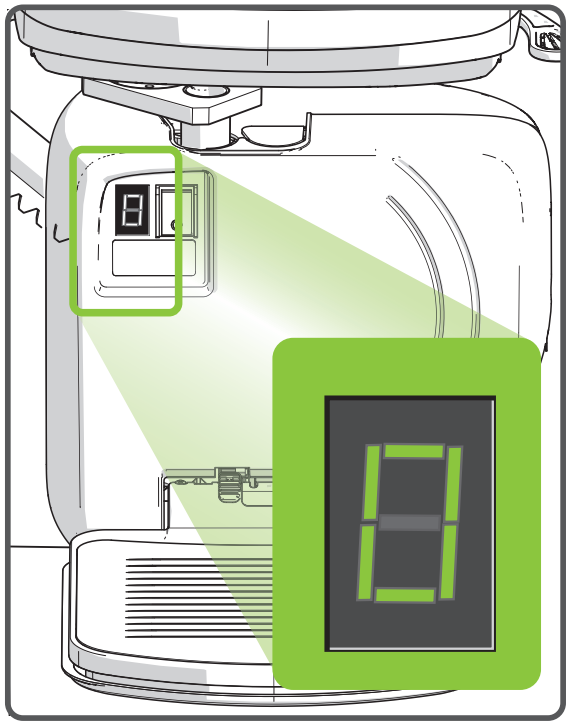

home

PARTS

UNIT
BATTERIES
FOOTREST
SAFETYBELT
ARMREST
SWIVEL
CONTROL
USER INTERFACE
KEY SWITCH
ON/OFF-SWITCH
EMERGENCY STOP
ONE TOUCH ALERT
REMOTES
POWER SUPPLY
RAIL
CHARGING POINTS
THE HINGED RAIL

handicare by Savaria®

THE KEY SWITCH

3D-VIEWS

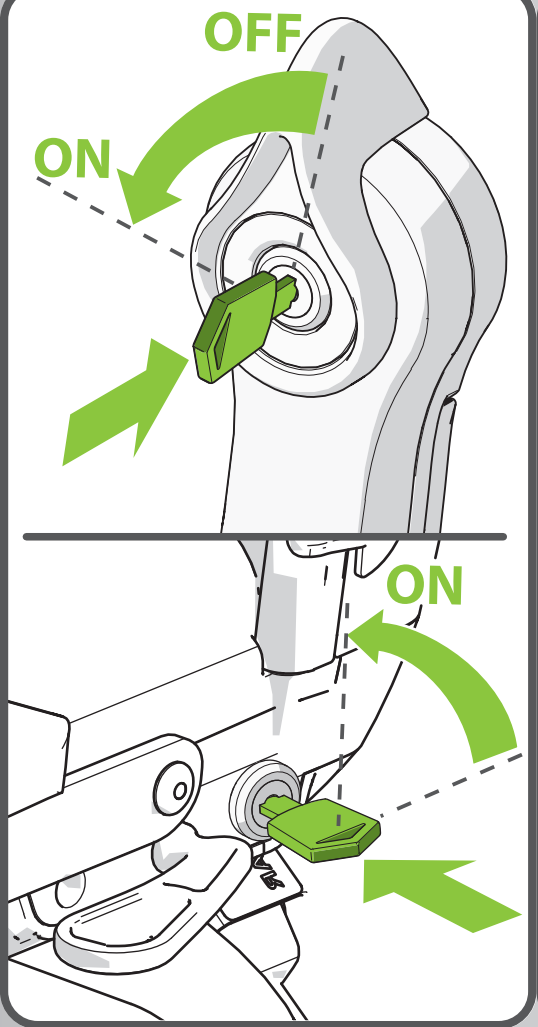

The key-operated switch is a standard fitting in the armrest, and is provided with 2 keys. Extra keys can be ordered from Handicare.

When the key-operated switch is in the “I” position the stairlift can be operated using the control on the chair or the remote control. The key can be removed when the switch is in this position.

The battery will also continue to charge when the key-operated switch is in the “0” position.

When the key-operated switch is in the “0” position the stairlift cannot be operated by either the control on the chair or the remote control. The key can be removed when the switch is in this position.

The keyswitch also switches the powered options.

On the smart seat, the keyswitch is located underneath the seat.

On the simplicity and style seat, the keyswitch is located in the armrest.

PARTS

UNIT
BATTERIES
FOOTREST
SAFETYBELT
ARMREST
SWIVEL
CONTROL
USER INTERFACE
KEY SWITCH
ON/OFF-SWITCH
EMERGENCY STOP
ONE TOUCH ALERT
REMOTES
POWER SUPPLY
RAIL
CHARGING POINTS
THE HINGED RAIL

handicare by Savaria®

home

ON/OFF-SWITCH

3D-VIEW

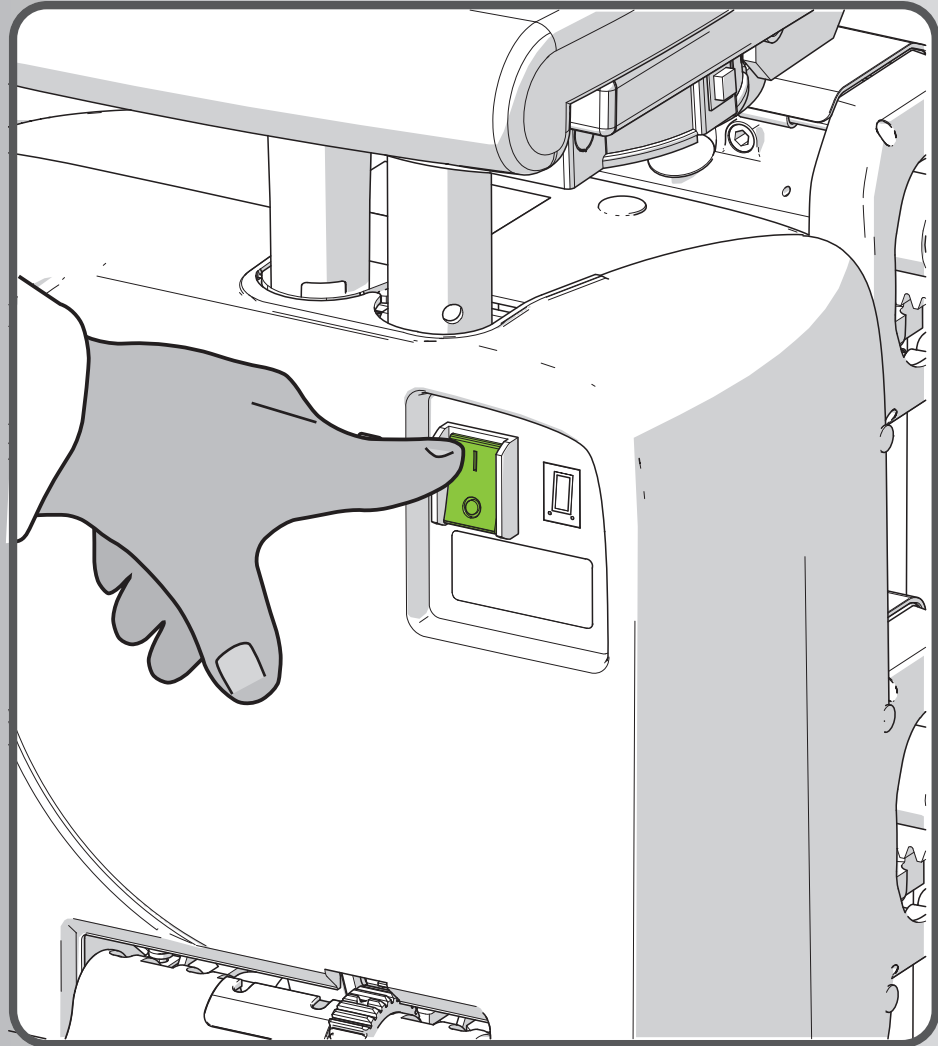

The on/off switch is standard on the carriage and disables the power on the lift.

When switched to the off position the lift will not operate from the toggle nor the remote controls.

When switched to the off-position the lift will not charge. Even if the lift is on a charge point.

PARTS

UNIT
BATTERIES
FOOTREST
SAFETYBELT
ARMREST
SWIVEL
CONTROL
USER INTERFACE
KEY SWITCH
ON/OFF-SWITCH
EMERGENCY STOP
ONE TOUCH ALERT
REMOTES
POWER SUPPLY
RAIL
CHARGING POINTS
THE HINGED RAIL

handicare by Savaria®

THE EMERGENCY STOP

3D-VIEW

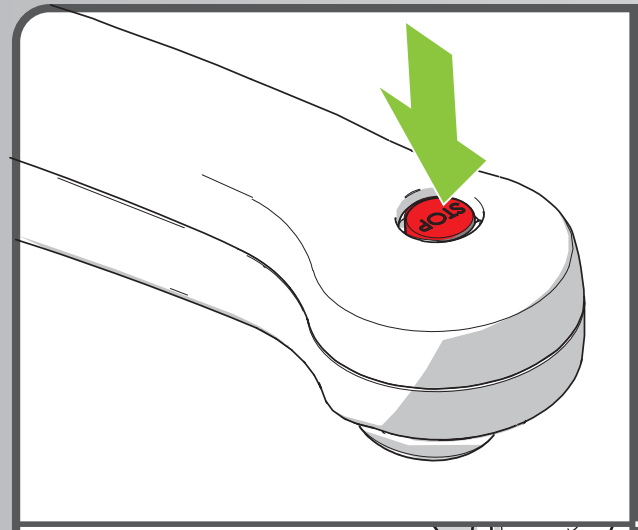

ON ARMREST

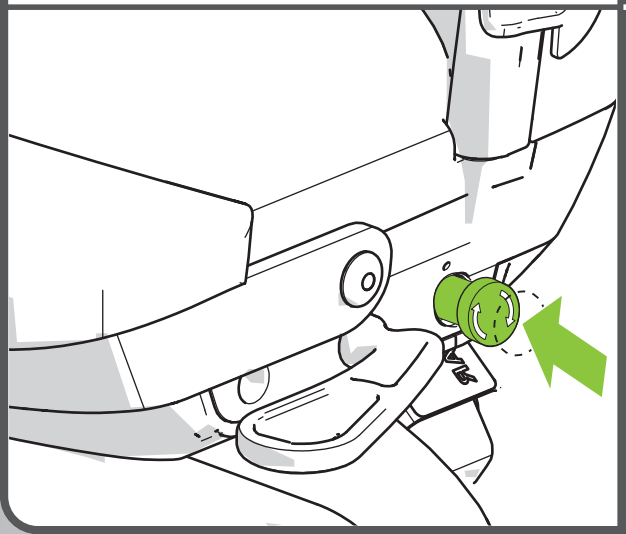

UNDER SEAT (OPTIONAL)

In an emergency, press the stop button once. The stop button is illuminated.

The lift stops straight away.

The stop button can be released by pushing the stop button.

The mushroom type emergency stop is available as an option, if required by national regulations.

Optional: The stop button can be released by turning the stop button.

PARTS

UNIT
BATTERIES
FOOTREST
SAFETYBELT
ARMREST
SWIVEL
CONTROL
USER INTERFACE
KEY SWITCH
ON/OFF-SWITCH
EMERGENCY STOP
ONE TOUCH ALERT
REMOTES
POWER SUPPLY
RAIL
CHARGING POINTS
THE HINGED RAIL

handicare by Savaria®

THE TWO-WAY VOICE COMMUNICATION (ONE TOUCH ALERT)

3D-VIEW



In the rare event of a lift breakdown, our communication system allows users to call their emergency contacts, such as a friend or family member, directly from their stairlift. They can save up to three contacts, so if one doesn't answer, they can work through the contacts - ideal for when someone lives alone.
To use: press and hold the yellow button for three seconds.
This then dials the input numbers consecutively and when connected the user is able to speak directly with their chosen contact.

- Partners can choose to have the One Touch Alert delivered as a kit for them to fit.
- They can also choose to have this pre-installed in the factory.
- Partners will be responsible for purchasing and managing the sim cards.
- The sim cards need to be a nano sim for mobile calling, and no data connection is required.
- Instructions on the App can be found in the Installation Manual.

The surveyor will have the One Touch Alert detailed on the risk assessment form, where it must be discussed. Everyone must sign a waiver if it's decided they do NOT want it.
Contacts are set up as three different contacts, then Handicare customer services, followed by the emergency services - these are both optional for the customer, as some may prefer not to have the last two in case of accidental dialing.
There is an App and instruction guide as to how to use the App, which is included in the owner's manual.
They can scan the QR code to follow simple instructions, but this will be used rarely and only if the customer wants to change the contact details stored within the App.
The App can be downloaded on either Android or iOS devices.

The Two-way voice communication device is a demand according to EN 81-40:2020, and can be omitted where dependable assistance is always present or where alternative reliable means of two-way voice communication is installed in the building
which can be activated from the stairlift is all positions.

PARTS

UNIT
BATTERIES
FOOTREST
SAFETYBELT
ARMREST
SWIVEL
CONTROL
USER INTERFACE
KEY SWITCH
ON/OFF-SWITCH
EMERGENCY STOP
ONE TOUCH ALERT
REMOTES
POWER SUPPLY
RAIL
CHARGING POINTS
THE HINGED RAIL

THE REMOTES

3D-VIEW

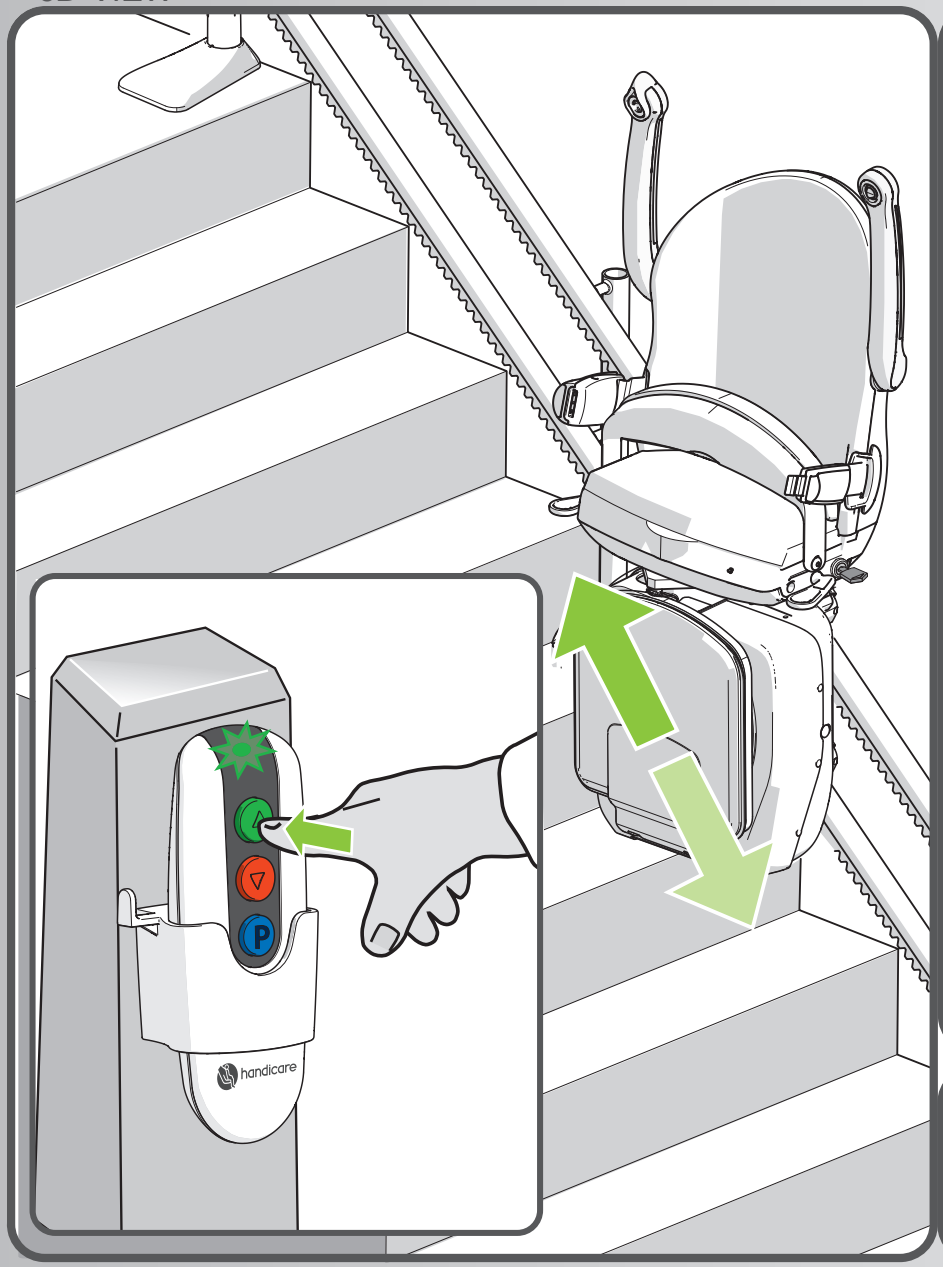

The stairlift's power supply is obtained from a wall socket located at an overall distance of no more than 29,5 ft from the top or the bottom end of the rail.

The dealer will fit a plug to the battery-charger's power cable which complies with the local regulations.

The installation is connected to earth.

The power consumption of the battery charger is 36 Watt. Consequently the installation of a separate group is not required.

The dealer is responsible for compliance with the local regulations applicable to the electrical installation.

Power connection point:
Standard track can be attached Top or Bottom.

Track with powered hinge always attached at the top.

home

PARTS

UNIT
BATTERIES
FOOTREST
SAFETYBELT
ARMREST
SWIVEL
CONTROL
USER INTERFACE
KEY SWITCH
ON/OFF-SWITCH
EMERGENCY STOP
ONE TOUCH ALERT
REMOTES
POWER SUPPLY
RAIL
CHARGING POINTS
THE HINGED RAIL

handicare by Savaria®

THE RAIL

3D-VIEW

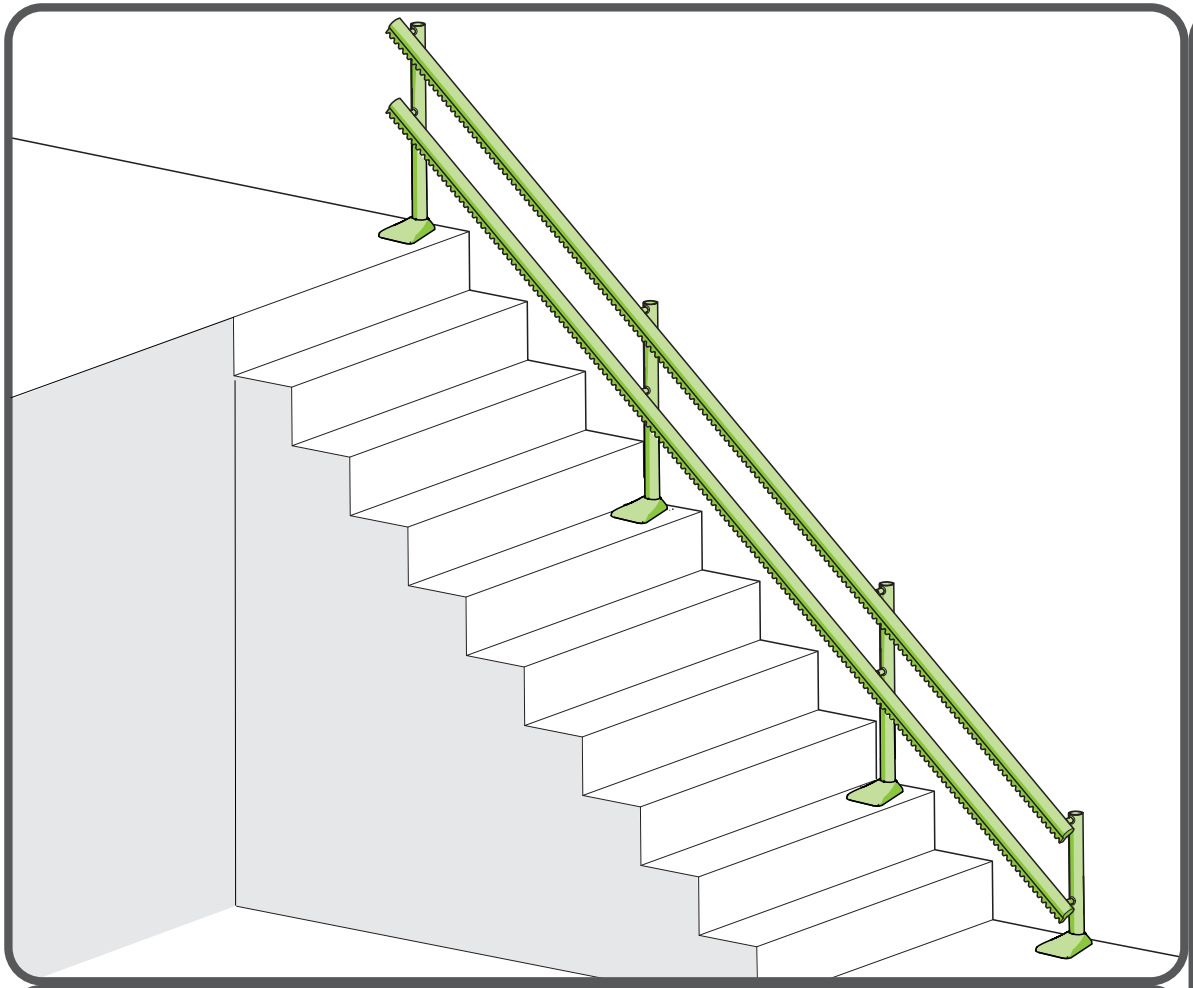

The rail is a secure twin tube system (1,5 inch).

The rail is delivered in 3 colours:

- light grey (RAL 9002)
- brown (RAL 8024)
- jet black (RAL 9005)

Other RAL colours are availbale on demand for an upcharge price and longer delivery time.

Spacers (carpet runners) can be delivered to compensate for the height of the runner and provide a level and stable mounting for the track feet.

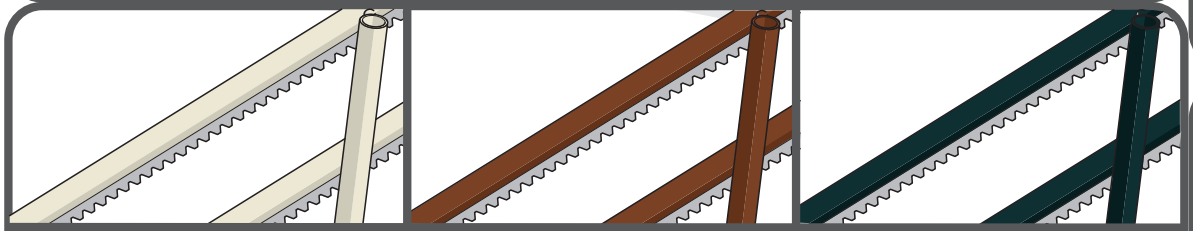

LIGHT GREY | BROWN | JET BLACK

Optional the hinged rail (see options).
Go to attachments to see how to mount the rail in partical situations.

home

PARTS

UNIT
BATTERIES
FOOTREST
SAFETYBELT
ARMREST
SWIVEL
CONTROL
USER INTERFACE
KEY SWITCH
ON/OFF-SWITCH
EMERGENCY STOP
ONE TOUCH ALERT
REMOTES
POWER SUPPLY
RAIL
CHARGING POINTS
THE HINGED RAIL

handicare by Savaria®

The measurements given are theoretical, might differ in practice due to flexibility in the system.

THE CHARGING (STOP) POINTS

TOP VIEW

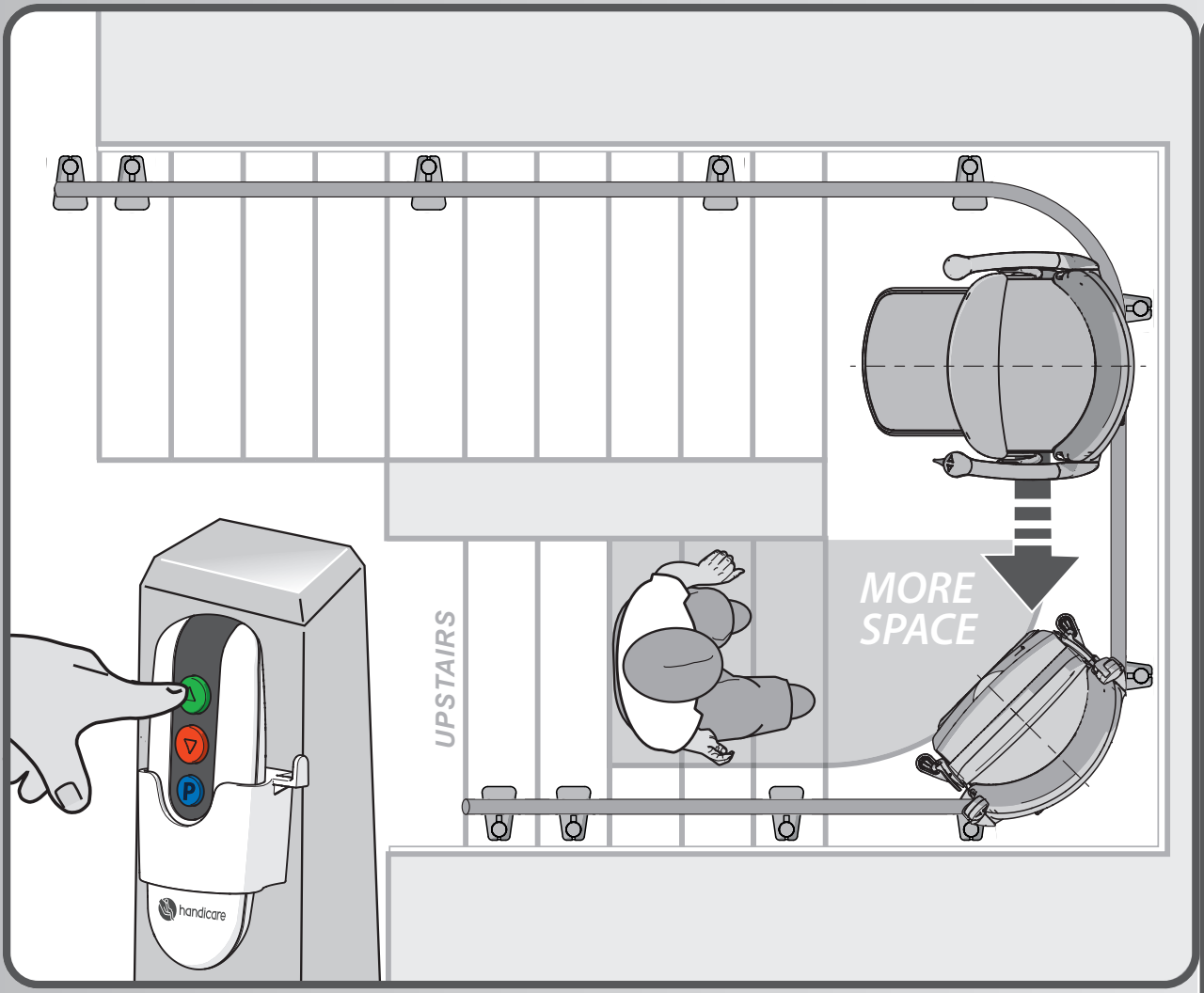

An additional charge contact can only be installed on a straight piece of rail with minimum 6,5 inch.

The lift passes additional charging point when using the toggle.

Option: intermediate stop option (not in combination with powered swivel). Lift will stop at every charge contact on the 4000 rail.

The swivel will not operate at the intermediate stop point – it will only swivel at the top of the stairs.

No extra charge points in combination with hinge possible.

When using the remotes: the lift stops on intermediate charging point only in up direction.

A charge point can be placed anywhere above the hinge provide it is more than 25,6 inch away from the hinge and on a straight section of rail

After a bend needs to be 6,5 inch for a charge point at the top of the stairs otherwise it will be placed before the bend.

PARTS

UNIT
BATTERIES
FOOTREST
SAFETYBELT
ARMREST
SWIVEL
CONTROL
USER INTERFACE
KEY SWITCH
ON/OFF-SWITCH
EMERGENCY STOP
ONE TOUCH ALERT
REMOTES
POWER SUPPLY
RAIL
CHARGING POINTS
THE HINGED RAIL

THE HINGED RAIL

3D-VIEW

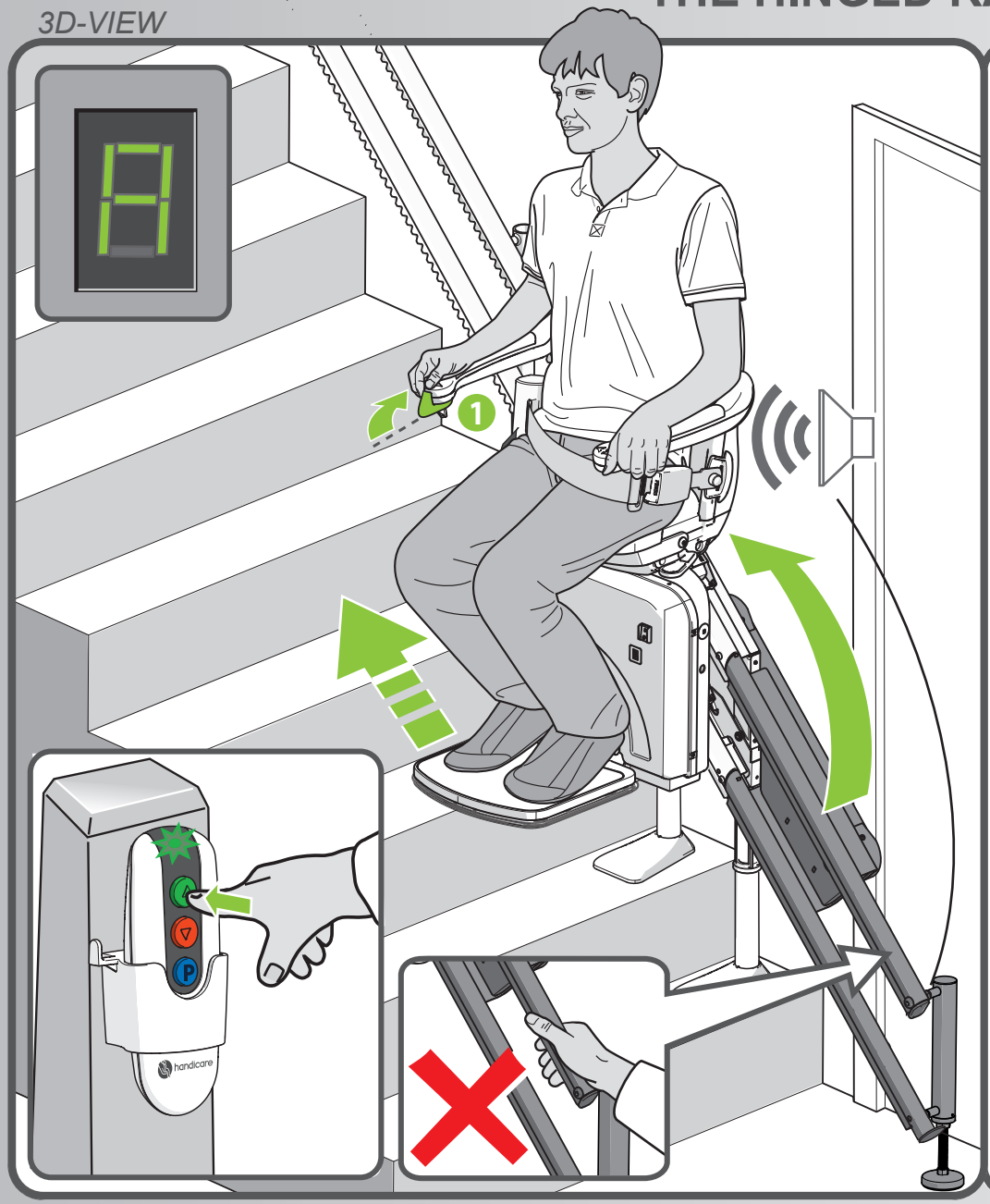

Rails terminating in front of a door can be fitted with a hinged rail which automatically folds out of the way while the chair is ascending the stairs.

The hinged rail is operated using the control on the chair or the remotes at a fixed position along the rail.

The distance between the rail and the wall is 1,8 inch more than a rail without a hinged rail.

A lift with a powered hinge requires a different powerpack.

The stairlift is charging at the position in which the chair lift stops whilst operating the hinged rail.

The lift is not charging when on the foldable hinge.

Maximum weight 160 kg (available in Q2 2026).

If there is only one exit which can be (partially) blocked by the hinge can not be done.

The minimum distance required to install a hinge rail is 42,5 inch from the 1st riser to the back wall. The hinge will stick apr. 2,4 inch before the nose of the first step when it is completely folded.

The hinged rail will stick out more If less space available.

The hinge part is 38,2 inch and fixed to 46°

Distance frontside rail to wall is 5,7 inch.

Relocated charge point must be a minimum of 66,9 inch away from the hinge to ensure hinge does not hit seat when folded.

Cannot have additional charge points (ACP) or stop points (ISP) on a hinge.

No outdoor hinge

See also page 62

home

PARTS

UNIT
BATTERIES
FOOTREST
SAFETYBELT
ARMREST
SWIVEL
CONTROL
USER INTERFACE
KEY SWITCH
ON/OFF-SWITCH
EMERGENCY STOP
ONE TOUCH ALERT
REMOTES
POWER SUPPLY
RAIL
CHARGING POINTS
THE HINGED RAIL

handicare by Savaria®

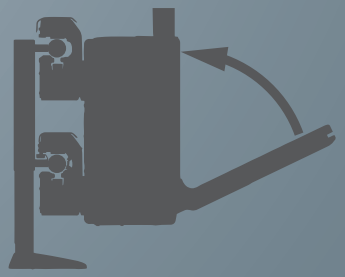

Options

THE POWERED SWIVEL CHAIR

3D-VIEW

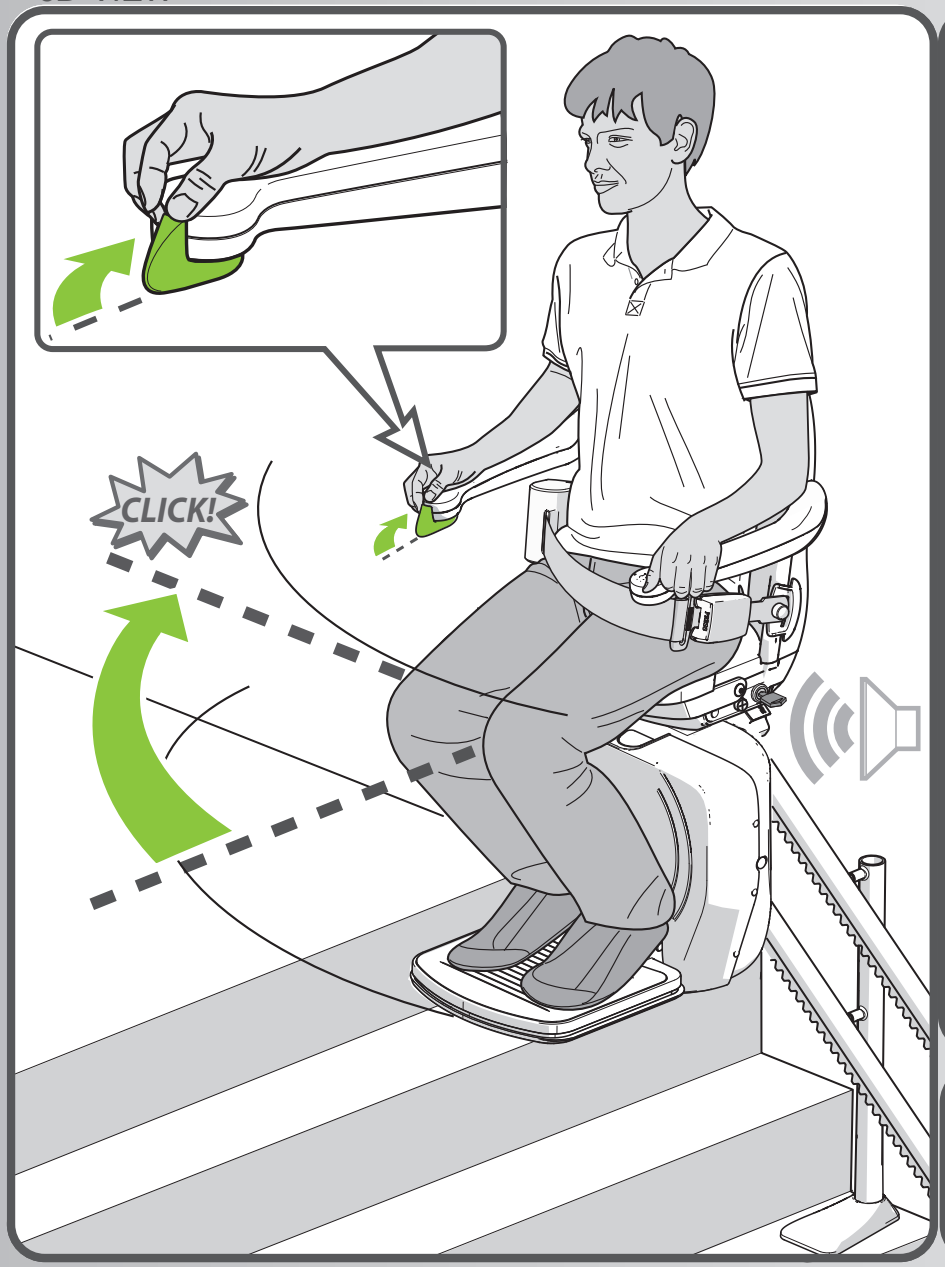

Swivel only at the top.

The offset seat swivel enables the user to get closer to the landing to get on and off the seat more safely.

No ride possible in swivelled position.

The control on the chair must be held at the top of the stairs to activate the swivel chair.

The swivel chair will also turn automatically by operating the remotes.

In emergency the powered swivel chair can be released by hand.



Optional extras

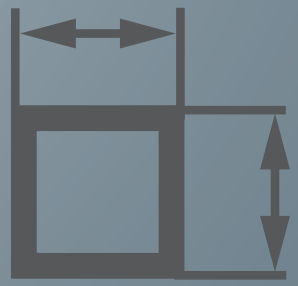

Dimensions

DIMENSIONS_*smart seat*

TOP VIEW - SIDEVIEW - FRONT VIEW

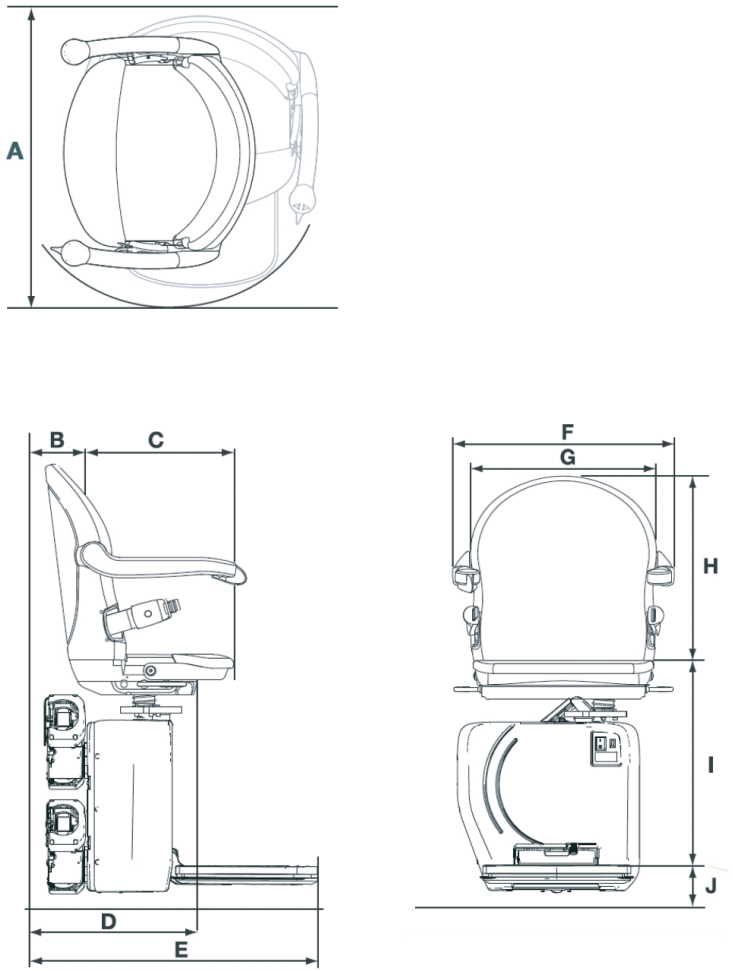

Smart Seat	Dimensions
A Minimum swivel radius - With short armrest	27,56-29,53” -
B Wall to inner seat back	5,12”
C Seat depth	14,17-16,73”
D Minimum folded width to footplate	15,94”
E Minimum open width to edge footplate To small footplate To offset footplate	27,36” 25” 25,79”
F Armrest width – external	20,87-24,8”
G Armrest width – internal	16,14-20,08”
H Seat back height Footplate rake adjustment	17,91” 1,97”
I Footplate to seat height With footplate rake adjustment	19,29-23,23” 17,32-21,26”
J Minimum footplate height	2,76” *
Minimum track intrusion into staircase	4,9”
Heavy duty weight limit	352,7 lbs/25¼st
Speed	0.39ft/sec
Maximum staircase angle	56°

* At horizontal landings

The measurements given are theoretical, might differ in practice due to flexibility in the system.

DIMENSIONS_*simplicity seat*

TOP VIEW - SIDEVIEW - FRONT VIEW

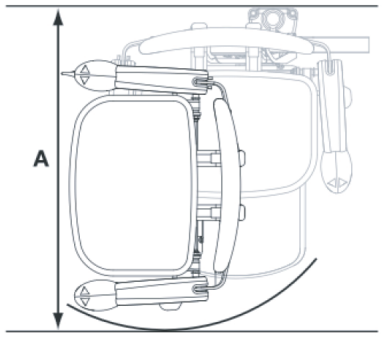

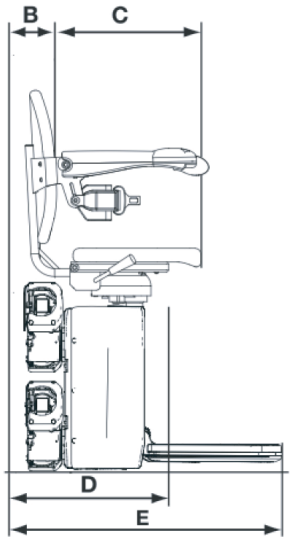

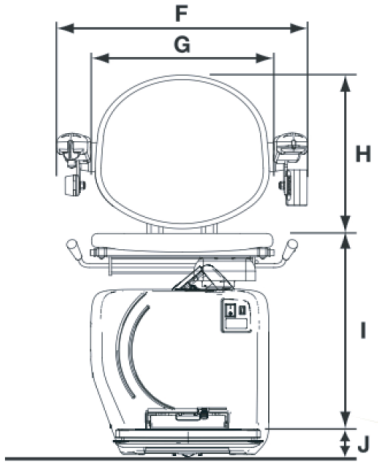

Simplicity Seat	Dimensions
A Minimum swivel radius - With short armrest	28,94” 27,56”
B Wall to inner seat back	4,33”
C Seat depth	15,35”
D Minimum folded width to footplate	15,94”
E Minimum open width to edge footplate To small footplate To offset footplate	27,36” 25” 25,79”
F Armrest width – external	23,03”
G Armrest width – internal	16,93”
H Seat back height Footplate rake adjustment	15,74” 1,97”
I Footplate to seat height With footplate rake adjustment	18,5-21,65” 16,54-19,68”
J Minimum footplate height	2,76” *
Minimum track intrusion into staircase	4,9”
Heavy duty weight limit	352,7 lbs/25¼st
Speed	0.39ft/sec
Maximum staircase angle	56°

* At horizontal landings

DIMENSIONS_*style seat*

TOP VIEW - SIDEVIEW - FRONT VIEW

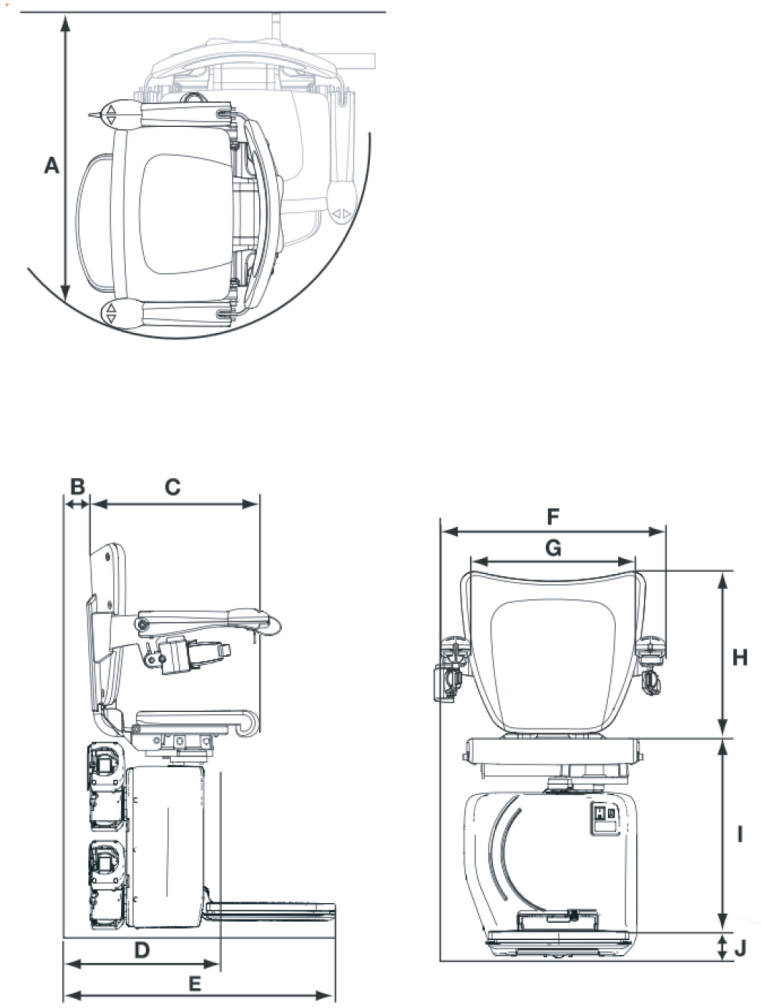

Style seat	Dimensions
A Minimum swivel radius - With short armrest	28,94” 27,56”
B Wall to inner seat back	4,33”
C Seat depth	15,35”
D Minimum folded width to footplate	15,94”
E Minimum open width to edge footplate To small footplate To offset footplate	27,36” 25” 25,79”
F Armrest width – external	23,03”
G Armrest width – internal	16,93”
H Seat back height Footplate rake adjustment	15,74” 1,97”
I Footplate to seat height With footplate rake adjustment	18,5-21,65” 16,54-19,69”
J Minimum footplate height	2,76” *
Minimum track intrusion into staircase	4,9”
Heavy duty weight limit	352,7 lbs/25¼st
Speed	0.39ft/sec
Maximum staircase angle	56°

* At horizontal landings

DIMENSIONS_*perch seat*

TOP VIEW - SIDEVIEW - FRONT VIEW

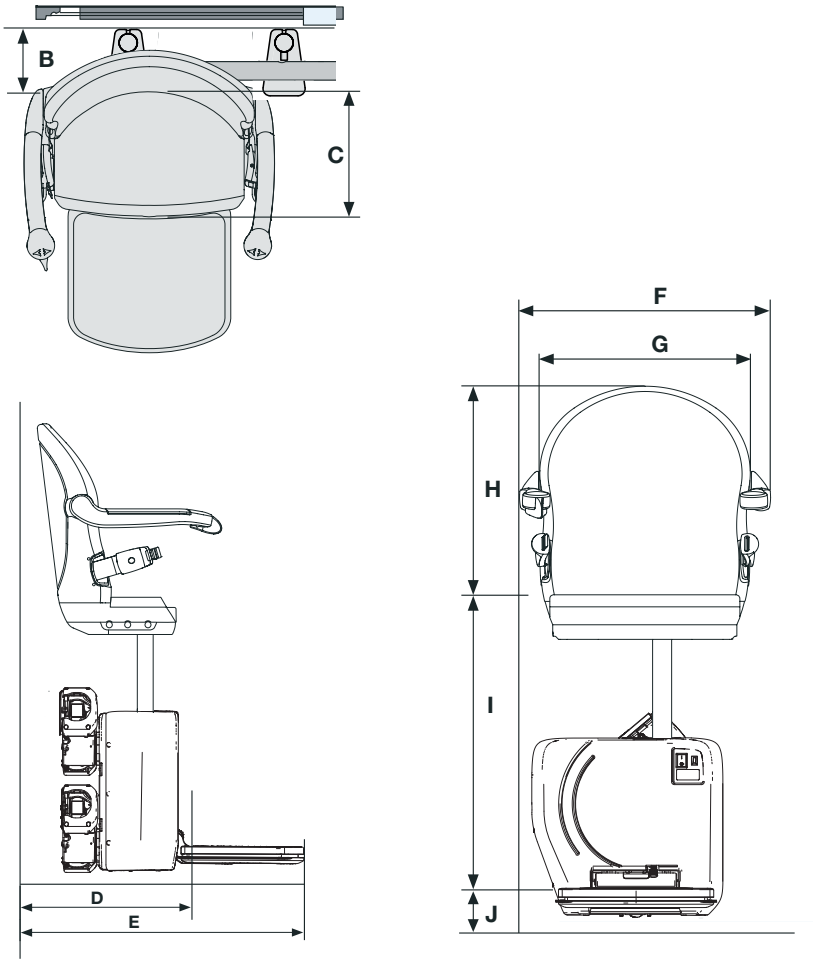

Perch seat	Dimensions
A Minimum swivel radius With short armrest	- -
B Wall to inner seat back	5,12”
C Seat depth	9,72”
D Minimum folded width to footplate	15,94”
E Minimum open width to edge footplate	27,36”
F Armrest width – external	20,87-24,8”
G Armrest width – internal	16,14-20,08”
H Seat back height Footplate rake adjustment	17,91” 1,97”
I Footplate to seat height	24,61-29,53”
J Minimum footplate height	2,76” *
Minimum track intrusion into staircase	4,9”
Standard weight limit	300 lbs
Heavy duty weight limit	350 lbs
Speed	0.39 ft/sec
Maximum staircase angle	56°

* At horizontal landings



Stair types

STRAIGHT

3D-VIEW

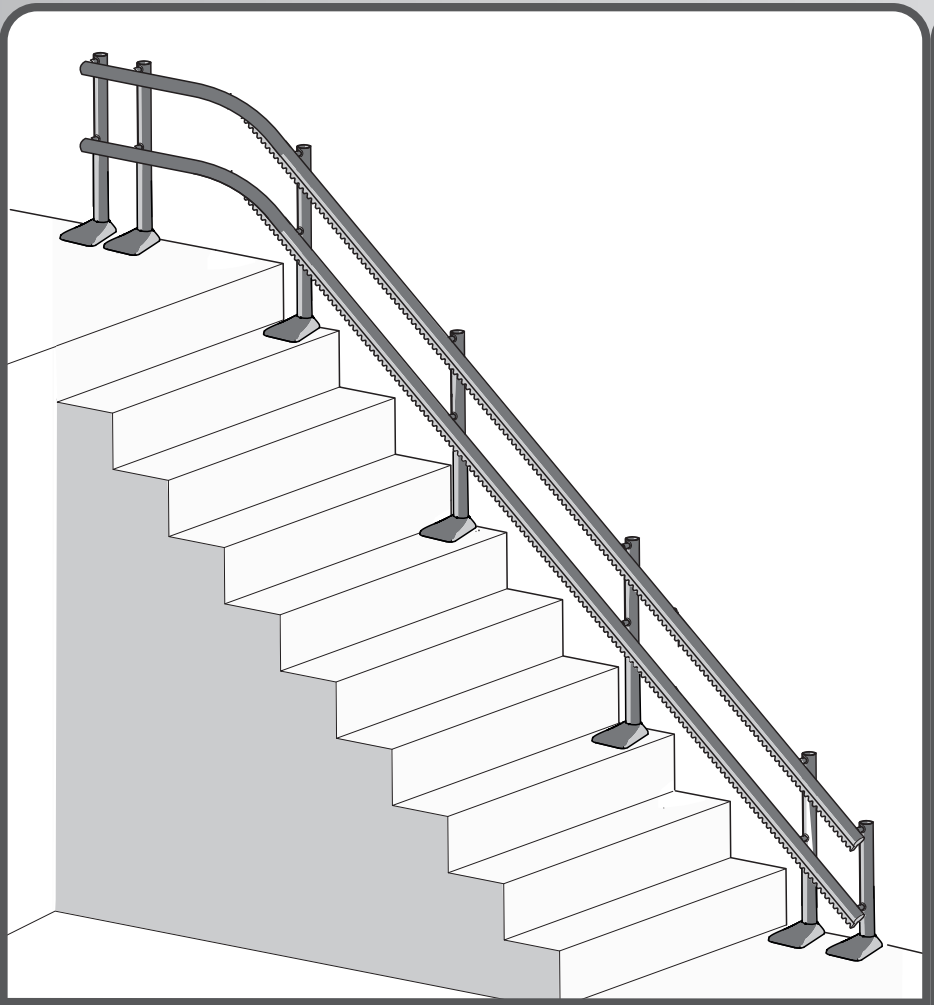

A1

3D-VIEW

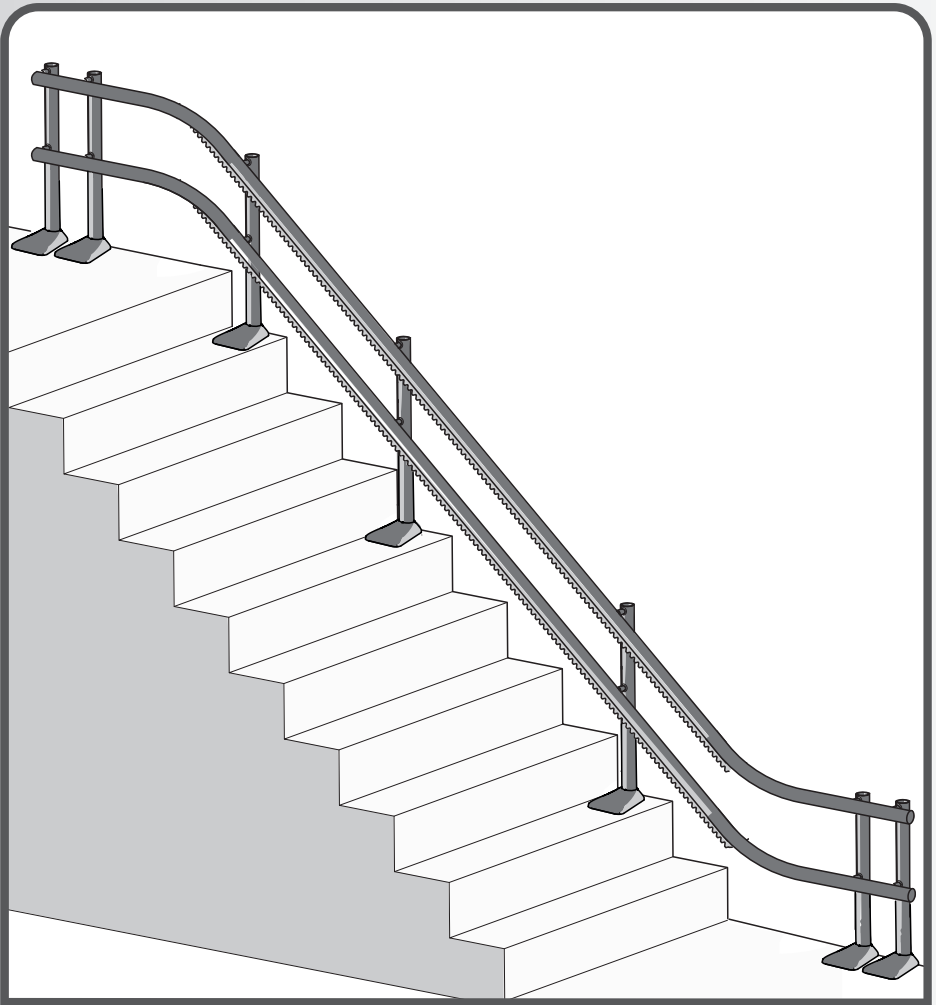

A2

A rail on a straight staircase does not require wall brackets.

home

STAIR TYPES

STRAIGHT
(A1/A2)

NOT STRAIGHT
(C/D/E/F/G/H)

handicare by Savaria®

NOT STRAIGHT

TOP VIEW

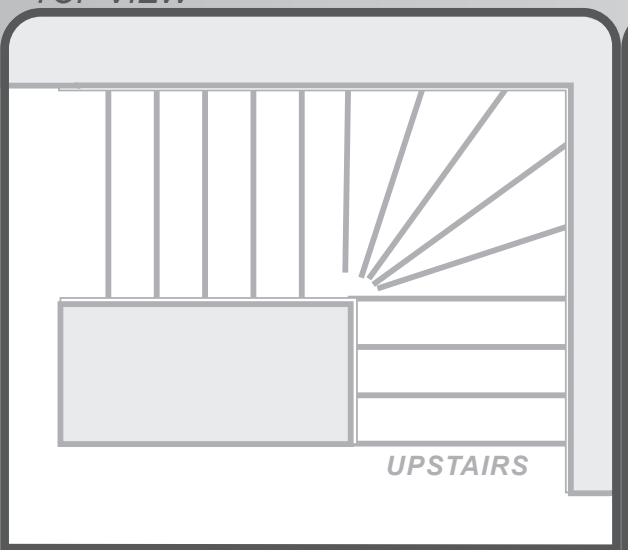

C

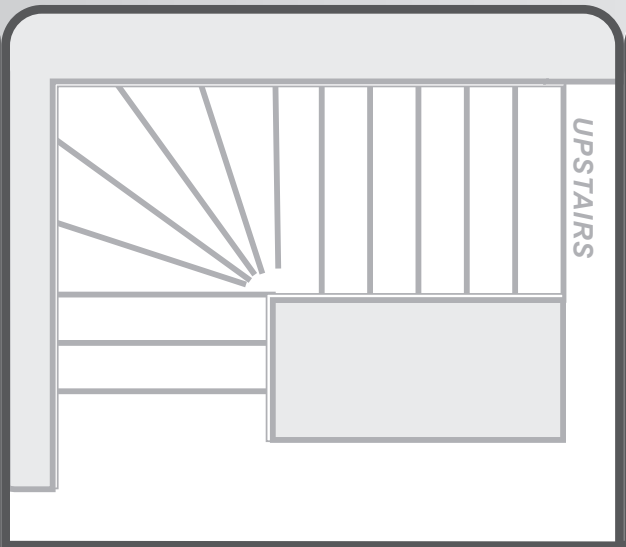

D

TOP VIEW

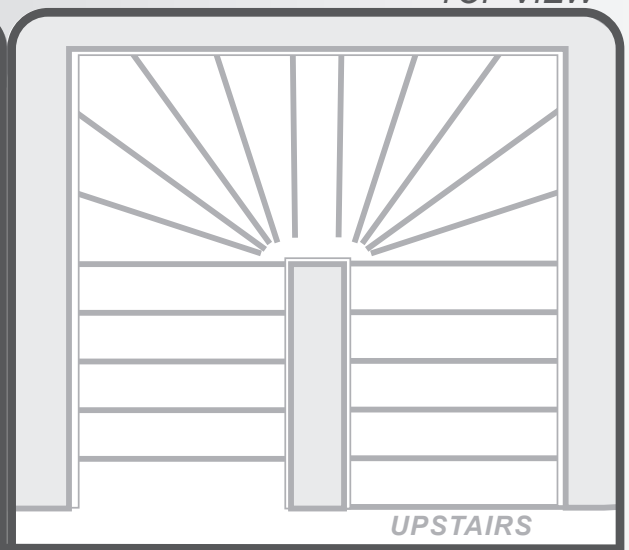

E

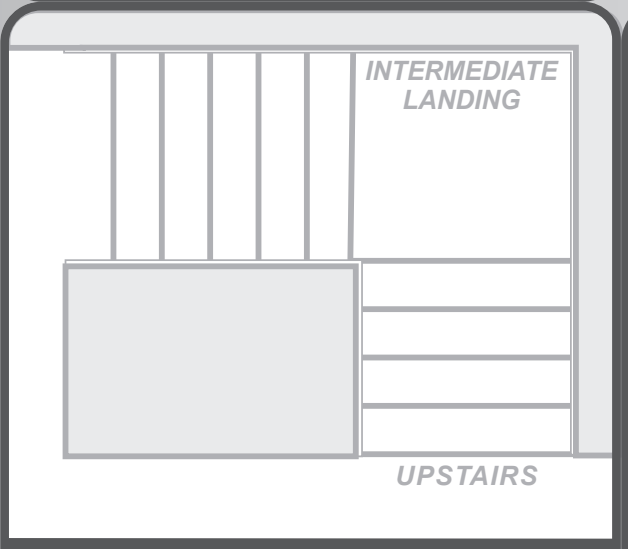

F

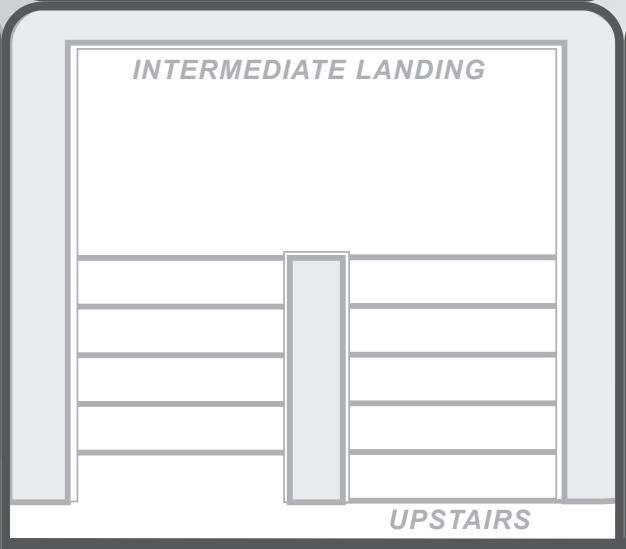

G

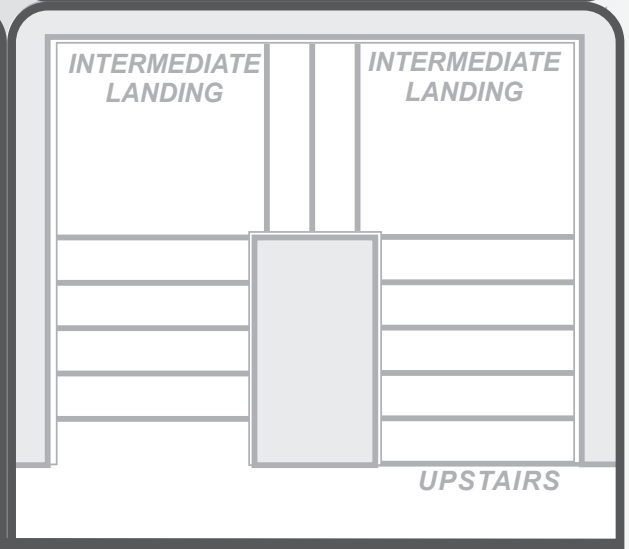

H

Feasible curved stair shapes for the 2000 lifts.

home

STAIR TYPES

STRAIGHT
(A1/A2)

NOT STRAIGHT
(C/D/E/F/G/H)

handicare by Savaria®

The measurements given are theoretical, might differ in practice due to flexibility in the system.

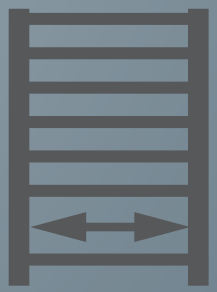

Stair width

STAIR WIDTH_*user*

SIDE VIEW

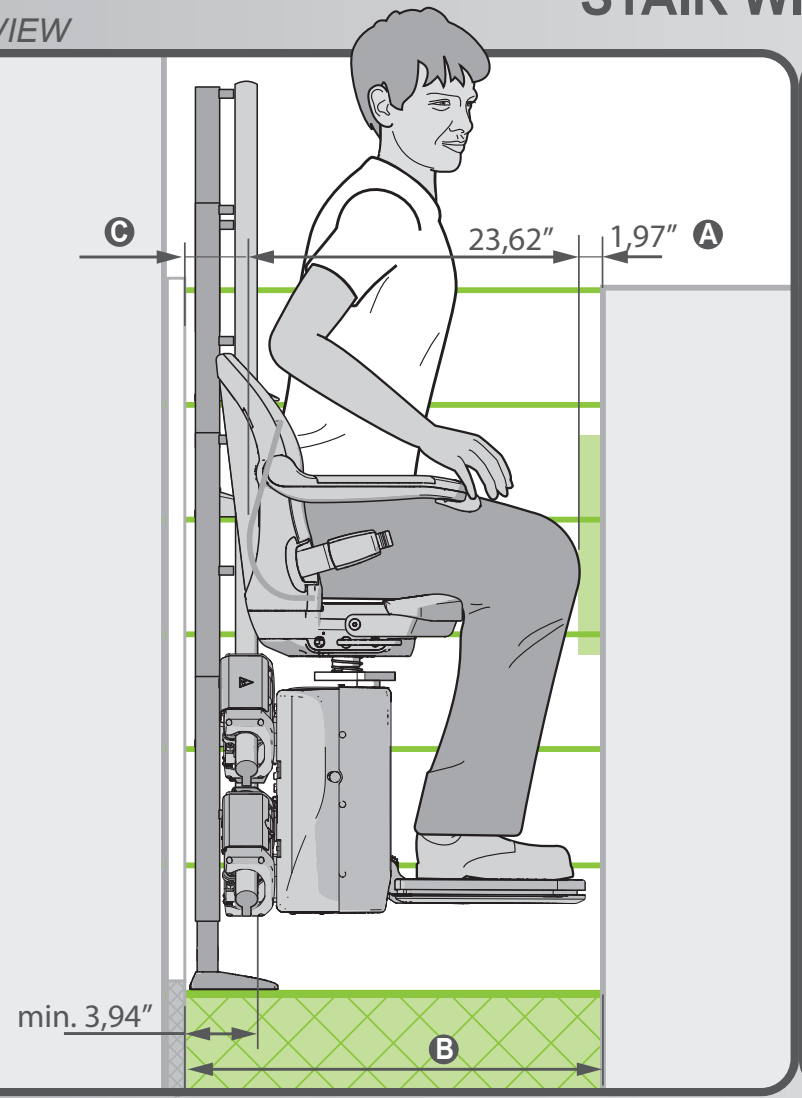

TOP VIEW

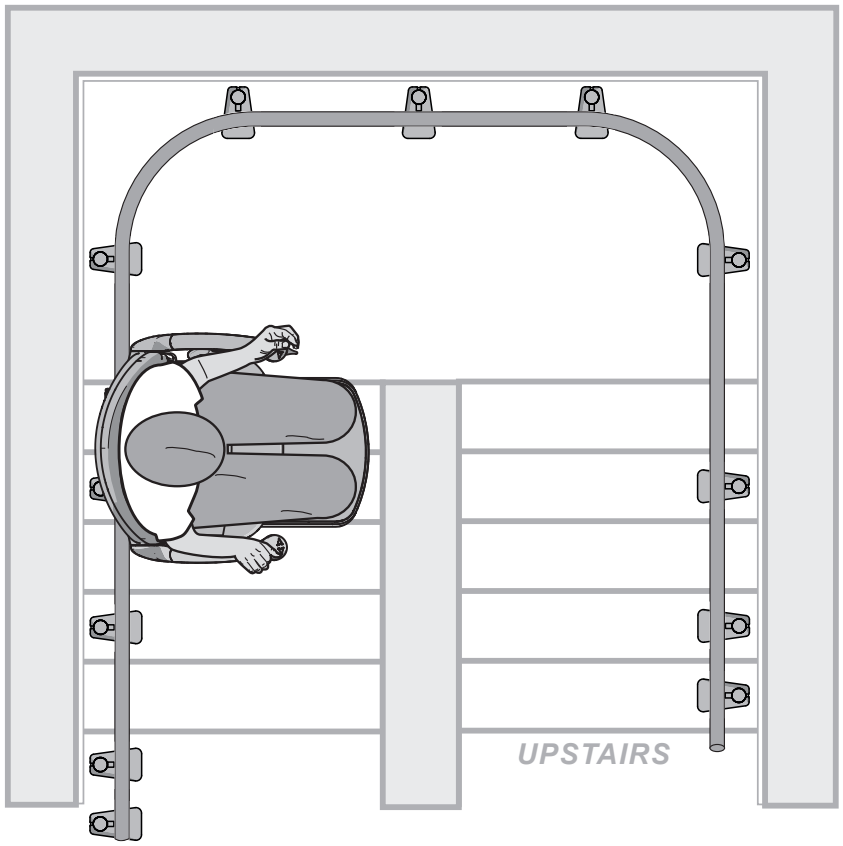

Ⓐ 50mm is the recommended knee clearance to the opposite wall

Ⓑ **Simplicity:** 29,21”
Style: 29,21”
Smart: 30,71”

Ⓒ Back of seat cushion used as reference point:
Simplicity: 3,62”
Style: 3,62”
Smart: 5,12”

home

handicare by Savaria®

STAIR WIDTH_*obstacle*

SIDE VIEW

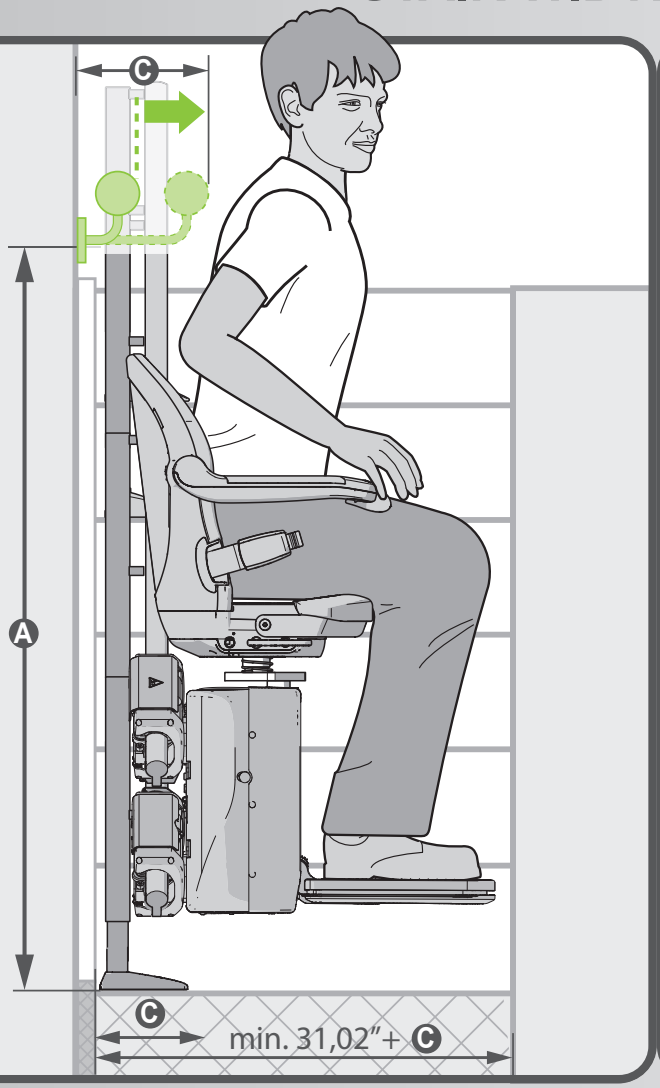

TOP VIEW

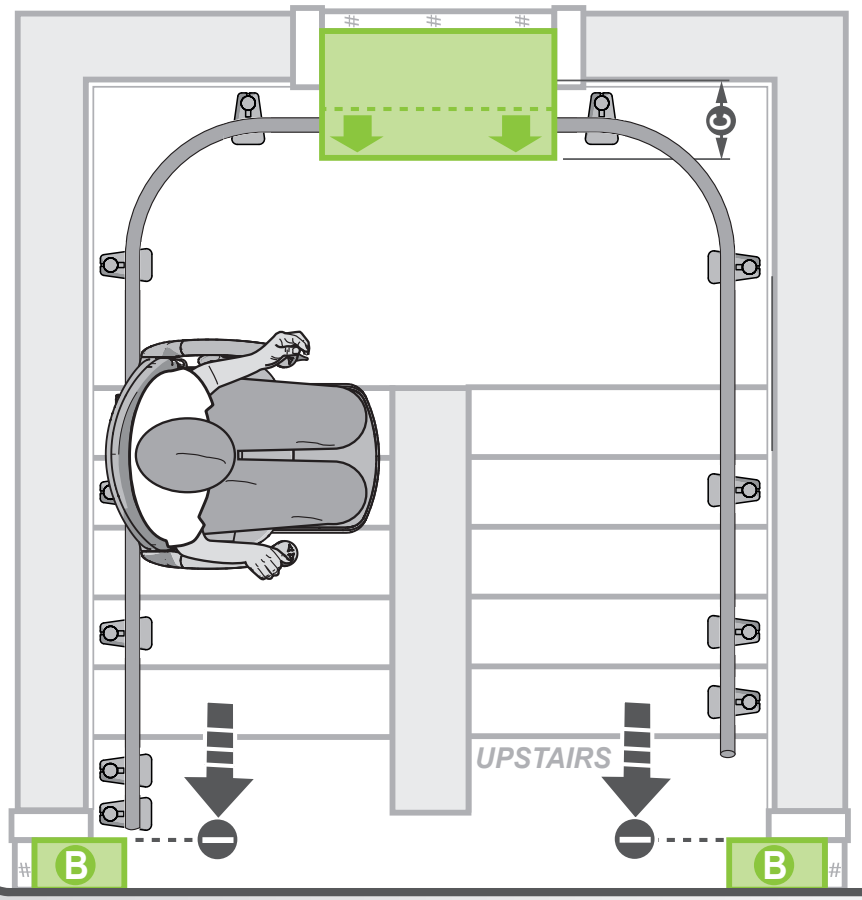

Ⓐ Obstacles shall always be measured.
Ⓑ The stairlift needs to stop before reaching an obstacle; adjust rail endings if necessary.
Ⓒ Offset rail by length C from stringer if obstacle is present.

If handrail is removed and the dado-rail remains, don't forget to measure this.
If you don't mark obstacles like window sills, door handles, paintings, radiators etc, we will not consider them.

home

handicare by Savaria®

STAIR WIDTH INNER SIDE_*Standard*

TOP VIEW

Stair type: **C** / **D** / **F**

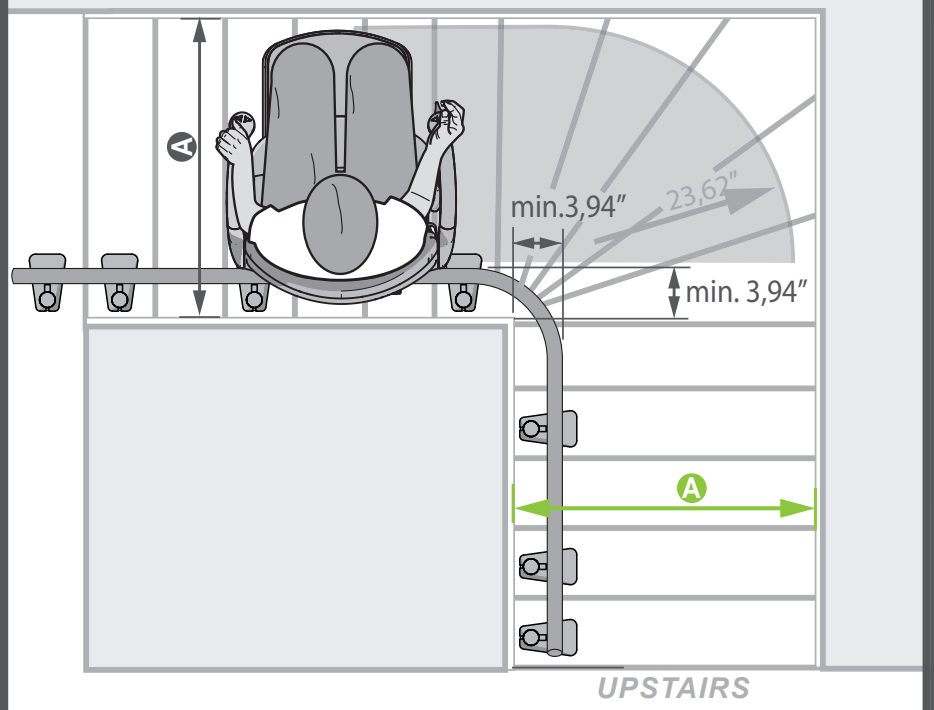

TOP VIEW

Stair type: **E**

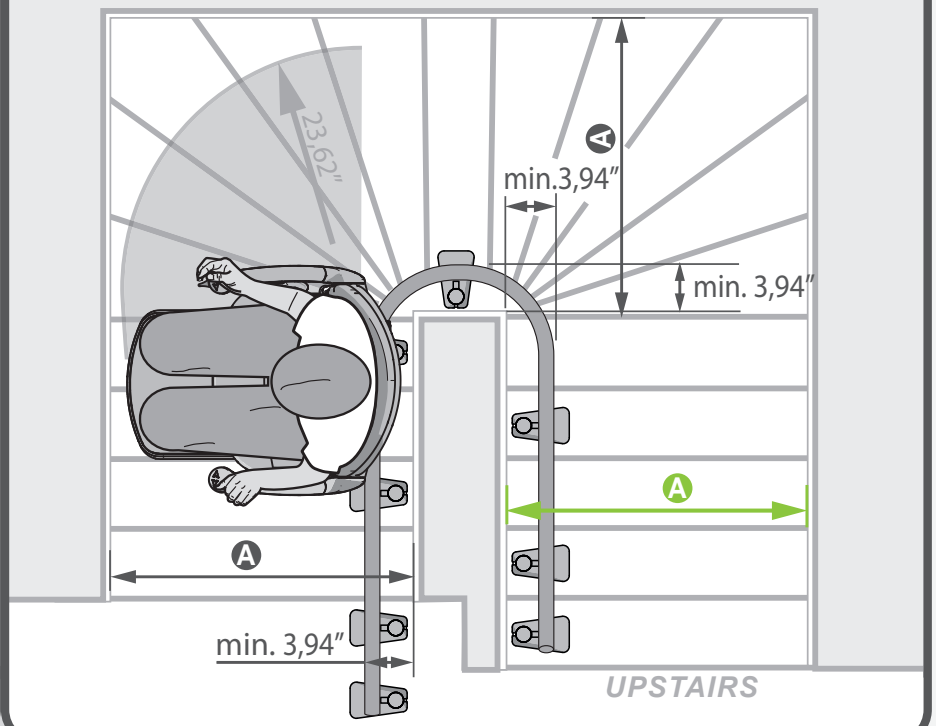

Ⓐ Because the footrest and the armrest are swinging out in the corners:

Simplicity:	29,21"
Style:	29,21"
Smart:	30,71"

Maximum helix inclination is 54 degrees.

home

handicare by Savaria®

STAIR WIDTH INNER SIDE_*Landing*

TOP VIEW

Stair type: G



TOP VIEW

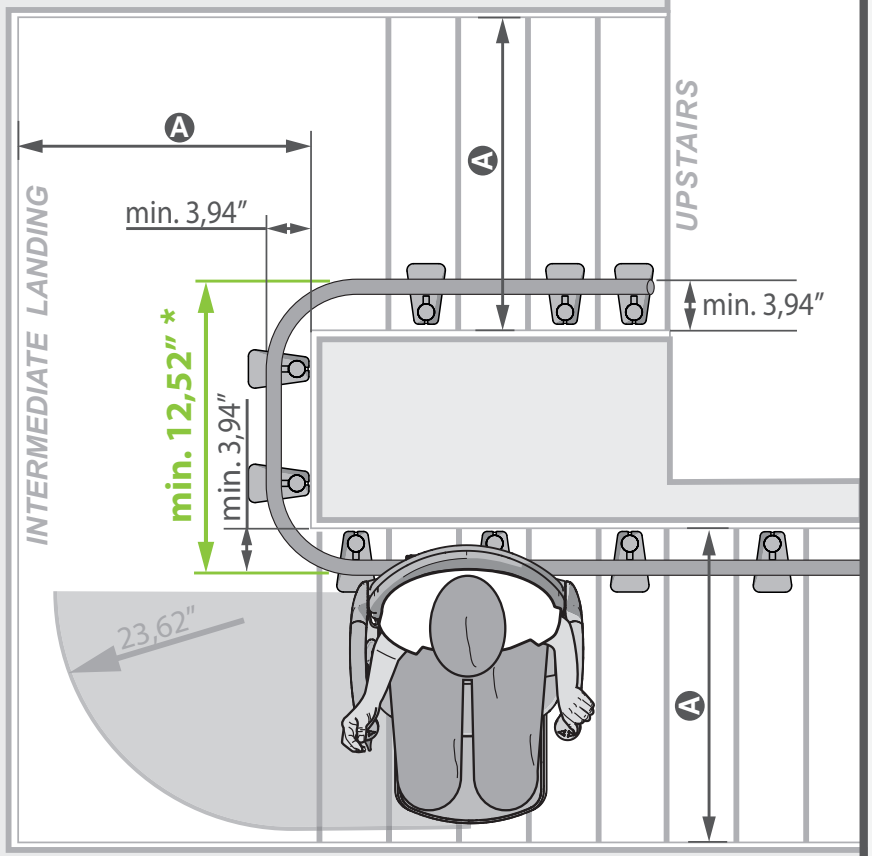

* 12,52" with continuous radius 14,69" with straight in-between
Measurements from centre of track

Ⓐ Because the footrest and armrest are swinging out in the corners:

Simplicity:	29,21"
Style:	29,21"
Smart:	30,71"

Maximum helix inclination is 54 degrees.

home

handicare by Savaria®



Turning space

TURNING CLEARANCE_*user*

TOP VIEW

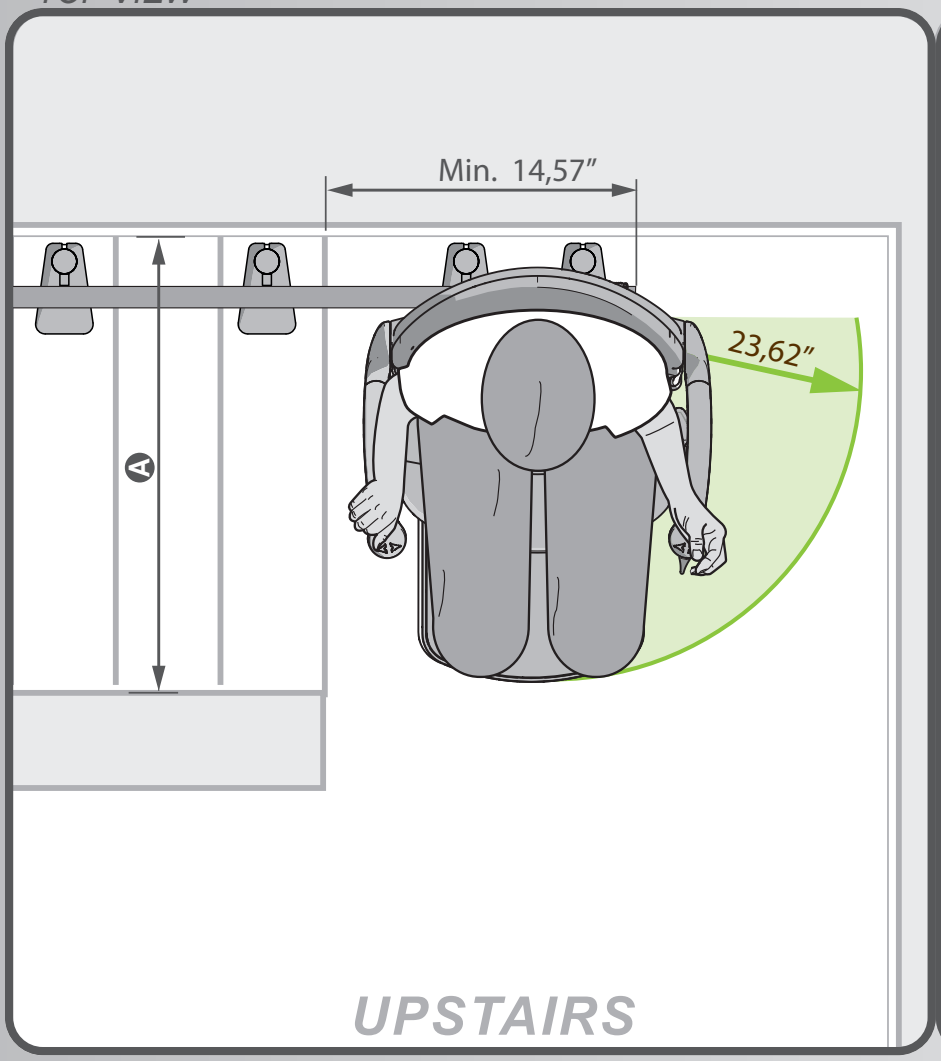

UPSTAIRS

TOP VIEW

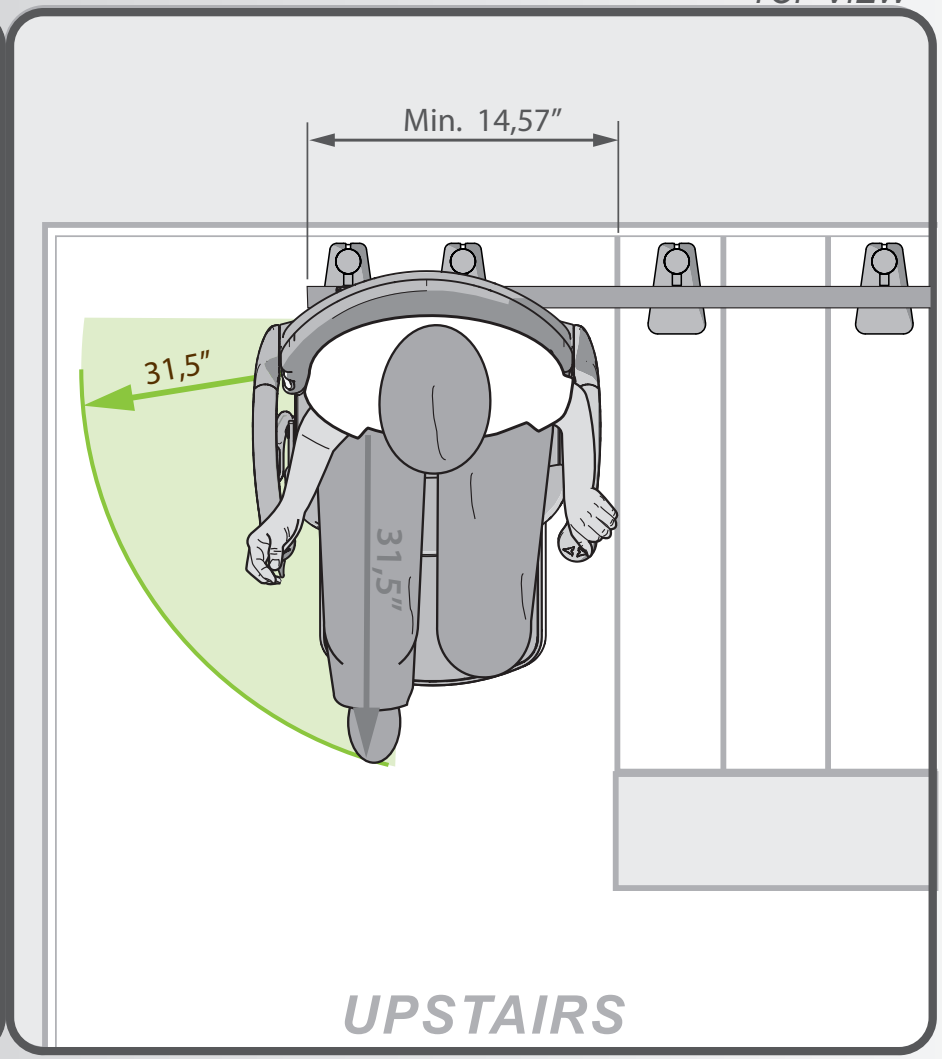

UPSTAIRS

Ⓐ **Simplicity:** 29,21”
Style: 29,21”
Smart: 30,71”

If knees go beyond footplate at seated position the overrun needs to be longer for free swiveling.

TURNING CLEARANCE_*seat*

TOP VIEW

Smart

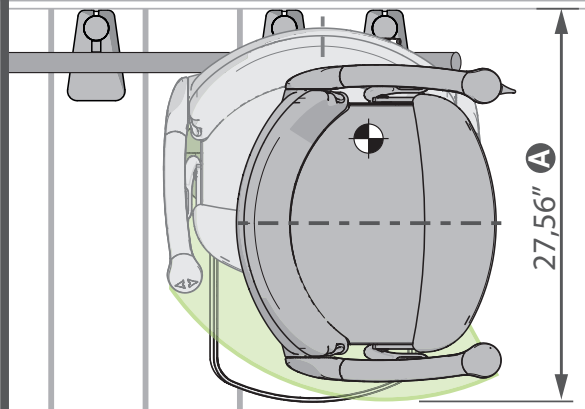

Simplicity

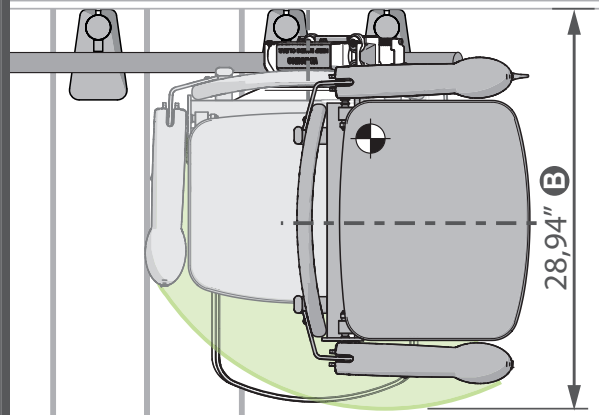

TOP VIEW

Style

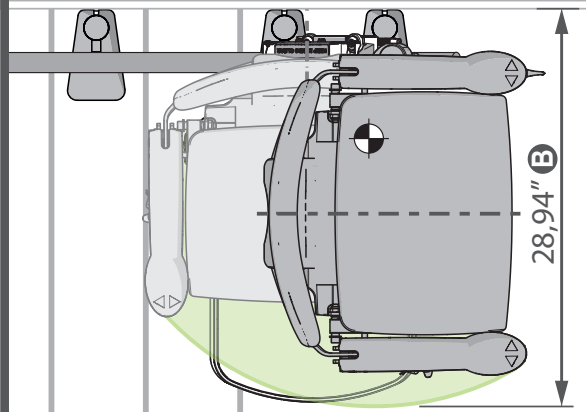

Ⓐ With armspacers: 28,54”. With double armspacers: 29,53”.

Ⓑ With short arm: 27,56”.

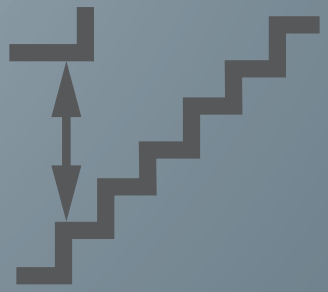

Bulkhead

OVERHEAD CLEARANCE

SIDE VIEW

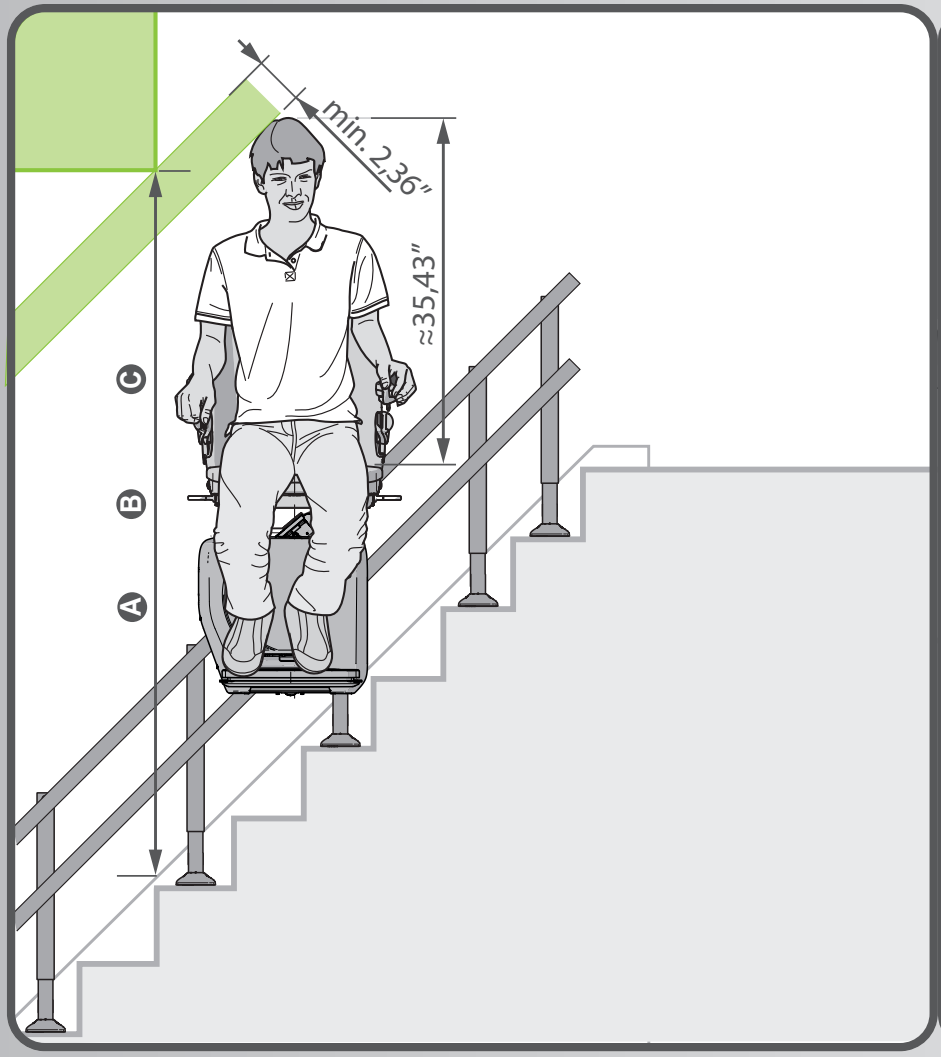

TOP VIEW

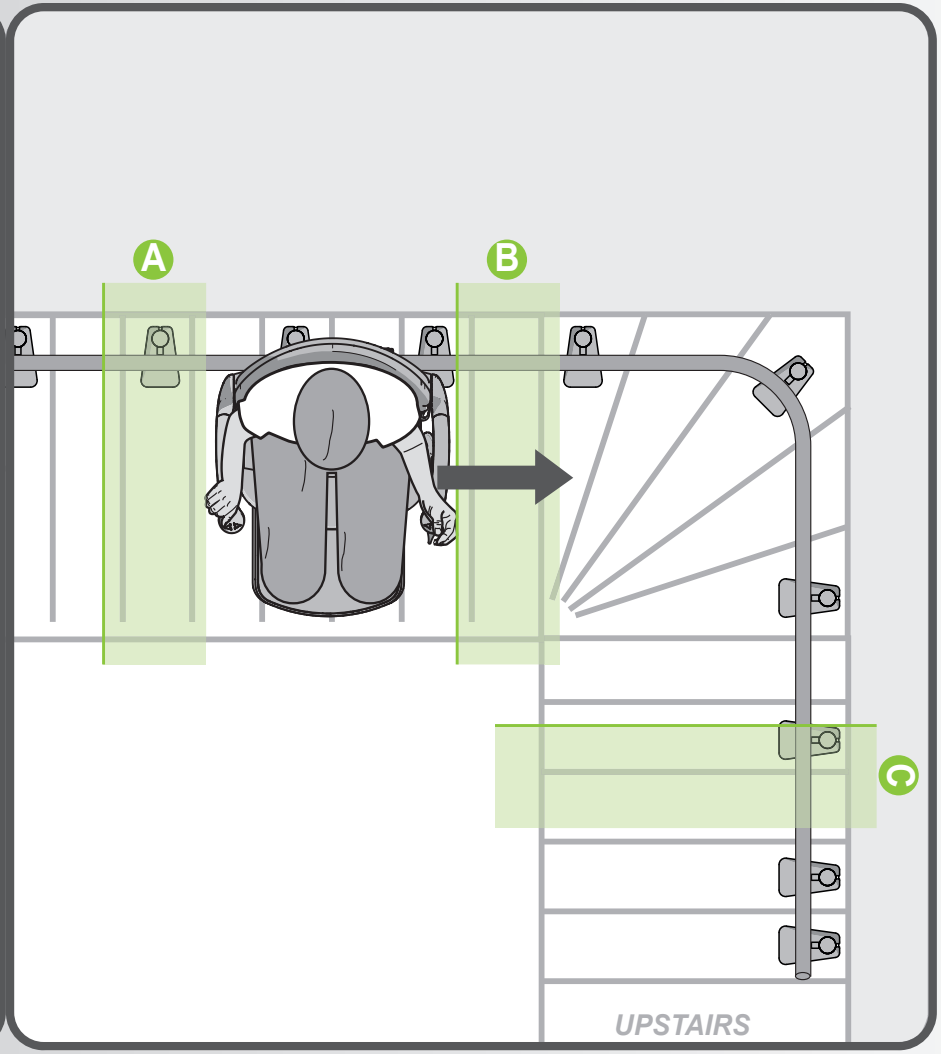

The needed headroom clearance is dependant on the inclination of the stairs and the configuration of the steps.
We can give you an exact measurement with a feasibility drawing, but a minimum distance of at least 72,83” between bulkhead and step is required, with the seat in its lowest position.
Dimensions Ⓐ / Ⓑ / Ⓒ are also depending on the position the seat stem mounted in the chassis.

home

handicare by Savaria®

The measurements given are theoretical, might differ in practice due to flexibility in the system.



Downstairs

STANDARD

SIDE VIEW

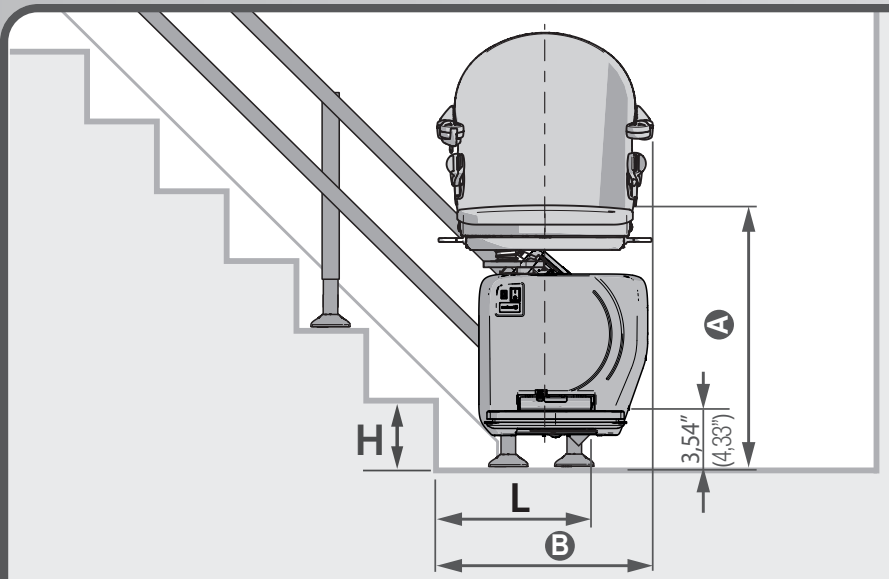

TOP VIEW

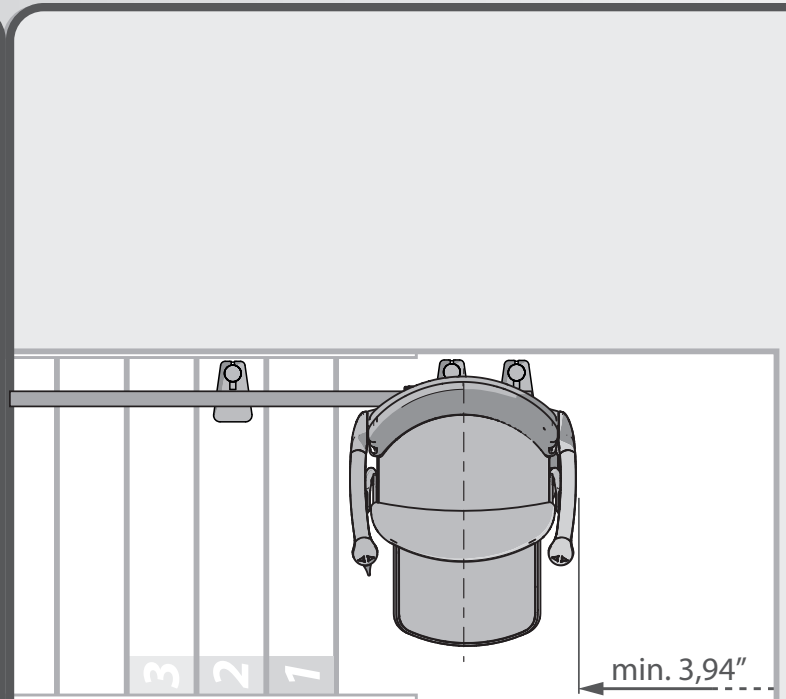

With **H= 7,09" and L= 19,69"**

Ⓐ Distance from Floor to Seat Cushion:

Simplicity:	22,05 - 25,2"
Style:	22,05 - 25,2"
Smart:	22,83 - 26,77"

Value shown in brackets are when footplate is set in higher position.

Ⓑ (Typical at 45° stairs)

Simplicity:	28,35"
Style:	28,35"
Smart:	25,98"

The measurements given are theoretical, might differ in practice due to flexibility in the system.

SHORT RAILENDING

SIDE VIEW

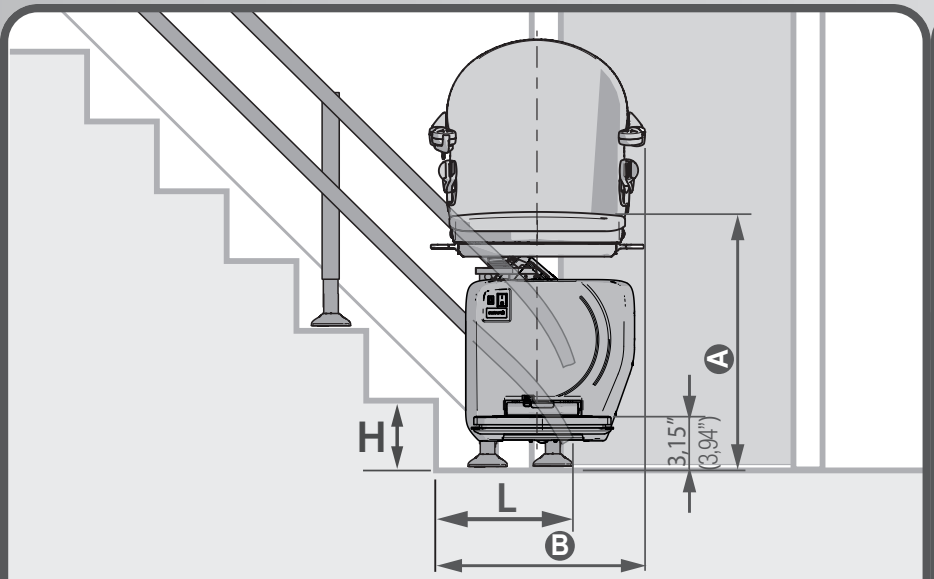

With **H= 7,09" and L= 16,54"**

TOP VIEW

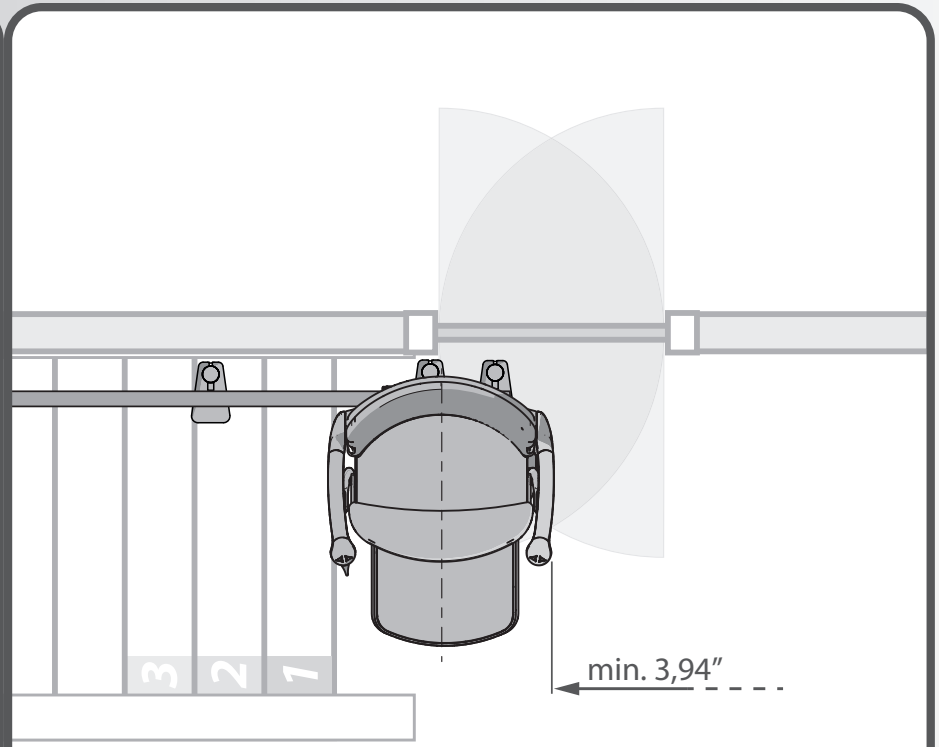

Ⓐ Distance from Floor to Seat Cushion:

Simplicity:	21,65 - 24,8"
Style:	21,65 - 24,8"
Smart:	22,44" - 26,38"

Value shown in brackets are when footplate is set in higher position.

Ⓑ (55° Railending)

Simplicity:	25"
Style:	25"
Smart:	22,64"

SHORT RAILENDING_+*guard*

SIDE VIEW

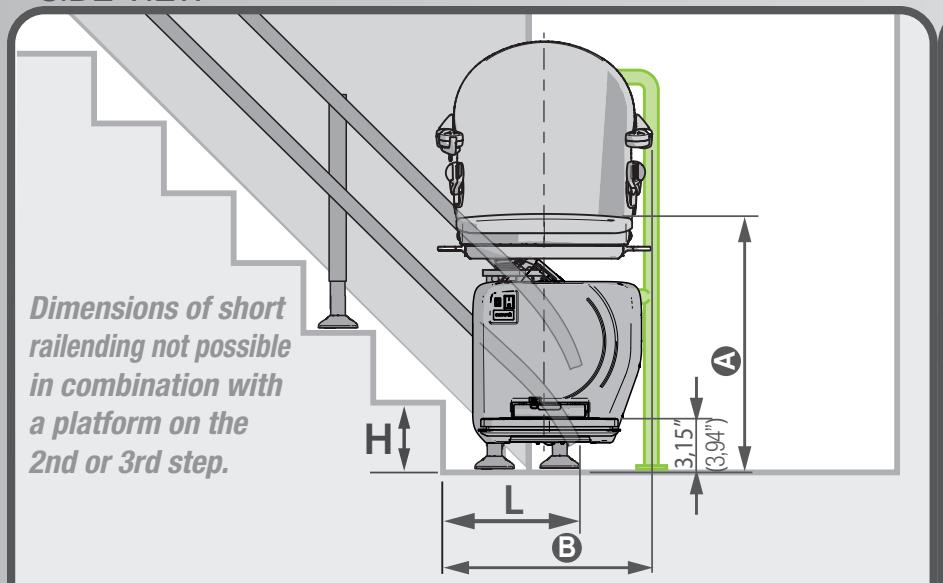

Dimensions of short railending not possible in combination with a platform on the 2nd or 3rd step.

With **H= 7,09" and L= 16,54"**

TOP VIEW

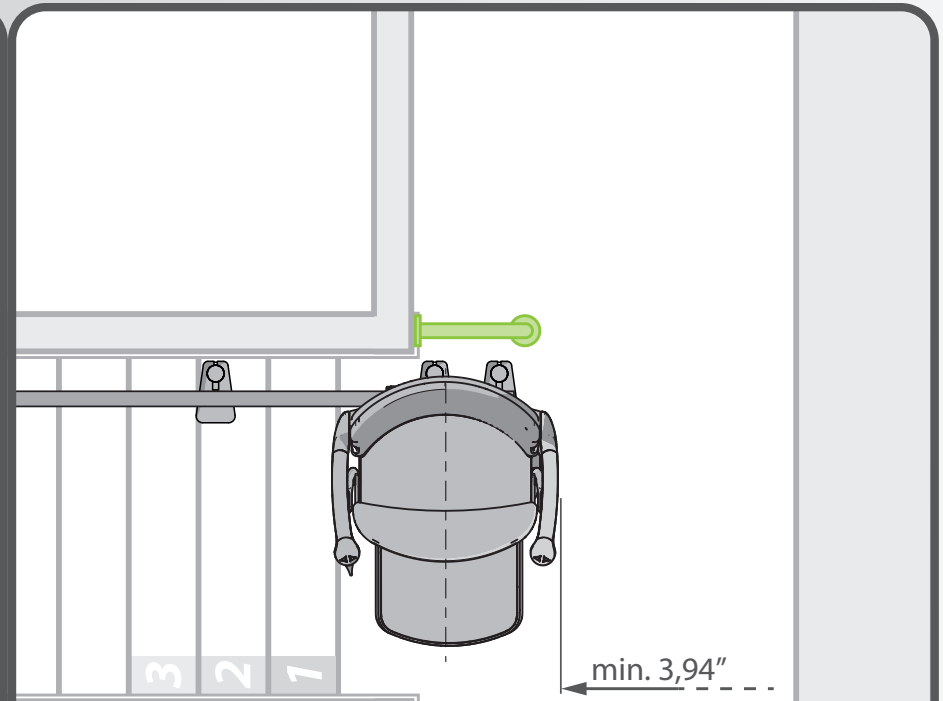

Ⓐ Distance from Floor to Seat Cushion:

Simplicity:	21,65 - 24,8"
Style:	21,65 - 24,8"
Smart:	22,44 - 26,38"

Ⓑ (55° Railending)

Simplicity:	25"
Style:	25"
Smart:	22,64"

Value shown in brackets are when footplate is set in higher position.

Guards available in following dimensions
Guard Rail - Small (3,94x27,56")
Guard Rail - Regular (5,91"x31,5")
Guard Rail -Larger (7,87x35,43")

The measurements given are theoretical, might differ in practice due to flexibility in the system.

HINGE_*outer side*

SIDE VIEW

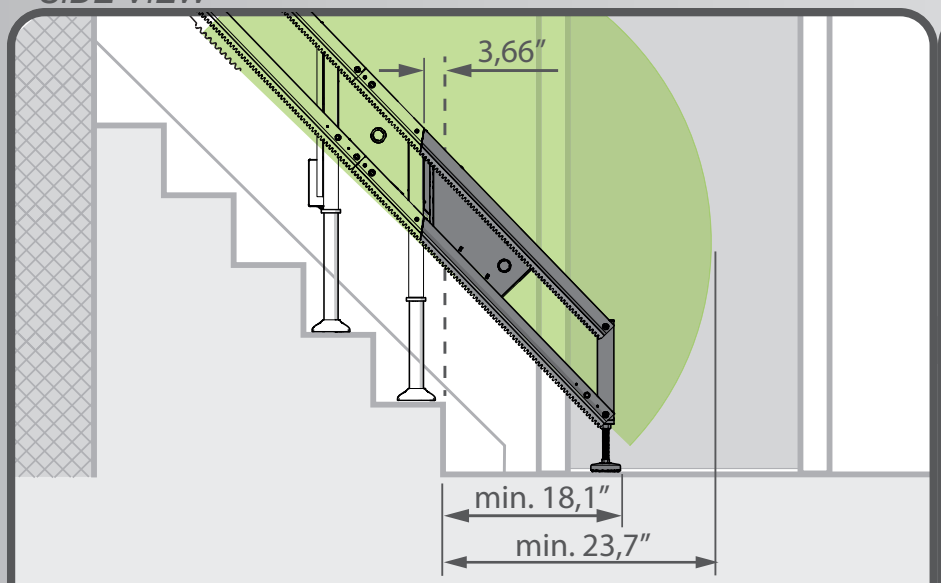

Ⓐ Standard corner

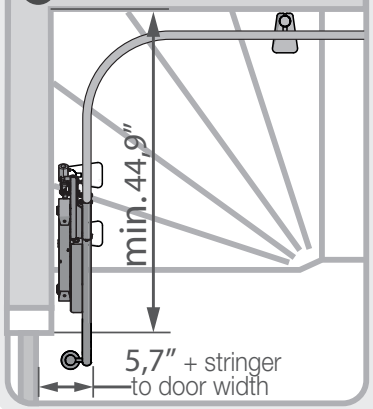

TOP VIEW

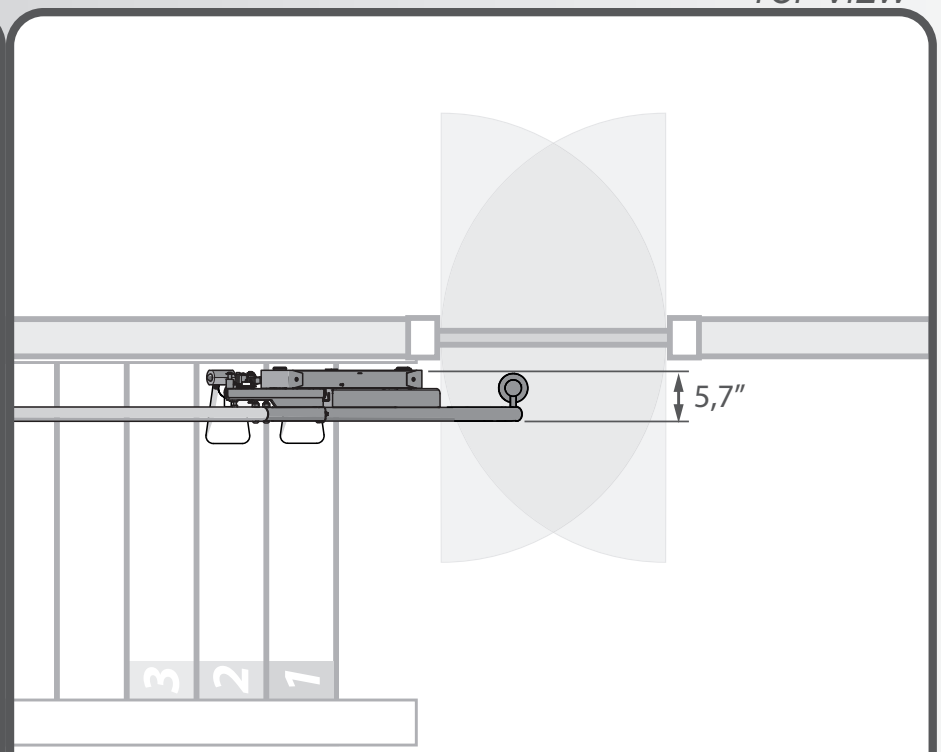

Ⓐ When horizontal wall length is 42,5″, the rail will stick 2,4″ in front of the nose of the first step when in folded position.

Hinge rail is at 46°.

home

DOWNSTAIRS

STANDARD

SHORT RAILEND

SHORT R_*+guard*

HINGE_*Outer side*

HORIZONTAL

90° PARK_*St.*

90° PARK_*Hor.*

180° PARK_*St.*

180° PARK_*Hor.*

handicare by Savaria®

HORIZONTAL

SIDE VIEW

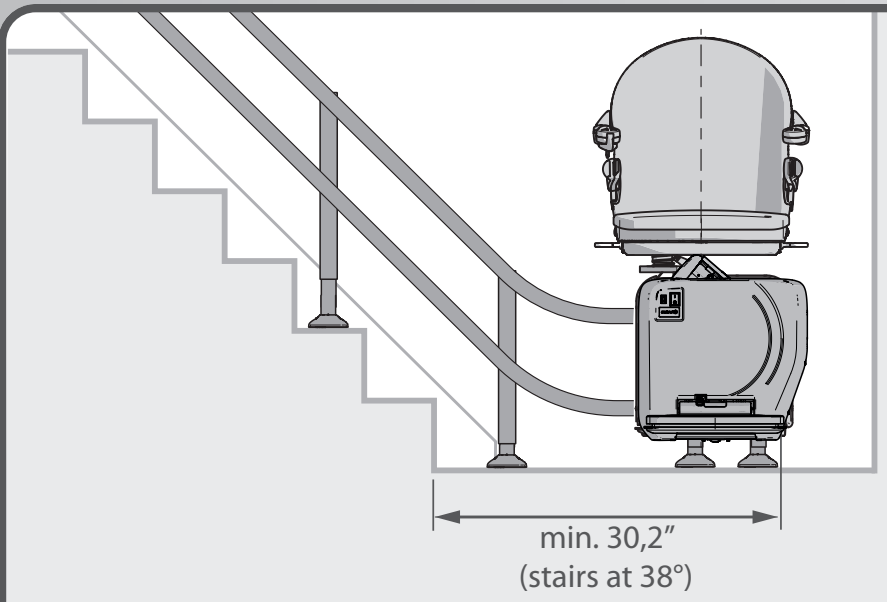

TOP VIEW

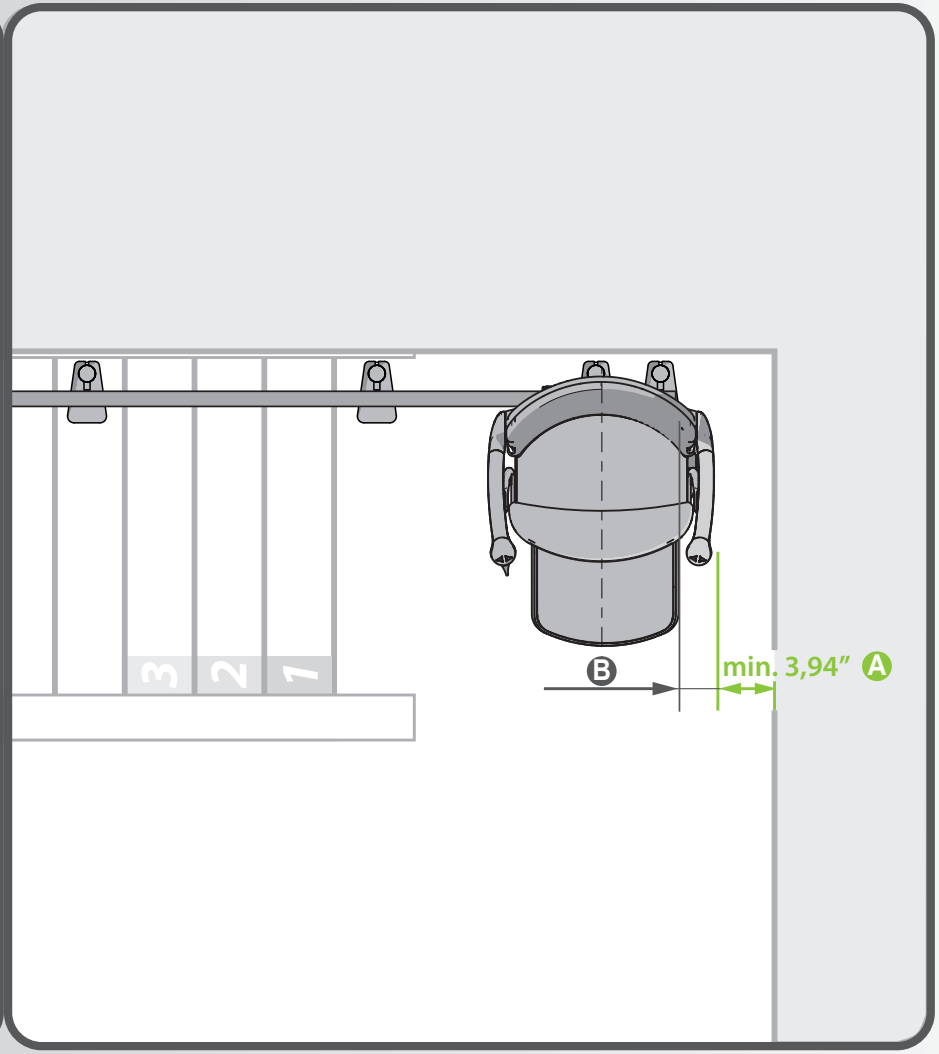

Ⓐ To prevent the underarm from getting squeezed between the armrest and the opposite wall.

Ⓑ Style: 7,87”
Simplicity: 7,87”
Smart: 10,12”

home

handicare by Savaria®

90° PARK INSIDE_*standard*

SIDE VIEW

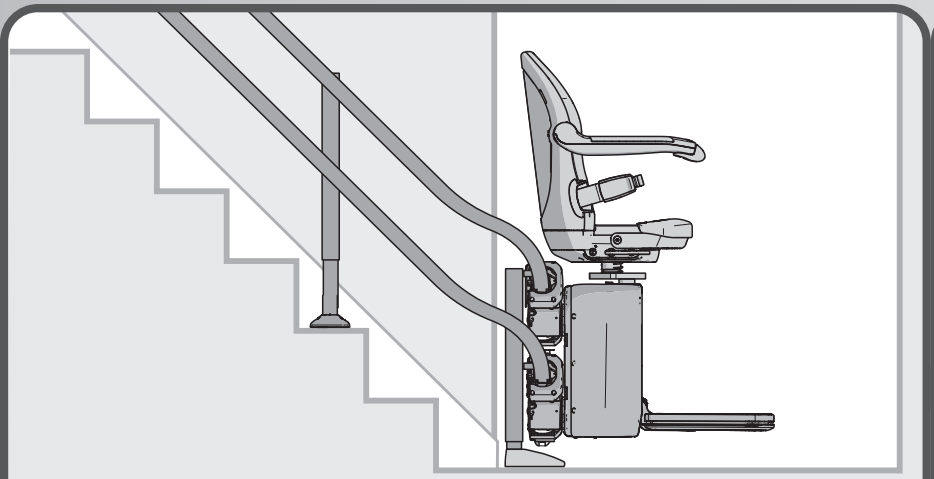

TOP VIEW

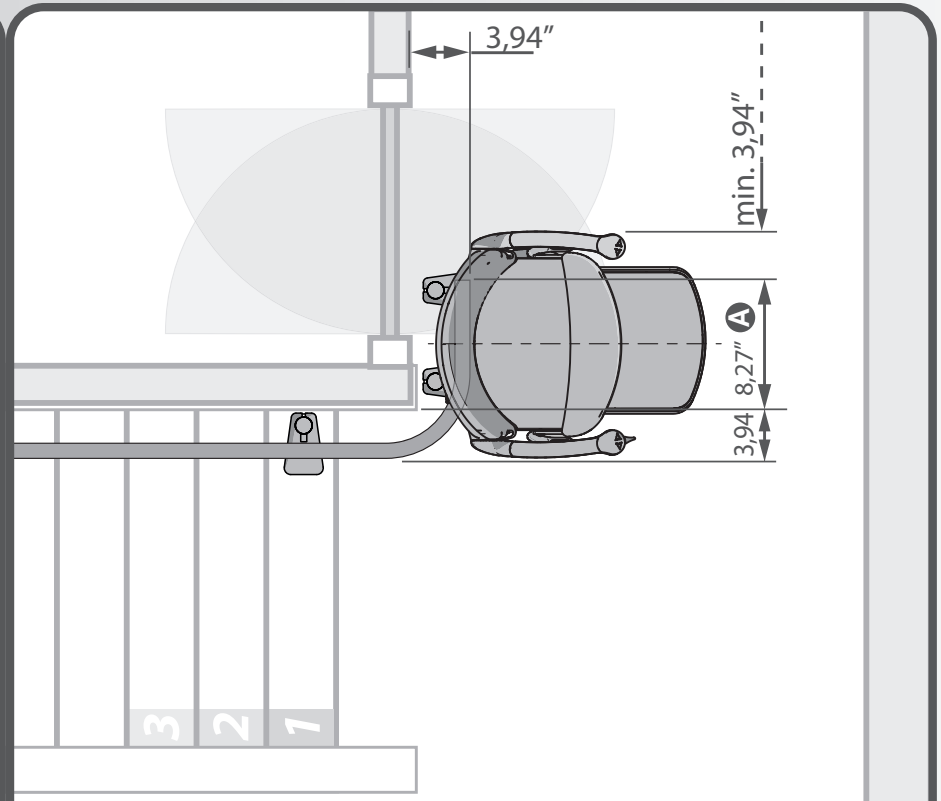

Ⓐ Size necessary to have the chair in line with the wall.

home

DOWNSTAIRS

STANDARD

SHORT RAILEND

SHORT R_*+guard*

HINGE_*Outer side*

HORIZONTAL

90° PARK_*St.*

90° PARK_*Hor.*

180° PARK_*St.*

180° PARK_*Hor.*

handicare by Savaria®

The measurements given are theoretical, might differ in practice due to flexibility in the system.

90° PARK INSIDE_*horizontal*

SIDE VIEW

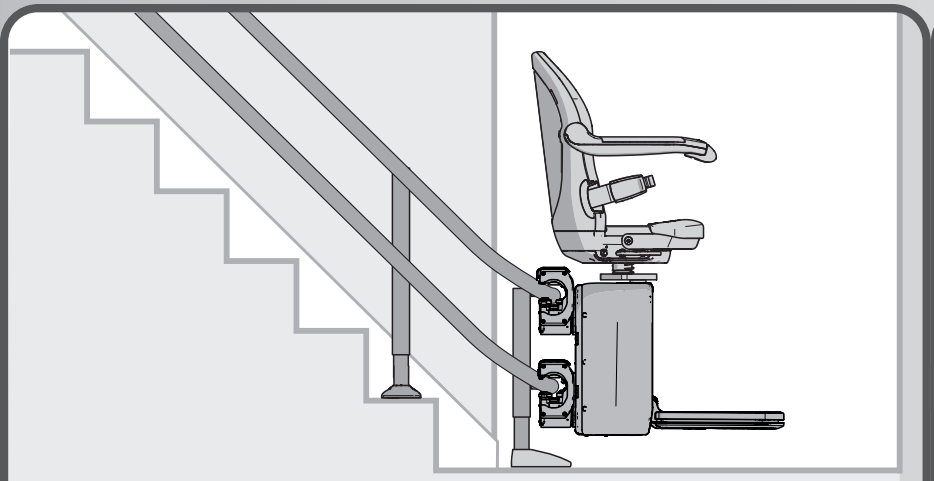

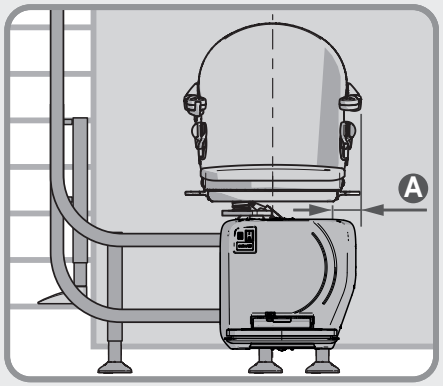

TOP VIEW

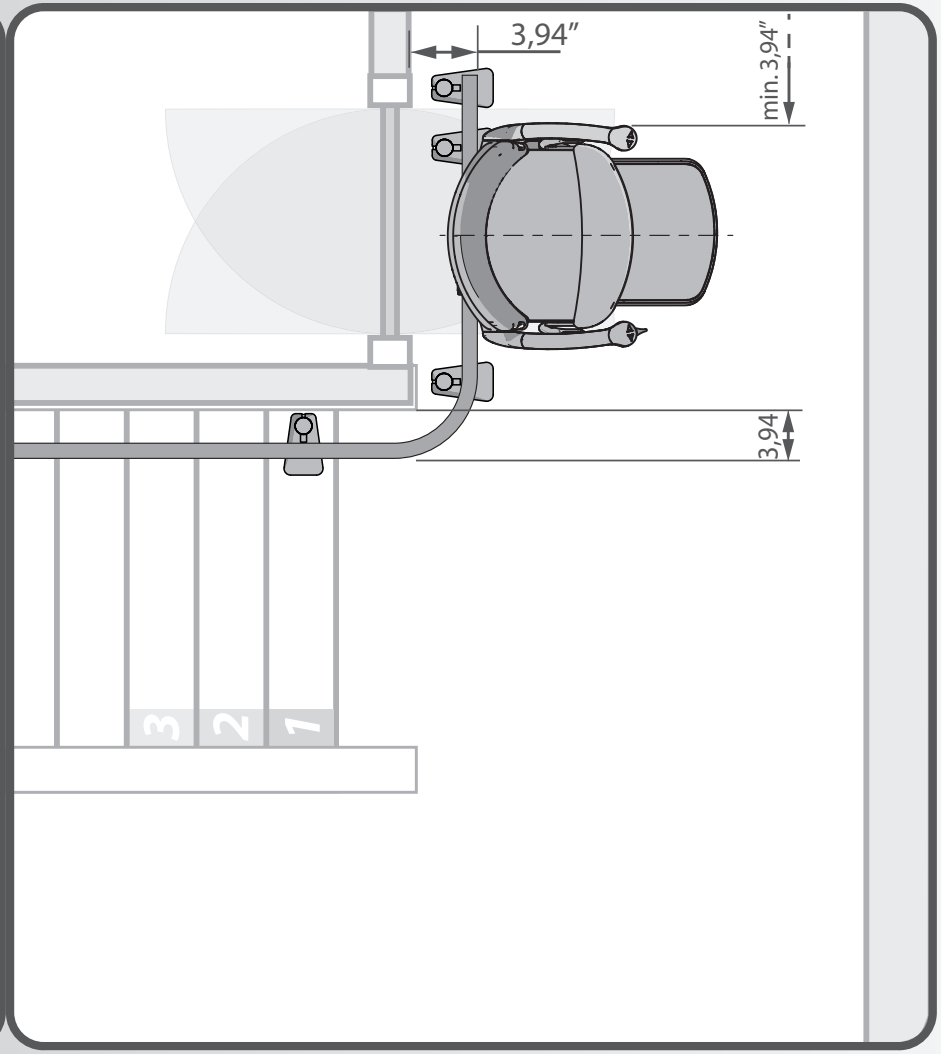

Ⓐ Style: 7,87”
Simplicity: 7,87”
Smart: 10,12”

home

handicare by Savaria®

The measurements given are theoretical, might differ in practice due to flexibility in the system.

180° PARK INSIDE_*standard*

SIDE VIEW

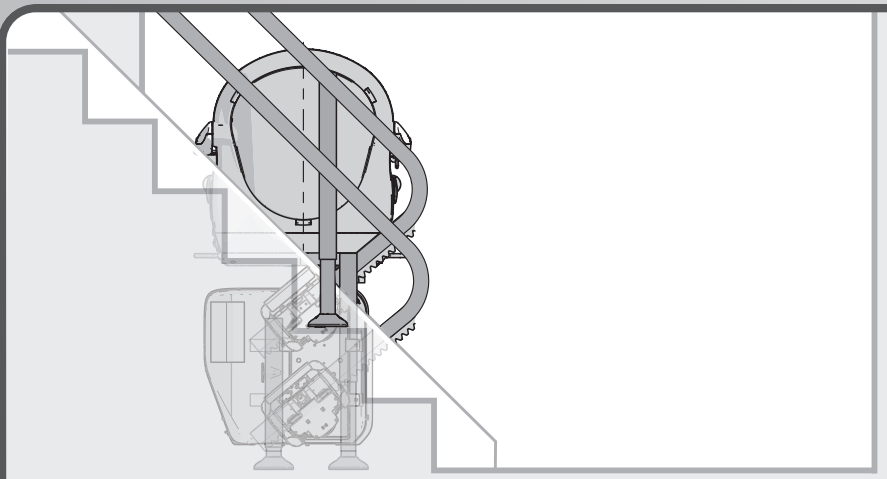

TOP VIEW

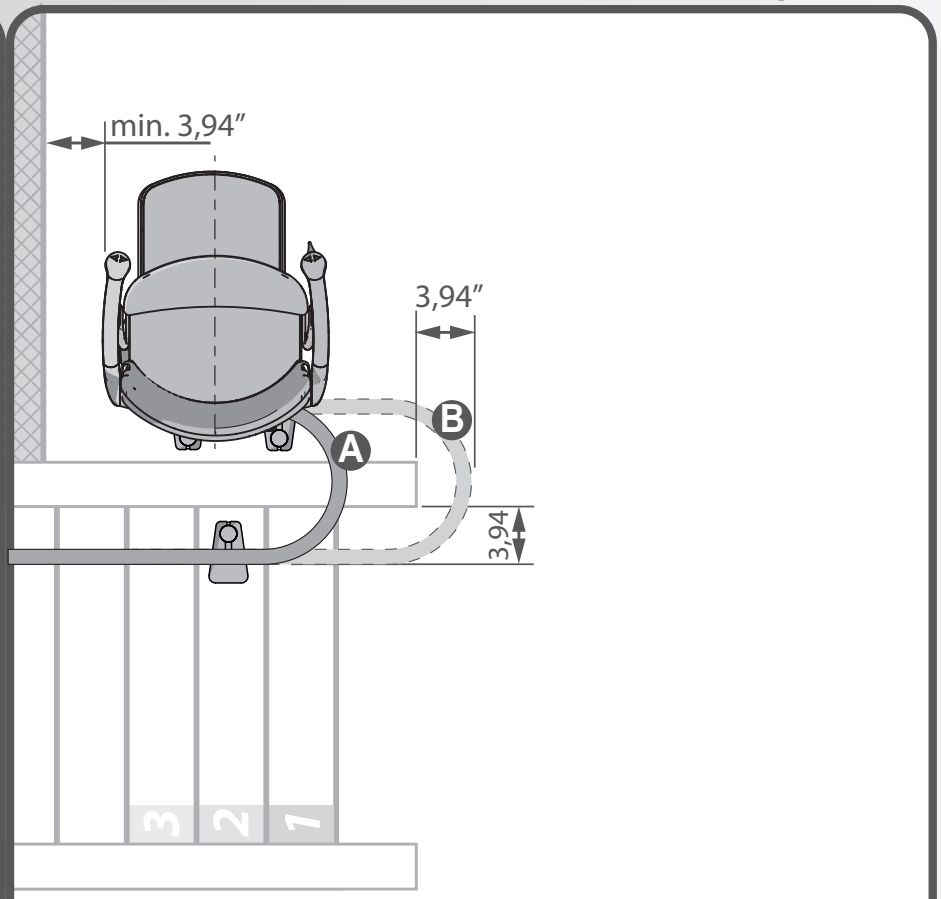

Ⓐ Rail over stringer (if the rail goes over the stringer, don’t forget to measure the stringer with obstacle markers).
Ⓑ Rail around wall.

home

handicare by Savaria®

The measurements given are theoretical, might differ in practice due to flexibility in the system.

180° PARK INSIDE_*horizontal*

SIDE VIEW

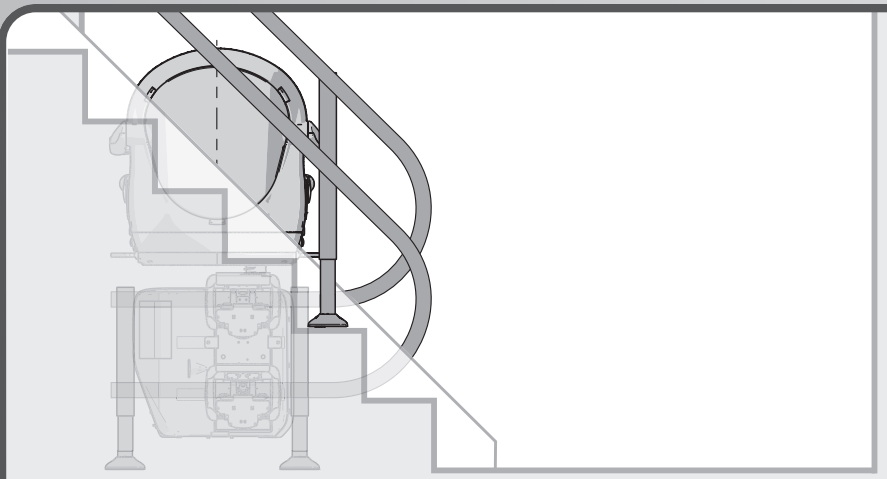

TOP VIEW

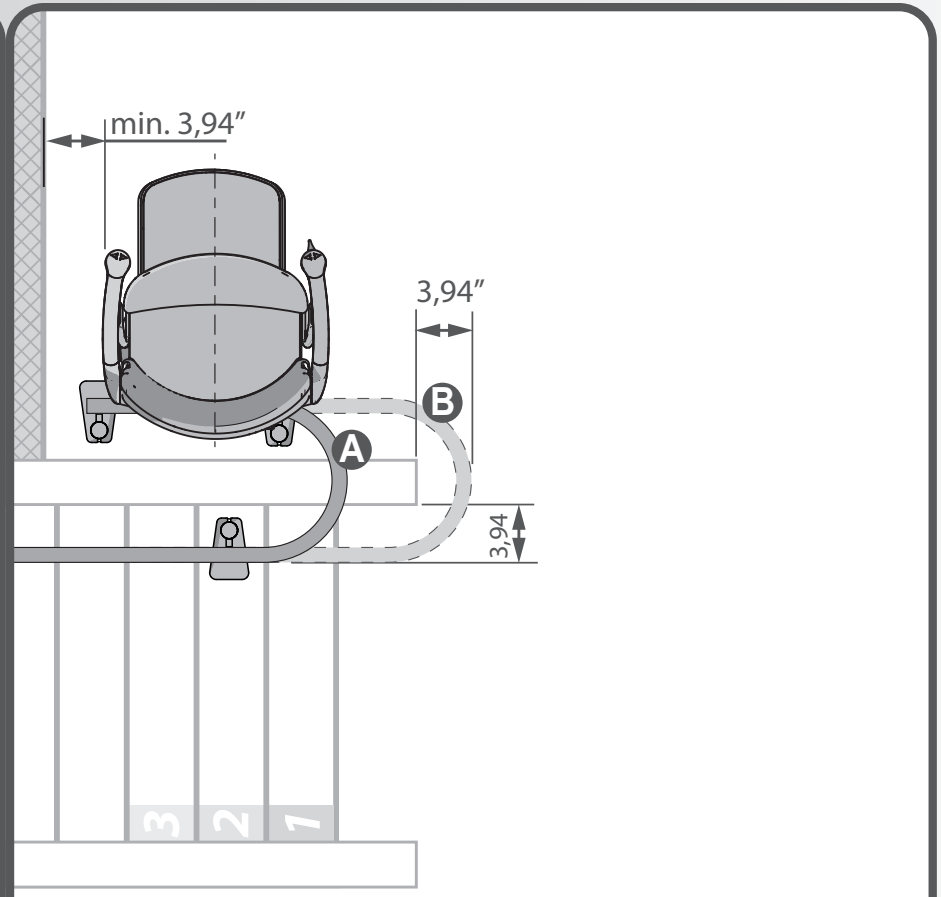

Ⓐ Rail over stringer (if the rail goes over the stringer, don't forget to measure the stringer with obstacle markers).

Ⓑ Rail around wall.

home

DOWNSTAIRS

STANDARD

SHORT RAILEND

SHORT R_*+guard*

HINGE_*Outer side*

HORIZONTAL

90° PARK_*St.*

90° PARK_*Hor.*

180° PARK_*St.*

180° PARK_*Hor.*

handicare by Savaria®

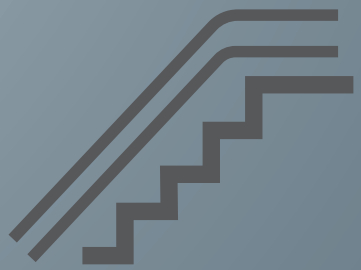

Upstairs

HORIZONTAL OVERRUN

SIDE VIEW

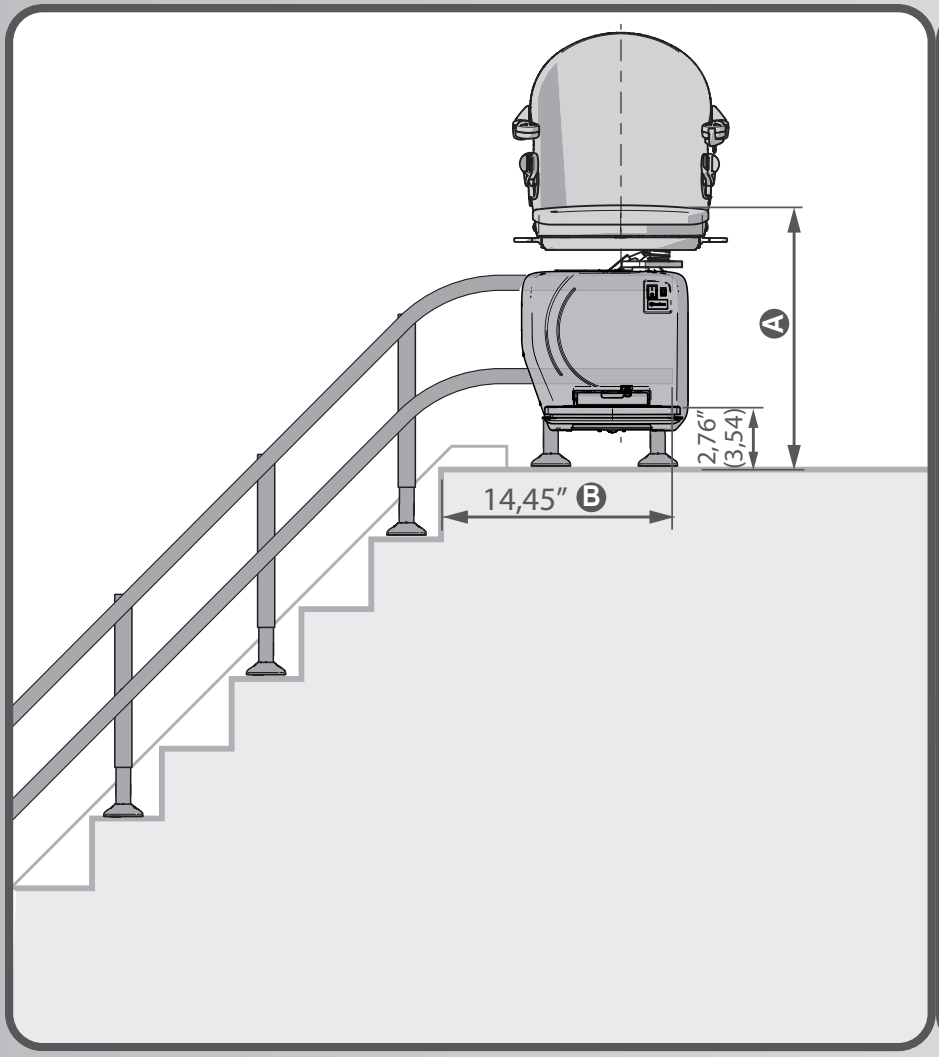

TOP VIEW

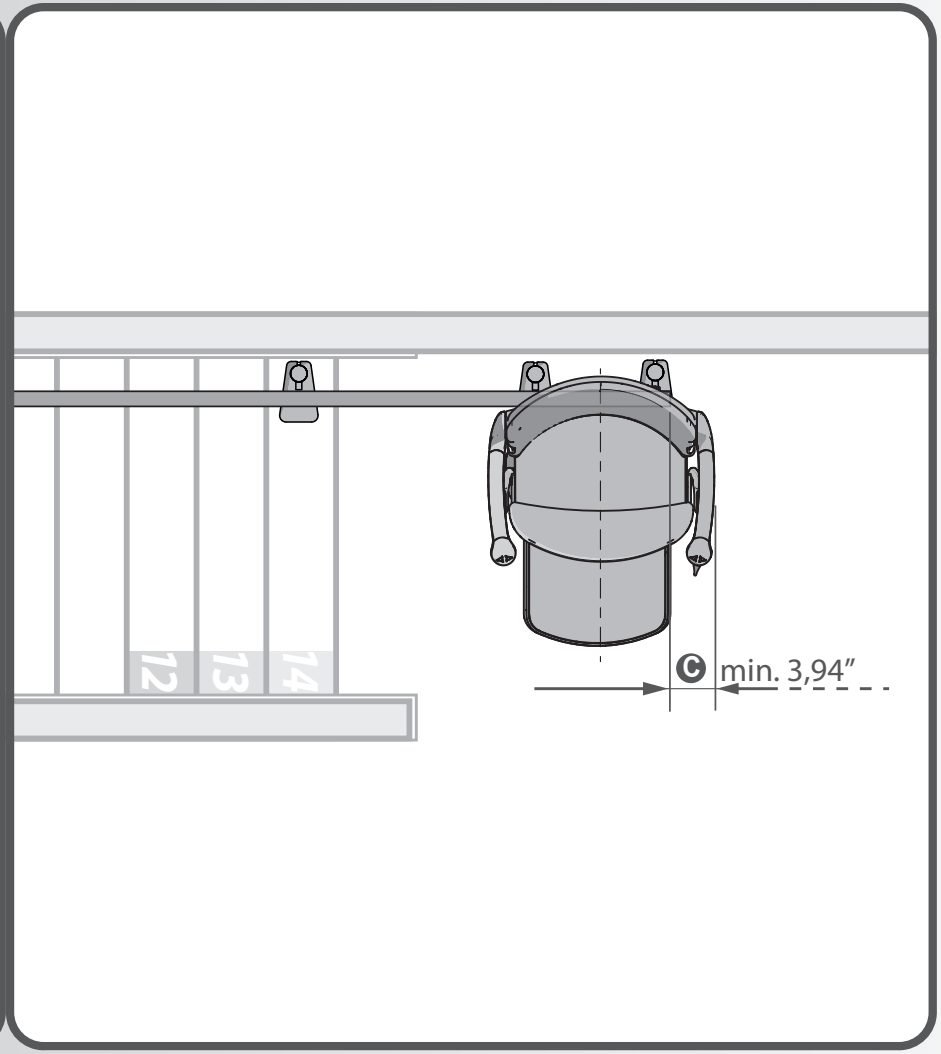

A Distance from Floor to Seat Cushion:

Simplicity:	21,26 - 24,41"
Style:	21,26 - 24,41"
Smart:	22,05 - 25,98"

Value shown in brackets are when footplate is set in higher position.

B 14,45" is recommended. Shorter or longer is possible. When shorter the chair needs to be swivelled before getting on/off.

C

Simplicity:	3,7"
Style:	3,7"
Smart:	4,13"

FOOTREST ‘0’

SIDE VIEW

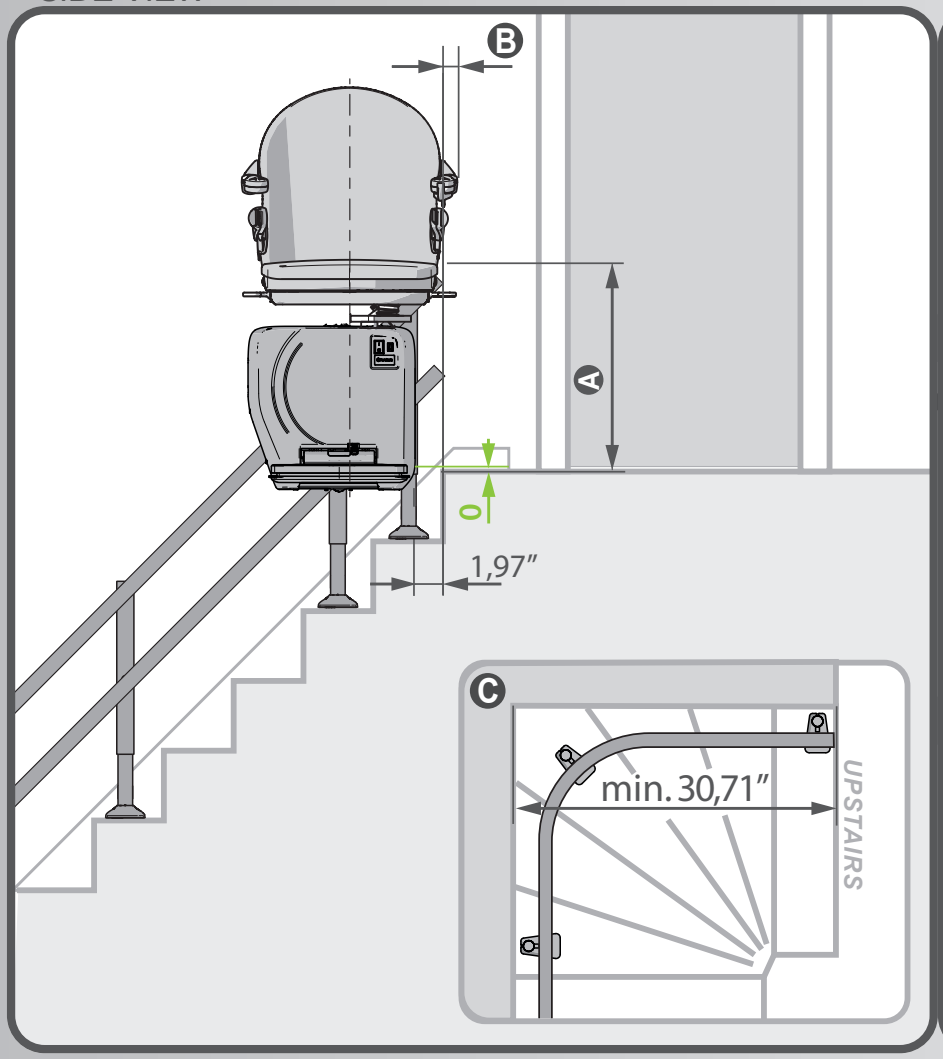

TOP VIEW

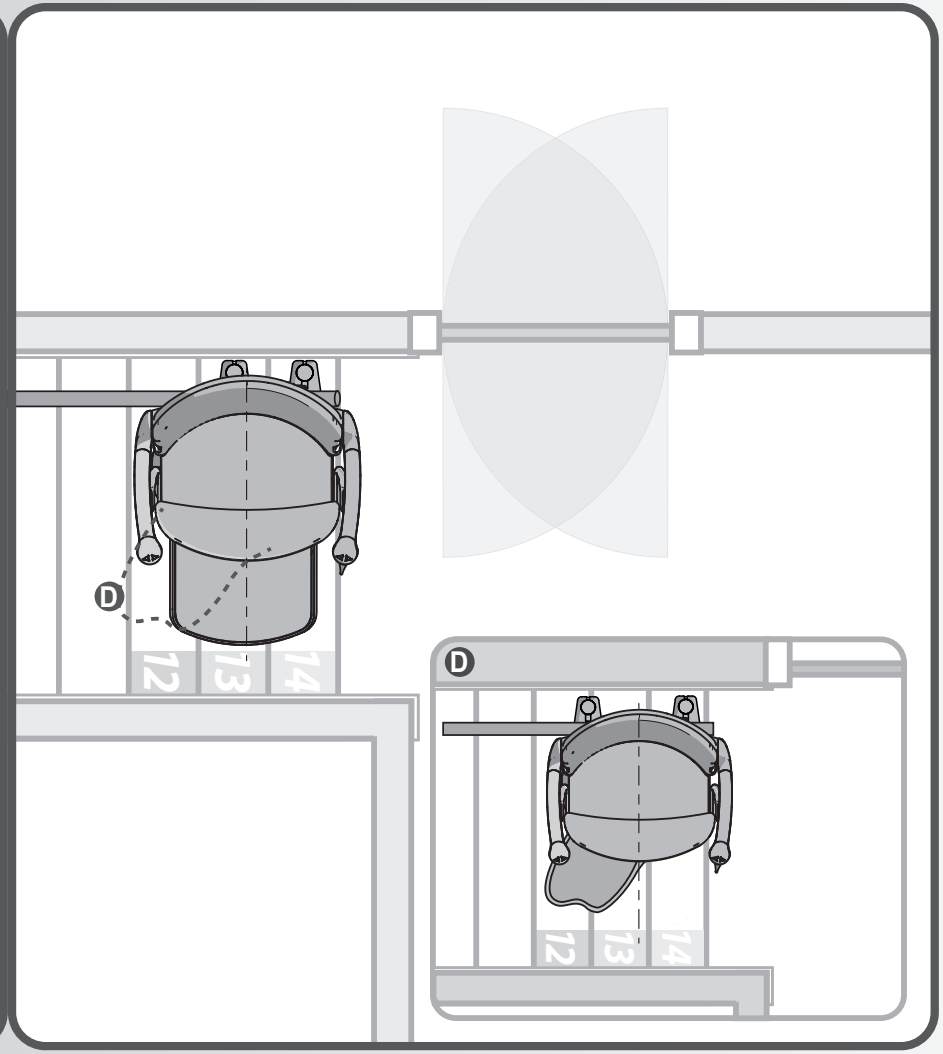

A	**Simplicity:**	18,5 - 21,65”	**B**	**Simplicity:**	6,46”
	Style:	18,5 - 21,65”		**Style:**	6,46”
	Smart:	19,29 - 23,23”		**Smart:**	6,89”

D Footrest level in combination with an extended footrest creates a large gap/tripping hazard.

STANDARD_+*guard*

SIDE VIEW

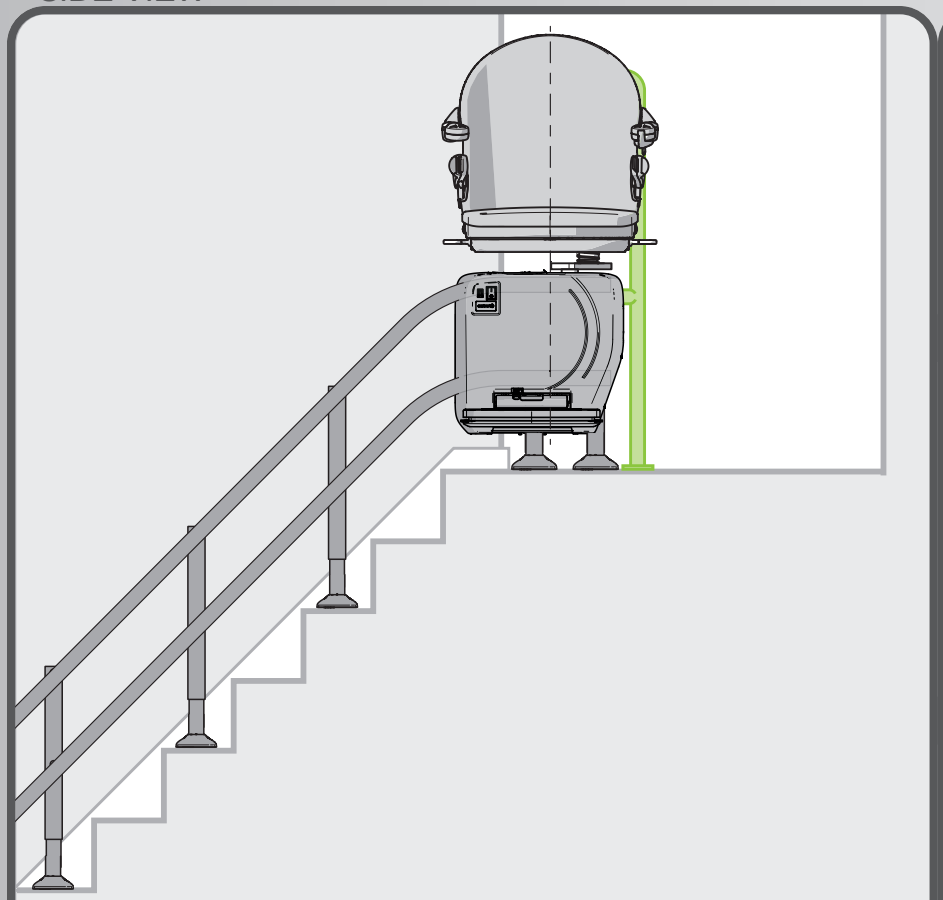

Guard to prevent stumbling over the rail

TOP VIEW

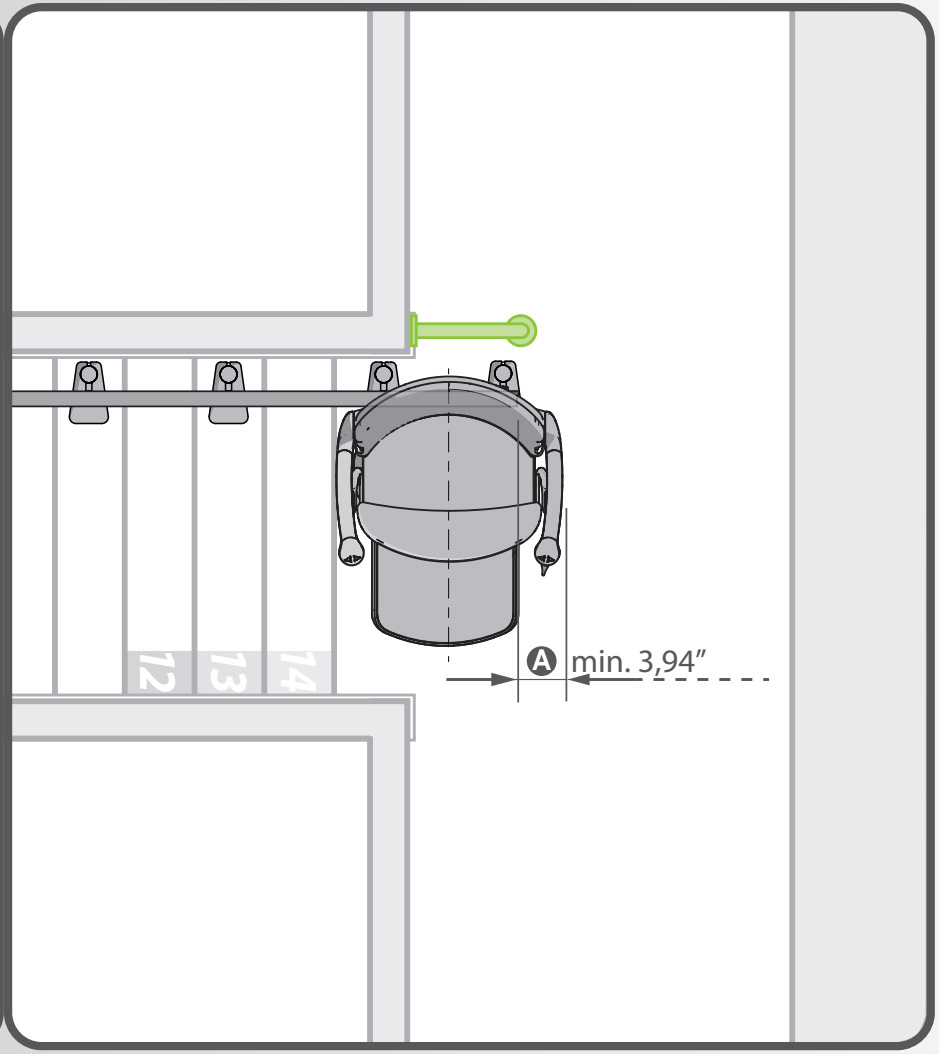

Guards available in following dimensions
Guard Rail - Small (3,94x27,56”)
Guard Rail - Regular (5,91x31,5”)
Guard Rail -Larger (7,87x35,43”)

A	**Simplicity:**	3,7”
	Style:	3,7”
	Smart:	4,13”

home

handicare by Savaria®

The measurements given are theoretical, might differ in practice due to flexibility in the system.

DOOR IN FRONT

SIDE VIEW

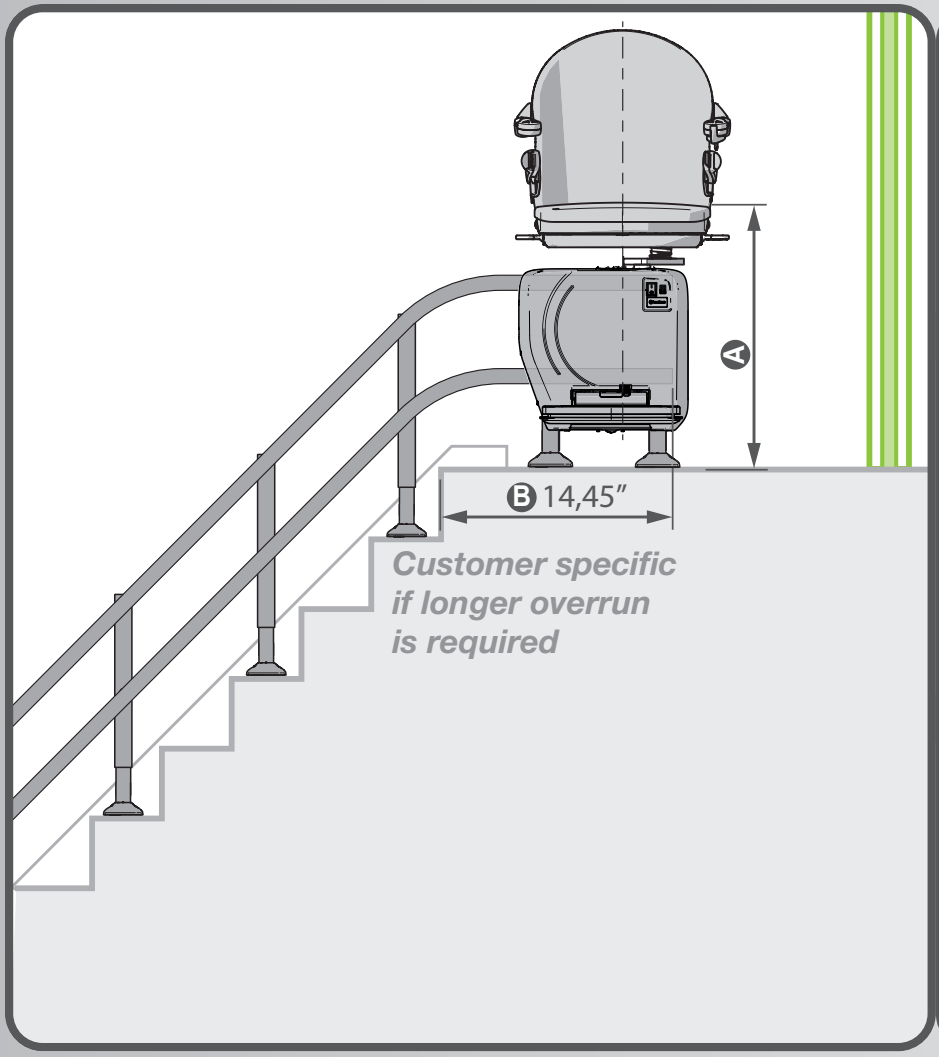

TOP VIEW

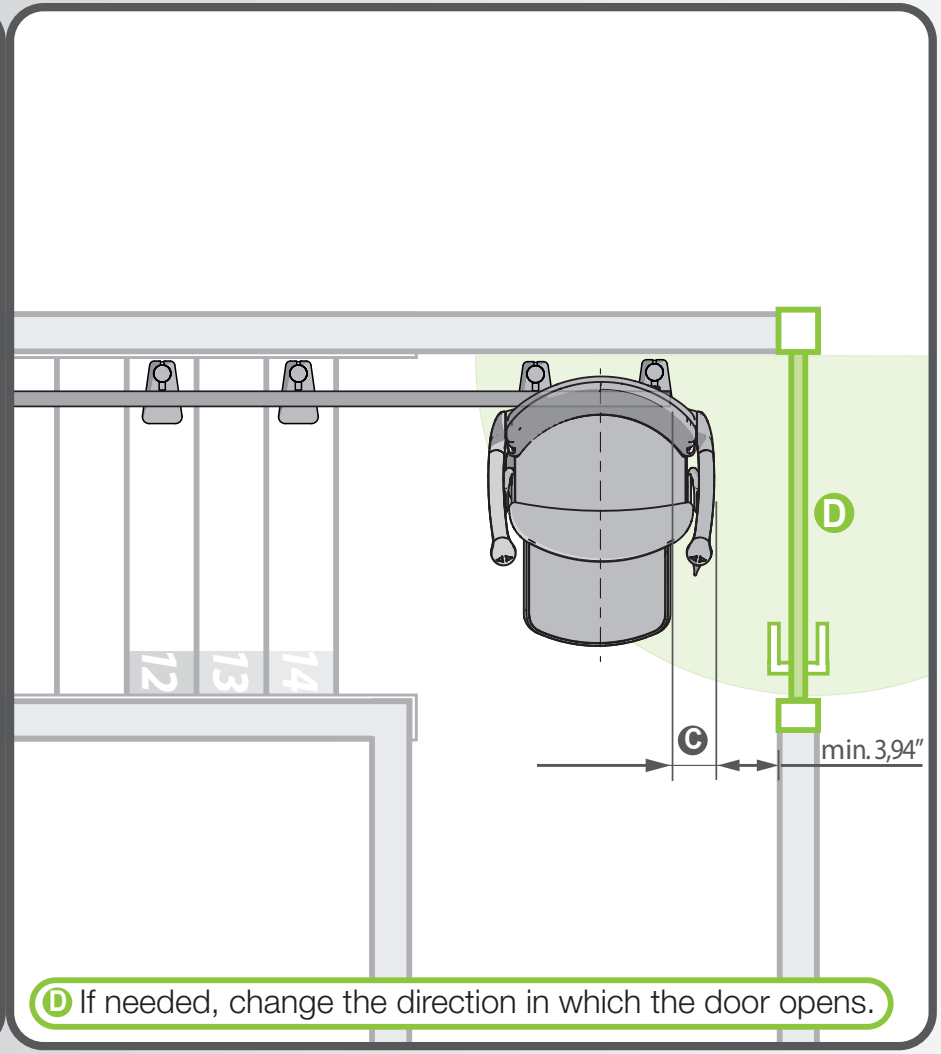

D If needed, change the direction in which the door opens.

A Distance from Floor to Seat Cushion:
Simplicity: 21,26 - 24,41”
Style: 21,26 - 24,41”
Smart: 22,05 - 25,98”

B 367 mm is recommended. Shorter or longer is possible. When shorter the chair needs to be swivelled before getting on/off.

C **Simplicity:** 3,7”
Style: 3,7”
Smart: 4,13”

Value shown in brackets are when footplate is set in higher position.

home

handicare by Savaria®

ALLEY

SIDE VIEW

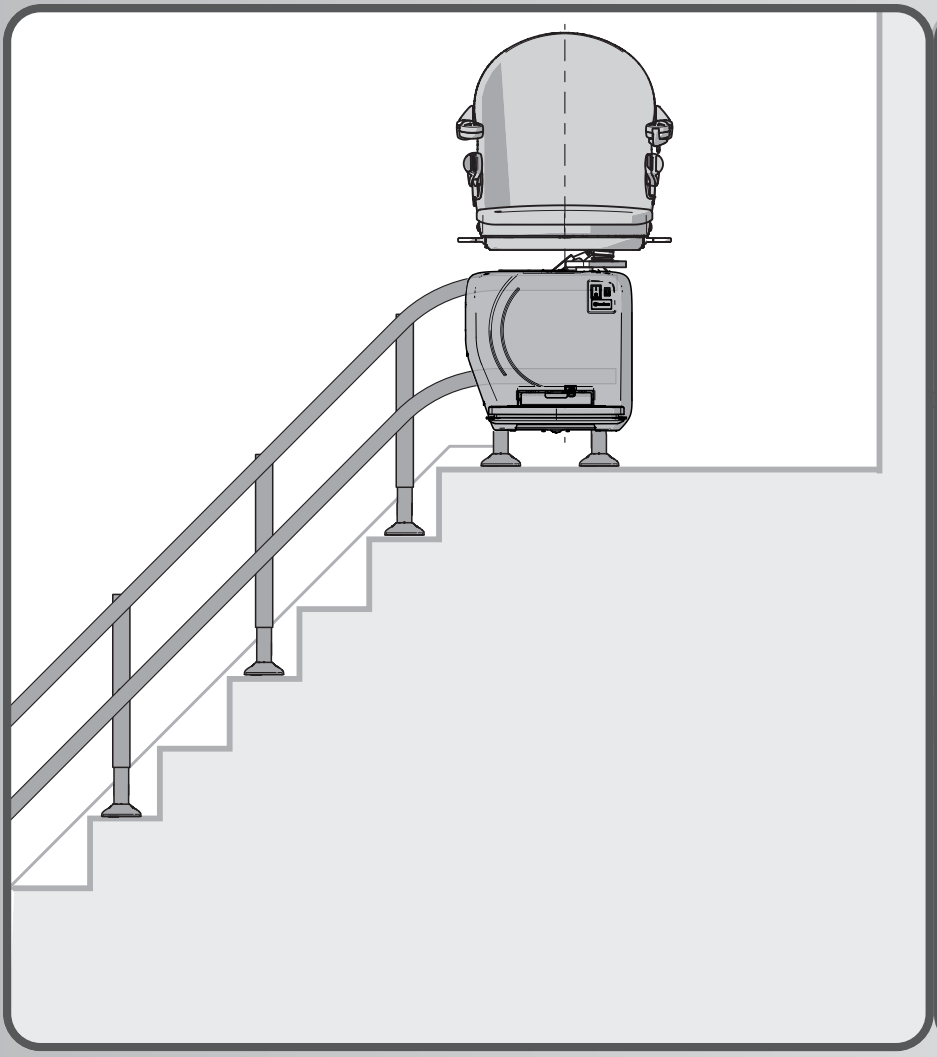

TOP VIEW

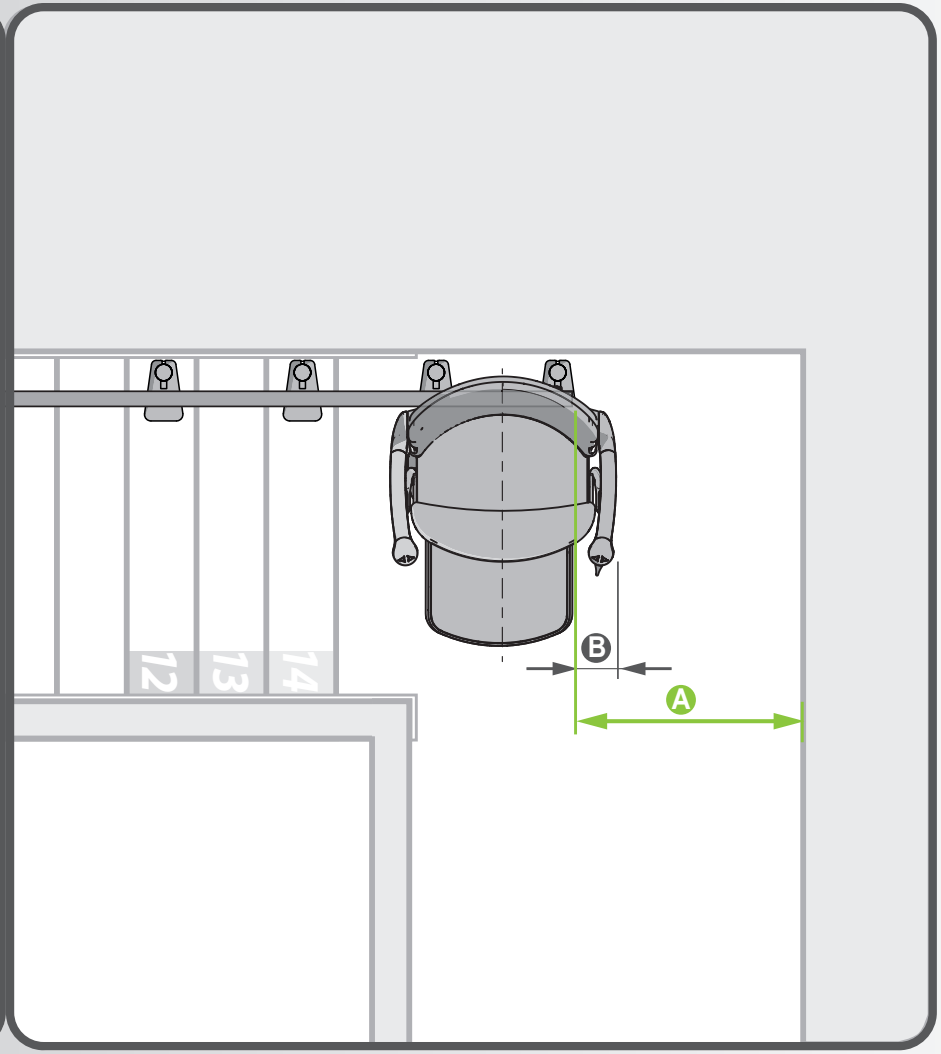

Ⓐ Clearance is needed for service and installation.

Ⓑ **Simplicity:** 3,7”
Style: 3,7“
Smart: 4,13”

home

handicare by Savaria®

INNER SIDE_*min. ?*

SIDE VIEW

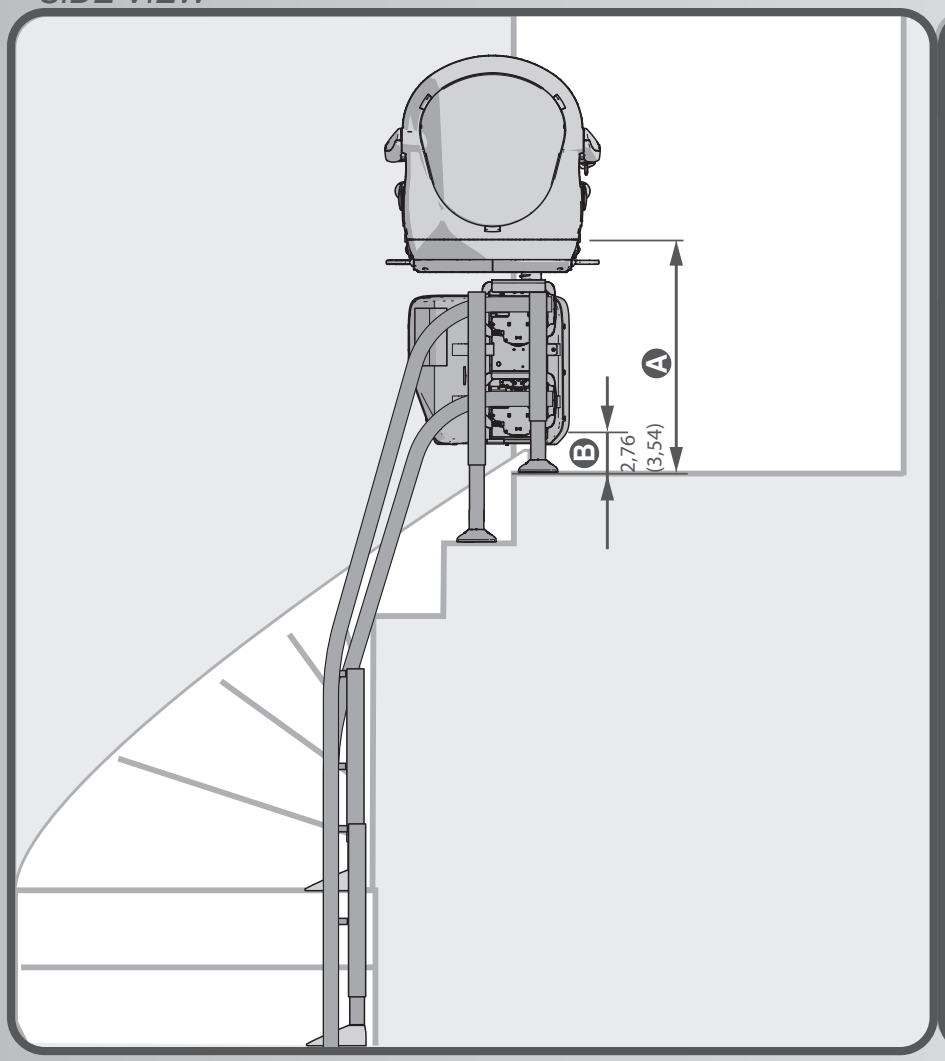

TOP VIEW

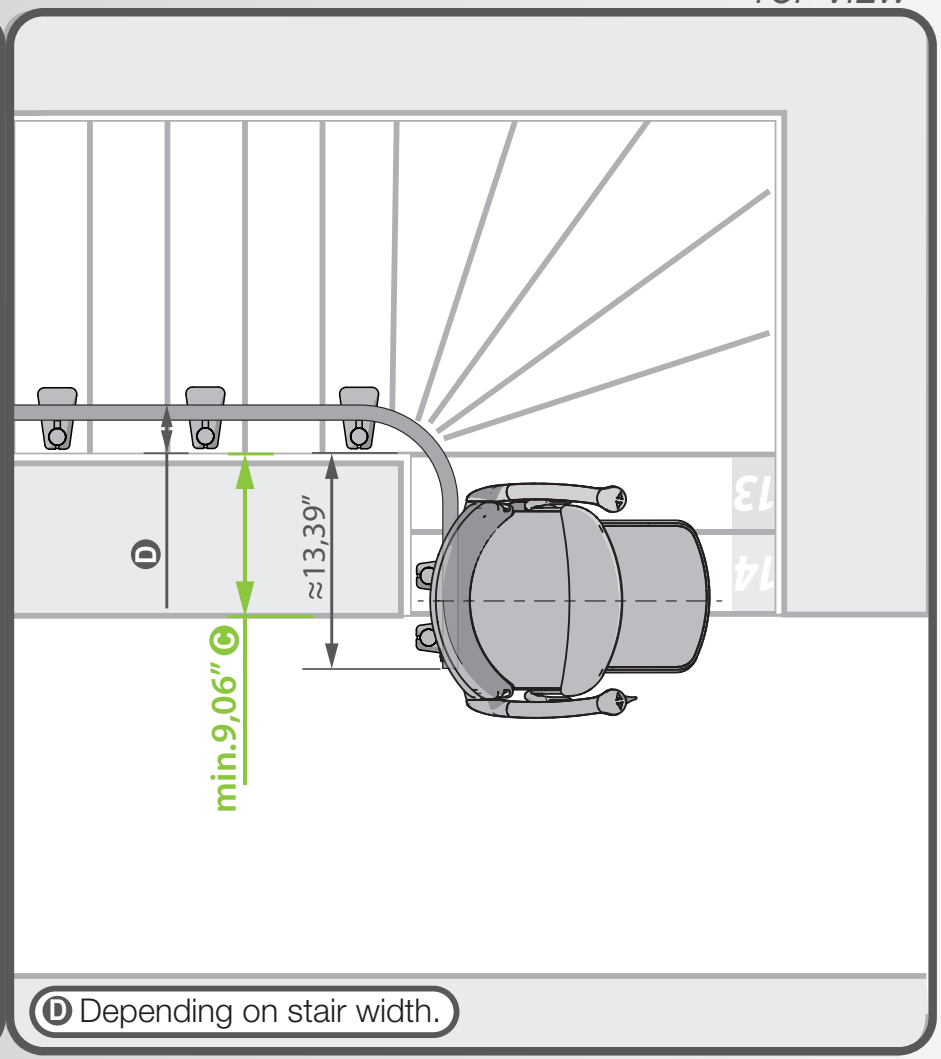

Ⓓ Depending on stair width.

Ⓐ **Simplicity:** 21,26 - 24,41”
Style: 21,26 - 24,41“
Smart: 22,05 - 25,98”

Ⓑ Measures are for footrestlevel, might differ dependant on rail angle and length of overrun.

Ⓒ If size is more than 13,39” the rail ends horizontal.

The measurements given are theoretical, might differ in practice due to flexibility in the system.

INNER SIDE_*max. ?*

SIDE VIEW

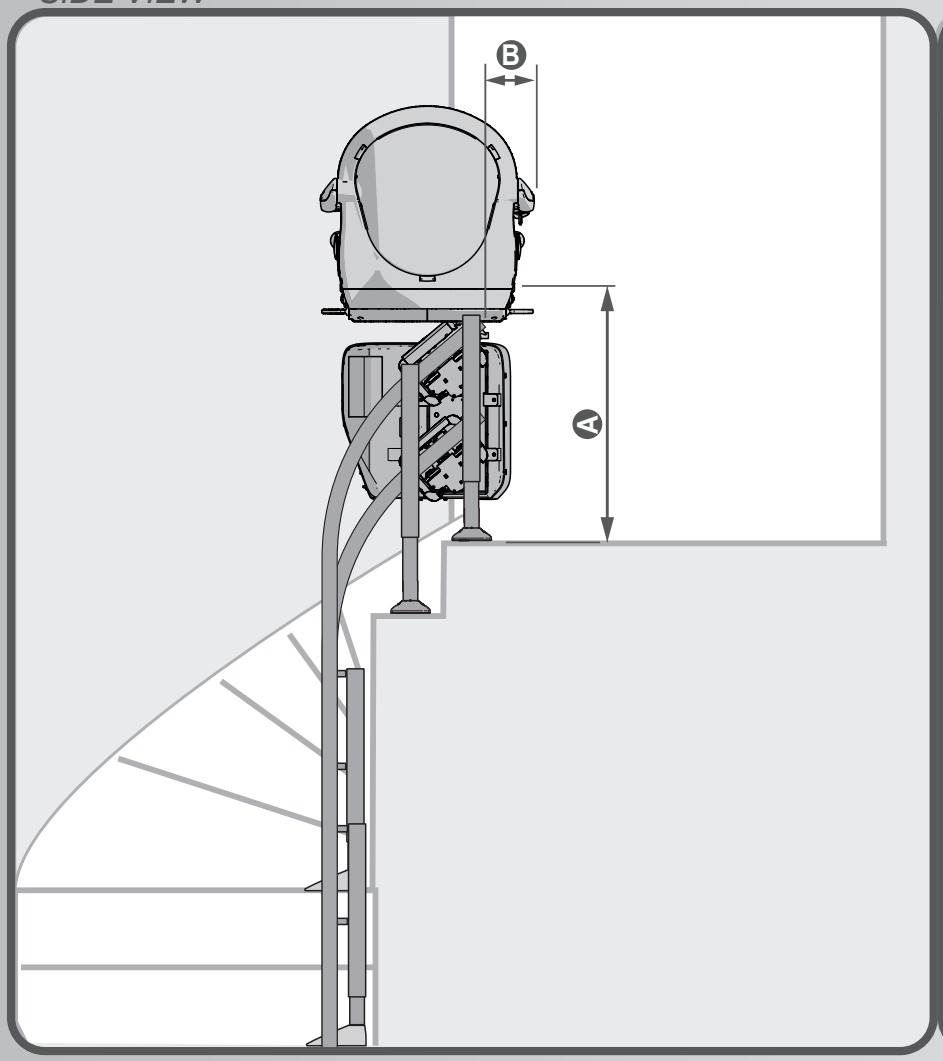

TOP VIEW

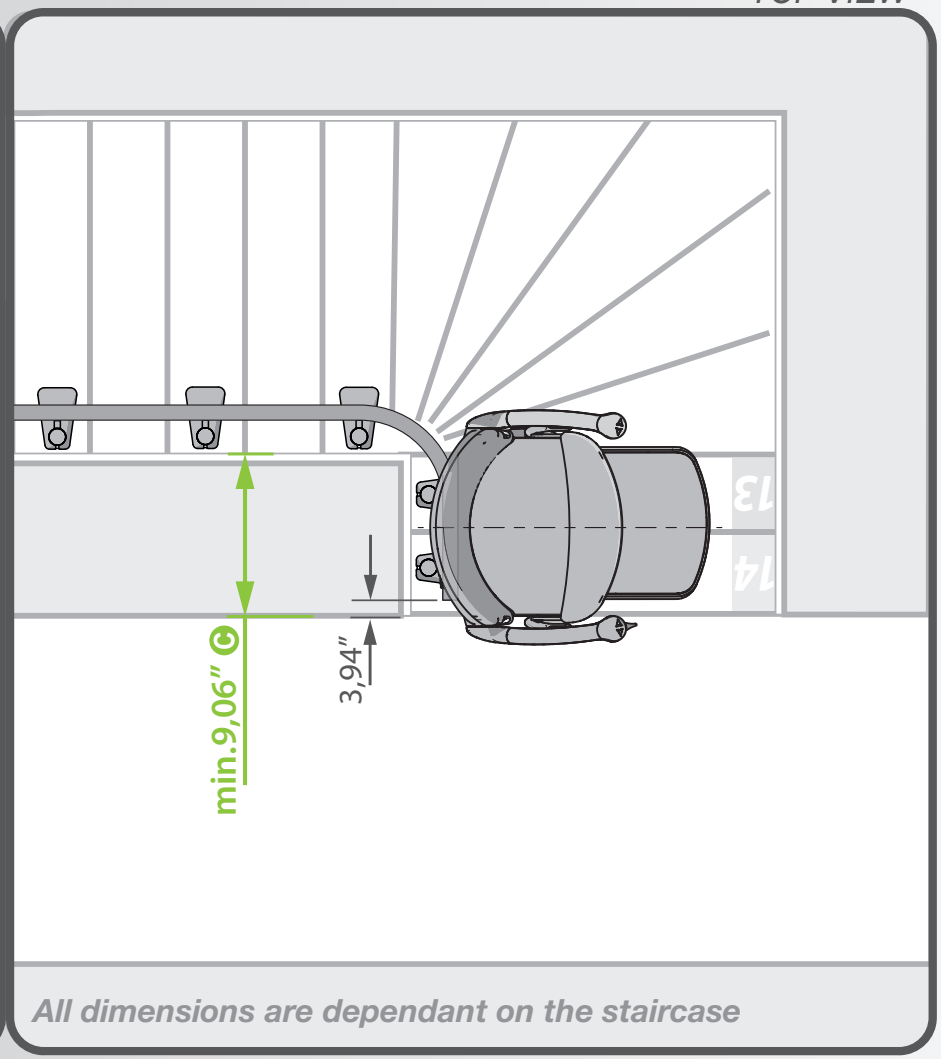

All dimensions are dependant on the staircase

Ⓐ Measures dependant on rail angle and length of overrun.
Ⓑ **Simplicity:** 6,46”
Style: 6,46“
Smart: 6,89”
Ⓒ If size is less than 9,06” the rail ends at an angle.

home

handicare by Savaria®

The measurements given are theoretical, might differ in practice due to flexibility in the system.

90º PARK INSIDE

SIDE VIEW

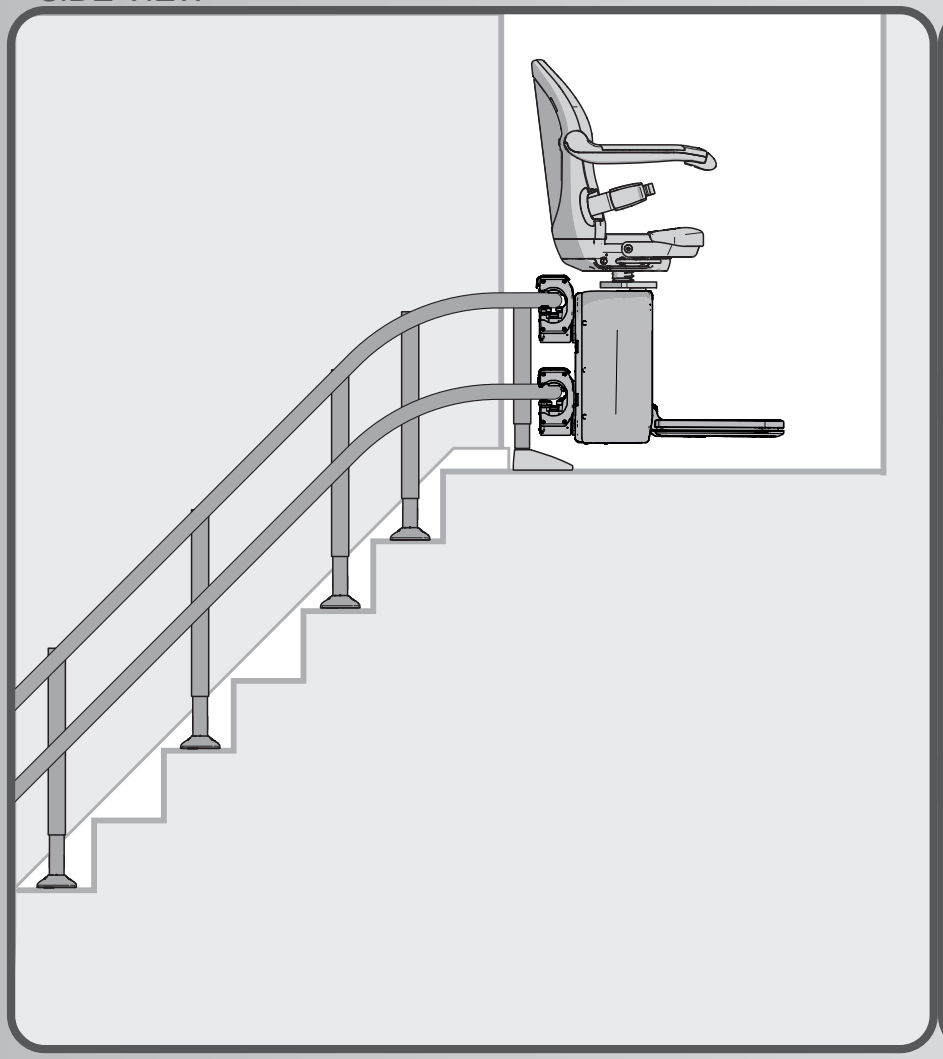

TOP VIEW

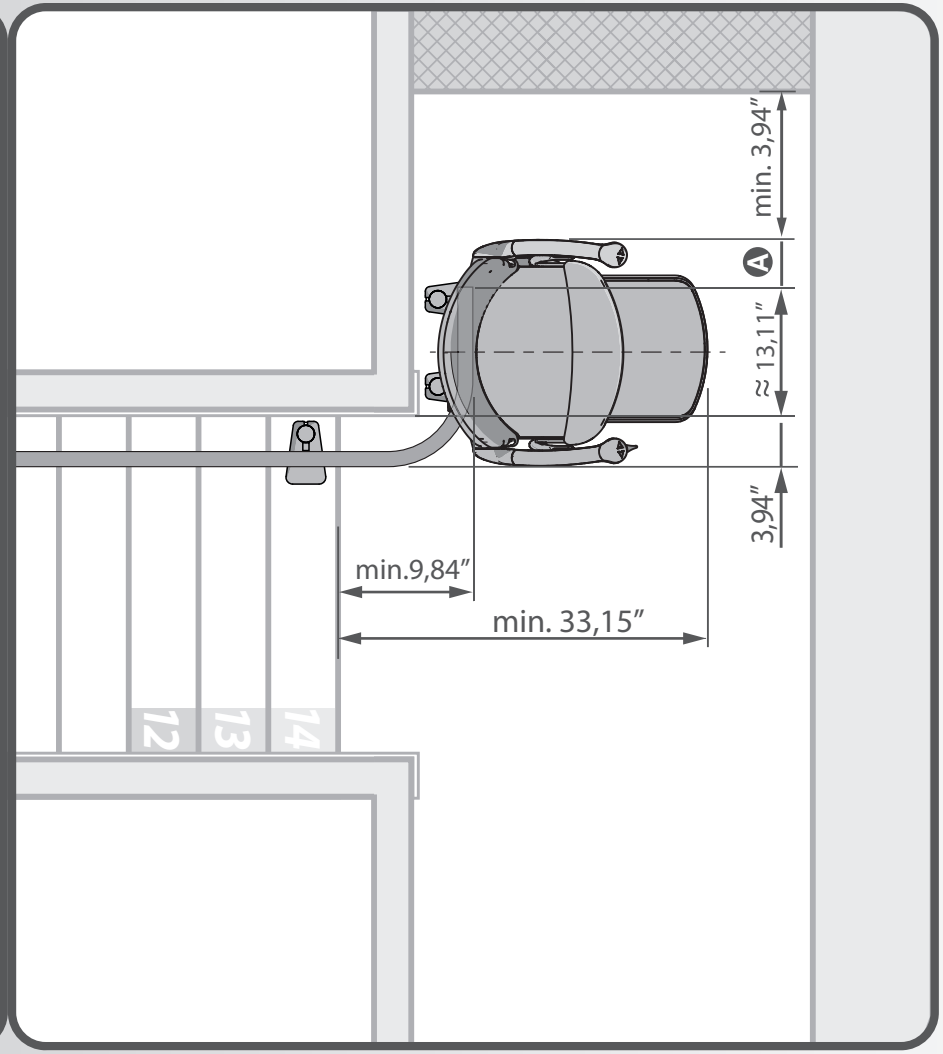

A Simplicity: 3,7"
Style: 3,7"
Smart: 4,13"

The measurements given are theoretical, might differ in practice due to flexibility in the system.

180° PARK INSIDE

SIDE VIEW

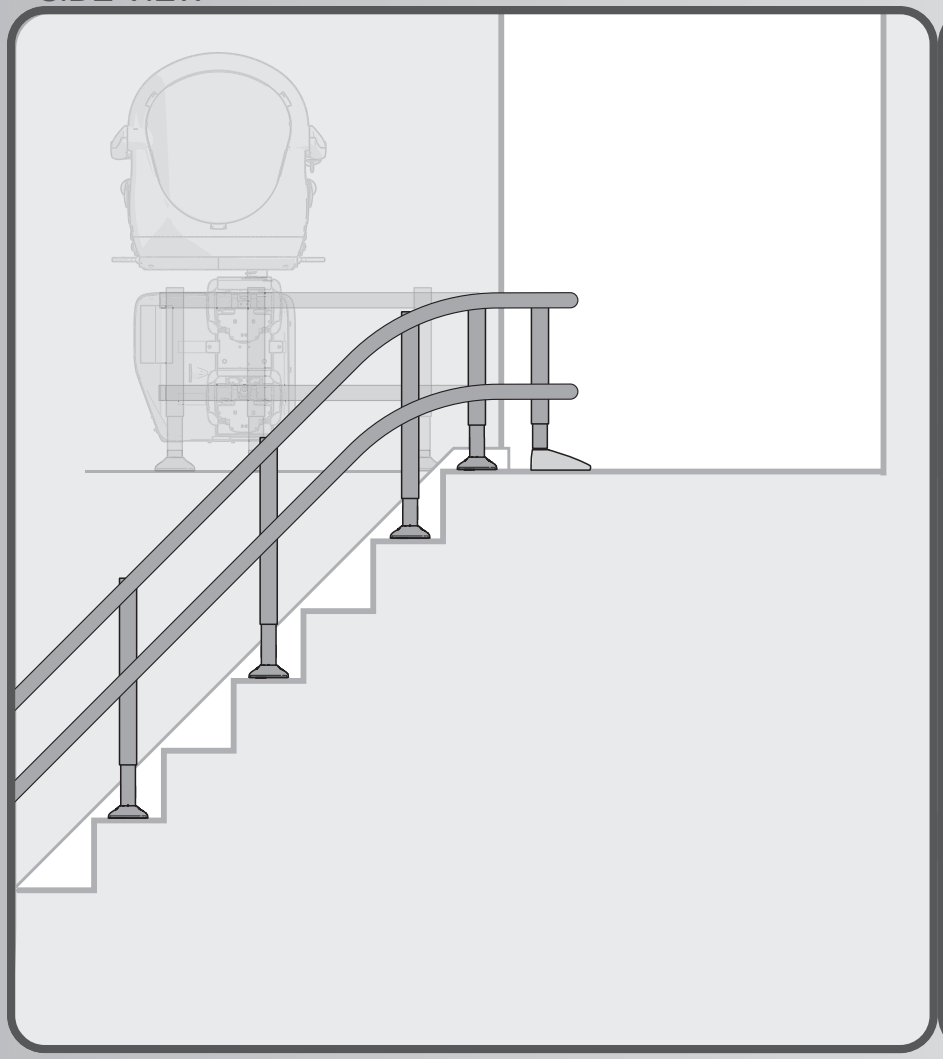

TOP VIEW

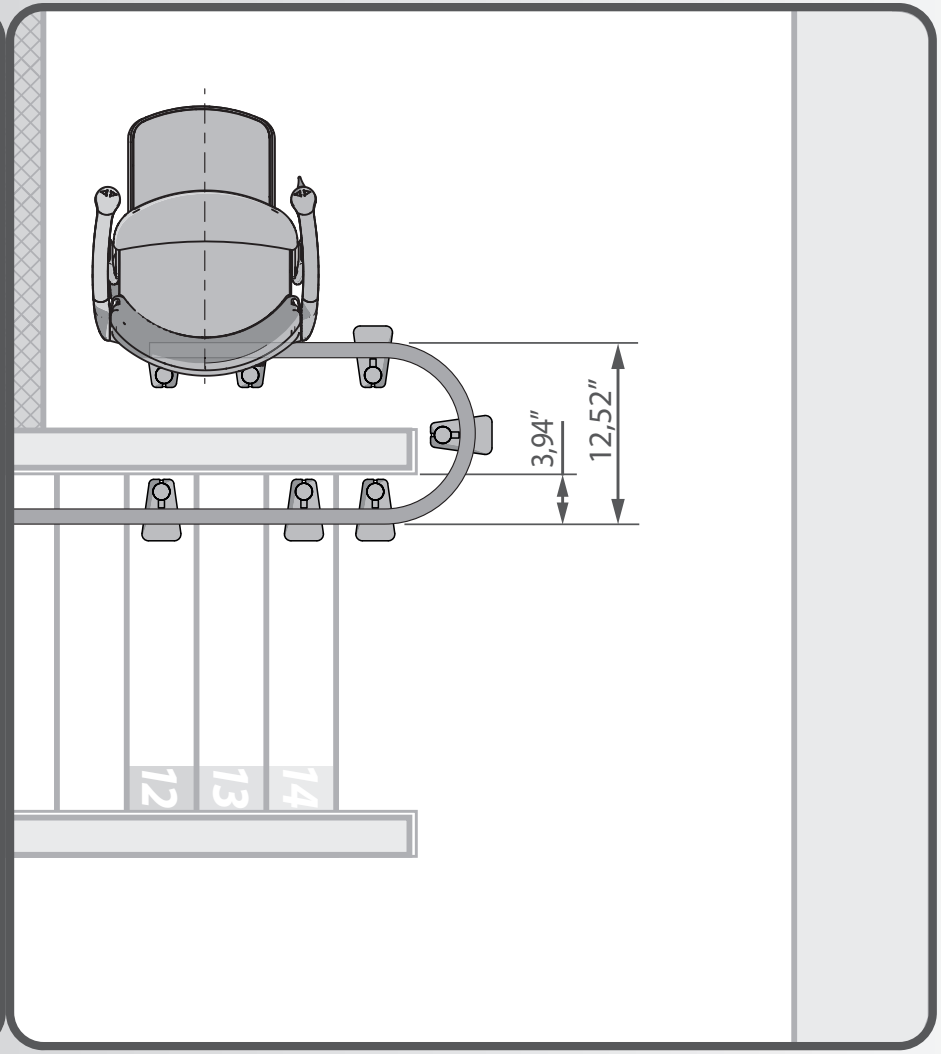

The measurements given are theoretical, might differ in practice due to flexibility in the system.

Attachments

STANCHION SPACING

3D-VIEW

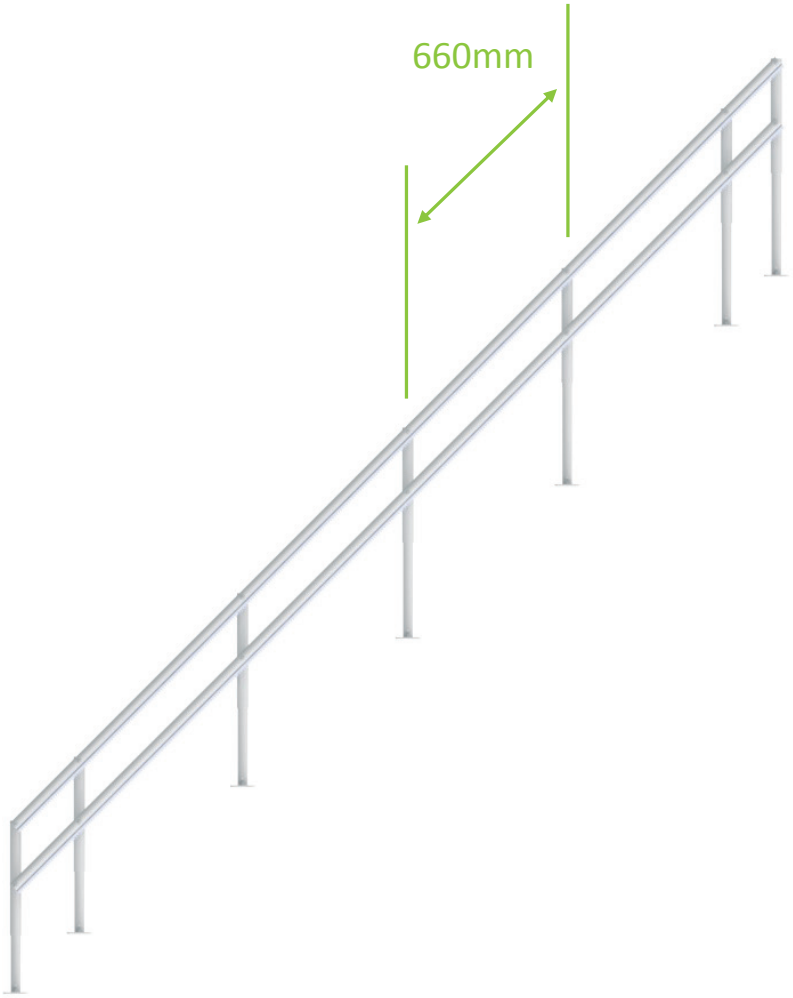

Heavy Duty (160 kg): Maximum stanchion spacing 660 mm (every other step)

UNDERFLOOR BRACKET

3D-VIEW

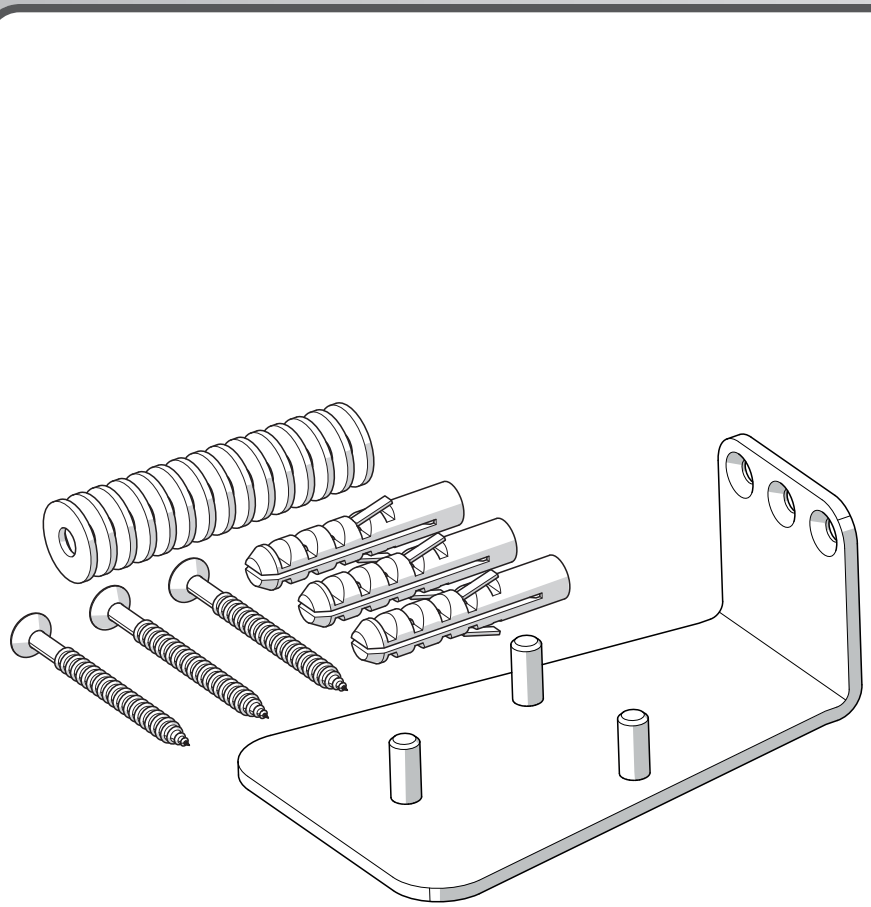

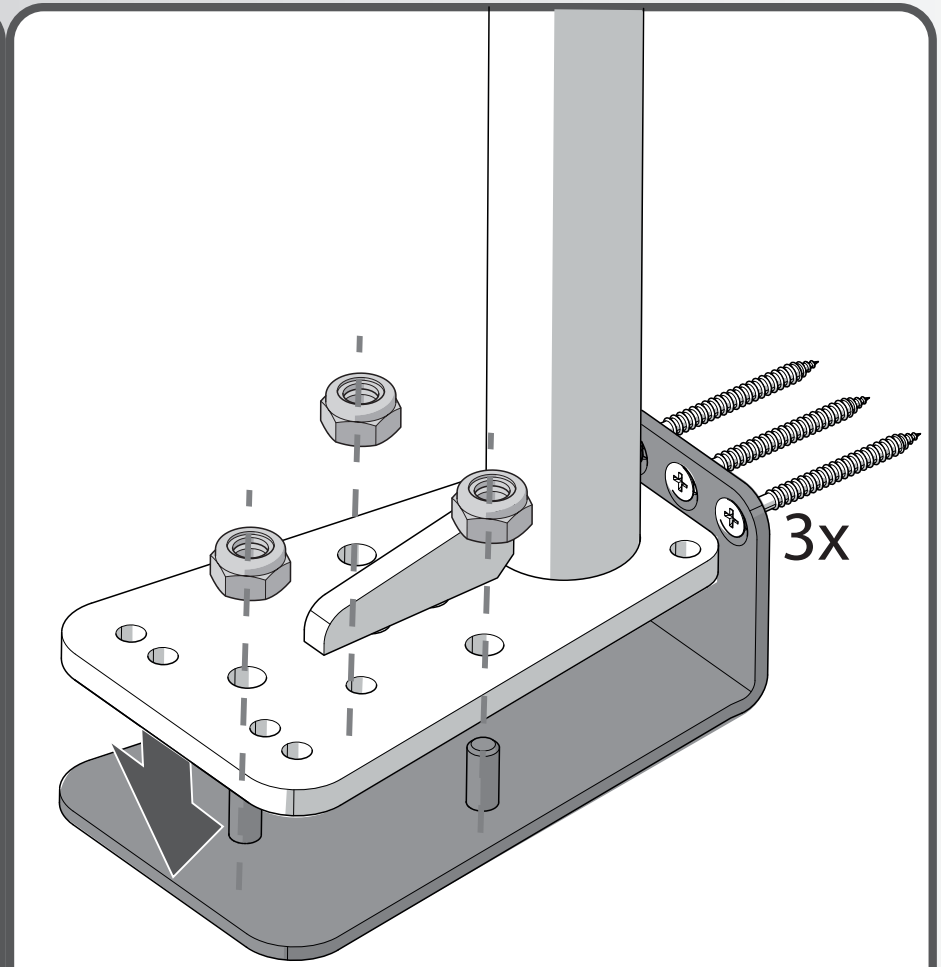

Wall mounted plate for installations where service pipes/underfloor heating may limit floor fixation.

SPACER PLATES

3D-VIEW

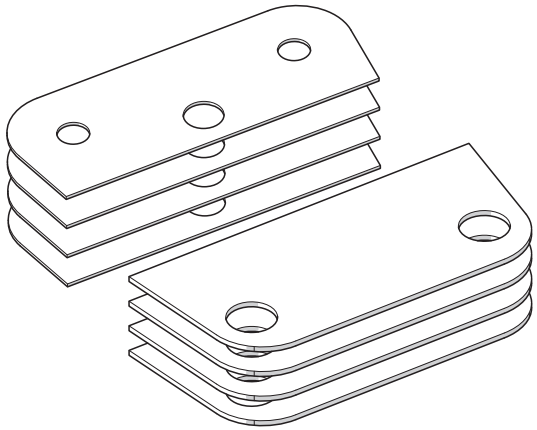

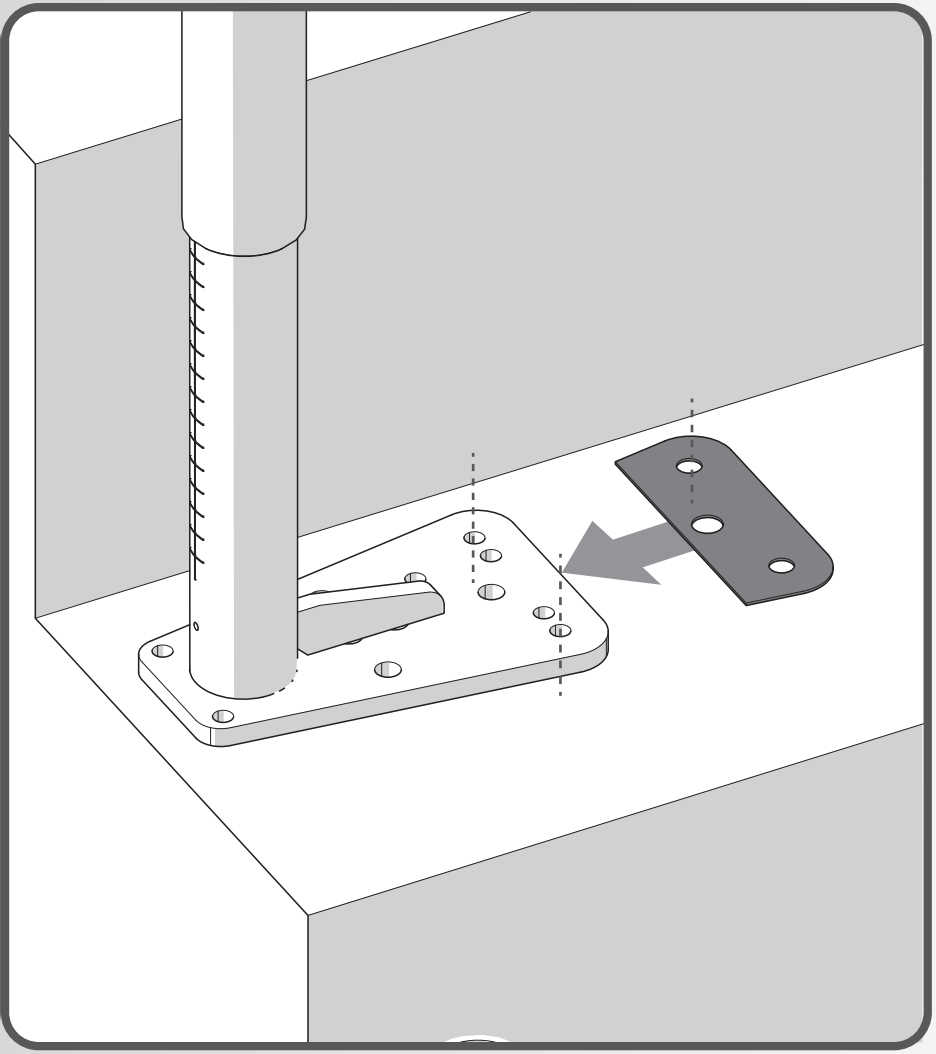

Spacer plates for uneven floor types or carpet runners.



Tools

PHOTOSURVEY



PHOTOSURVEY 4D by Handicare®

To shorten the design process, prevent measurement errors, and to get a good idea of what the stairlift will look like in the customer's home environment, Handicare has developed PhotoSurvey4D. This is the number 1 measurement tool that provides 100% reliable measurements and 3D visualisation of the stairlift on the customer's stairs.
Handicare PhotoSurvey4D lets you show your customer the Handicare solution there and then.

Given that specific technical skills are no longer required, PhotoSurvey4D is easy to integrate into the sales process. It will allow you to save both time and money. Using this system and a mobile internet connection, your measurement or complete rail design can be at Handicare and accepted for further processing within 30 minutes!

handicare by Savaria®

Certificate

APPROVAL

FRONT VIEW

liftinstituut
SINCE 1933

RvA P 007

EC-TYPE EXAMINATION CERTIFICATE

Warenwetbesluit machines
Issued by Liftinstituut B.V. Identification number Notified Body 0400,
commissioned by Decision no. 2023-0000172941

Certificate no.	: NL22-400-1001-120-06	Revision no.: 1
Description of the product	: Battery operated stairlift with chair carriage on a twin rail curved track system	
Trademark	: Handicare	
Type no.	: 4000-series	
Name and address of the manufacturer	: Handicare Accessibility Ltd. 82 First Avenue, Pensnett Estate Kingswinford, West Midlands DY6 7FJ United Kingdom	
Name and address of the certificate holder	: Handicare Accessibility Ltd. 82 First Avenue, Pensnett Estate Kingswinford, West Midlands DY6 7FJ United Kingdom	
Certificate issued on the following requirements	: Machinery directive 2006/42/EC	
Certificate based on the following standard	: EN81-40:2020	
Date of EC-type examination	: January 2023 - June 2024	
Additional document with this certificate	: Report belonging to the EC-type examination certificate no.: NL22-400-1001-120-06 rev 1	
Additional remarks	: Maximum load	137 kg / 160 kg
	Maximum speed	0.12 m/s
	Minimum - Maximum inclination	0° - 56°
	Maximum rail length 0° - 45°	18 m / 15 m
	Maximum rail length 46° - 56°	15 m / 12 m
	Controller	HAN125 V1-07
	see chapter 5 of the report belonging to this EC-Type examination certificate.	
Conclusion	: The machine meets the requirements of the Machinery directive 2006/42/EC considering any additional remarks mentioned above	

Certification decision by

Amsterdam
Date : 02-07-2024
Valid until : 02-07-2029

W.G. Kasteleijn
Product Manager Certification

The H4000 complies with:

Safety Standard for Platform Lifts and Stairway Chairlifts [ASME A18.1:2020 Ed.8]
Elevator and Escalator Electrical Equipment [ASME A17.5:2019 Ed.6]
Elevator and Escalator Electrical Equipment [CSA B44.1:2019 Ed.6]
Platform Lifts And Stair Lifts For Barrier-Free Access [CSA B355:2019 Ed.7]

Summary

COMPATIBILITY

- The 4000 rail is downwards compatible with additional fitting kit (AA29348) for a 2000 powerpack
- The 4000 powerpack is not downward compatible with the 2000 rail
- The 4000 seats (Simplicity, Smart, Style) are downwards compatible with an adapter cable to be supplied with the seat
- The 2000 rail will not be sold in Europe after April 2023

SUMMARY CONDITIONS

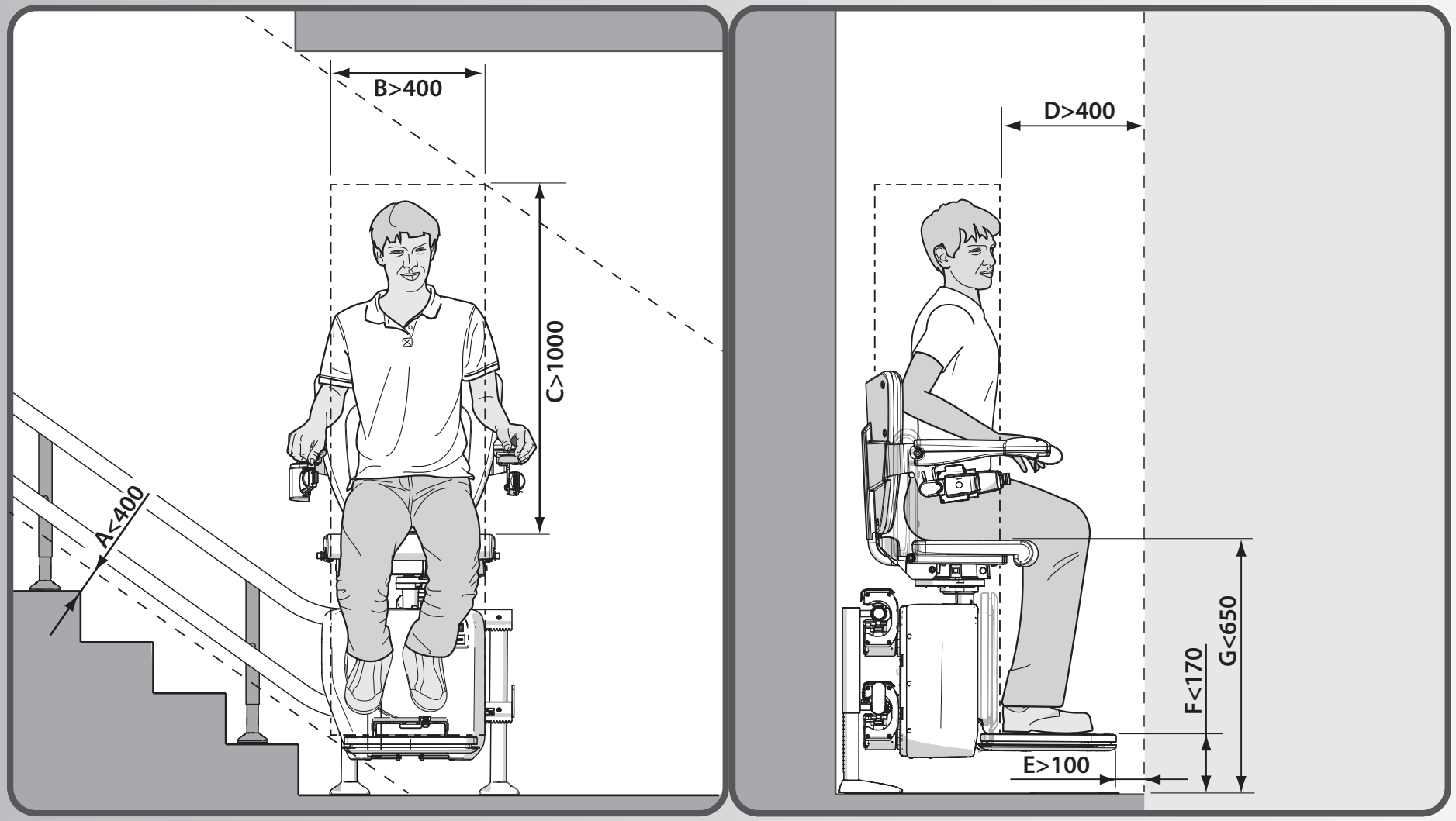

TOPIC SEARCH

handicare by Savaria®

Seat types

Smart Seat 6
Simplicity Seat 7
Style Seat 8
Perch Seat 9
Child Seat 10
Outdoor Seat 11

Lift types

4000 13
Left/Right handed 14

Lift parts

Unit 16
Batteries 17
Footrest 18
Safetybelt 21
Armrest 24
Swivel 26
Control 27
User interface 28
Key switch 29
On/off switch 30
Emergency stop 31
Remotes 32
Power supply 33
Rail 34
Charging points 35
The hinged rail 36

Options

Powered swivel 38

Optional extras

Optional extras 39

Dimensions

Smart Seat 41
Simplicity Seat 42
Style Seat 43
Perch Seat 44

Stair types

Straight 46
Not straight 47

Stair width

User 49
Obstacle 50
Inner side_standard 51
Inner side_landing 52

Turning space

User 54
Seat 55

Bulkhead

Overhead clearance 57

Downstairs

Standard 59
Short railend 60
Short railend_+guard 61
Hinge_outer side 62
Horizontal 63
90° Park_standard 64
90° Park_horizontal 65
180° Park_standard 66
180° Park_horizontal 67

Upstairs

Standard 69
Footrest '0' 70
Standard_+guard 71
Door in front 72
Alley 73
Inner side_min ? 74
Inner side_max ? 75
90° Park 76
180° Park 77

Attachments

Stanchion spacing 79
Underfloor brackets 80
Spacer plates 81

Tools

Photosurvey 83

Certificate

EC Certificate 85

Summary

Compatibility 87
Summary conditions 88

All rights reserved. No part of this publication may be reproduced and/or published by means of print, photocopy, microfilm or in any other way or form, without prior written permission from the manufacturer. This also applies for the accompanying drawings and diagrams. The manufacturer reserves the right to change parts at any time, without prior or direct notification to the customer. The dimensions in this manual might vary from the actual situation due to the size, shape and angle of the stairs.The contents of this manual may also be changed without prior warning.
This manual has been compiled with the best intentions and every possible care but the manufacturer cannot accept responsibility for any errors in this manual or for the consequences thereof.
The Dutch manual is the original language.

handicare by Savaria®

Handicare Stairlifts B.V.
Newtonstraat 35
1704 SB Heerhugowaard
The Netherlands
Tel: +31 (0)72 576 88 88
stairlifts@handicare.com

Handicare Accessibility Ltd
82 First Avenue, Pensnett Estate
Kingswinford, West Midlands
DY6 7FJ United Kingdom
Tel: +44 (0)1384 408 700
enquiries@handicare.co.uk

Handicare Monte-escaliers
4 Rue des Piverts
ZAC de l' Aunaie
91610 Ballancourt-sur-Essonne
France
Tel: +33 (0) 1 69 46 86 10
monte-escaliers@handicare.fr

Handicare Accessibility GmbH
Lübbecker Straße 240
32429 Minden
Deutschland
Tel: +49 (0) 571 97398-44
technik.handicare@handicare.com

Handicare Montascale Italia
Via Chiaviche 17
46020 Pegognaga (MN)
Italy
Tel: +39 (0) 376 143 3516
handicare-montascale.it

Handicare
10888 Metro Court
St. Louis, MO 63043
United States of America
Toll Free: 1.866.891.6502
Local: 314.692.9135
sales.us@handicare.com

Handicare Canada
81 Romina Drive,
Concord, ON L4K 4Z9
Canada
T : 905.850.9003