HANDICARE FREECURVE | SALES MANUAL

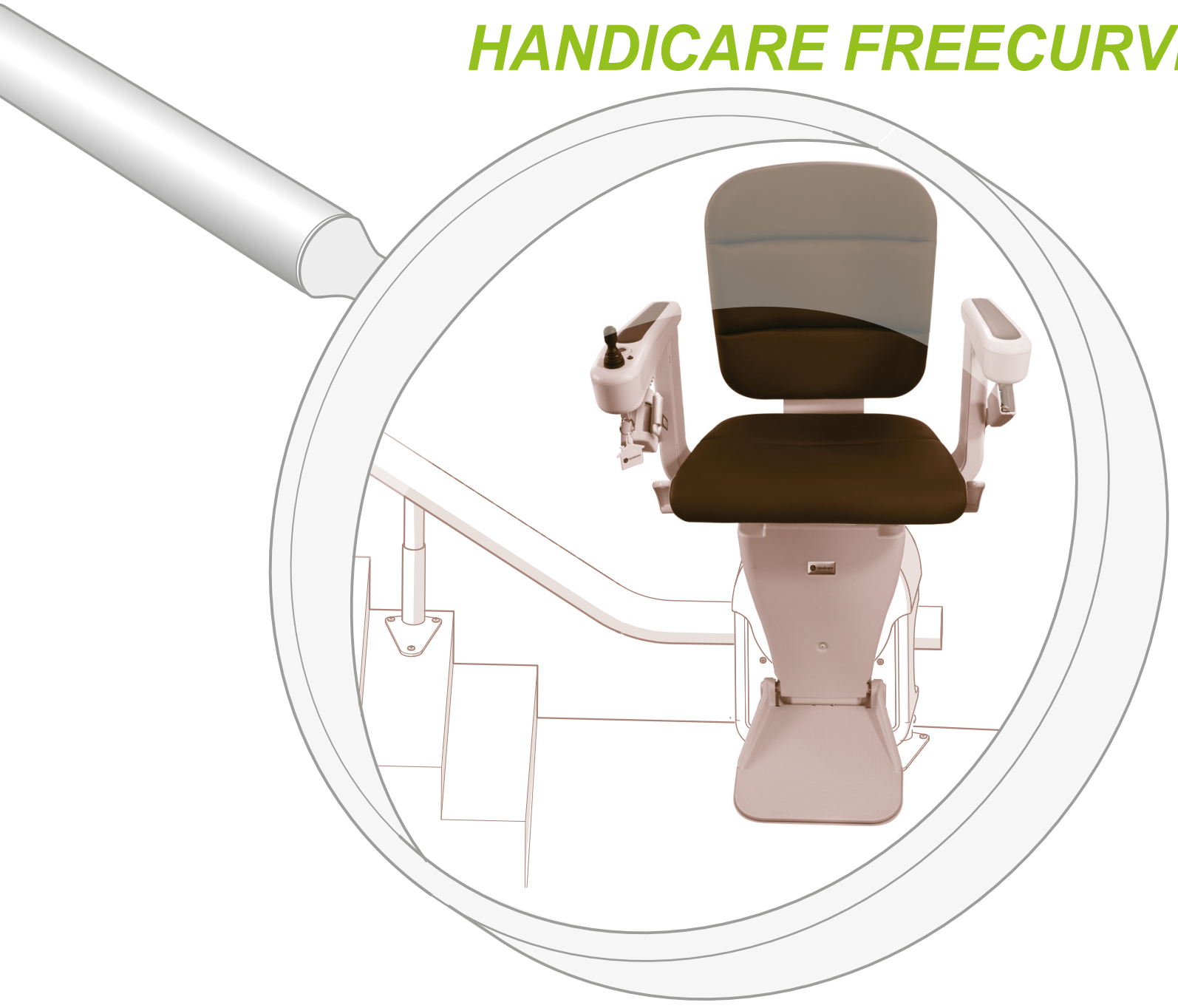

US

handicare by Savaria®

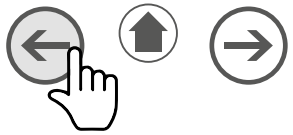	Click on a highlighted arrow on the bottom of the pages.	Go back, go home, go forward in this document.
	Click on a highlighted button on page 1.	Go to a specific chapter of the this document.
	Click on a highlighted coloured icon on the bottom of the pages.	A picture, a movie or a flyer of the topic on the page, will be downloaded.
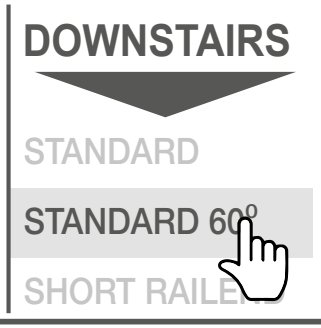	Click on highlighted item in the navigationbar on the right side of the pages.	Go to a specific page of the this document.
	Click on the highlighted handicare logo on the bottom right side of the pages.	Go to the index with all the to-pics in this document.
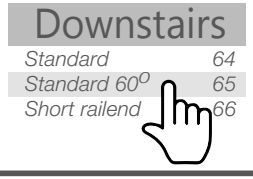	Click on a highlighted topic on the index-page.	Go to a specific page of the this document.

CONTENTS

handicare

Page 4 - 8

Seat types

Page 9 - 13
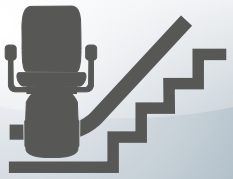
Lift types

Page 14 - 31

Lift parts

Page 32 - 42
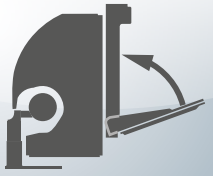
Options

Page 43-47
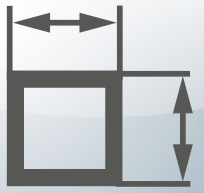
Dimensions

Page 48 - 50

Stair types

Page 51 - 59

Stair width

Page 60 - 62

Turning space

Page 63 - 64
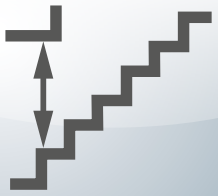
Bulkhead

Page 65 - 78

Downstairs

Page 79 - 90

Upstairs

Page 91 - 98

Faults&Tips

Page 99 - 110

Attachments

Page 111 - 114

Tools

Page 119 -

Exercise

GENERAL

3D-VIEW



Power supply:	*90 V ~ – 240 V ~*
Frequency:	*50 / 60 Hz*
Current:	*1 Amp*
Power consumption:	*360 Watt*
Max. weight:	*19.7 stone*
Max. speed:	*4.3 inch/sec (variable)*
Trips without recharging*:	*10 uninterrupted*
Max. angle of inclination:	*61 degrees*
Min. stair width Van Gogh:	*27.2 inch Classic* *Elegance* *Alliance*
Max. rail length:	*114.8 ft*
Ambient temperature:	32° - 104° F
Relative humidity:	20 – 80 %
Use environment :	Inside private residence

Stair lift suitable for the transport of one person with impaired mobility.

The stairlift may only be left at the designated points at the top and bottom of the rail.

INTENDED USE

3D-VIEW



INTENDED USER

1. Persons (exclusively) whose mobility has been reduced to such an extent that they are not able to move between floors along the stairs.
2. Users must be able to reach a safe location via the stairs in an emergency or, If they can't, they have enough help to do so.
3. The height of the chair must be tailored to the user's body size so that the feet are on or above the footrest when the user is seated.
4. Users must be able to either see or hear or if not receive assistance in the use of the stair lift.
5. Users must have sufficient strength and mental capacity to independently operate the controls and seat belt of the stair lift or with the assistance of a carer be able to remain in a stable position through the lift's travel.
6. Users must have sufficient strength and mental capacity to independently understand and perform the safety instructions as written in the user manual or receive assistance in the use of the stair lift.
7. Users younger than 12 years and smaller than 53 inch shall not be allowed to independently use the stair lift.
8. Users may not weigh more than the indicated maximum load of the stairlift.
9. The stairlift may only be used by one person at a time.

ENVIRONMENT

The strength and the suitability in general of wall, staircases, terraces, upper floors, banisters, plinths etc. which are to support or surround the installation shall be verified and ensured by the customer.
The steps will have to withstand: 145 Lb/inch^2.

Open stair rails (e.g. banisters) should be closed off so that the lift is not accessible from behind.

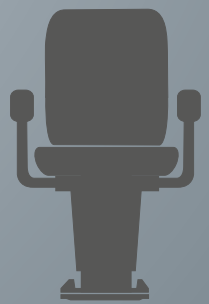

Seat types

CLASSIC

FRONT VIEW



The Classic chair can be delivered in 2 colours: beige and anthracite. The material has a leathergrain finish.

The armrest,footrest and seat fold up separately.

The chair can swivel centric in both directions.

It is possible to ride in a swiveled position.

Powered swivel seat is optional.
The powered and illuminated footrest is optional.

The footrest does not swivel with the seat.

Standard and offset footrest.

The height of the backrest can be increased (1.38 inch).

The position of the backrest can be adjusted on site to increase the depth of the seat by 1.97 inch.

ELEGANCE

FRONT VIEW



The Elegance chair can be delivered in cream and cocoa brown. The material is leatherlook.

The armrest, footrest and seat fold up separately.

The chair can swivel centric in both directions.

It is possible to ride in a swiveled position.

The footrest does not swivel with the seat.

Powered swivel seat is optional.

The illuminated powered footrest is optional.

Standard and offset footrest.

The width of the armrests is adjustable (0.98 inch).

The height of the backrest (0.79 inch) can be increased.

ALLIANCE

FRONT VIEW



The Alliance chair can be delivered in the color option brown wood with cream leather.

The armrest, footrest and seat fold up separately.

The chair can swivel centric in both directions.

It is possible to ride in a swiveled position.

The footrest does not swivel with the seat.

Powered swivel seat is optional.
The illuminated powered footrest is optional.

Standard and offset footrest.

The width of the armrests is adjustable (0.98 inch).

The height of the backrest (0.79 inch) can be increased.

SEAT TYPES

- **CLASSIC** *SEAT*
- **ELEGANCE** *SEAT*
- **ALLIANCE** *SEAT*
- **CHILD** *SEAT*

CHILD SEAT

FRONT VIEW



Will be installed on the Freecurve unit with an adapter-plate.

3 sizes (2,5/3/4).

Can be replaced with a Classic/Elegance/alliance seat later.

Can swivel at the top and bottom of the stairs.

No joystick.

Adjustable footrest (height, angle).

No footrest detection.

For more information:
http://www.r82.com/products/seating/panda-futura/c-23/c-69/p-168/?sku=48535

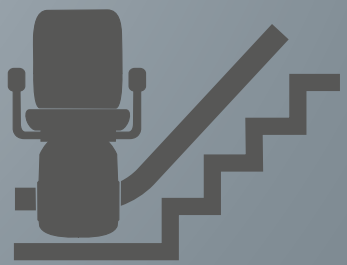

Lift types

VAN GOGH

3D-VIEW

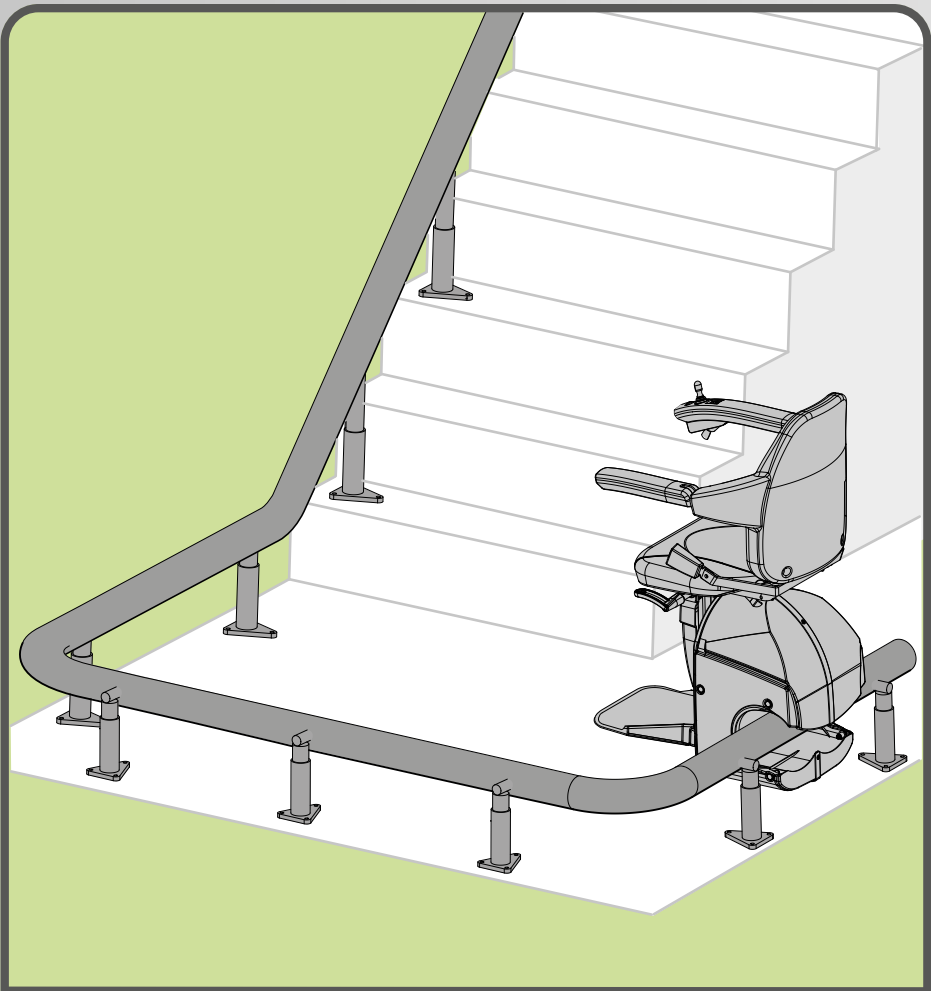

OUTER SIDE

The rail of the Van Gogh stair lift is mounted on the outer side of the stairs.

The maximum rail length is 114.8 ft

Both forward and reverse bends can be incorporated in a single length of Van Gogh and Rembrandt rail.

The inner side of the stairs can still be used by other users, in particular when a handrail is fitted on the inner side.

More time required for the trip.

Lower on the stairs.

In the event of obstacles on the inner side of the stairs.

Minimum width of stairs 27.17 inches

Maximum of 2 landings.

Overhead clearance less critical.

Installation almost always feasible.

View on the stairs during the ride.

REMBRANDT

3D-VIEW

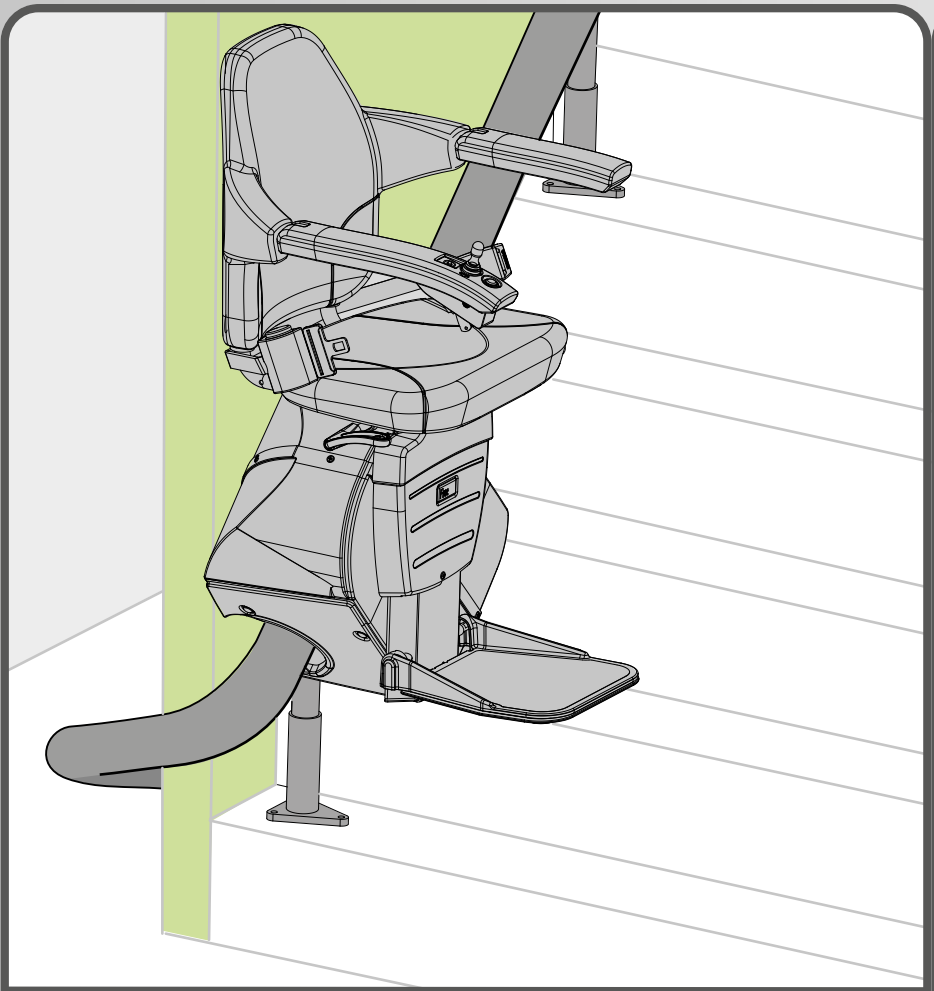

INNER SIDE

The rail of the Rembrandt stair lift is mounted on the inner side of the stairs.

The maximum rail length is 114.8 ft

Both forward and reverse bends can be incorporated in a single length of the Rembrandt rail.

The outer side of the stairs can still be used by other users.

Less time required for the trip.

Higher on the stairs. Maximum allowed distance between footrest and nose of the step is 15.75 inches. (EN 81-40).

In the event of obstacles on the outer side of the stairs.

Minimum width of stairs 30.31 inches

Multiple landings (Vermeer).

Overhead clearance more critical.

No view on the stairs during the ride.

VERMEER

3D-VIEW

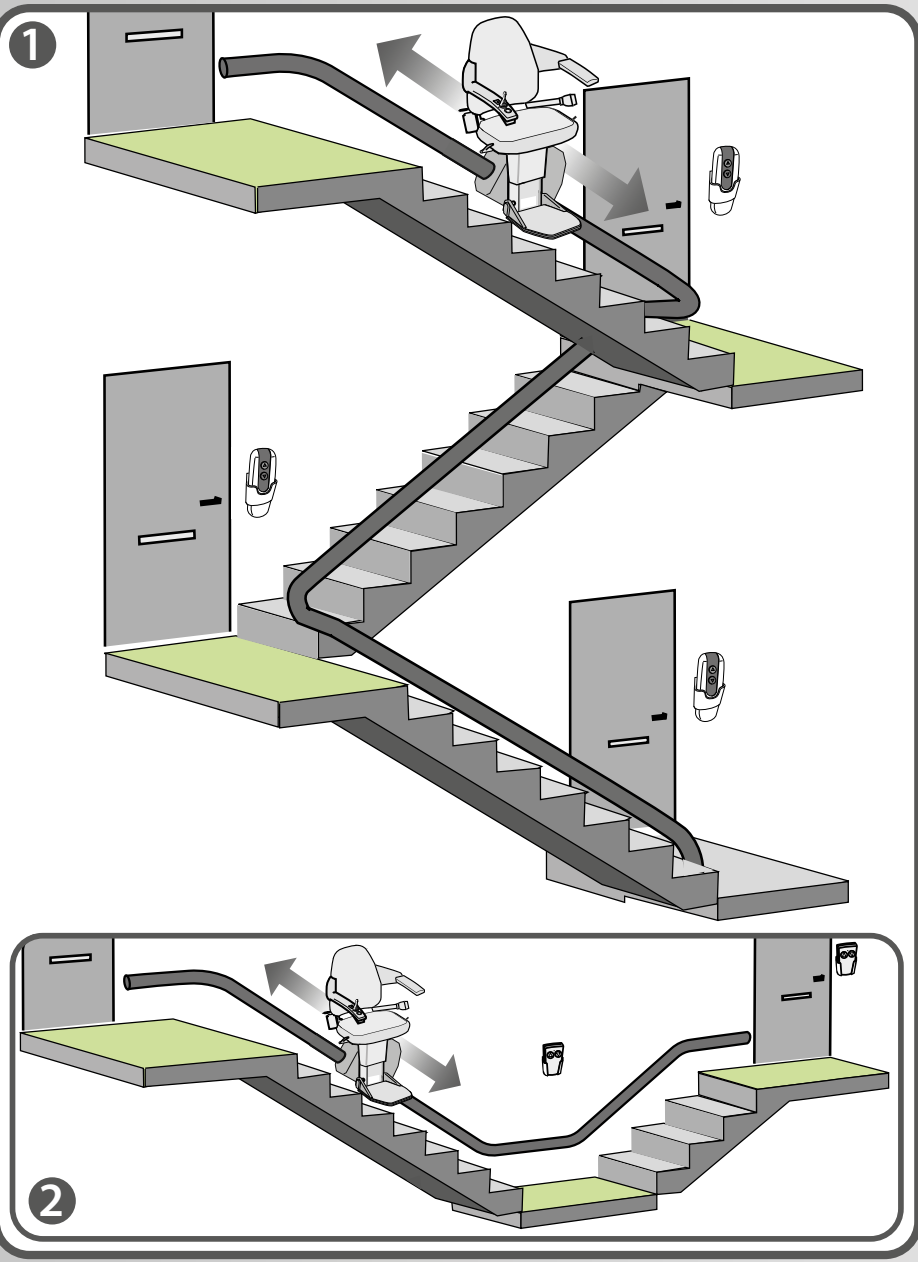

The Vermeer is a stairlift, fitted to the inside or the outside of the stairs, which travels to more than one floor.
In one track, the rail orientation can be downwards and upwards (figure 2).
The Vermeer is intended for private and lockable public buildings.

Max. rail length (EN 81-40): 114.8 ft

Max. number of charge points/stops: 10
(including charge/stoppoints at the bottom and top of the rail and including folding hinge point)

Max. number of remotes: 10

Available with the Classic/Elegance/Alliance seat.

Optional for all models:
The lift can transmit an acoustic signal when the remote controls are used.

Rail length	Battery	Capacity	Possible meters without charging
< 30 ft	Standard	8 Ahr	590 ft
30-98 ft	Extra Power	12 Ahr	771 ft
> 98 ft	Ultra Power	20 Ahr	2297 ft

LEFT/RIGHT HANDED

3D-VIEW

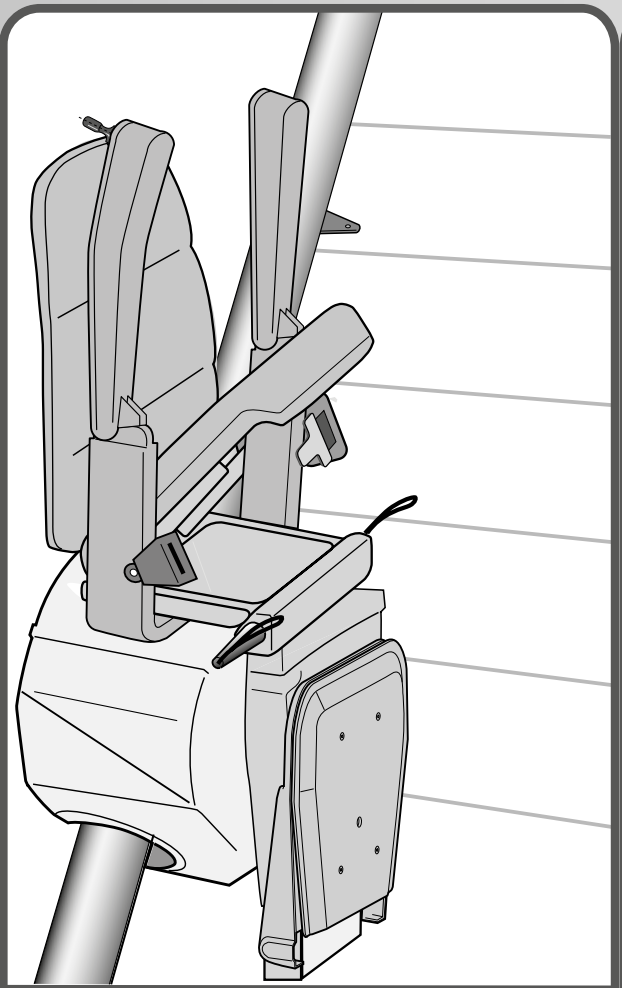

LEFT HANDED

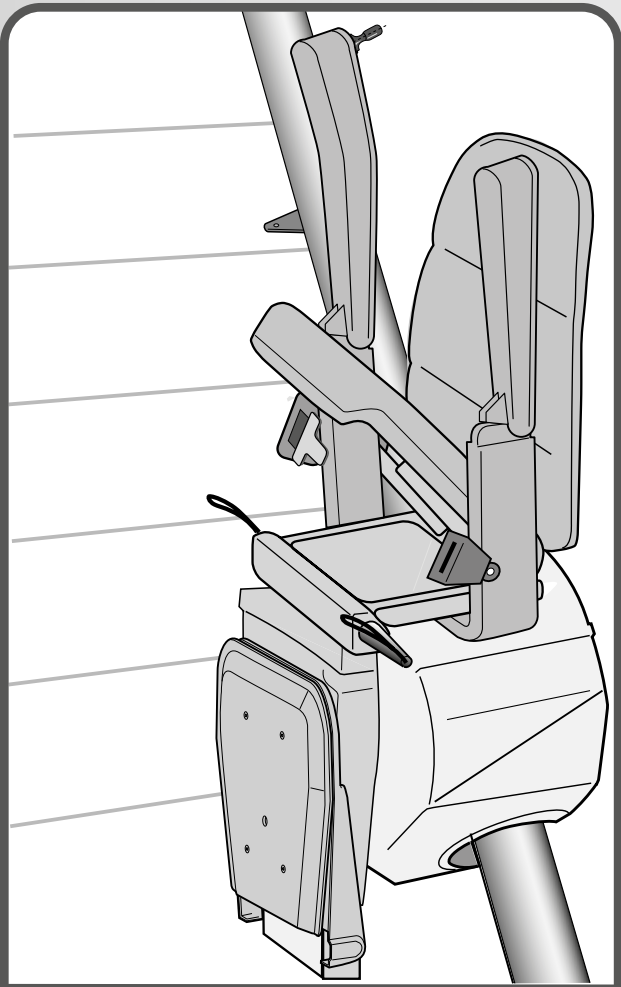

RIGHT HANDED

The side on which the rail is mounted when viewed from the bottom of and facing the stairs determines whether the model is a left-hand or a right-hand version.

The position of the joystick is stated when sitting on the chair.



Lift parts

THE UNIT

3D-VIEW

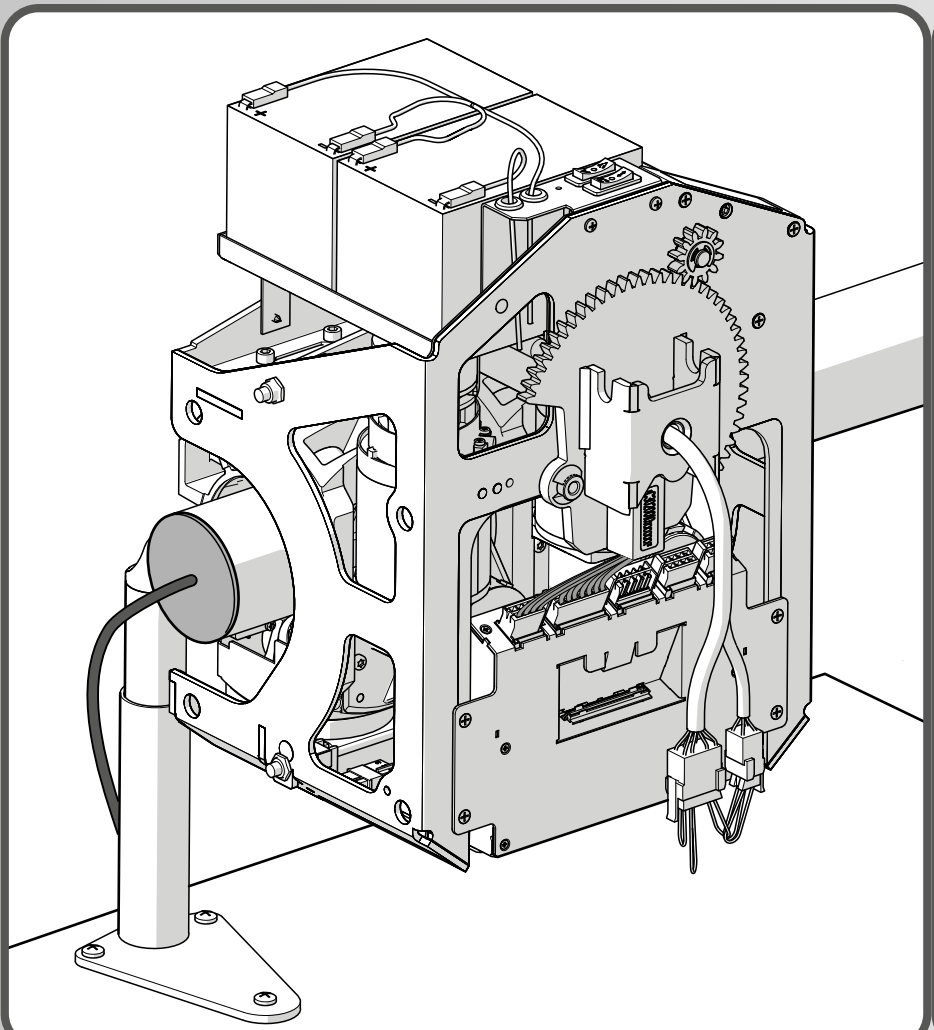

The drive unit is the same for a left and right hand stair. Independent on forward or backwards bends. This makes the unit optimized for reuse.

The unit can also be used on rails that go up and down.

The same unit can be used for a Classic/Elegance/ Alliance chair.

The unit has 2 drive motors.

The safety brake is not necessary as overspeed is impossible.

Safety covers protect that a part of the body will be injured when it gets stuck between the unit and the stairs. To release the body part, it is possible to ride the stairlift in the opposite direction.

PARTS

UNIT
BATTERIES
FOOTREST
SAFETYBELT
BODY HARNESS
ARMREST
SWIVEL
CONTROL
USER INTERFACE
KEY SWITCH
STOP BUTTON
REMOTES
POWER SUPPLY
RAIL
CHARGING POINTS

THE BATTERIES

3D-VIEW

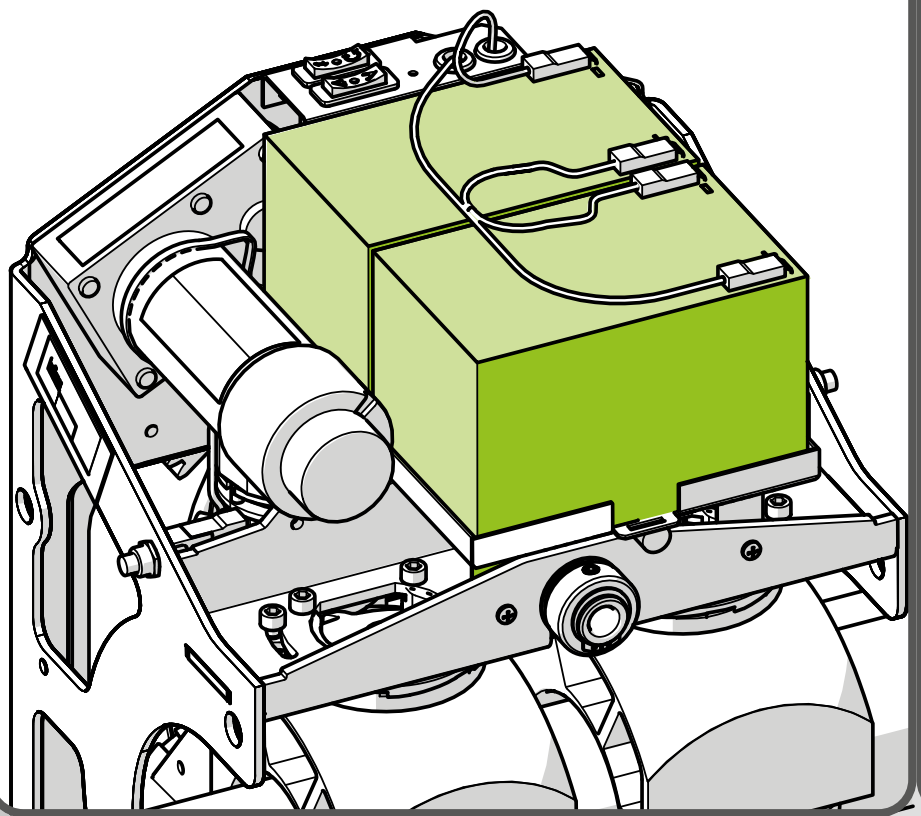

The unit has 2 batteries of 12 V=. The expected useful life of the batteries is 3 years, depending on the usage intensity and the conditions.

Lifts with rails shorter as 29.5 ft have 8 Ahr batteries ***(Handicare Freecurve)***, lifts with rails longer as 9-meter have 12 Ahr batteries ***(Handicare Freecurve Extra power)***. Long and intensive used lifts have a 20 Ahr battery ***(Handicare Freecurve Ultra power)***.

Reliable: no problems in the event of a temporary power cut, a number of 10 trips are always still possble.

Safeguard prevents “half trips”; the lift will not operate in the event of insufficient power to complete the trip, and consequently becoming stranded half-way is impossible.

The lift is stand by for 28 days when the lift is not used and not charged.

Power consumption less than 6 Dollar a year.

As an option the lift can be supplied with a Ultra Power Kit (LiFePo-batterie). The lift can ride 2297 ft without charging (see chap. EXTRAS).

THE FOOTREST_*folding*

3D-VIEW



Manual folding.

Powered and illuminated footrest on the Classic, Elegance and Alliance seat is an option.

Folding mechanism also functions if the chair is in a swiveled position.

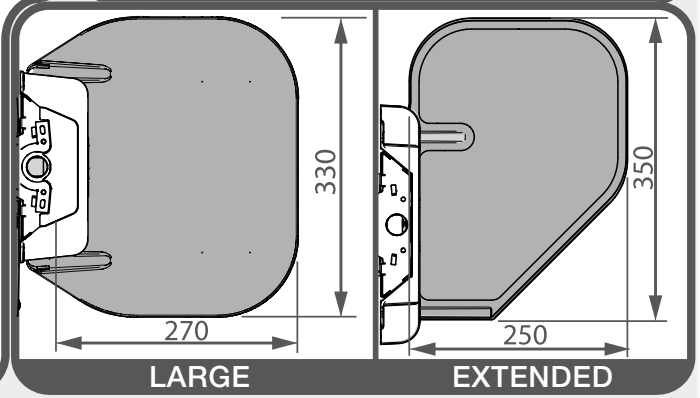

- Optional the powered & illuminated footrest (see OPTIONS).
- The height and angle of the footplate can be adjusted, by the screws on the backside of the footrest.
- Users must be of a physical size that matches the set-up of the seat such that they are able to rest their feet on or above the footrest when in the seated position.

PARTS

UNIT
BATTERIES
FOOTREST
SAFETYBELT
BODY HARNESS
ARMREST
SWIVEL
CONTROL
USER INTERFACE
KEY SWITCH
STOP BUTTON
REMOTES
POWER SUPPLY
RAIL
CHARGING POINTS

handicare

THE FOOTREST_*dectection*

3D-VIEW

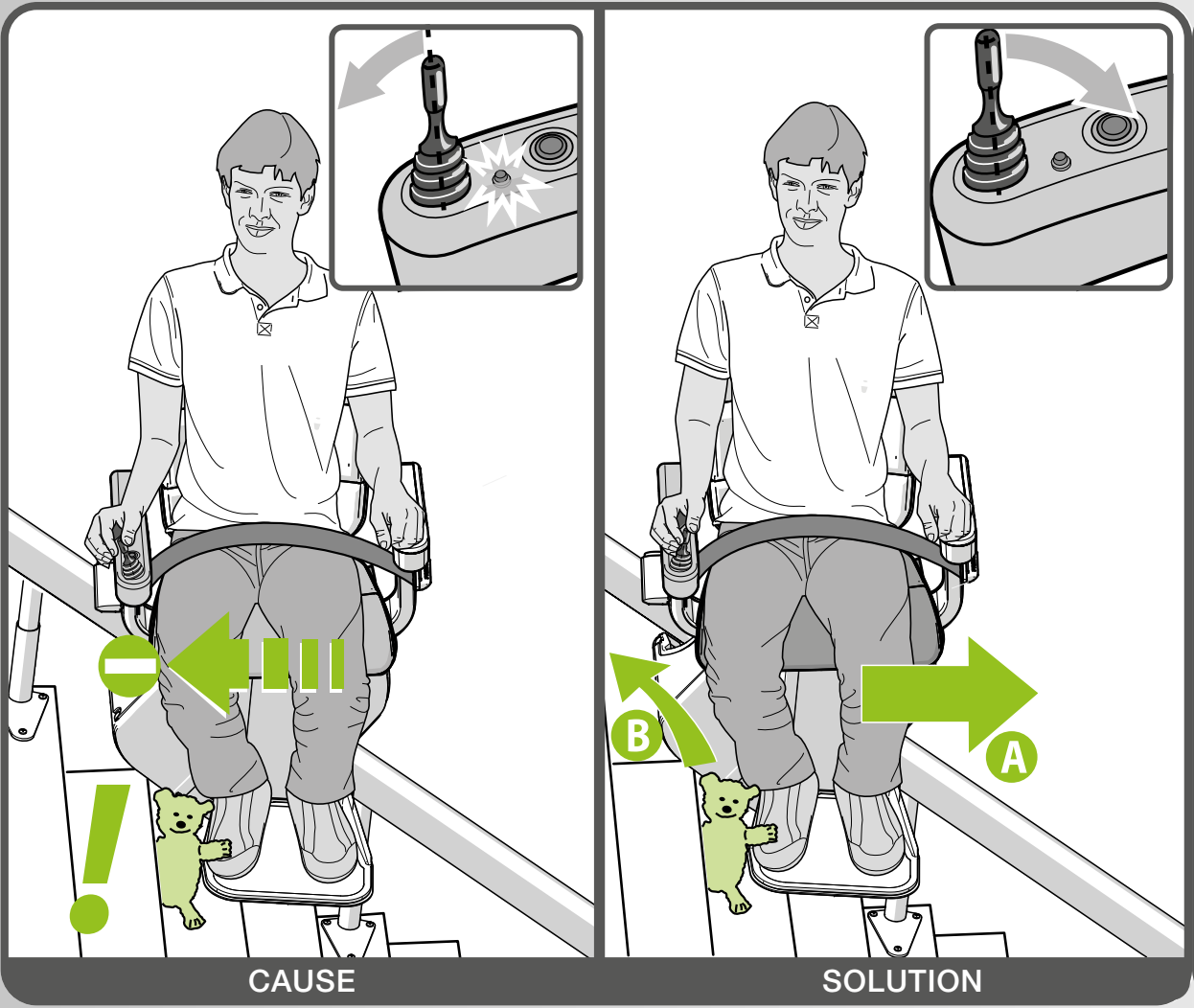

Footrestdetection:

- Both sides
- Frontside
- Underside
- Underside when folded

The LED in the armrest will blink when the joystick is operated in the blocked direction.

The stair lift stops automatically in the event that an object becomes jammed between the footrest and the stairs.

The stair lift can move again only once the control on the chair or the remote control has been used to move the lift in the opposite direction and the obstacle has been removed.

Optional the powered & illuminated footrest (see options).

THE SAFETY BELT

3D-VIEW

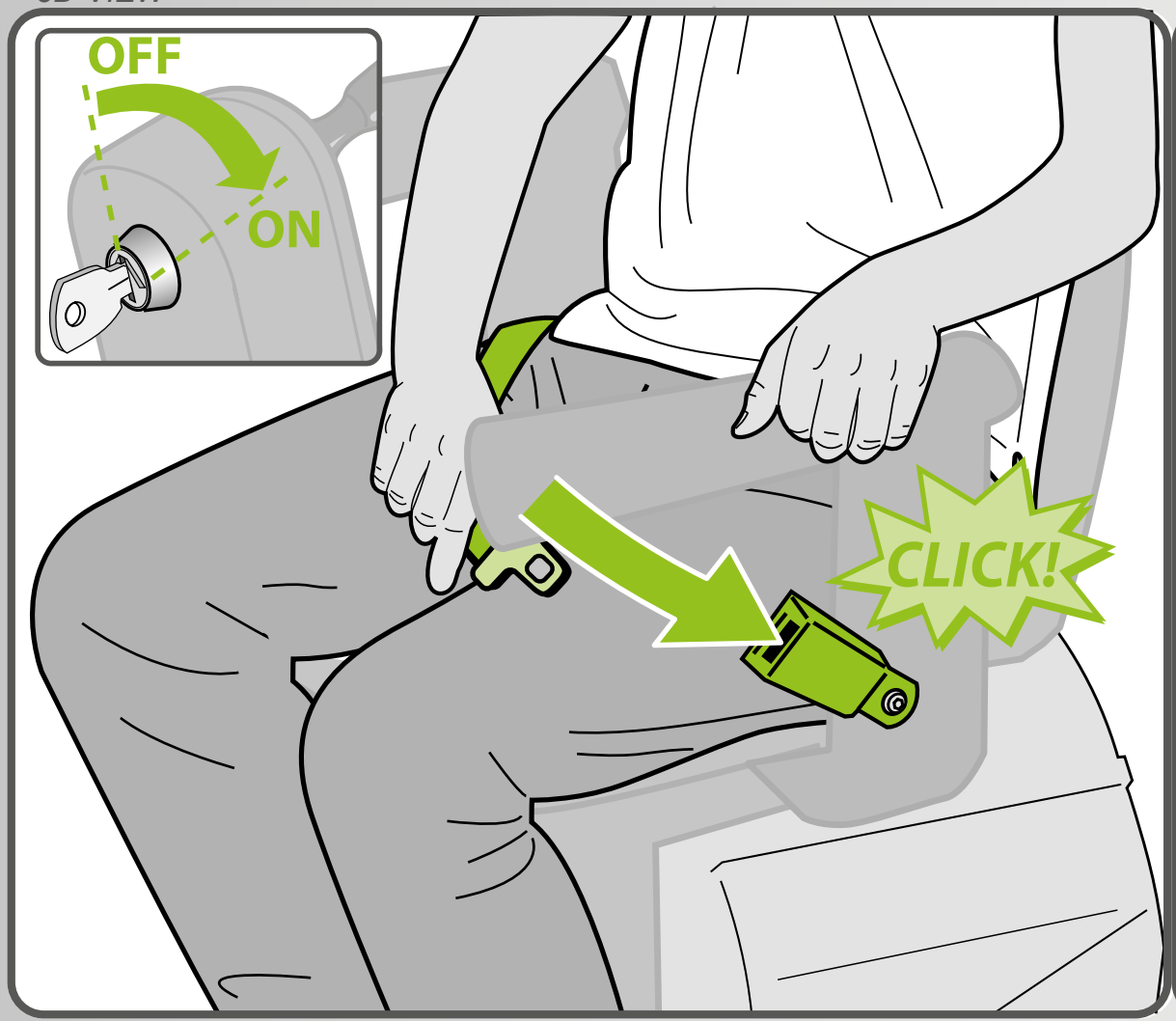

The safety belt is supplied on every lift.

The safety belt should be used during every trip. It is pulled over in front of the user, and secured in the clip.

The Classic, Elegance and Alliance seat have a retractable seat belt

The Classic seat has a H-fixation as an option.

The safety belt is electronically controlled; the lift will not run on the joystick, when the belt is not closed.

PARTS

UNIT
BATTERIES
FOOTREST
SAFETYBELT
BODY HARNESS
ARMREST
SWIVEL
CONTROL
USER INTERFACE
KEY SWITCH
STOP BUTTON
REMOTES
POWER SUPPLY
RAIL
CHARGING POINTS

THE RETRACTABLE SAFETY BELT

3D-VIEW

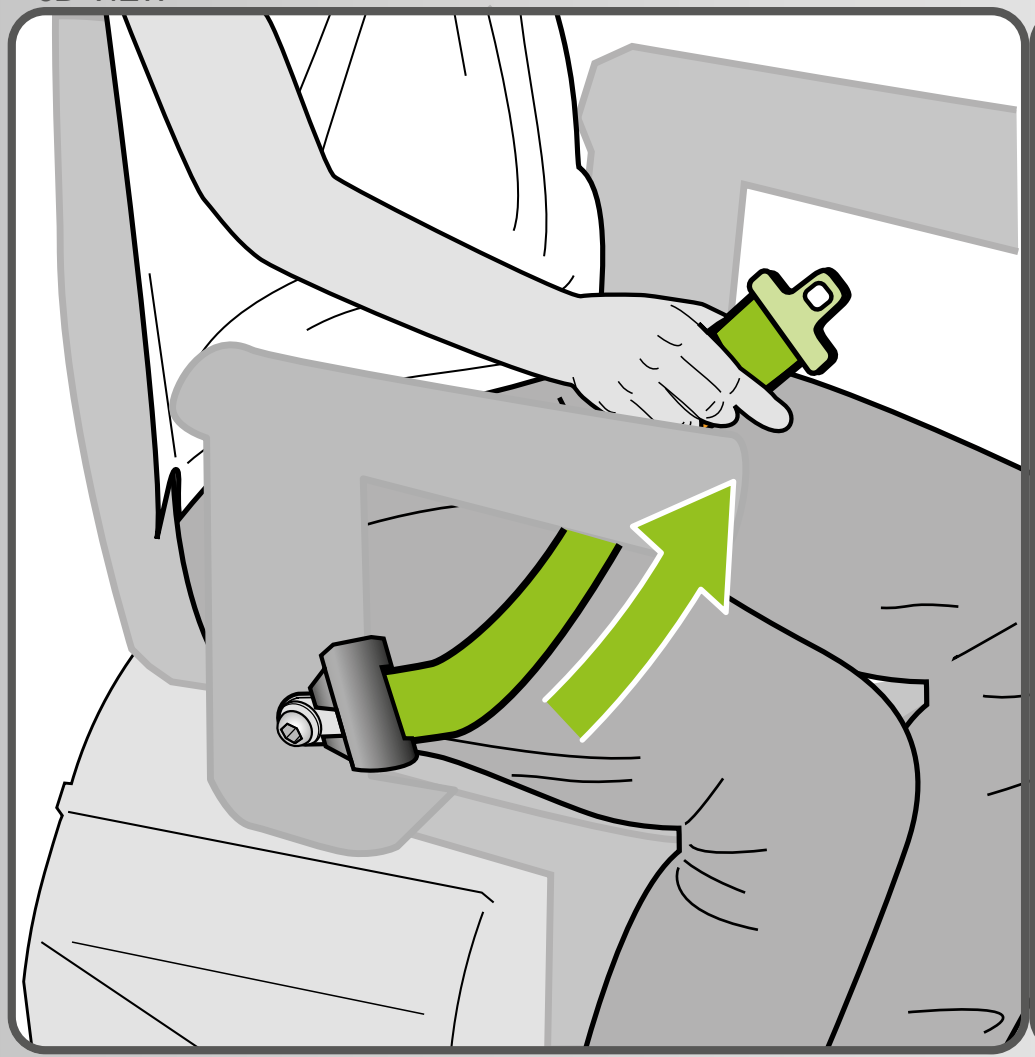

The retractable safety belt is a model designed especially, whereby an ingenious pawl mechanism prevents the belt from extending once it has been secured in the buckle.

The retractable safety belt has a safety, which prevents the user to tilt with low speed movement. There is no delay between bending forwards and pulling straight the retractable safety belt.

The retractable safety belt is of the roll up type so in the unused situation there are no parts left about.

The retractable safety belt automatically adjusts to the user, so the lift can be used by persons of different size.

The position of the buckle and the holder is adjustable for each user.

PARTS

UNIT
BATTERIES
FOOTREST
SAFETYBELT
BODY HARNESS
ARMREST
SWIVEL
CONTROL
USER INTERFACE
KEY SWITCH
STOP BUTTON
REMOTES
POWER SUPPLY
RAIL
CHARGING POINTS

THE BODY HARNESS

3D-VIEW



The body harness is available for those who may require extra support and stability as they ride the stairlift. Designed for comfort, the curved design makes the harness more comfortable to wear by taking into account one's body shape. Each harness is equipped with adjustable straps to ensure a safe, secure and comfortable fit.

The body harness is available on the Freecurve Alliance and Elegance seat.
This soft texture zip harness is supplied in three sizes based on the user's shoulder width.

The body harness is not a standard option on the Freecurve and can only be ordered as a kit in our webshop.

Small: 11 - 13 inches
Medium: 13 - 16,1 inches
Large: 16,1 - 18,9 inches



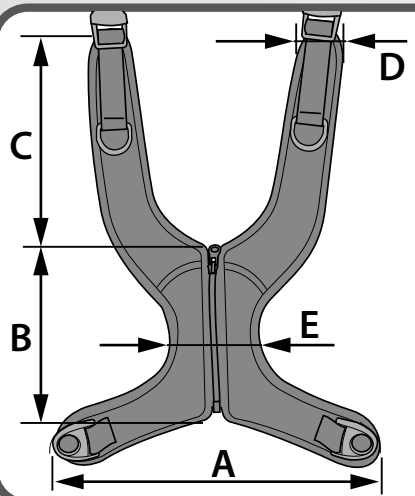

	S	M	L
A	9"	12"	15"
B	5.5"	7"	8.5"
C	6.5"	8"	9"
D	1.75"	1.75"	2.25"
E	4.75"	5"	5.25"

THE ARMREST

3D-VIEWS

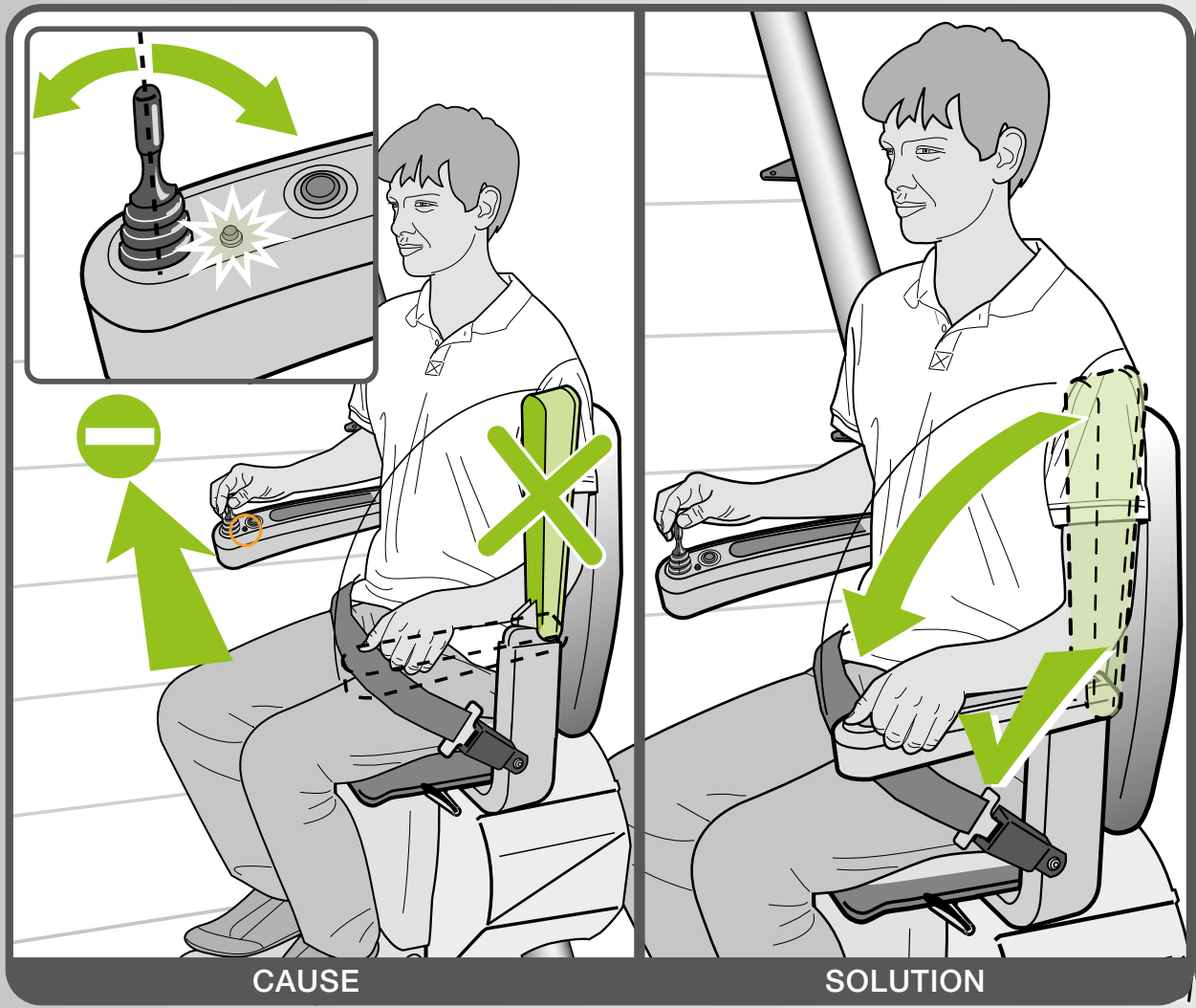

The stairlift has 2 armrests:

- One armrest with control (joy-stick, key switch, indication LED and emergency stop).
- One shorter armrest without control.

By swapping over both armrests the chair can be used on smaller staircases.

The control on the chair has priority over remotes, so the user is always in control.

The chair won't operate from the chair when the armrests are not unfolded (the LED in the armrest remains fainted).

On the remotes the lift will also function when the armrest are folded.

PARTS

UNIT
BATTERIES
FOOTREST
SAFETYBELT
BODY HARNESS
ARMREST
SWIVEL
CONTROL
USER INTERFACE
KEY SWITCH
STOP BUTTON
REMOTES
POWER SUPPLY
RAIL
CHARGING POINTS

THE MANUAL SWIVEL

3D-VIEW

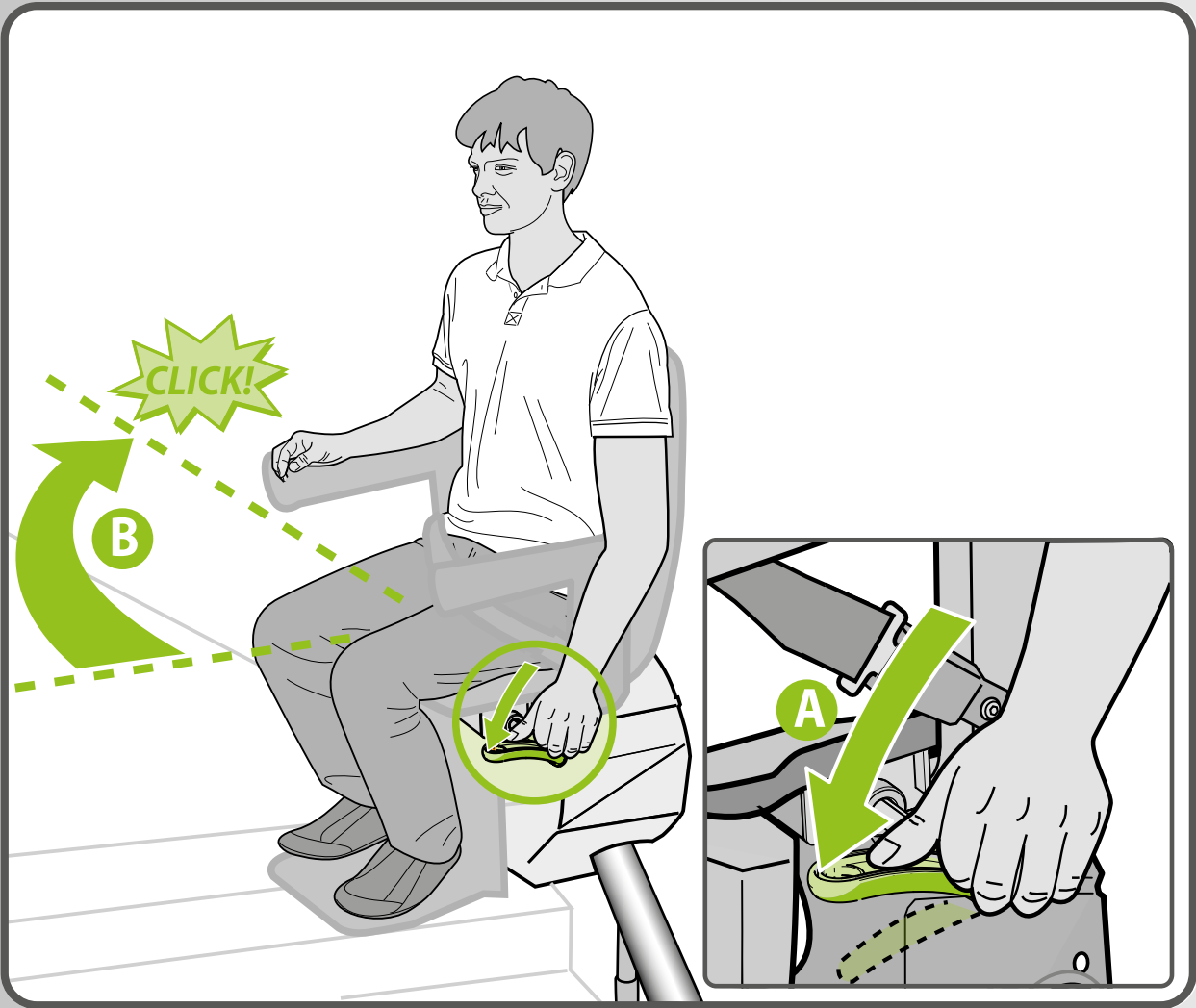

A manual version is available on all types of chairs.

The chair can swivel centric in two directions (Classic, Elegance and Alliance seat) (0°, 45°, 85°). So it can swivel at the top and bottom of the stairs.

The lift does not travel in either direction when it is not in a locked position. In that situation the LED in the armrest will blink when operating the control.

Optional the AutoSwivel (see OPTIONS).

PARTS

UNIT
BATTERIES
FOOTREST
SAFETYBELT
BODY HARNESS
ARMREST
SWIVEL
CONTROL
USER INTERFACE
KEY SWITCH
STOP BUTTON
REMOTES
POWER SUPPLY
RAIL
CHARGING POINTS

THE CONTROL

3D-VIEWS

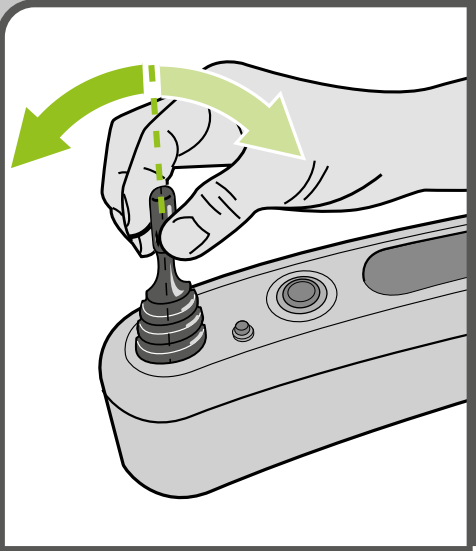

ELEGANCE/ALLIANCE

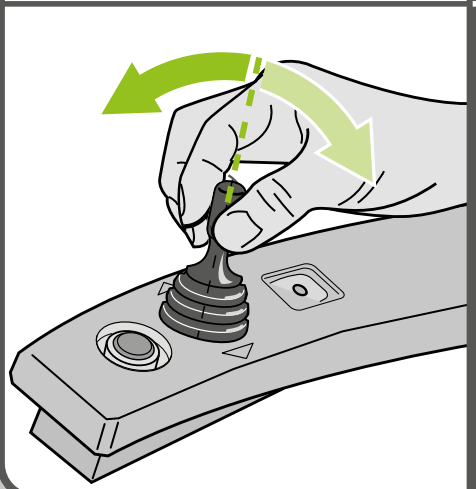

CLASSIC

The chair moves in the direction selected with the control on the chair. The chair lift stops automatically if the control on the chair is released (dead man's handle).

Flexible joystick (Classic / Elegance / Alliance seat).

Operable independant of handicap.

No obstructions for clothing.

No pinning hazard by sitting down and standing up.

No damage by violence or transport.

The control on the chair has priority over the wall buttons, so the user is always in control.

One control for more functions, run of the lift, folding hinge, powered swivel.

PARTS

UNIT
BATTERIES
FOOTREST
SAFETYBELT
BODY HARNESS
ARMREST
SWIVEL
CONTROL
USER INTERFACE
KEY SWITCH
STOP BUTTON
REMOTES
POWER SUPPLY
RAIL
CHARGING POINTS

THE USER INTERFACE

3D-VIEW



Led indication

- *Off*: keyswitch is off.
- *Dimmed*: no signal from the control on the chair or remote.
- *Illuminated*: the control on the chair or remote is used.
- *Blinks when control is used*: the desired direction of movement is blocked.
- *Blinks when control is not used*: no charging.

Beep:

- 3 beeps before start.
- 3 minutes beep when not charging.

PARTS

UNIT
BATTERIES
FOOTREST
SAFETYBELT
BODY HARNESS
ARMREST
SWIVEL
CONTROL
USER INTERFACE
KEY SWITCH
STOP BUTTON
REMOTES
POWER SUPPLY
RAIL
CHARGING POINTS

THE KEY SWITCH

3D-VIEWS

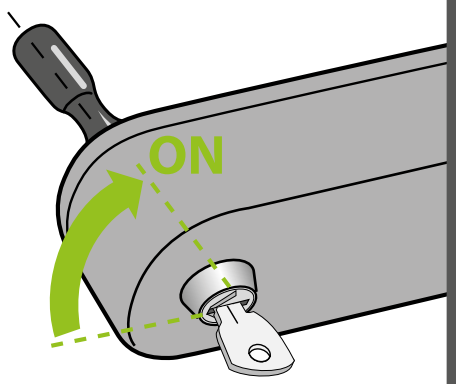

ELEGANCE/ALLIANCE

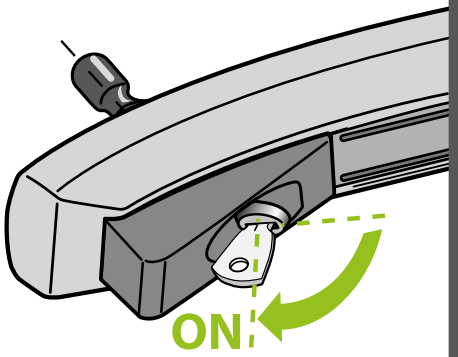

CLASSIC

The key-operated switch is a standard fitting in the armrest, and is provided with 2 keys. Extra keys can be ordered from Handicare.

When the key-operated switch is in the “I” position the stair lift can be operated using the control on the chair or the remote control. The key can be removed when the switch is in this position.

When the key-operated switch is in the “0” position the stair lift cannot be operated by either the control on the chair or the remote control. The key can be removed when the switch is in this position.

The battery will also continue to charge when the key-operated switch is in the “0” position.

Optional the Keyswitch for a Classic/Elegance/Alliance seat can be adjusted for a public building e.g. the key switch does not switch of the remotes.

PARTS

UNIT
BATTERIES
FOOTREST
SAFETYBELT
BODY HARNESS
ARMREST
SWIVEL
CONTROL
USER INTERFACE
KEY SWITCH
STOP BUTTON
REMOTES
POWER SUPPLY
RAIL
CHARGING POINTS

THE STOP BUTTON

3D-VIEW



The Classic, Elegance and Alliance chair have an stop button in the armrest.

In case of emergency this button can be pushed and than switches off the manoeuvre in the armrest and the remotes.

The lamp in the stop button lights up red.

If you push the button again, the lift will be released.

PARTS

UNIT
BATTERIES
FOOTREST
SAFETYBELT
BODY HARNESS
ARMREST
SWIVEL
CONTROL
USER INTERFACE
KEY SWITCH
STOP BUTTON
REMOTES
POWER SUPPLY
RAIL
CHARGING POINTS

THE REMOTES

3D-VIEW

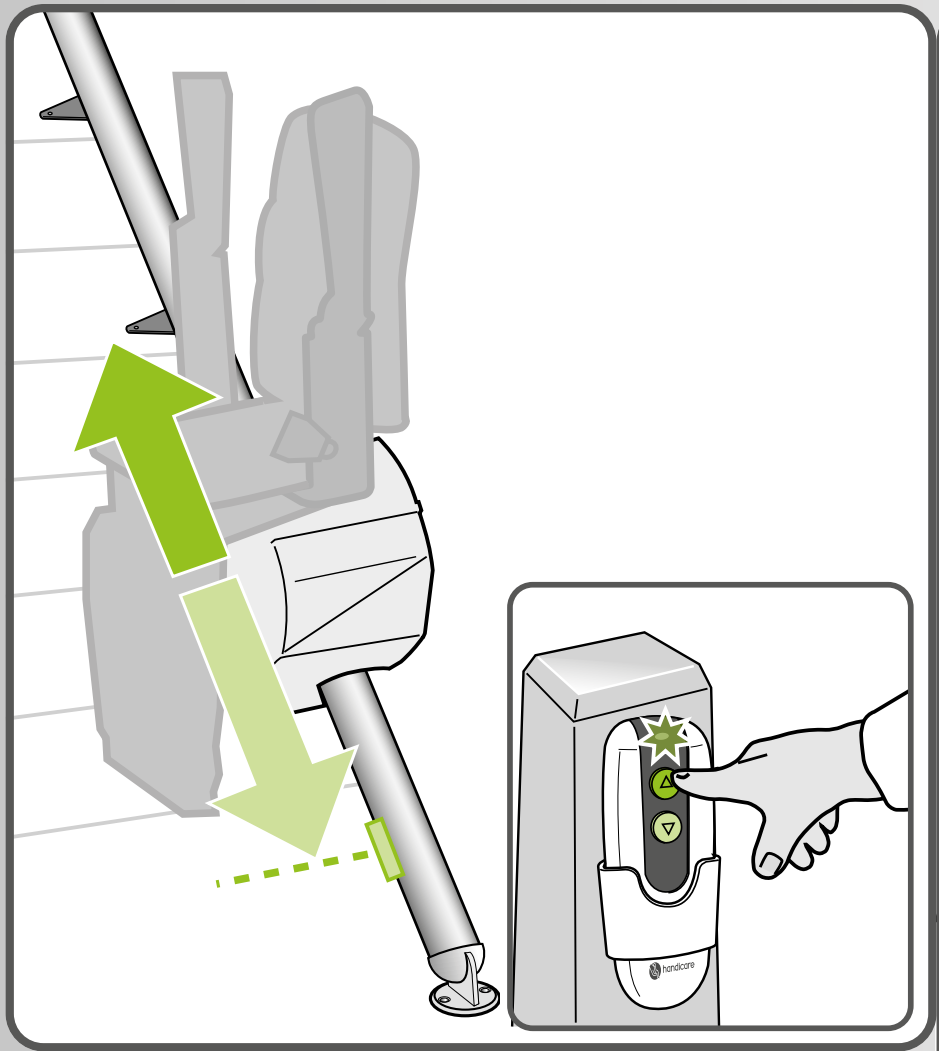

The remote control has a button “up” and a button “down” and must be kept pressed to operate the chair lift.

The unit is a radiographic control, and operates at a transmission frequency of 915 Mhz (optional 2,4 Ghz).

The keyswitch on the seat switches off the remotes.

For a longer reach, repeaters are available (optional). When a stairs has 4 floors or more, these are standard part of the delivery

PARTS

UNIT
BATTERIES
FOOTREST
SAFETYBELT
BODY HARNESS
ARMREST
SWIVEL
CONTROL
USER INTERFACE
KEY SWITCH
STOP BUTTON
REMOTES
POWER SUPPLY
RAIL
CHARGING POINTS

THE POWER SUPPLY

3D-VIEW

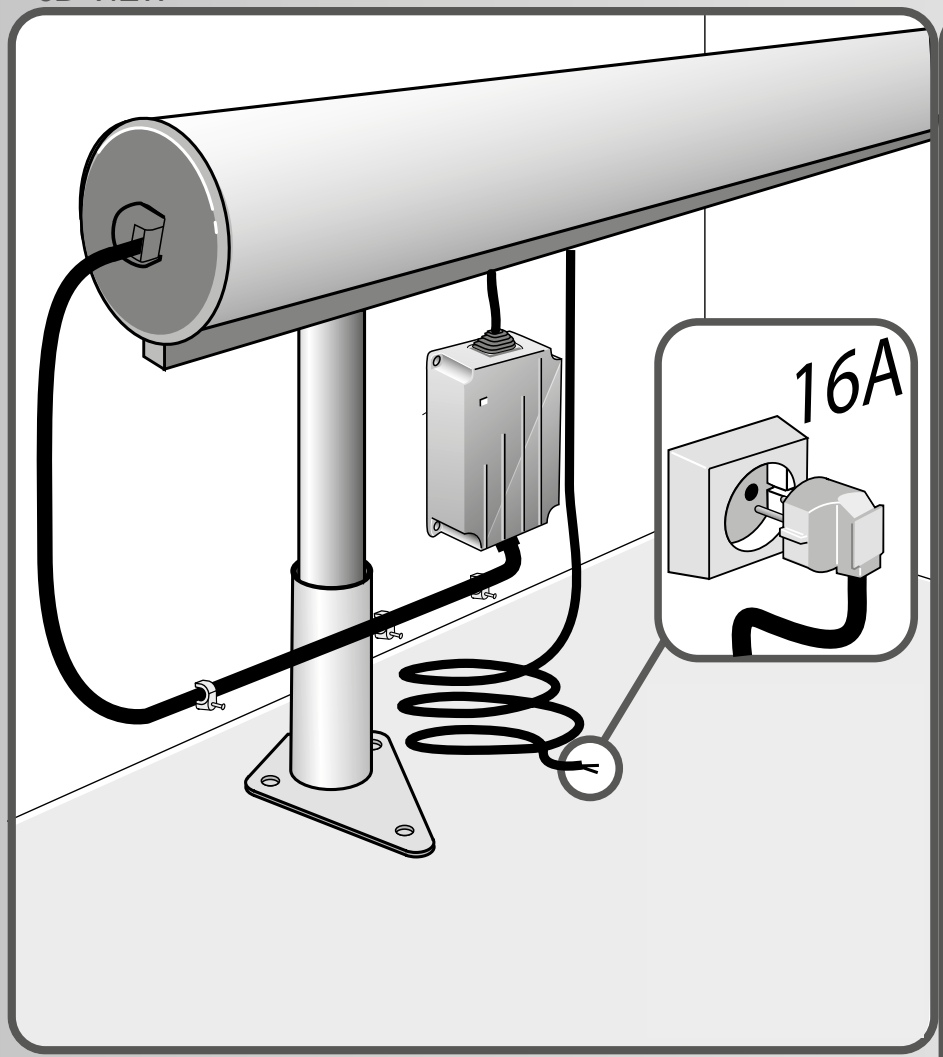

The installation of electrical equipment and wiring shall conform to the requirements of NEC and ANSI/NFPA70. Cable length maximum 6 ft.

The stair lift's power supply is obtained from a wall socket located at an overall distance of no more than 4 metres from the top or the bottom end of the rail.

The battery-charger's power supply is always connected to the top end of the rail when the unit is equipped with an electrically-operated folding rail.

A rail longer than 49.2 ft is supplied with two battery chargers. One is connected upstairs, the other one is connected downstairs.

The dealer will fit a plug to the battery-charger's power cable which complies with the local regulations.

The installation is not earthed.

The power consumption of the battery charger is 36 Watt. Consequently the installation of a separate group is not required.

The dealer is responsible for compliance with the local regulations applicable to the electrical installation.

PARTS

UNIT
BATTERIES
FOOTREST
SAFETYBELT
BODY HARNESS
ARMREST
SWIVEL
CONTROL
USER INTERFACE
KEY SWITCH
STOP BUTTON
REMOTES
POWER SUPPLY
RAIL
CHARGING POINTS

THE RAIL

3D-VIEW

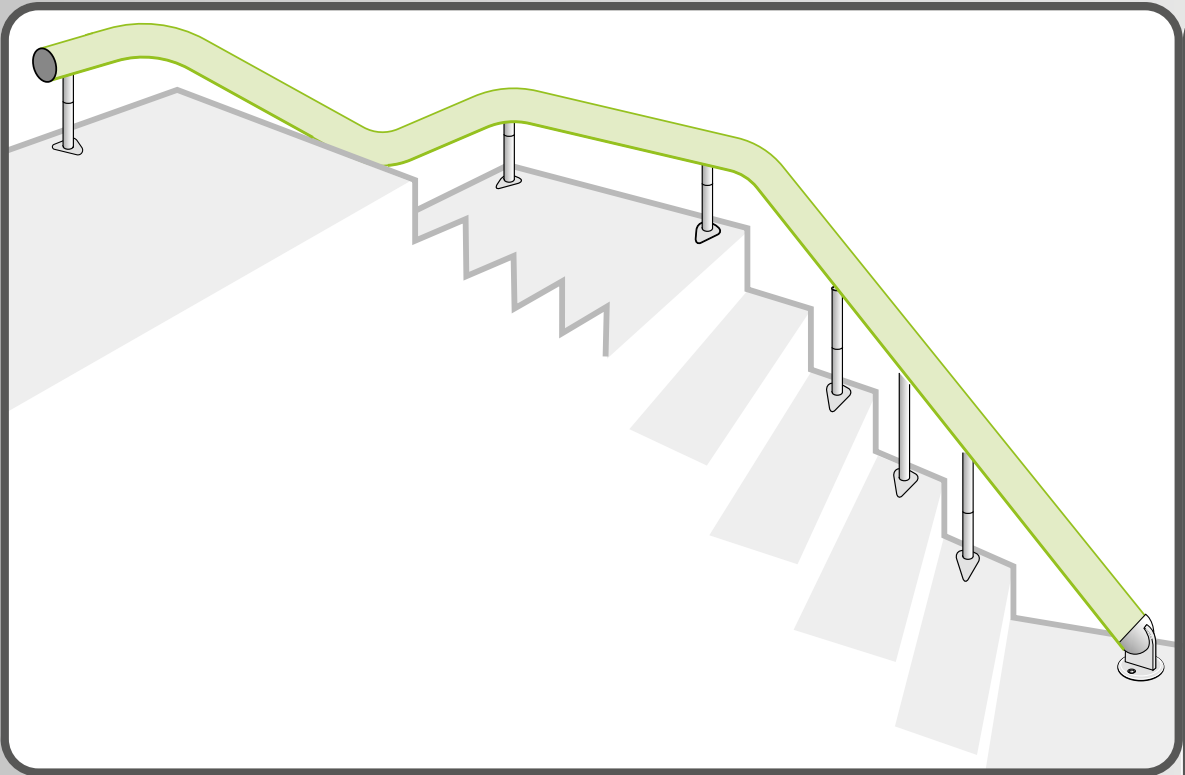

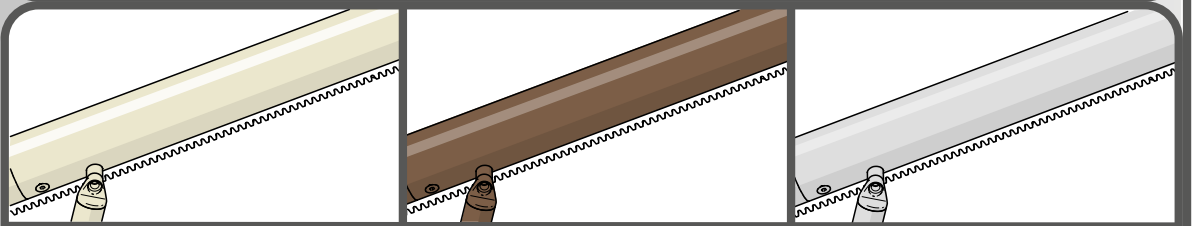

CRÈME | BROWN | GREY

The rail is one tube with a diameter of 2.99 inch fixed with supports on the floor and the steps.

The rail is delivered in 3 colours:

- RAL 1013 crème
- RAL 8024 brown
- RAL 7047 grey

Other RAL colours are availbale on demand for an upcharge price and longer delivery time.

A chrome rail is available as an option, consult Handicare dealer service for price and delivery time.

The tooth rack is covered so no chance on injury and grease on clothes.

Optional the hinged rail (see OPTIONS).
Go to attachments to see how to mount the rail in partical situations.

PARTS

UNIT
BATTERIES
FOOTREST
SAFETYBELT
BODY HARNESS
ARMREST
SWIVEL
CONTROL
USER INTERFACE
KEY SWITCH
STOP BUTTON
REMOTES
POWER SUPPLY
RAIL
CHARGING POINTS

THE CHARGING (STOP) POINTS

TOP VIEW

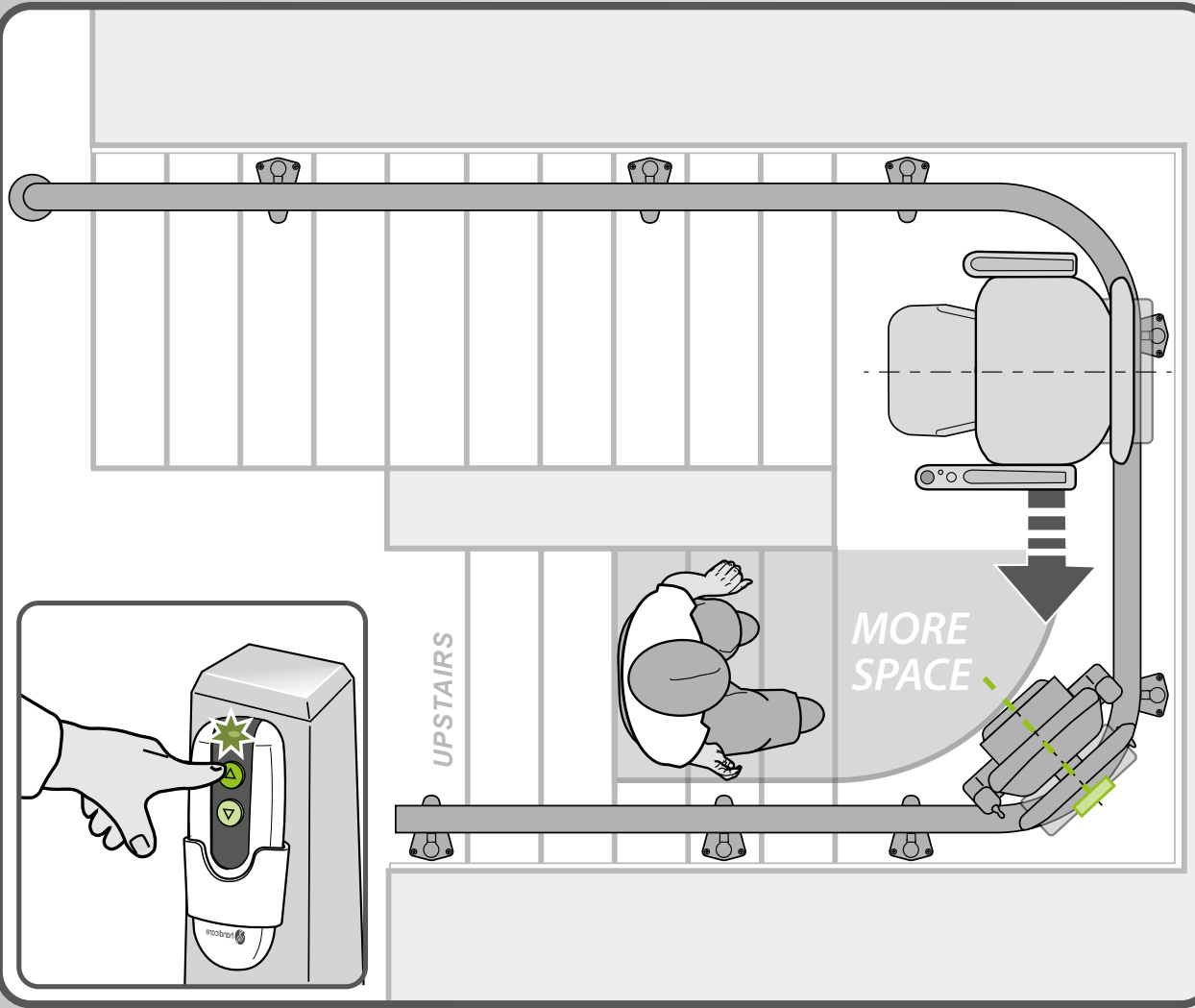

Stop/charging point
The lift stops at this point when the lift is being controlled with the control on the chair to be able to exit.

The lift stops on every (charge) stoppoint when called or send by the remote controls.

EasyPark:
If the joystick is released within 2 inch before the official stop position, the lift will continue to drive to that stop position.

PARTS
UNIT
BATTERIES
FOOTREST
SAFETYBELT
BODY HARNESS
ARMREST
SWIVEL
CONTROL
USER INTERFACE
KEY SWITCH
STOP BUTTON
REMOTES
POWER SUPPLY
RAIL
CHARGING POINTS

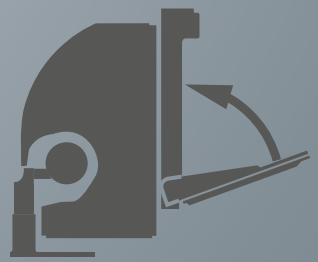

Options

THE POWERED FOOTREST_*(un)folding*

3D - VIEW



The option is available for the Classic, Elegance and Alliance seat.

The powered footrest option enables the end user to fold/unfold the footrest automatically.

The folding of the footrest can be done on any position of the rail.

The operation of the folding mechanism is done by a bi-stabile button at the outside of the armrest (right operation) and on the inside of the armrest (left operation). (Up is up and down is down). The Classic seat has a button on the underside of the armrest.

The powered option is available for standard, large and off-set footrest.

The powered footrest option is available for new installations. and existing installations by exchanging the complete seat.

THE POWERED FOOTREST_*illuminated*

3D - VIEW

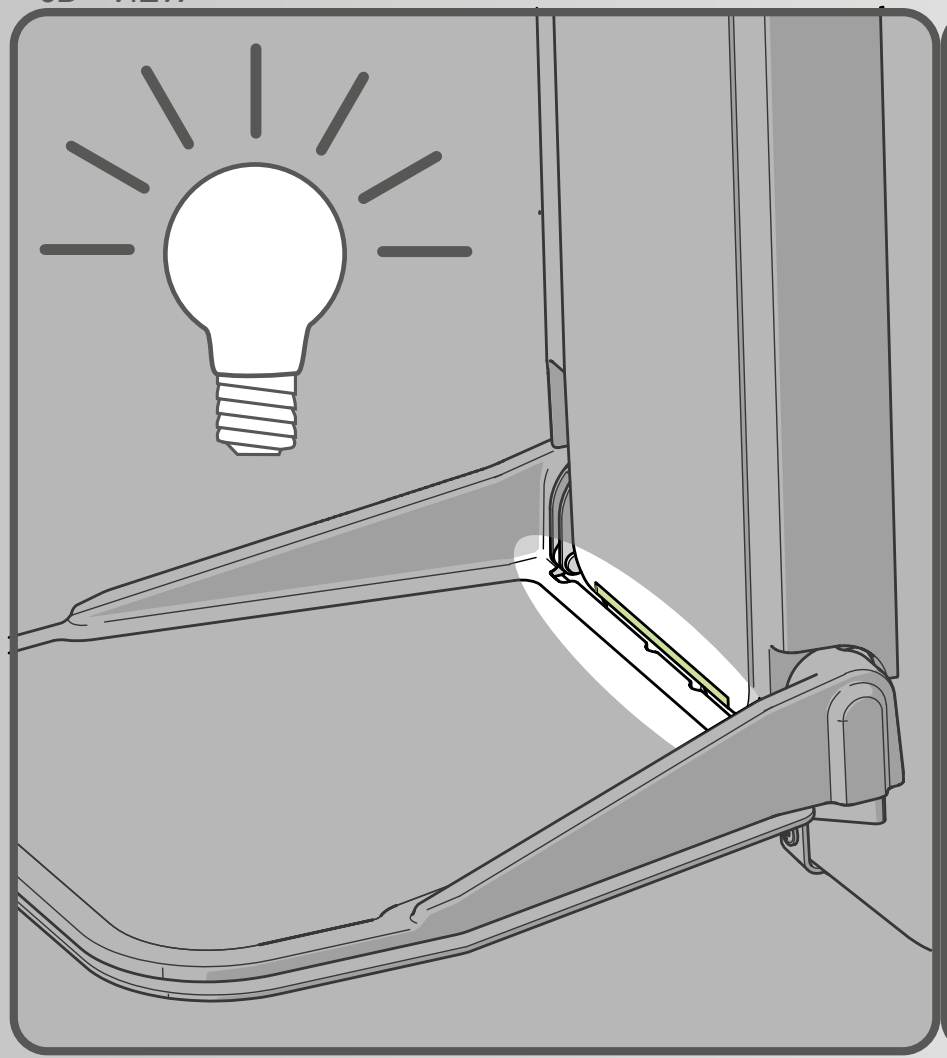

The footrest illumination option enables all stair users to identify the footrest when it is in the unfolded position.

The illumination is just above the footrest and lights the footrest surface.

The footrest illumination is “on” when unfolded and “off” when folded.

The footrest illumination is standard for all lifts with powered footrest.

It can be decided by the engineer to (de)-activate the option by disconnecting the LED connector.

THE POWERED SWIVEL CHAIR

3D - VIEW

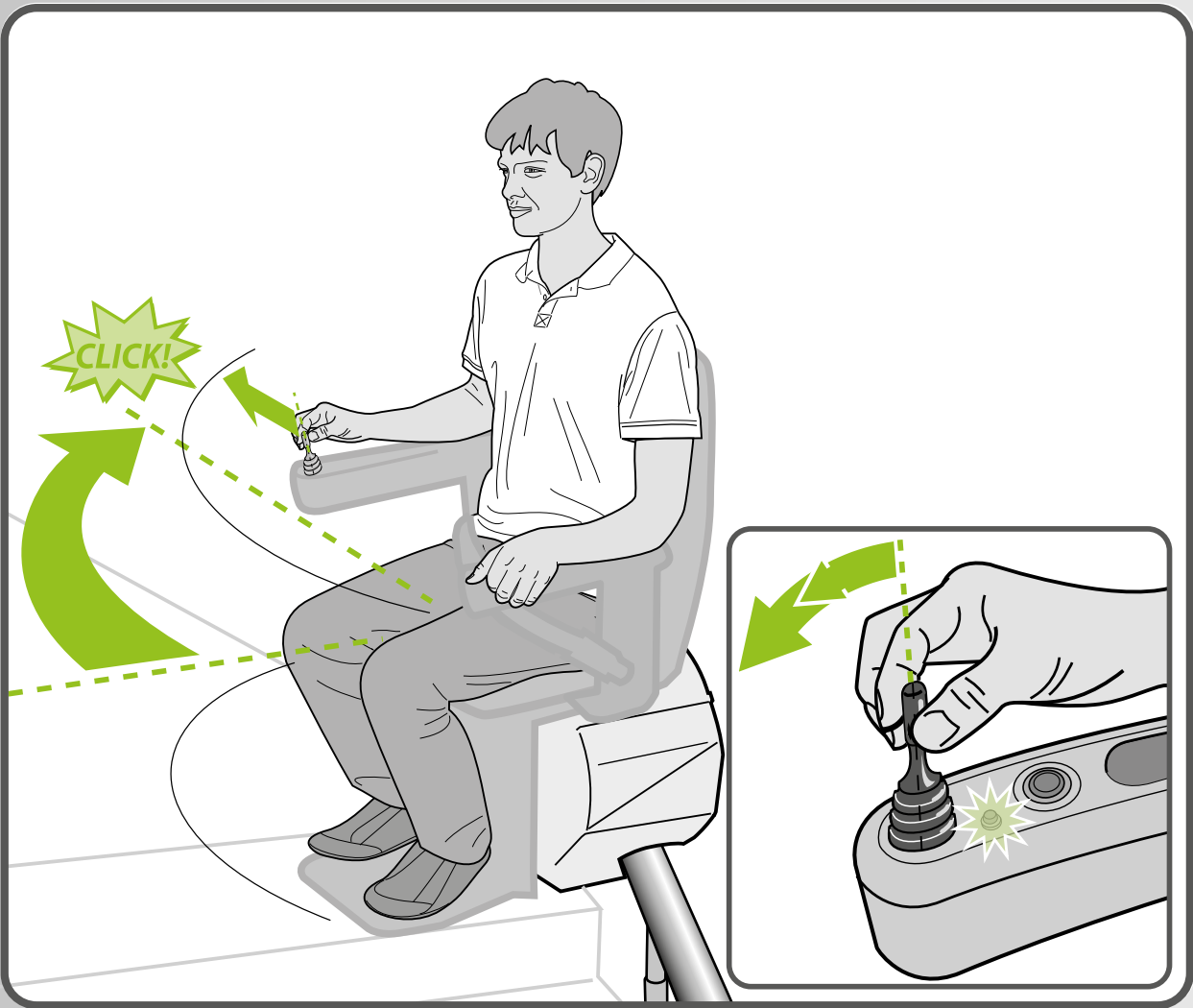

As an option the “tap**2**floor can be activated” (see chap. EXTRAS).

The powered swivel chair can be mounted on the Classic/Elegance/ Alliance chair.

The chair can swivel 45˚, 65˚, 85˚ or 90˚ and can also ride facing downwards in these positions. The positions can be changed on site by the engineer.

O*ne-way powered swivel:*
Automatic swivel at the top. The end user rides facing the opposite wall. The chair can swivel on intermediate landings towards the floor.

T*wo-way powered swivel:*
Automatic swivel at the top and the bottom of the stairs. The end user rides facing downwards. The chair can swivel on intermediate landings to a straight position. There is no overrun required on the top floor.

Minimum stairwidth 690 mm for a van Gogh and 770 mm for a Rembrandt.

The chair will automatically swivel to the straight position on a charge point when operated by the remote controls.

THE ACTIVE SEAT

3D - VIEWS





The ActiveSeat supports and follows the movements of the user when sitting down or standing up from the stairlift seat.

The spring system in the ActiveSeat can be adjusted to suit the users' weight.

Should the user activate the Active seat, the ActiveSeat will rise in the same way as a riser chair.

Should the user sit down on the ActiveSeat, the user will be supported until the user is in a comfortable sitting position and the seat locks itself.

The stairlift can only be used when the seat is locked.

A demonstrator kit (AA13220) is available on the webshop.

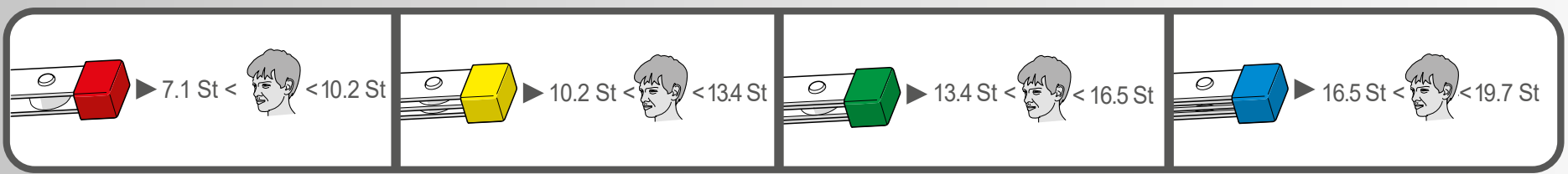

handicare

THE HINGED RAIL_*folding*

3D - VIEW

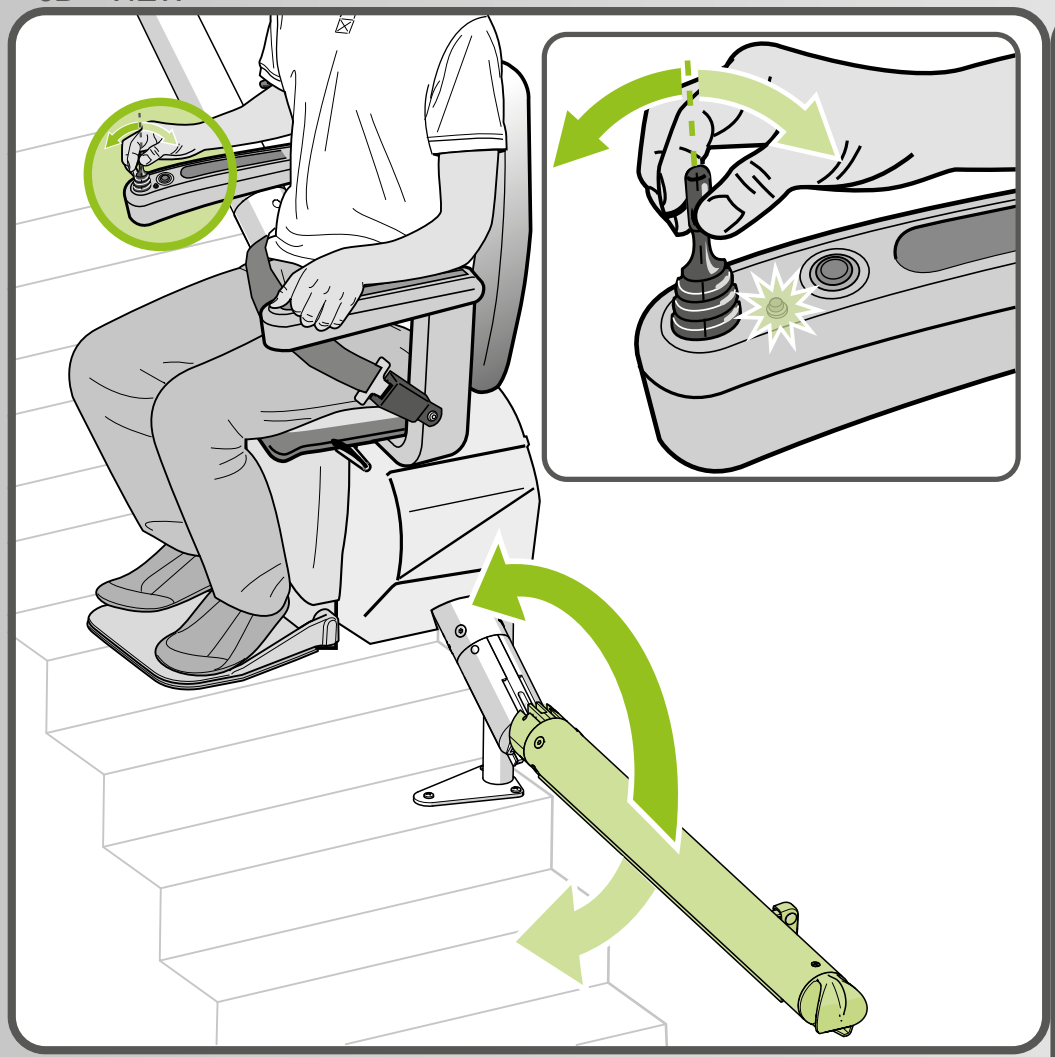

Rails terminating in front of a door can be fitted with a hinged rail which automatically folds out of the way while the chair is ascending the stairs.

The hinged rail is operated using the control on the chair or the remotes.

The distance between the rail and the wall is the same as that with a rail without a hinged rail.

The stair lift is not charged at the position where the stair lift stops whilst operating the hinged rail.

To prevent injuries caused by the hinged rail the toothbar is protected by a plastic cover which moves into place when the hinged rail is folded up. When the hinged rail is in motion an audio signal sound as a warning.

In an emergency the hinged rail can also be manually folded by placing a hand under the rail and lifting it out of the way.

Maximum weight user 19.68 Stone.

THE HINGED RAIL_*park*

3D - VIEW

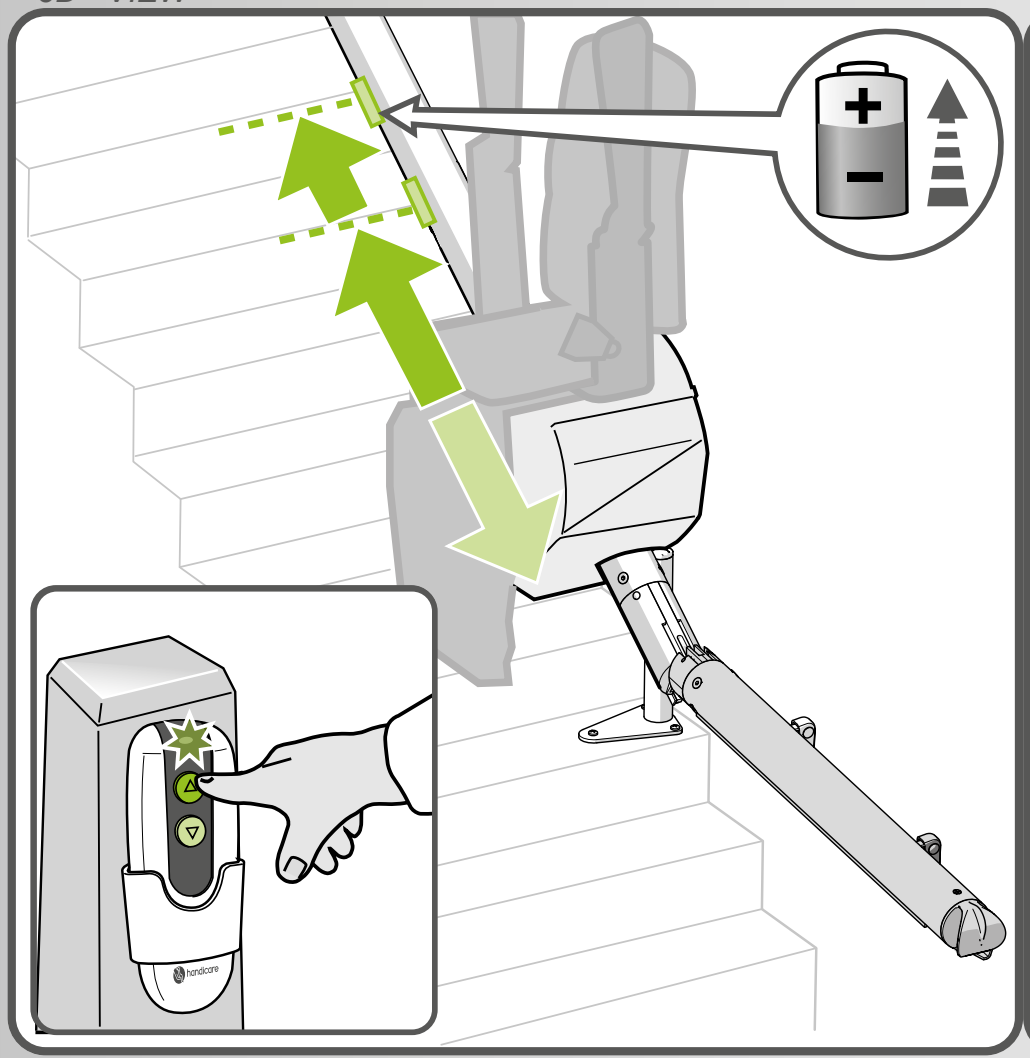

The lift is not charging when on the foldable hinge.

An extra charging station is available as an option. The stair lift stops automatically at this extra charging station when operated with the remote controls, but not when operated with the control on the chair.

The extra charging station is located above the control position of the electrically-operated foldable rail.

The surveyor specifies the position for this extra charging station.

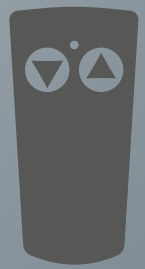

Optional extras

THE TAP2FLOOR

3D-VIEWS

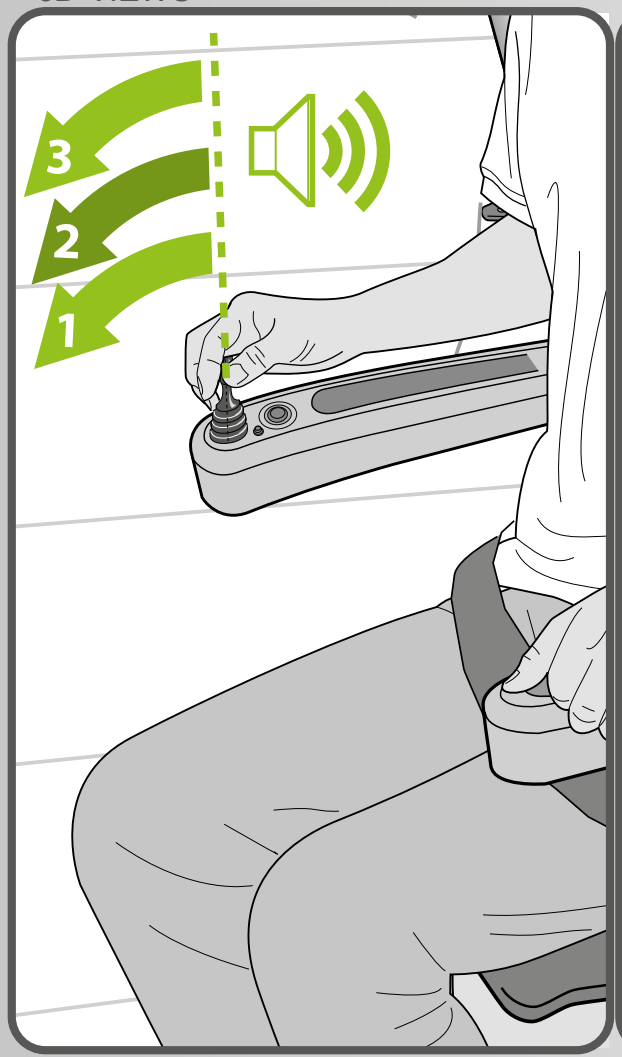

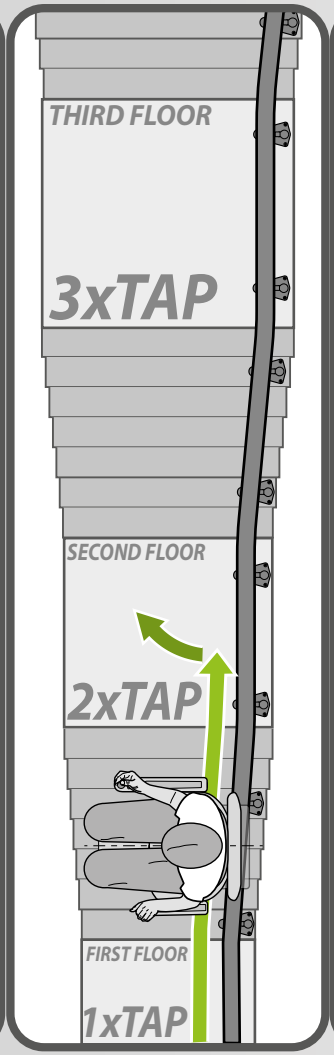

Stairlift runs on joystick without stopping on any charge/stop point after tapping (standard).

Stairlift with powered swivel can swivel automatic on a preferent intermediate landing after tapping.

Before the start of the lift, the joystick (not the remote control) is operated in the direction of travel (Tap). The number of operations (taps) indicates the desired floor.

Tapping is: pressing the joystick in the desired direction and releasing it quickly and pressing it again, etc. The LAST press (when holding the joystick to start driving) is NOT counted as a tap !!

Tapping must be done rather quickly. After each tap you hear a beeping sound. If it is done too slow it will not work, it will be ignored and treated as a normal drive (without tapping).

THE EASY CALL

3D-VIEWS



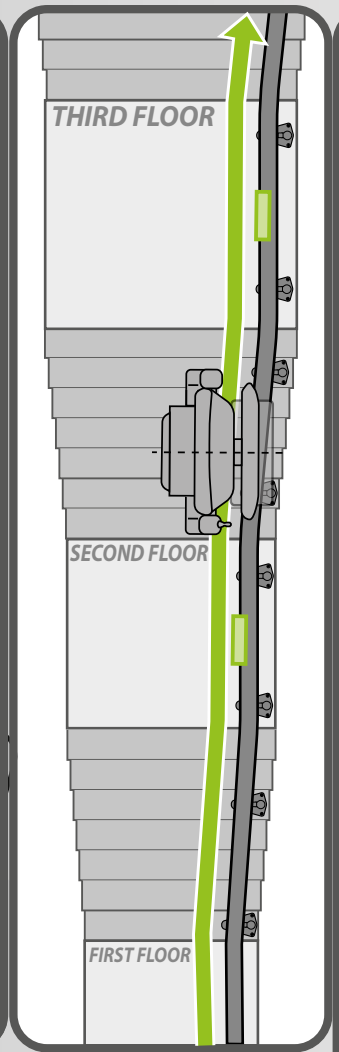

The Easy Call function is not yet an option in the USA.

ULTRA POWER KIT

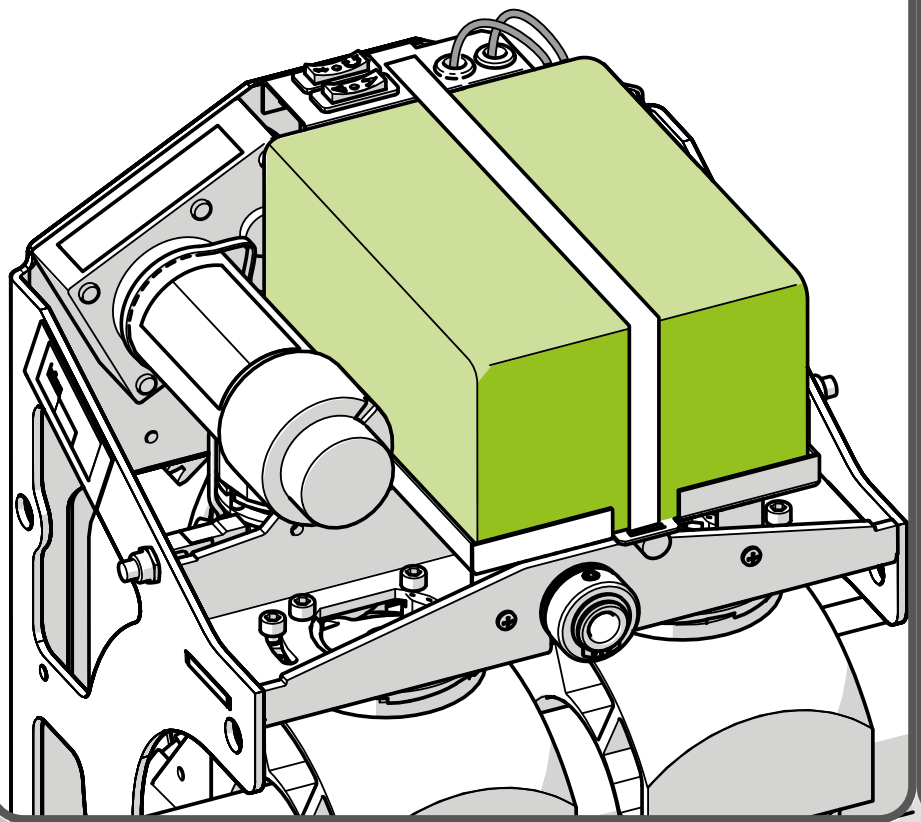

The **LiFePo** battery is an option for the Freecurve for heavy duty use.The Lift can ride 2297 ft without charging.

The option is available for the Freecurve in combination with all chairs and options.

The **LiFePo** battery is available for new installations and existing installations and can be installed by a certified engineer.

The **LiFePo** batteries require a datacard on which the option for a **LiFePo** battery is enabled. If on a unit with standard batteries, the batteries are replaced by **LiFePo** batteries, the datacard should be replaced.

The **LiFePo** batteries only function with a dedicated charger (C2010520).

HANDRAIL

TOP VIEW

HANDGRIPS

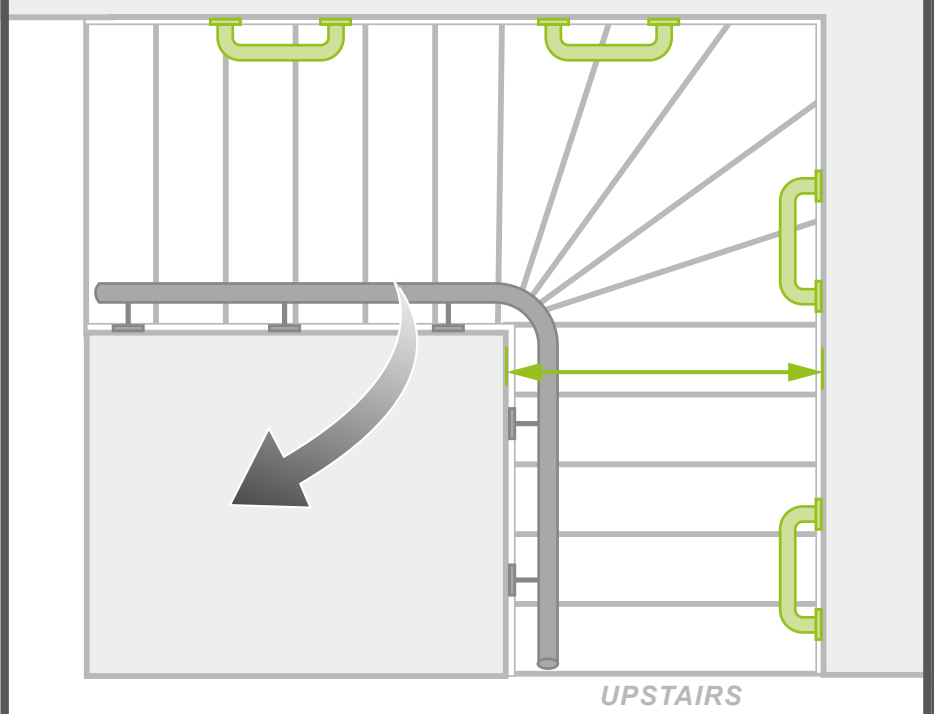

TOP VIEW

BANISTER

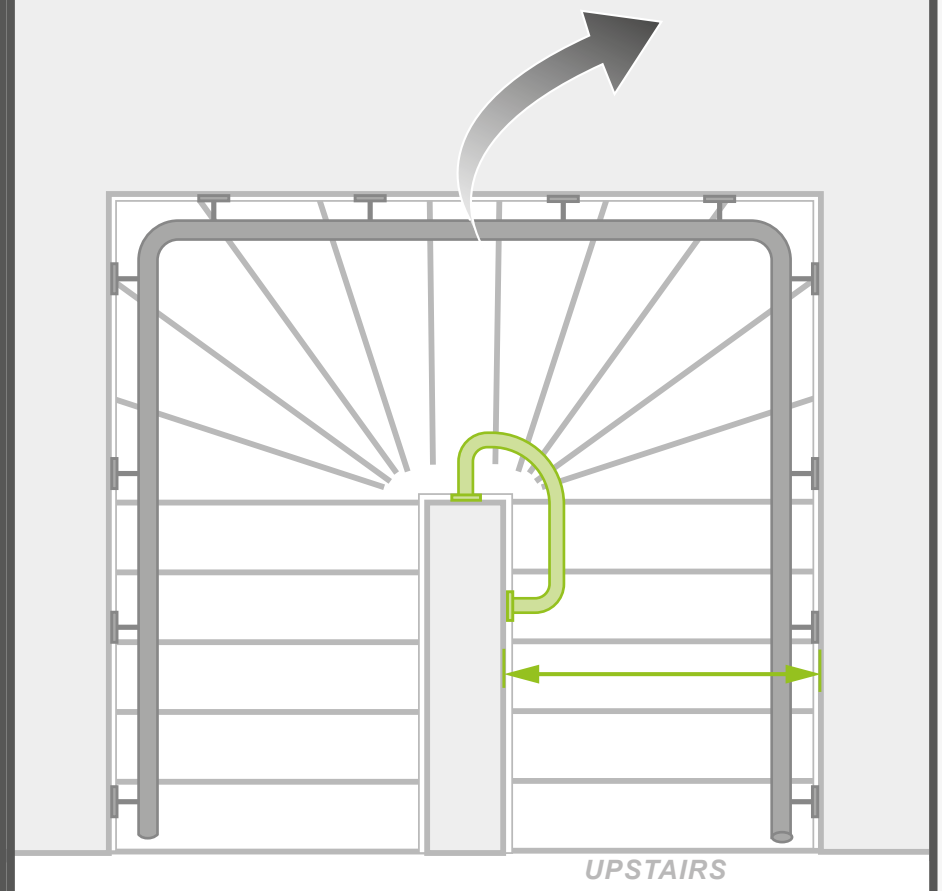

If the handrail is removed to get more space on the stairs we advise to install on the opposite wall:

- A handrail
- Handgrips or brackets
- In case of a newal post on the inside you can install a special stair banister ***11K00009*** (Left) or ***11K00010*** (Right) (available on www.handicarepartners.com)

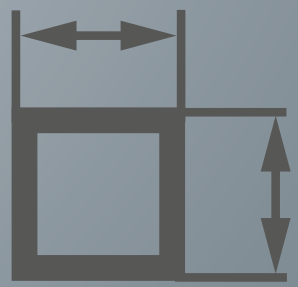

Dimensions

DIMENSIONS_*classic*

TOP VIEW - SIDEVIEW - FRONT VIEW

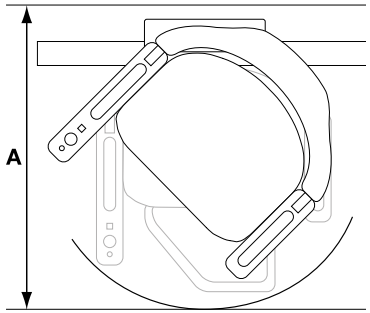

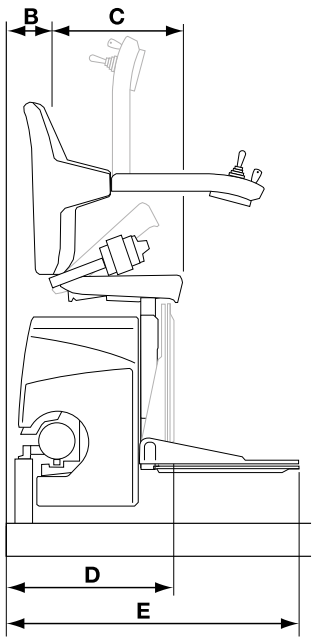

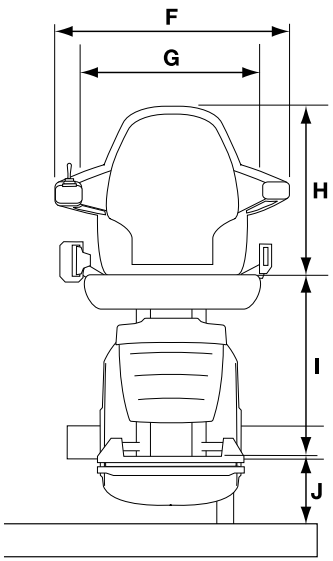

Classic		Dimensions	
		Van Gogh	Rembrandt
A	Swivel radius*	28.74-26.18 inch	29.53-26.97 inch
B	Wall to inner seat back	4.13 inch	4.92 inch
C	Seat depth	14.57 inch	14.57 inch
D	Minimum folded width to footplate	16.54 inch	17.32 inch
E	Minimum open width to edge footplate	25.20 inch	25.98 inch
	Offset footplate	24.02 inch	24.80 inch
F	Armrest width – external	22.05 inch	22.05 inch
G	Armrest width – internal	17.32 inch	17.32 inch
H	Seat back height	15.75 inch	15.75 inch
I	Footplate to seat height	18.70 inch	18.70 inch
J	Minimum footplate height	3.94 inch	3.94 inch
Minimum track intrusion into staircase		6.69 inch	7.48 inch
Maximum weight limit		19.7 Stone	19.7 Stone

*Dimensions may vary depending on hand of seat.

Depending on the stair configuration, measure **J** is 4.92 inch, to keep the rail as low as possible on the stairs.

DIMENSIONS_*elegance*

TOP VIEW - SIDEVIEW - FRONT VIEW

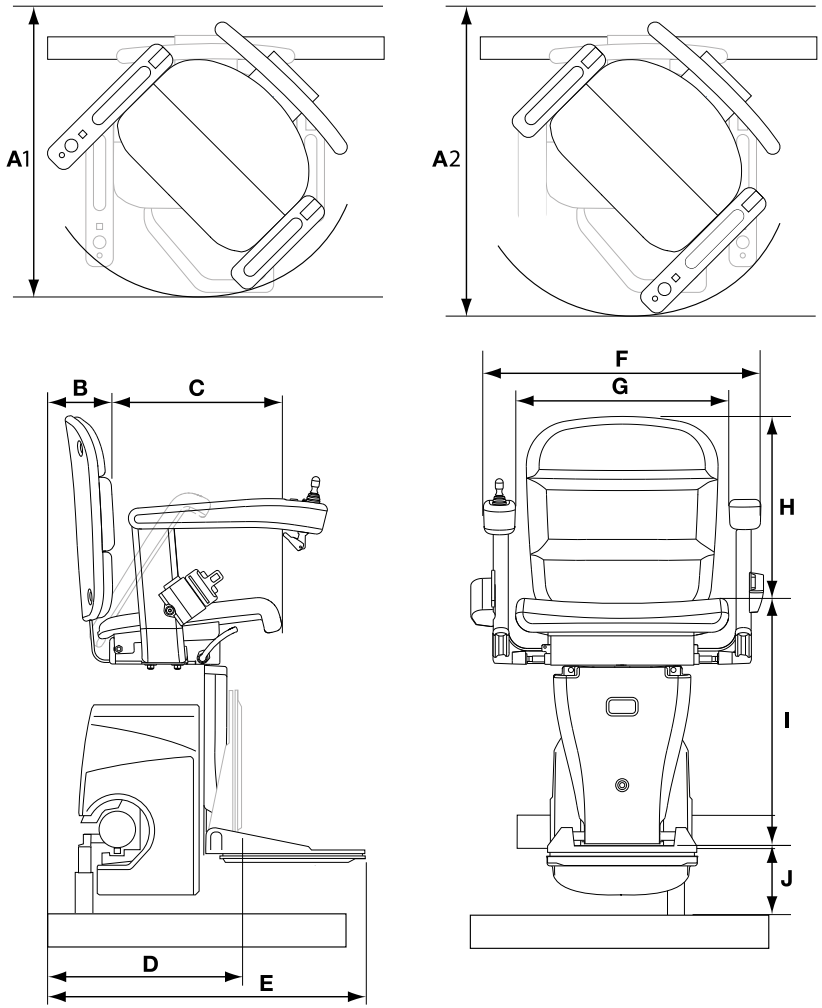

Elegance	Dimensions	
	Van Gogh	Rembrandt
A1 Swivel radius (short armrest)	25.91 inch	26.69 inch
A2 Swivel radius (long armrest)	27.56 inch	28.35 inch
B Wall to inner seat back	4.33 inch	5.12 inch
C Seat depth	14.96 inch	14.96 inch
D Minimum folded width to footplate	16.54 inch	17.32 inch
E Minimum open width to edge footplate	25.20 inch	25.98 inch
Offset footplate	24.02 inch	24.80 inch
F Armrest width – external	22.24-23.43 inch	22.24-23.43 inch
G Armrest width – internal	17.13-18.31inch	17.13-18.31inch
H Seat back height	15.55-16.34 inch	15.55-16.34 inch
I Footplate to seat height	19.29 inch	19.29 inch
J Minimum footplate height	3.94 inch	3.94 inch
Minimum track intrusion into staircase	6.69 inch	7.48 inch
Maximum weight limit	19.7 Stone	19.7 Stone

Depending on the stair configuration, measure **J** is 4.92 inch, to keep the rail as low as possible on the stairs.

DIMENSIONS_*alliance*

TOP VIEW - SIDEVIEW - FRONT VIEW

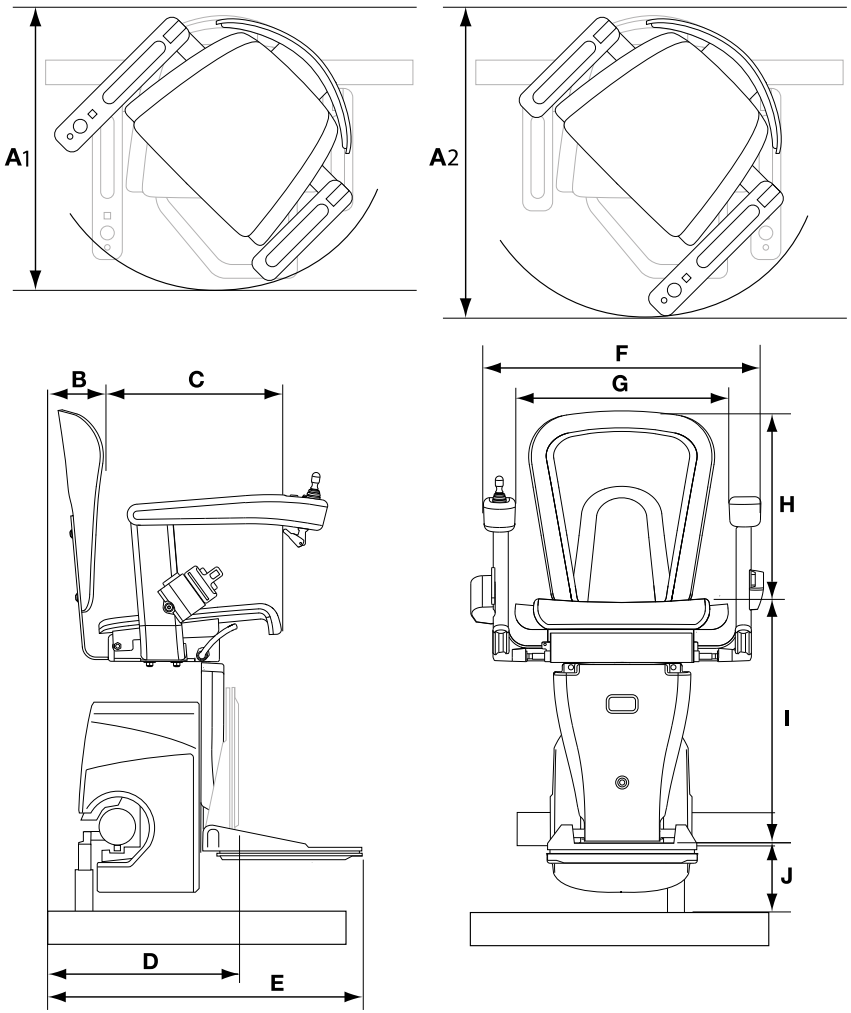

Alliance	Dimensions	
	Van Gogh	Rembrandt
A1 Swivel radius (short armrest)	25.91 inch	26.69 inch
A2 Swivel radius (long armrest)	27.56 inch	28.35 inch
B Wall to inner seat back	4.13 inch	4.92 inch
C Seat depth	14.96 inch	14.96 inch
D Minimum folded width to footplate	16.54 inch	17.32 inch
E Minimum open width to edge footplate	25.20 inch	25.98 inch
Offset footplate	24.02 inch	24.80 inch
F Armrest width – external	22.24-23.43 inch	22.24-23.43 inch
G Armrest width – internal	17.13-18.31inch	17.13-18.31inch
H Seat back height	15.55-16.34 inch	15.55-16.34 inch
I Footplate to seat height	19.29 inch	19.29 inch
J Minimum footplate height	3.94 inch	3.94 inch
Minimum track intrusion into staircase	6.69 inch	7.48 inch
Maximum weight limit	19.7 Stone	19.7 Stone

Depending on the stair configuration, measure **J** is 4.92 inch, to keep the rail as low as possible on the stairs.

DIMENSIONS_*active seat*

TOP VIEW - SIDEVIEW - FRONT VIEW

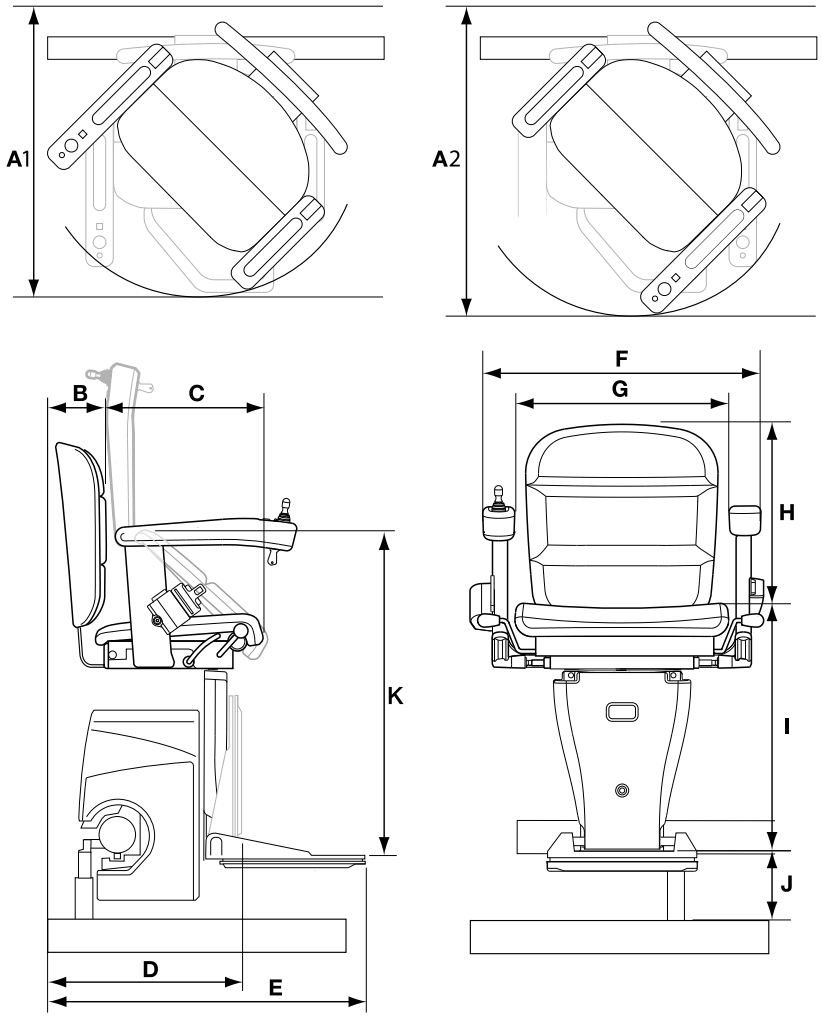

Elegance	Dimensions	
	Van Gogh	Rembrandt
A1 Swivel radius (short armrest)	25.91 inch	26.69 inch
A2 Swivel radius (long armrest)	27.56 inch	28.35 inch
B Wall to inner seat back	4.33 inch	5.12 inch
C Seat depth	15.16 inch	15.16 inch
D Minimum folded width to footplate	16.54 inch	17.32 inch
E Minimum open width to edge footplate	25.20 inch	25.98 inch
Offset footplate	24.02 inch	24.80 inch
F Armrest width – external	22.24-23.43 inch	22.24-23.43 inch
G Armrest width – internal	17.13-18.31inch	17.13-18.31inch
H Seat back height	15.55-16.34 inch	15.55-16.34 inch
I Footplate to seat height	19.49 inch	19.49 inch
J Minimum footplate height	3.94 inch	3.94 inch
Height between footplate and raised seat	27.76 inch	27.76 inch
Minimum track intrusion into staircase	6.69 inch	7.48 inch
Maximum weight limit	19.7 Stone	19.7 Stone

Depending on the stair configuration, measure **J** is 4.92 inch, to keep the rail as low as possible on the stairs.



Stair types

STRAIGHT

3D- VIEW

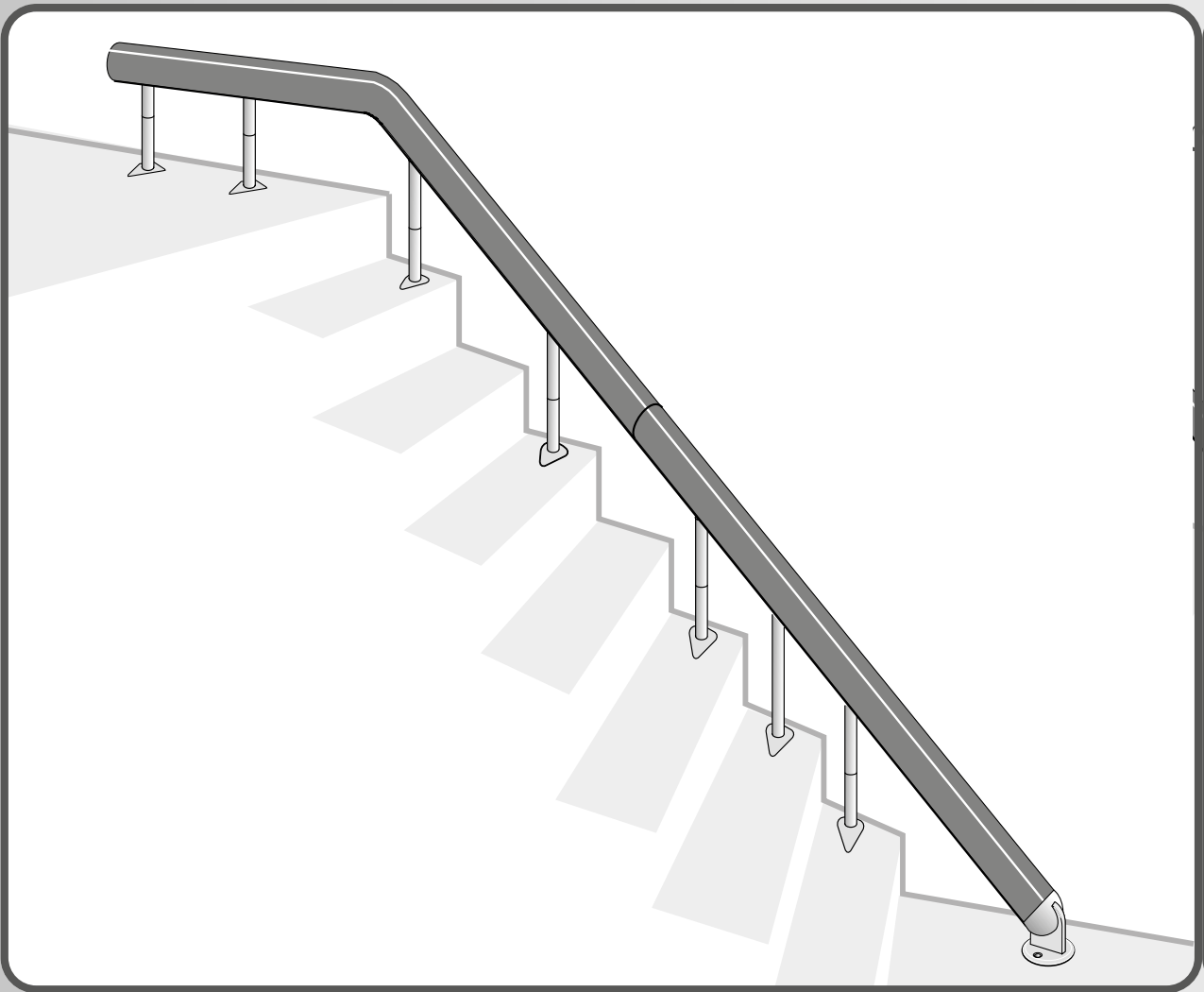

3D- VIEW

Extra requirements for underfloor heating:

- Do not use a drill.
- floor heating on downstairs floor
  - Support on 1st step
  - Attach rail foot with adhesive.
- floor heating on upstairs floor
  - Support on last step
  - Attach supports on upstairs floor with adhesive.

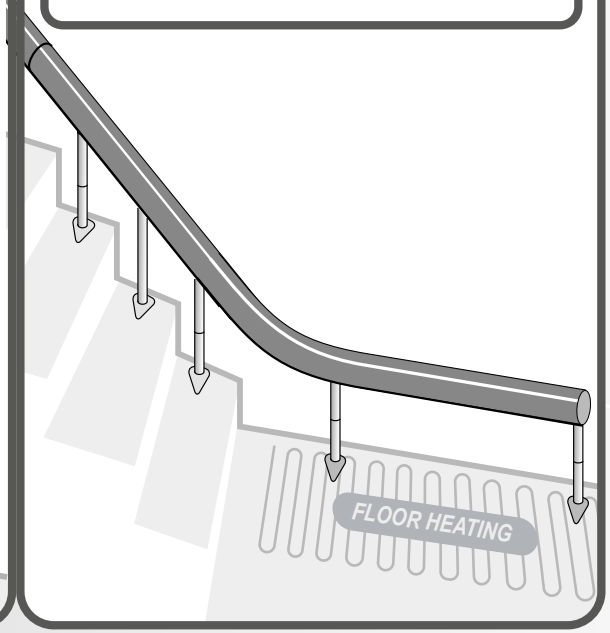

Different stair shapes are possible for the straight Van Gogh lifts; see the appendix for the possibilities and their conditions.
Underfloor heating can entail additional conditions.

NOT STRAIGHT

TOP VIEW

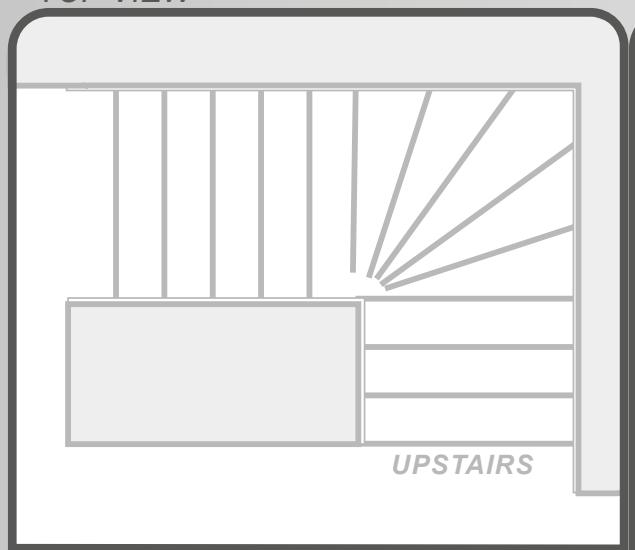

C

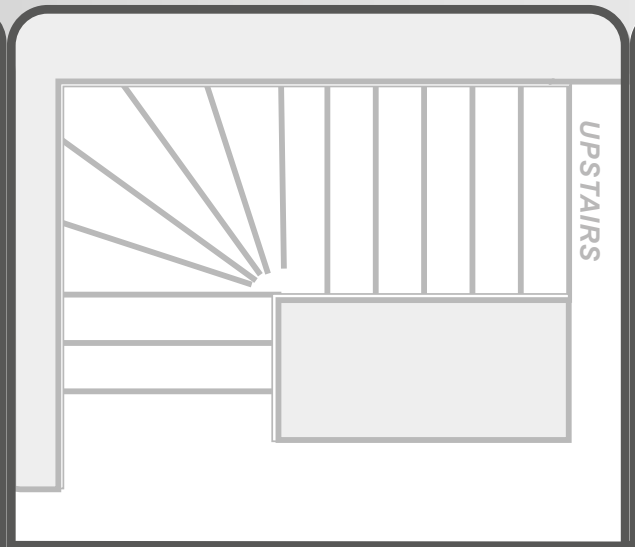

D

TOP VIEW

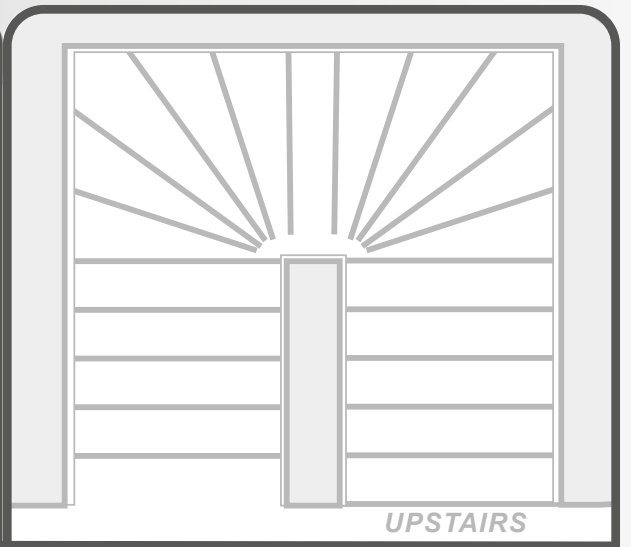

E

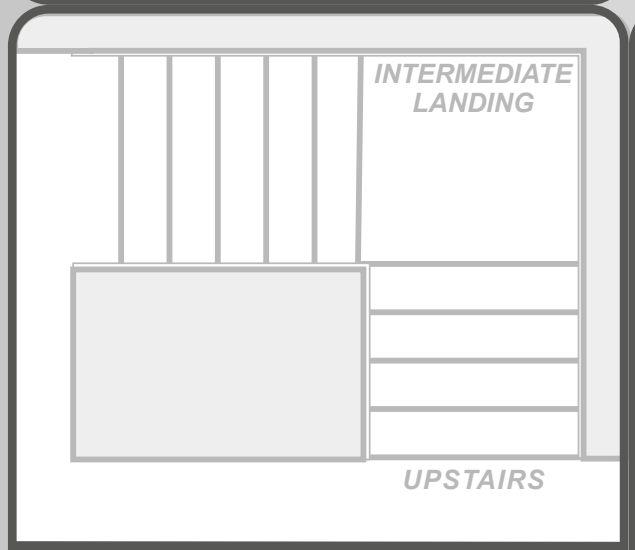

F

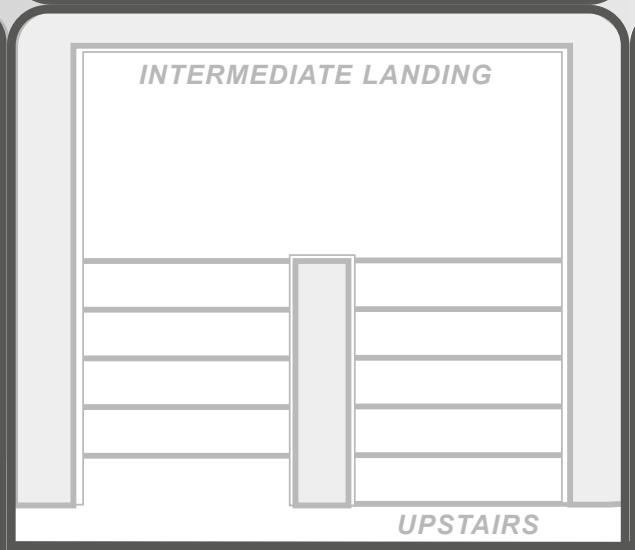

G

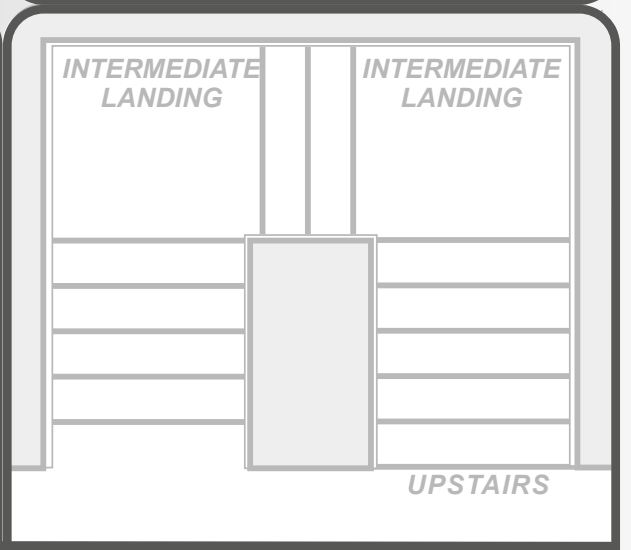

H

Feasible stair shapes for the Van Gogh and Rembrandt lifts.

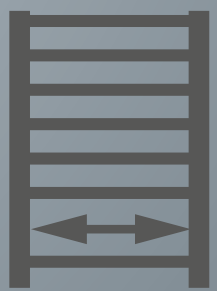

Stair width

STAIR WIDTH V.GOGH_*user*

SIDE VIEW

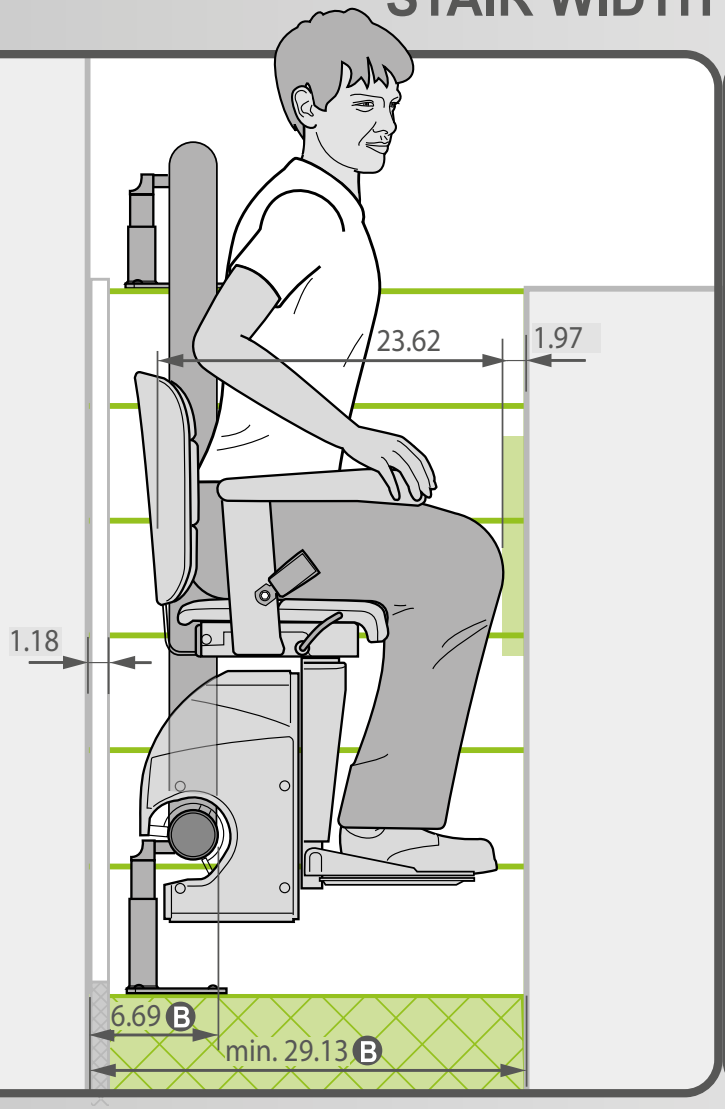

TOP VIEW

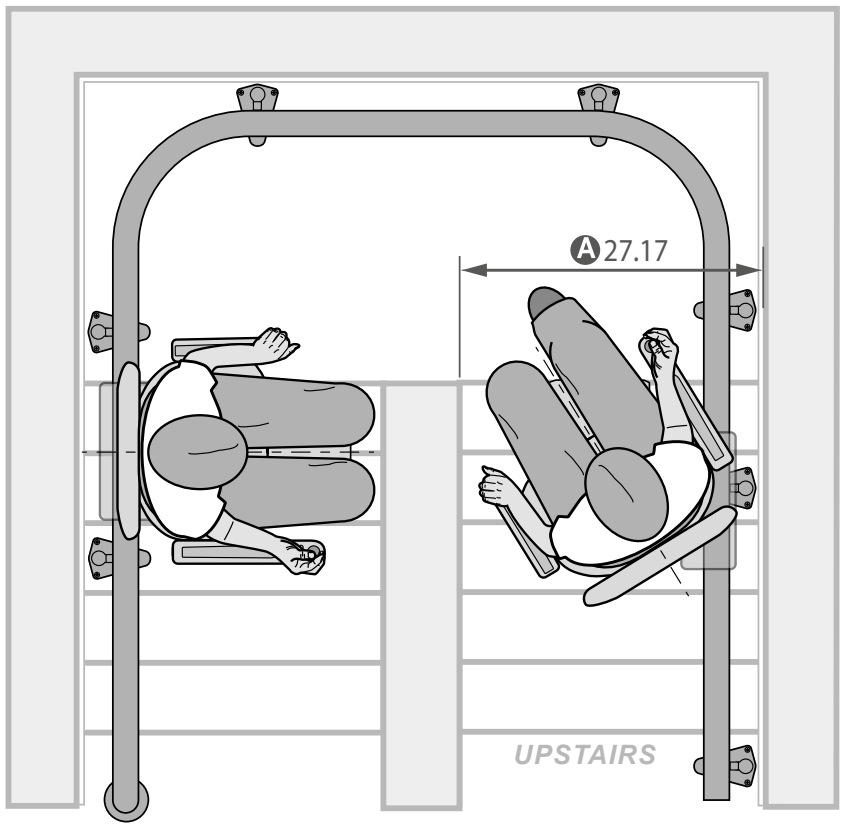

Ⓐ Stair width can be reduced when riding with an angled chair (45°/85°).

Ⓑ E/G -rail:+0.39 inch (only in France).

STAIR WIDTH V.GOGH_*stringer*

SIDE VIEW

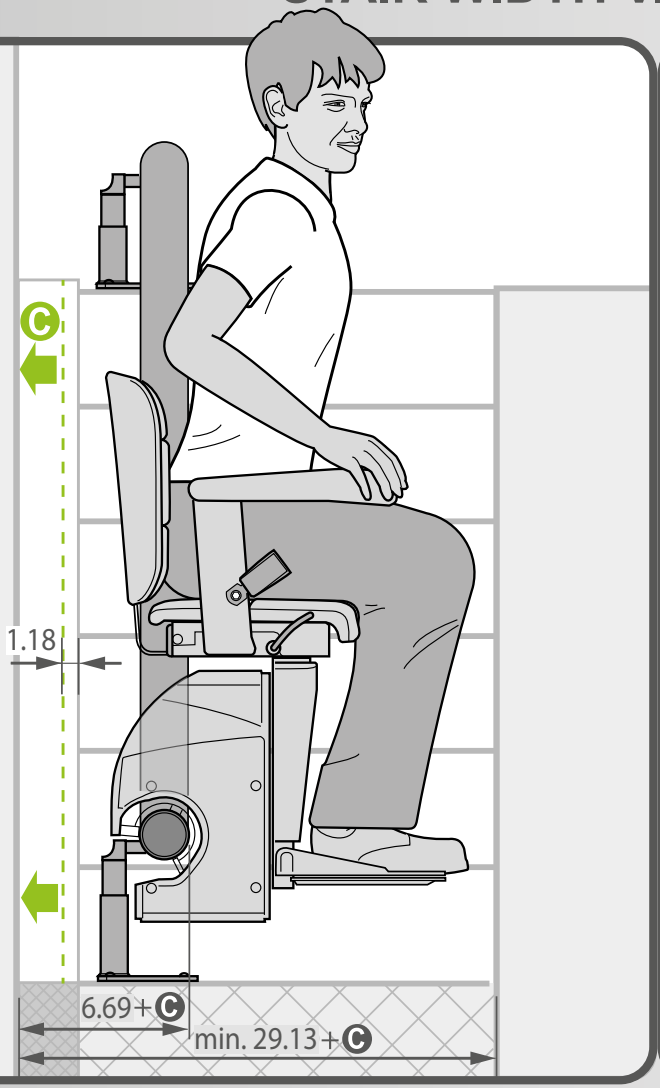

TOP VIEW

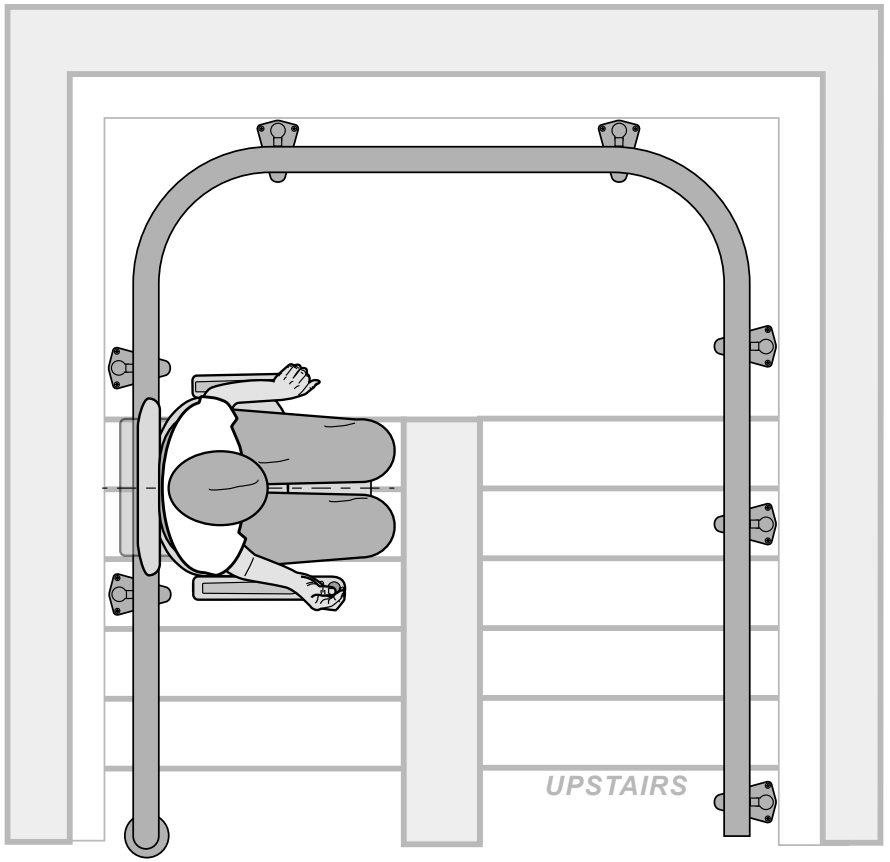

C Increase this size when stringer is more than 1.18 inch

STAIR WIDTH V.GOGH_*obstacle*

SIDE VIEW



TOP VIEW

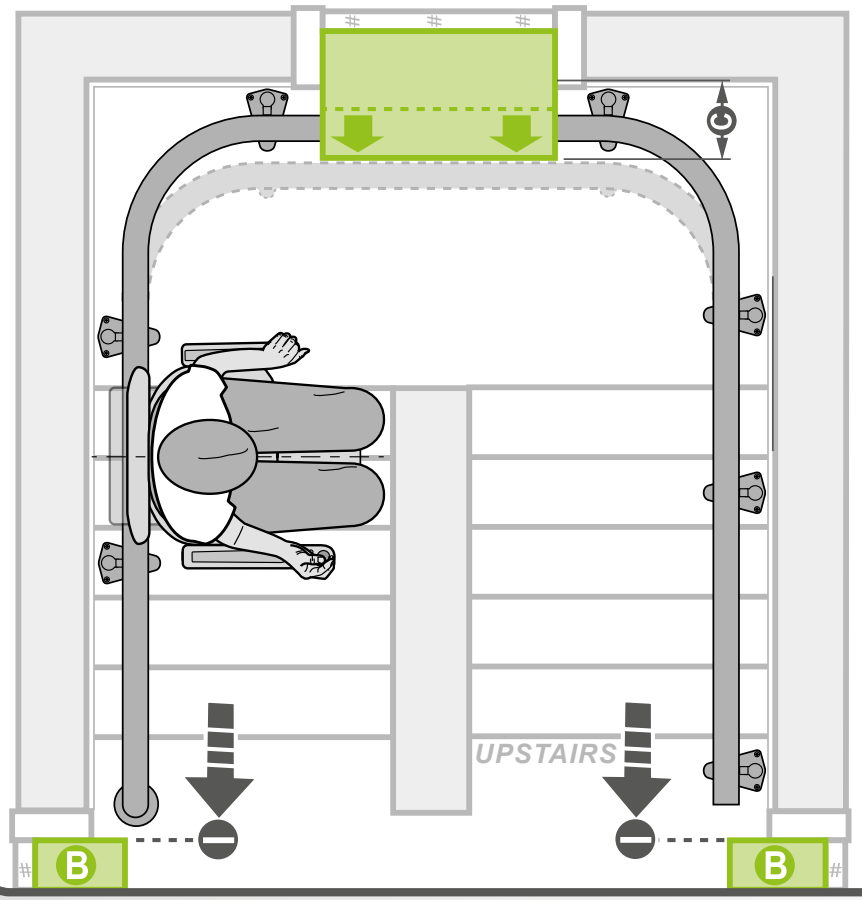

Ⓐ When more than 72.83 inch above the stairs no rail adjustment is needed. Obstacles below 72.83 inch shall always be measured.
Ⓑ The stairlift needs to stop before reaching an obstacle; adjust rail endings if necessary.
Ⓒ Increase the distance from the rail to the wall with the dimensions of the obstacle.
If handrail is partly removed, the remaining parts should be considered as an obstacle.
If an obstacle is not indicated by a marker in PhotoSurvey, it will be considered to be removed.



REMBRANDT

MINIMUM REQUIRED STAIR WIDTH

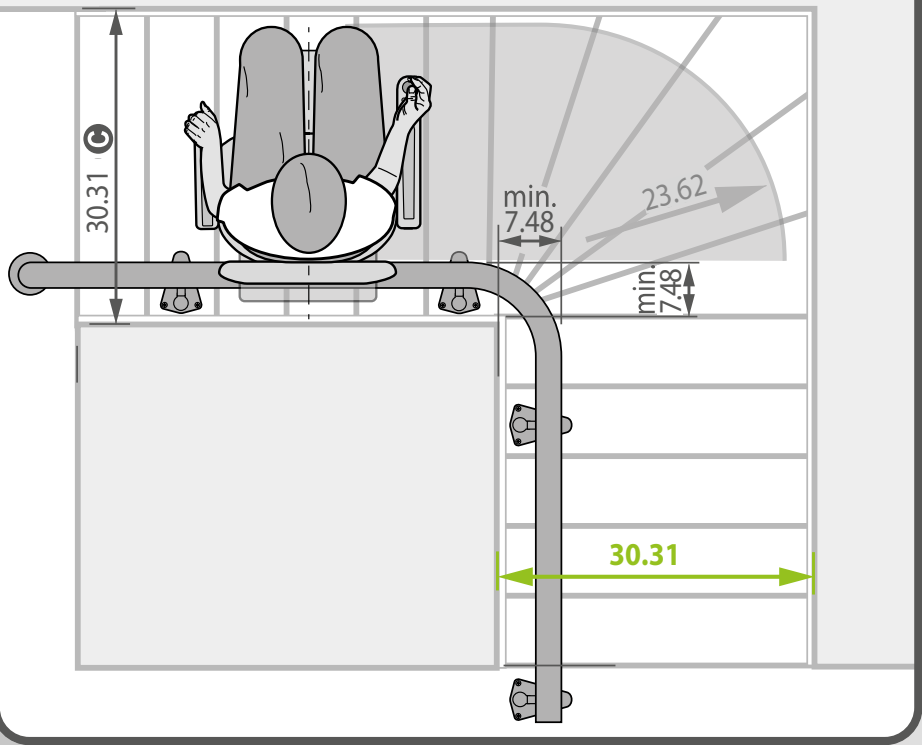

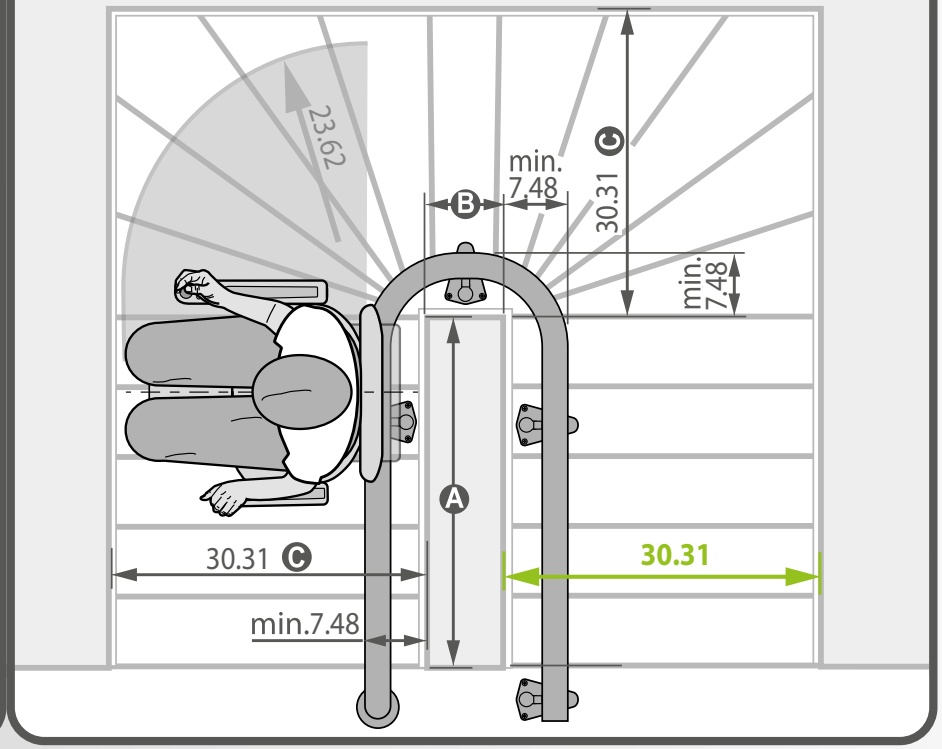

- The minimum required stair width for a Rembrandt is 30.31 inch when the rail is at 7.48 inch from the wall.
- With the Rembrandt, riding the lift with the seat in the swivelled position does not create extra space for the knees.
- The dimension of 30.31 inch is based on a user with an upper leg length of 23.62 inch.
- To comply with EN 81-40: 2020, an unobstructed space of 15.75 inch (19.69 inch in the Netherlands pursuant to the Building Code) is required between the seat and the opposite wall or hand rail at the parked position to allow evacuation in the event of a fire.

A - RAIL

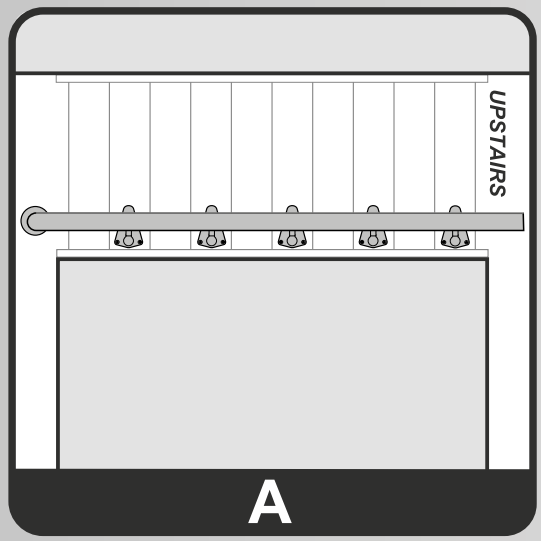

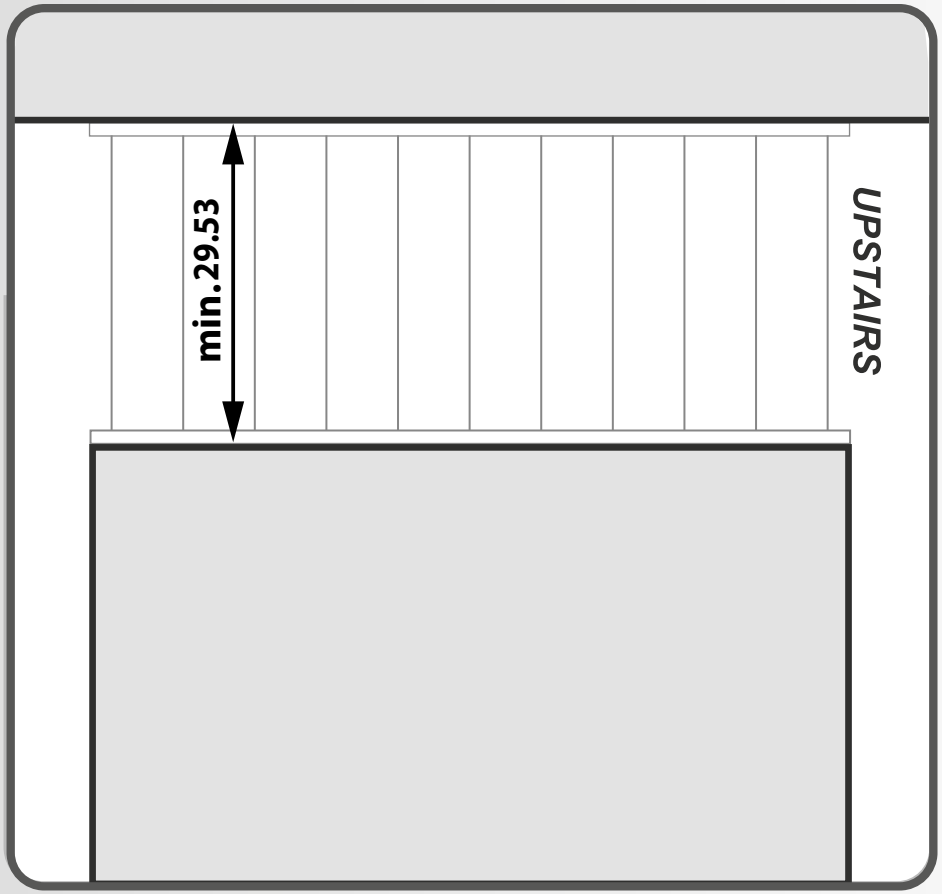

- A Freecurve lift can always be installed if the width of the stairs is at least 29.53 inch. The distance from the front face of the rail to the wall is 6.69 inch instead of 7.48 inch. This leaves about 1.97 inch of space between the user's knees and the opposite wall or hand rail.

- If the stair lift is ridden with the seat swivelled, the minimum required stair width is 27.17 inch. A rail overrun is required at the top of the stairs to allow the seat to be rotated back.

- Refer to the relevant sections in the sales manual for the conditions for attaching the rail to the stairs.

C - RAIL

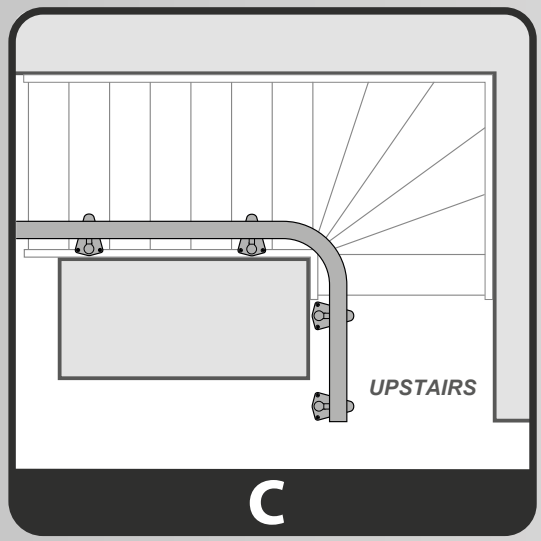

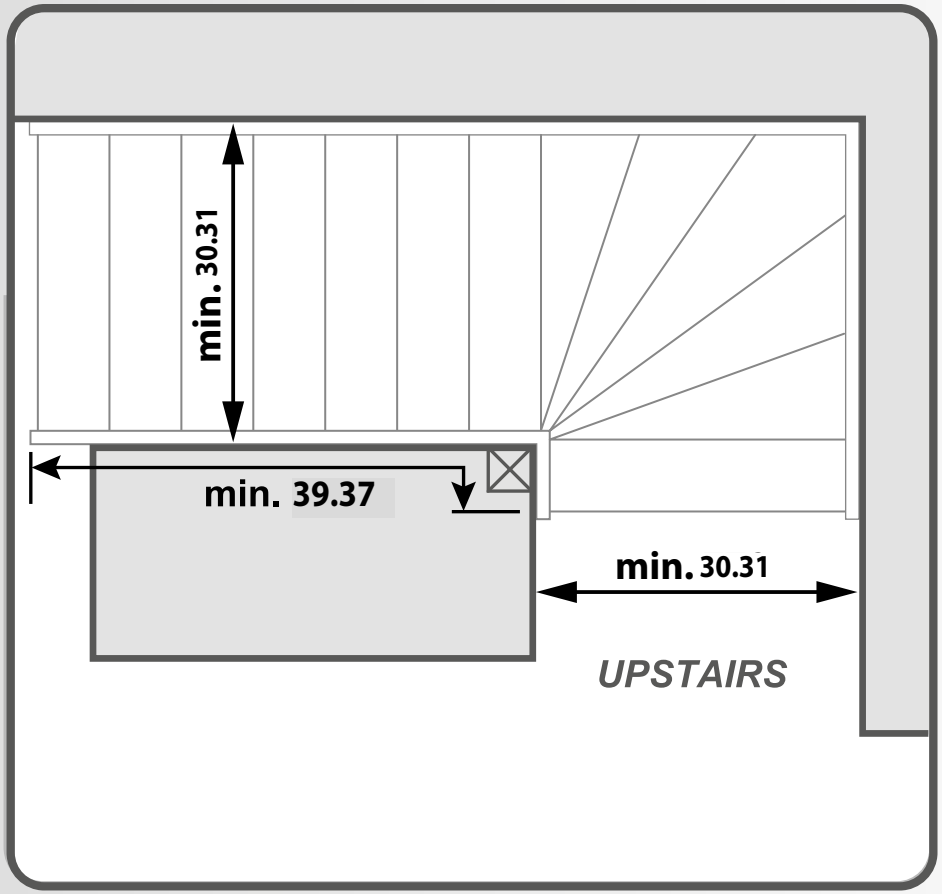

- The horizontal length of both walls together must be at least 39.37 inch..

C - RAIL (LAST WALL < 7.87 inch)

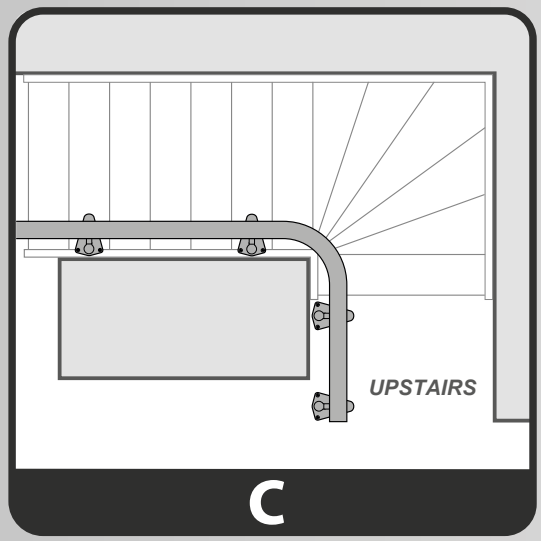

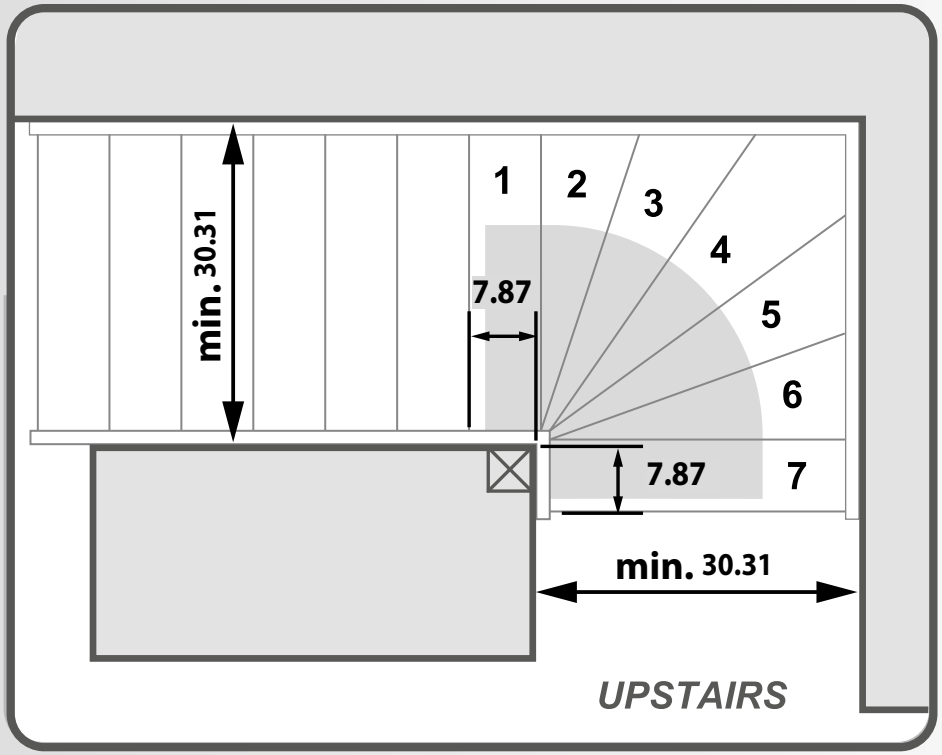

- Determine the number of steps in the winder section at the top of the stairs.

- The winder section starts 7.87 inch before the post and ends a maximum of 7.87 inch after the post, but never further than the nosing of the last step.

- Number of steps in the winder section:
  - 5 steps or less: rail at 7.48 inch (30.31 inch* stair width required)
  - 6 steps rail at 8.66 inch (31.50 inch* stair width required)
  - 7 steps rail at 9.06 inch (31.89 inch* stair width required)
  - More than 7 steps: not an option (the stairs are too steep)

** Based on an upper leg length of* 23.62 inch.

C - RAIL (LAST WALL > 7.87 inch)

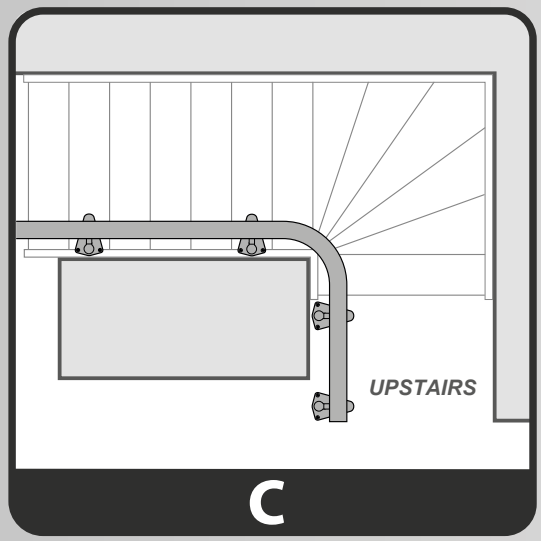

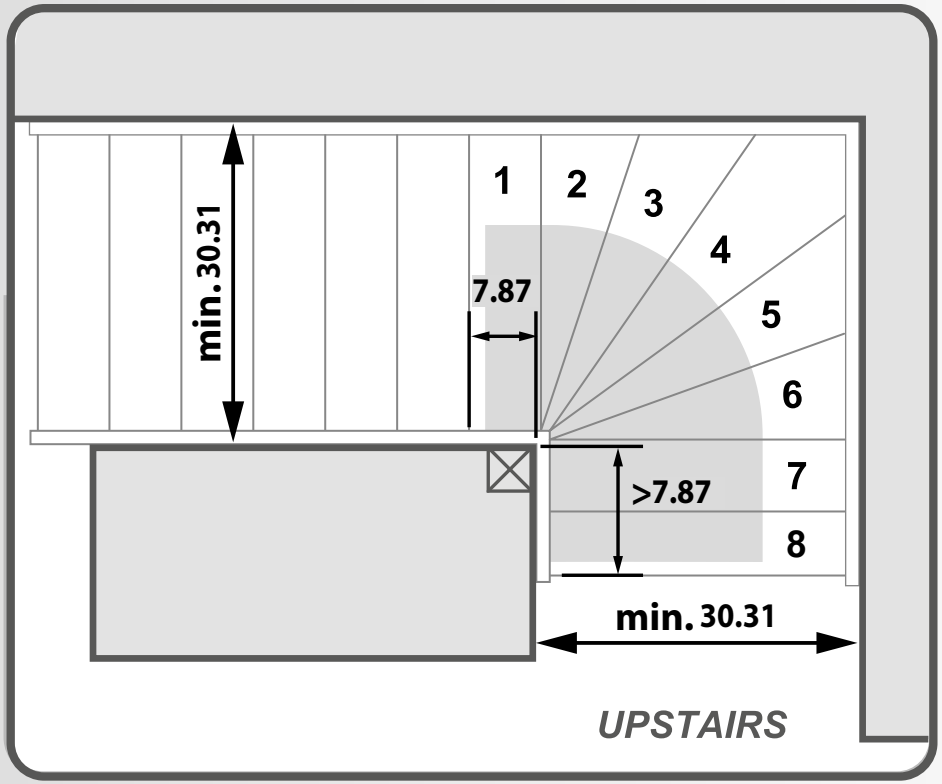

- Determine the number of steps in the winder section at the top of the stairs.
- The winder section starts 7.87 inch before the post and ends at the nosing of the last step.
- Number of steps in the winder section:
  - 5 steps or less: rail at 7.87 inch (30.71 inch* stair width required)
  - 6 steps rail at 7.87 inch (30.71 inch* stair width required)
  - 7 steps rail at 7.87 inch (30.71 inch* stair width required)
  - More than 7 steps: see basic conditions for the **D**-rail

** Based on an upper leg length of* 23.62 inch.

D - RAIL

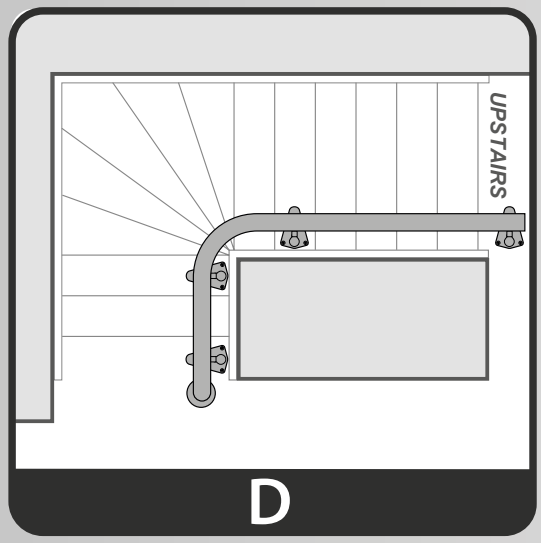

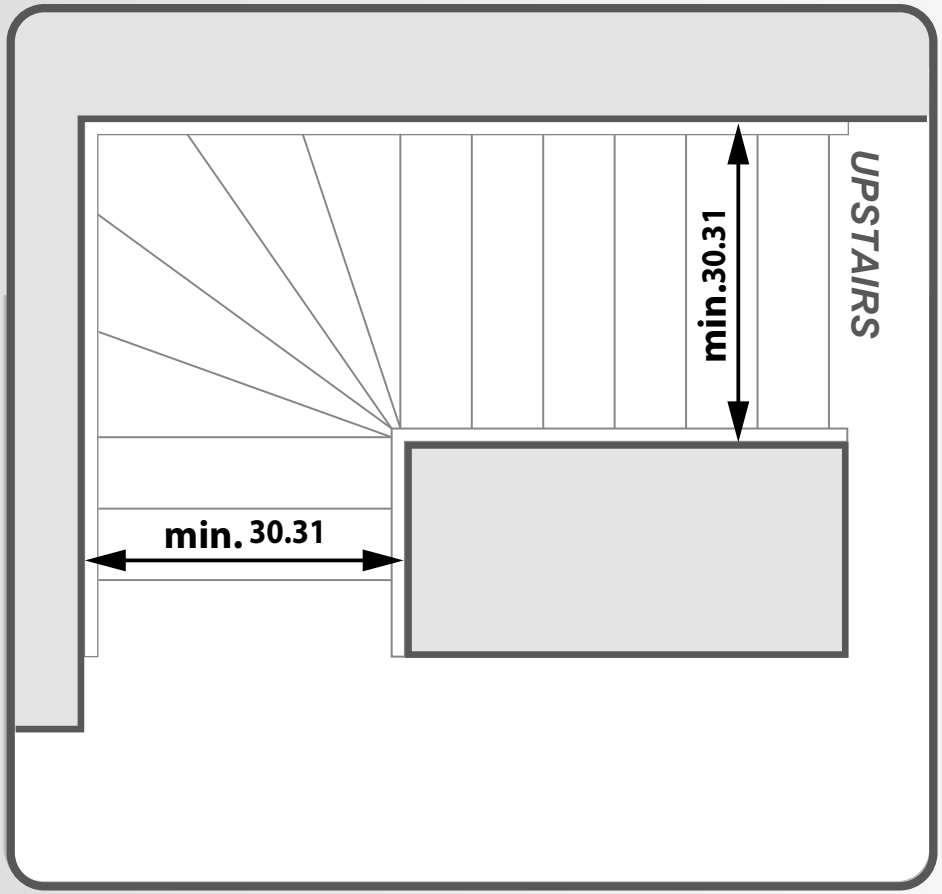

- A Rembrandt is always an option.
- If more space is needed at the bottom of the stairs, a parking curve is used.

handicare

E - RAIL

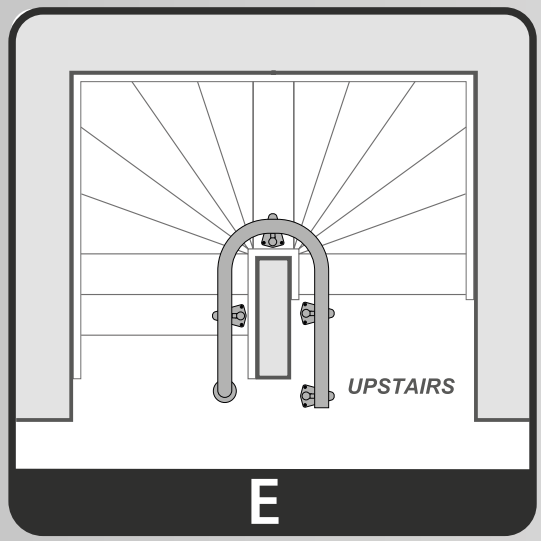

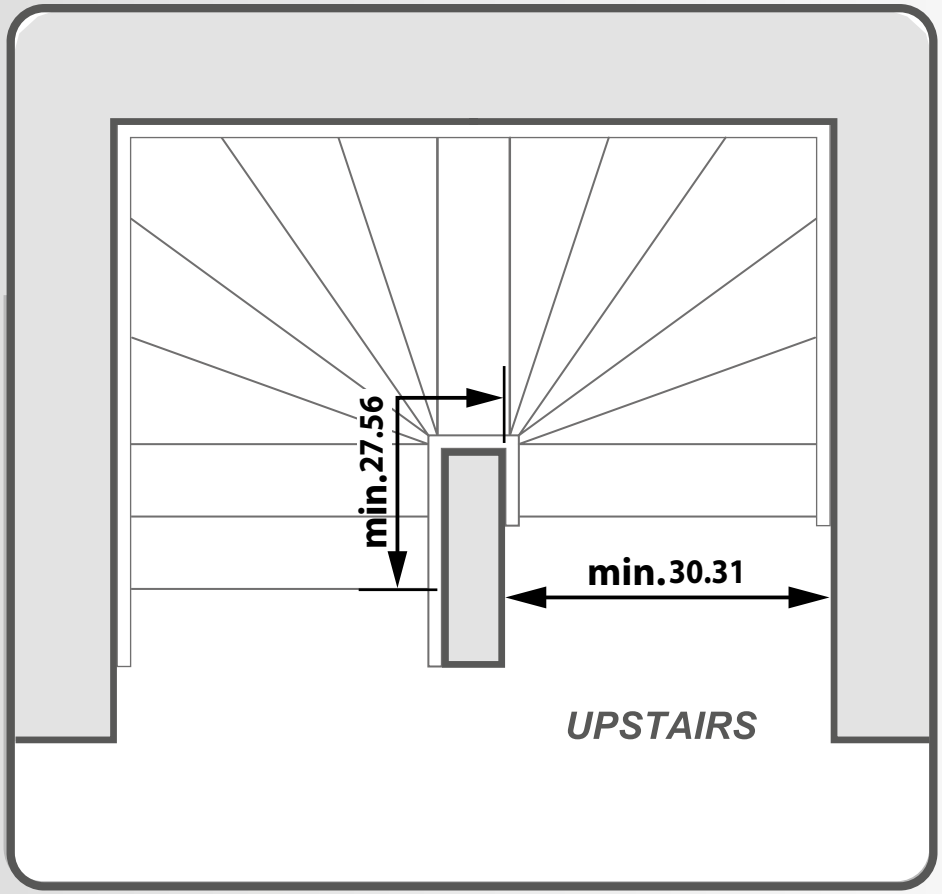

- The feasibility of using a Rembrandt is determined by the required horizontal length of the first two walls together:
  < 27.56 inch: Rembrandt not an option
  27.56 inch-31.50 inch: have a drawing made
  > 31.50 inch: Rembrandt an option

E - RAIL (LAST WALL < 7.87 inch)

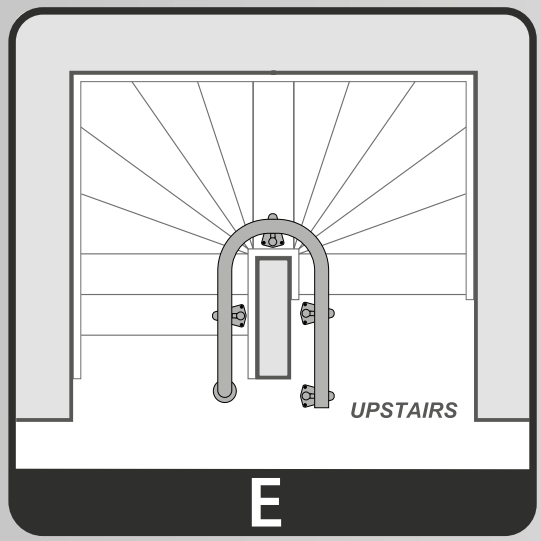

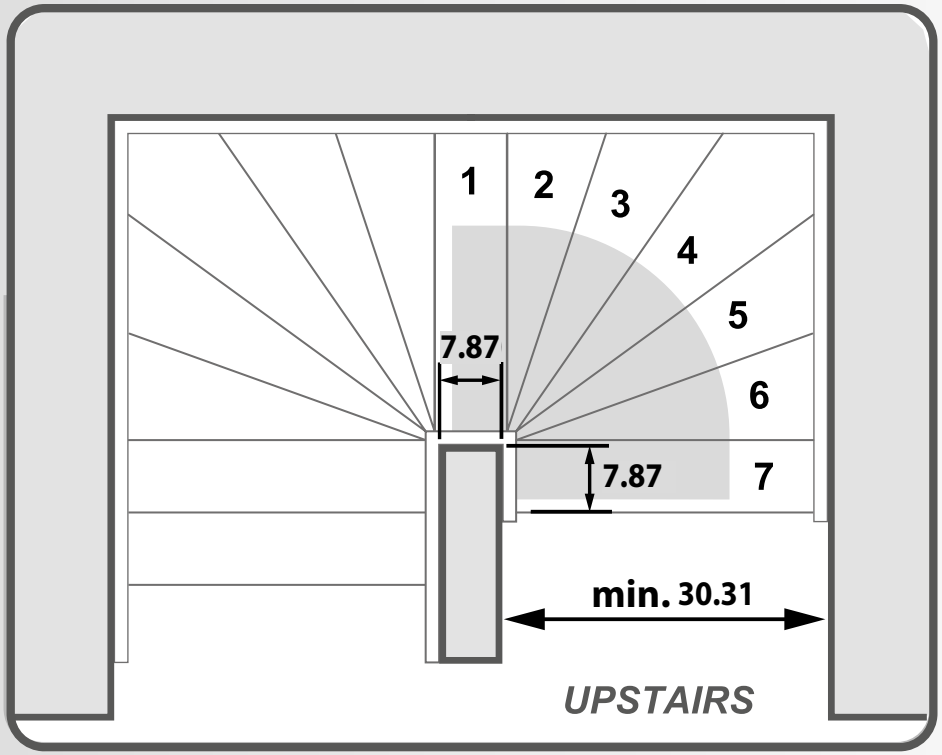

- Determine the number of steps in the winder section at the top of the stairs.
- The winder section starts no more than 7.87 inch before the post and ends a maximum of 7.87 inch after the post, but never further than the nosing of the last step.
- Number of steps in the winder section:
  - 5 steps or less: rail at 7.48 inch (30.31 inch* stair width required)
  - 6 steps rail at 8.66 inch (31.50 inch* stair width required)
  - 7 steps rail at 9.06 inch (31.89 inch* stair width required)
  - More than 7 steps: not an option (the stairs are too steep)

** Based on an upper leg length of 23.62 inch.*

REMBRANDT

STAIR WIDTH

A-RAIL

C-RAIL

C-RAIL_*wall< 7.87 inch*

C-RAIL_*wall> 7.87 inch*

D-RAIL

E-RAIL

E-RAIL_*wall< 7.87 inch*

E-RAIL_*wall> 7.87 inch*

F-RAIL

G-RAIL

UPSTAIRS_*horizontal*

UPSTAIRS_*90⁰ park*

UPSTAIRS_*180⁰ park*

handicare

E - RAIL (LAST WALL > 7.87 inch)

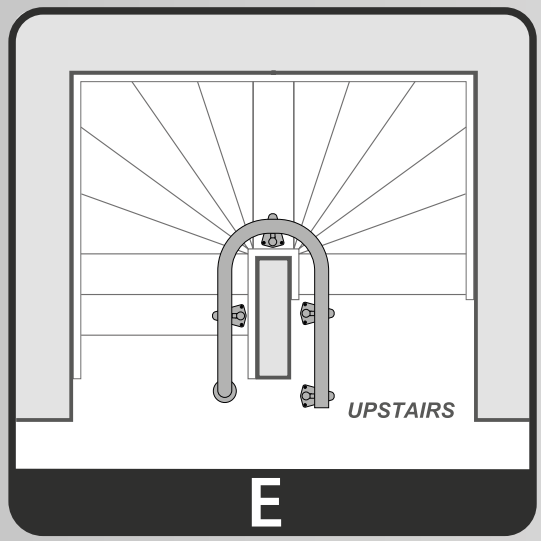

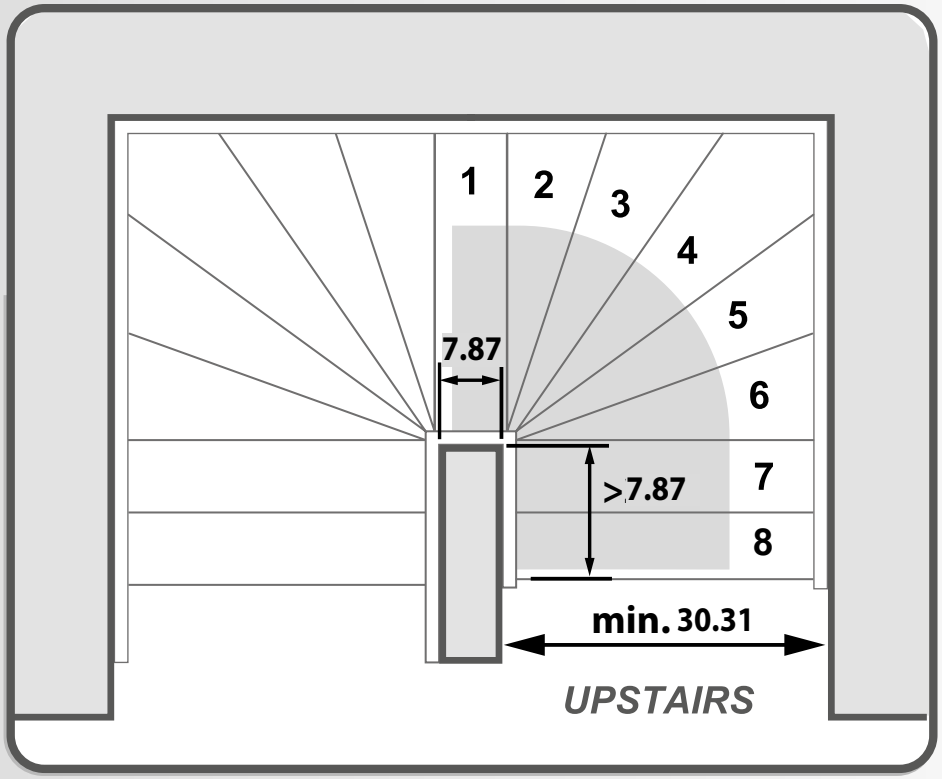

- Determine the number of steps in the winder section at the top of the stairs.
- The winder section starts 7.87 inch before the post and ends at the nosing of the last step.

- Number of steps in the winder section:
  - 5 steps or less: rail at 7.87 inch (30.71 inch* stair width required)
  - 6 steps rail at 7.87 inch (30.71 inch* stair width required)
  - 7 steps rail at 7.87 inch (30.71 inch* stair width required)

** Based on an upper leg length of 23.62 inch.*

F - RAIL

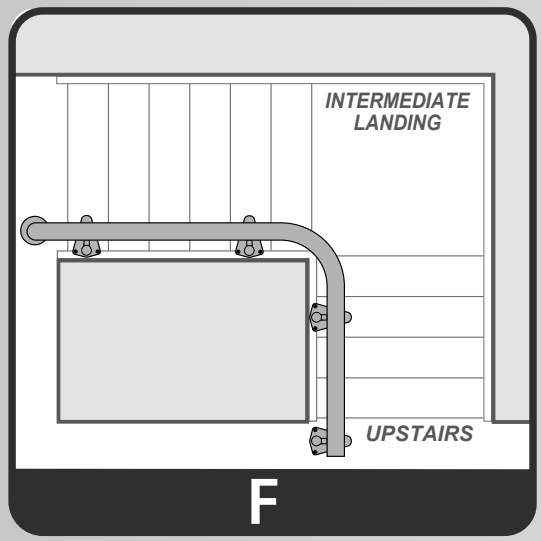

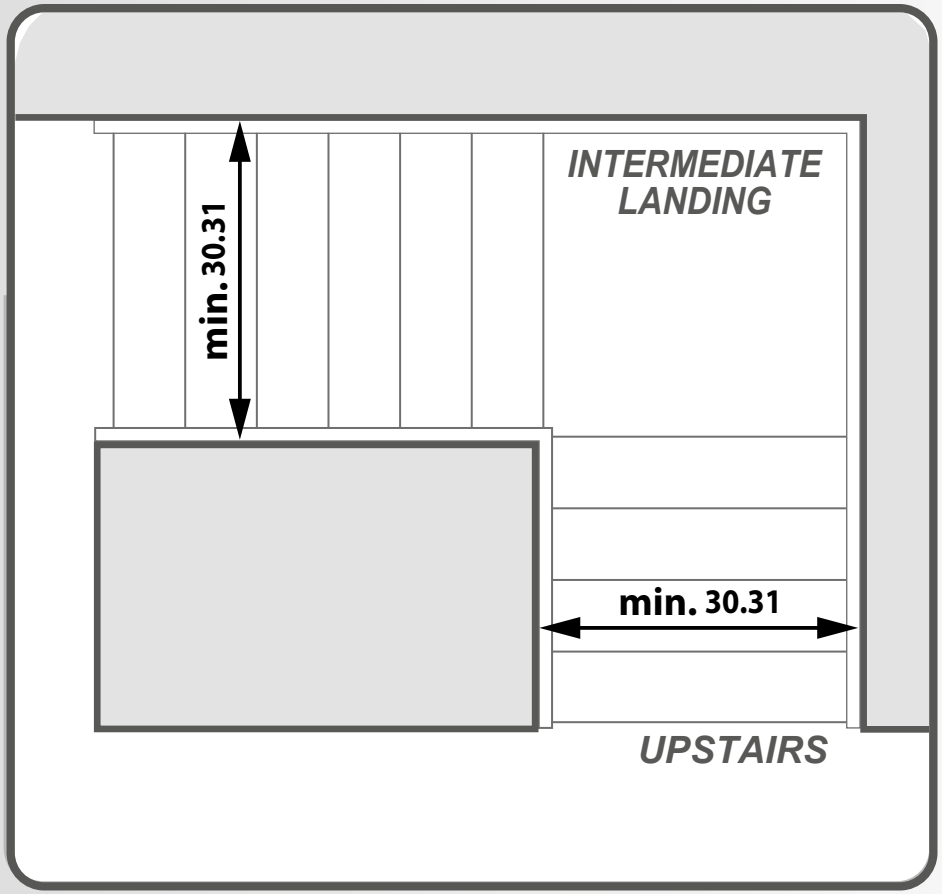

- A Rembrandt can always be installed provided the stairs are wider than 30.31 inch, based on an upper leg length of 23.62 inch.
- If there is only one step on the wall after the newel, the recommendation is to have a feasibility drawing made.

G - RAIL

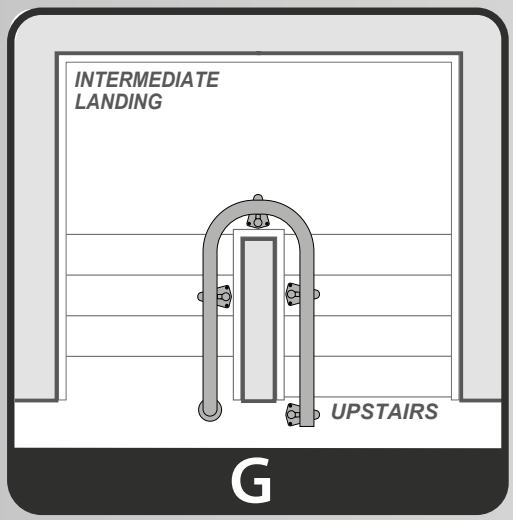

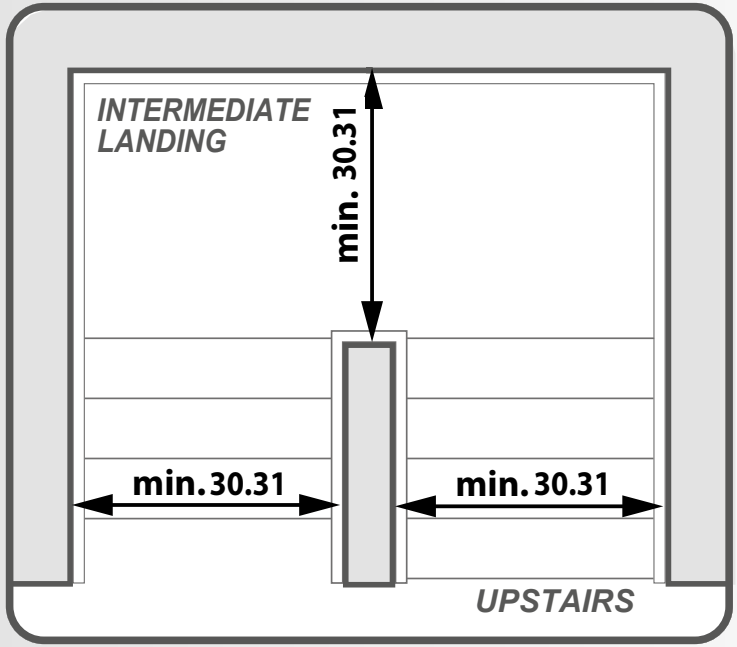

- A Rembrandt can be installed if the stairs are wider than 30.31 inch, based on an upper leg length of 23.62 inch.

- The distance from the rail to the wall depends on the width of the stairwell shaft.

- The distance from the front face of the rail to the wall can be 7.48 inch if the stairwell shaft is at least 7.87 inch wide. In this case, the rail slants slightly upward on the intermediate landing.

- If the stairwell shaft is narrower, the rail is positioned further from the wall.

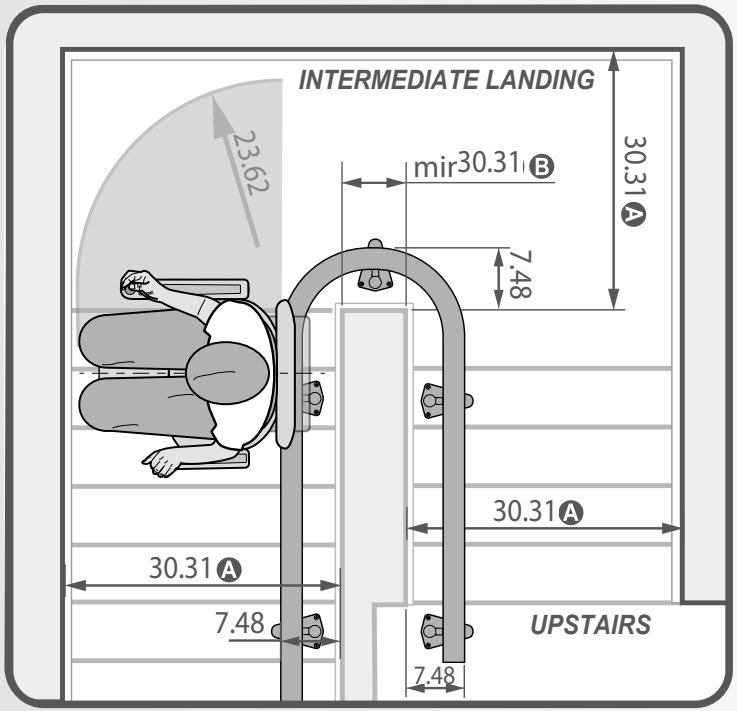

REMBRANDT

STAIR WIDTH

A-RAIL

C-RAIL

C-RAIL_wall< 7.87 inch

C-RAIL_wall> 7.87 inch

D-RAIL

E-RAIL

E-RAIL_wall< 7.87 inch

E-RAIL_wall> 7.87 inch

F-RAIL

G-RAIL

UPSTAIRS_horizontal

UPSTAIRS_90° park

UPSTAIRS_180° park

handicare

RAIL TERMINATES HORIZONTALLY AT THE TOP OF THE STAIRS

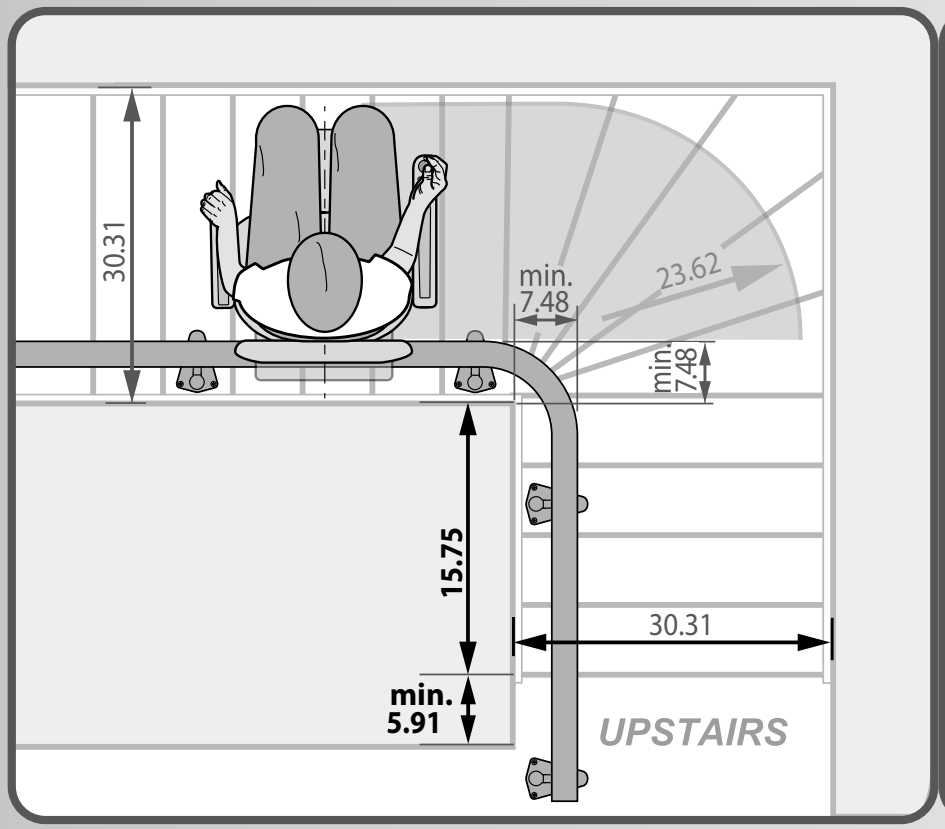

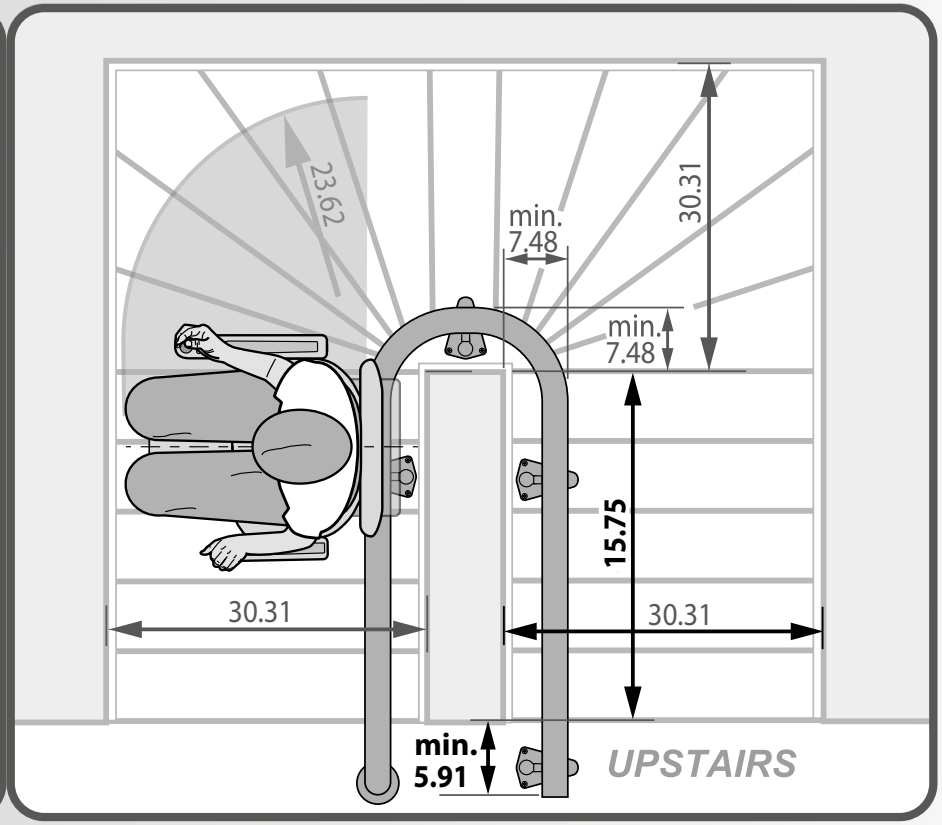

- Stair type **A**, **D** and **G**: always an option

- Stair type **C**, **E** and **F**:
  -The required length of the last wall is at least 15.75 inch, this is the length from the newel post to the nosing of the last step.
  -The rail overrun at the top of the stairs is 5.91 inch

90⁰ PARKING CURVE AT THE TOP OF THE STAIRS

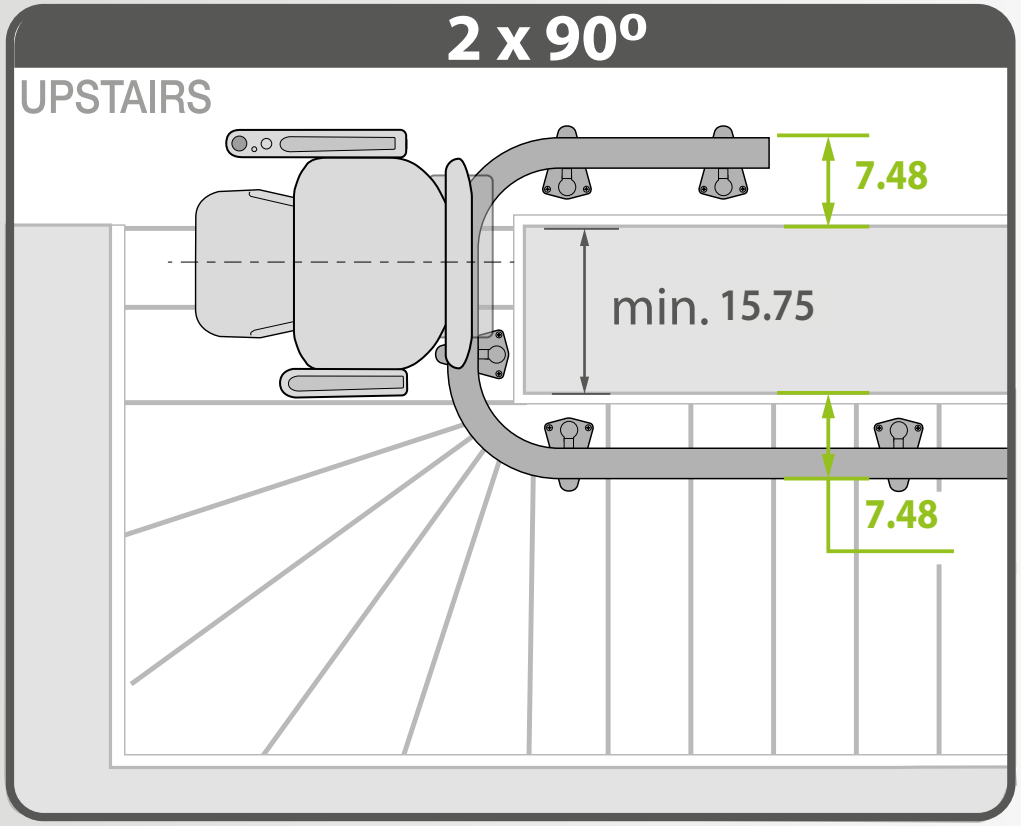

- Stair type **A**, **D** and **G**: always possible if the rail terminates horizontally.
- Stair type **C**, **E** and **F** if the rail terminates horizontally: The rail is at least 23.23 inch from the newel post at the start of the last wall.

180⁰ PARKING CURVE AT THE TOP OF THE STAIRS

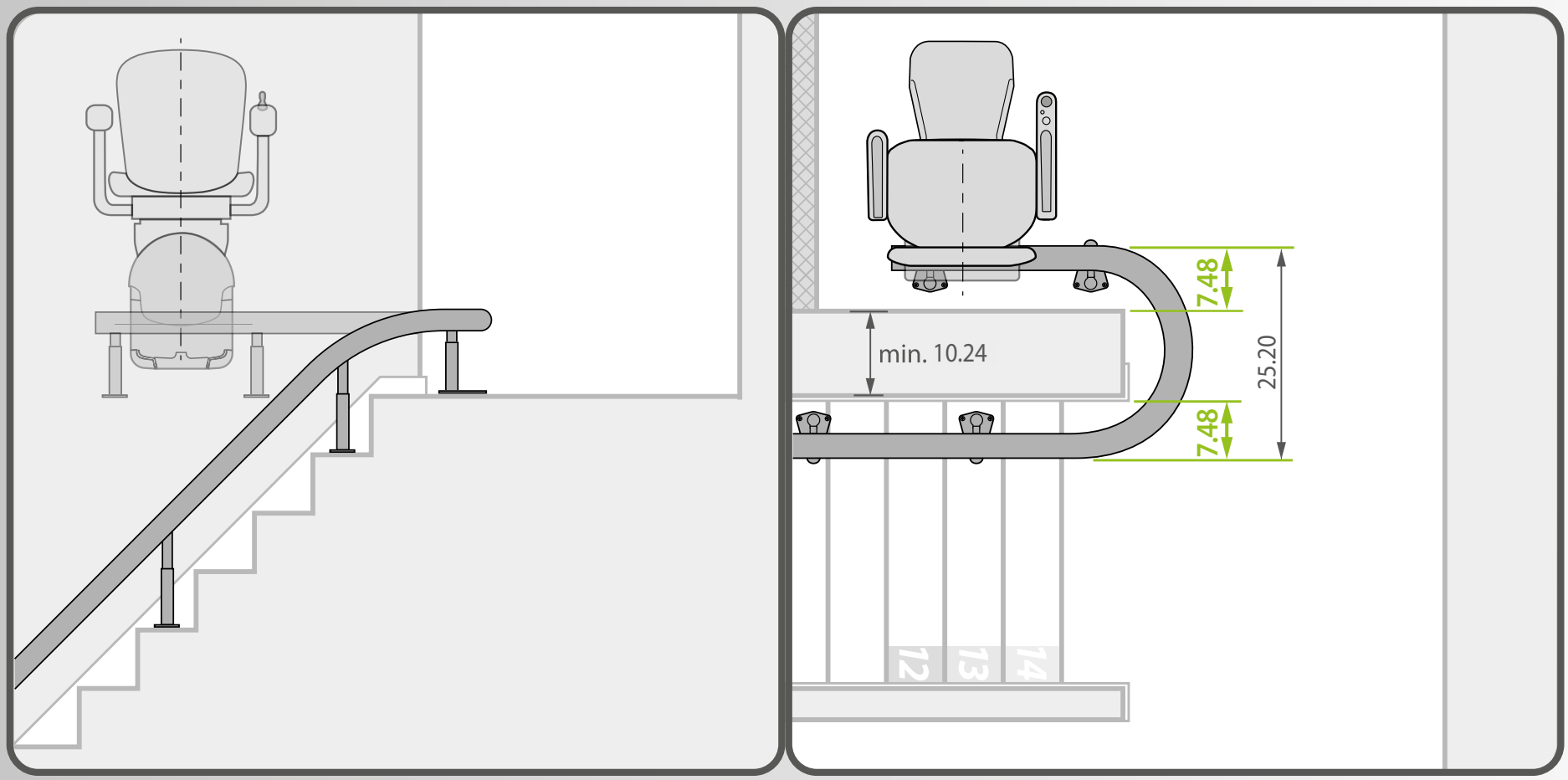

- A 180°° parking curve is possible at the top of the stairs if the rail terminates horizontally.
- The distance between the two outer faces of the rail is 25.20 inch.

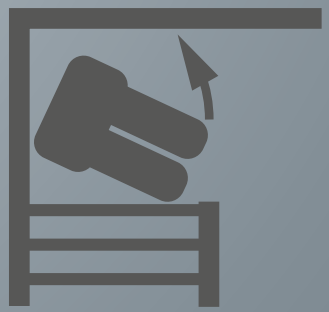

Turning space

TURNING CLEARANCE_*user*

TOP VIEW

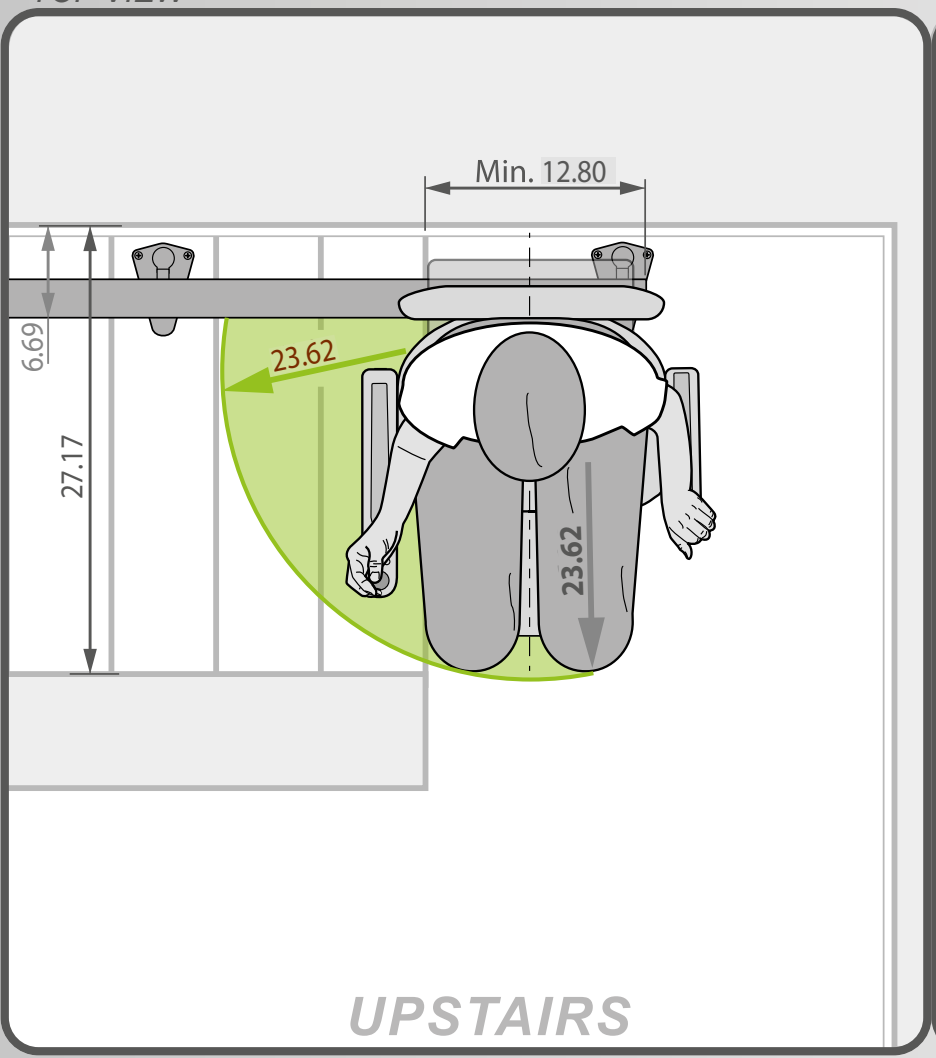

UPSTAIRS

TOP VIEW

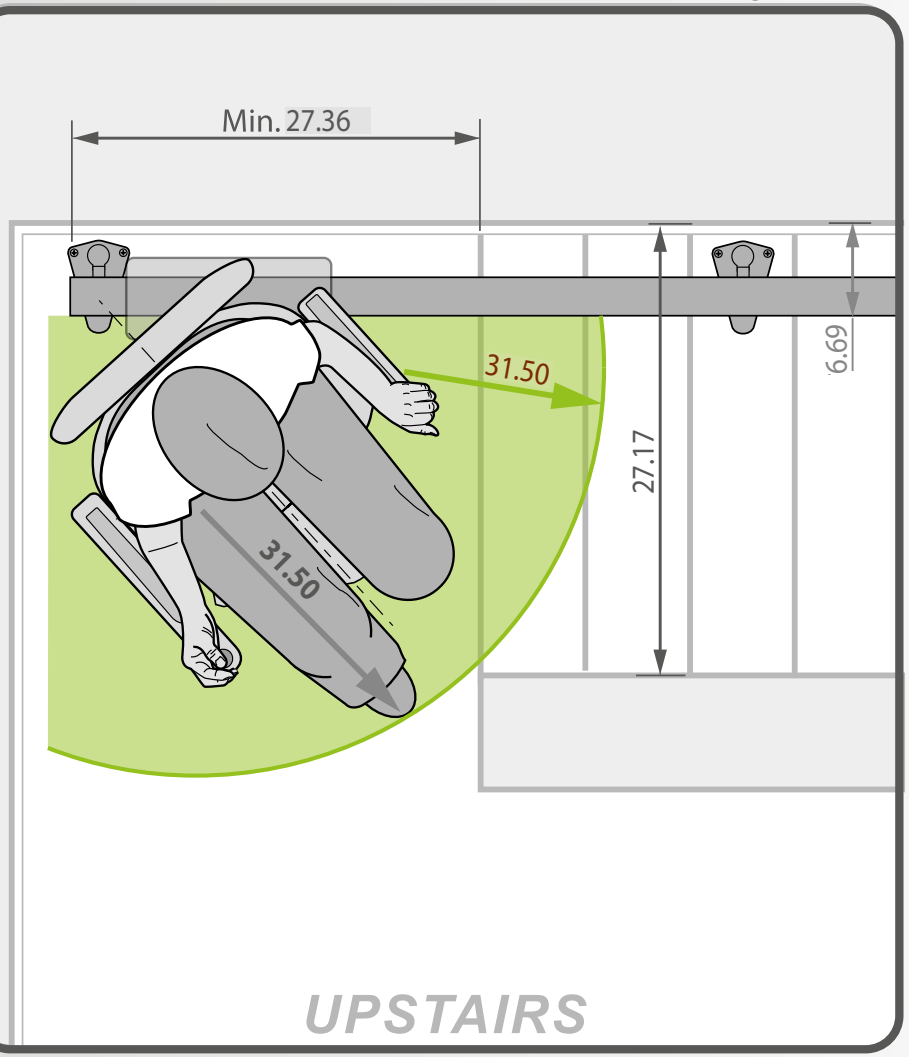

UPSTAIRS

handicare

TURNING CLEARANCE_*seat*

TOP VIEW

Elegance/Alliance

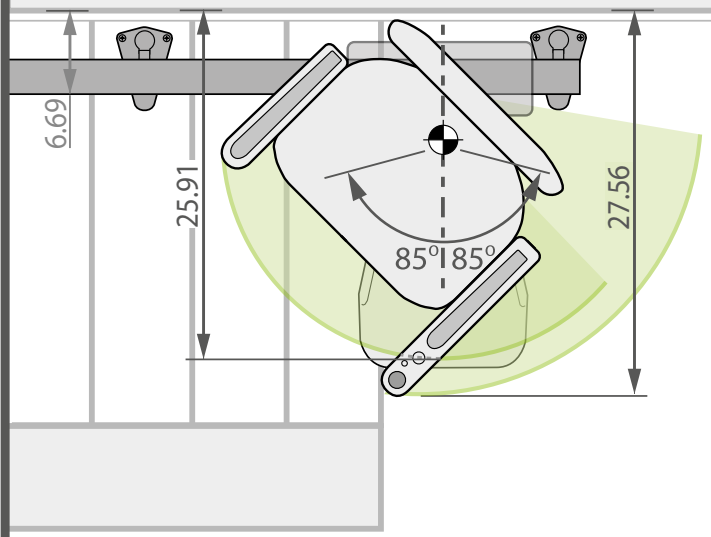

TOP VIEW

Classic

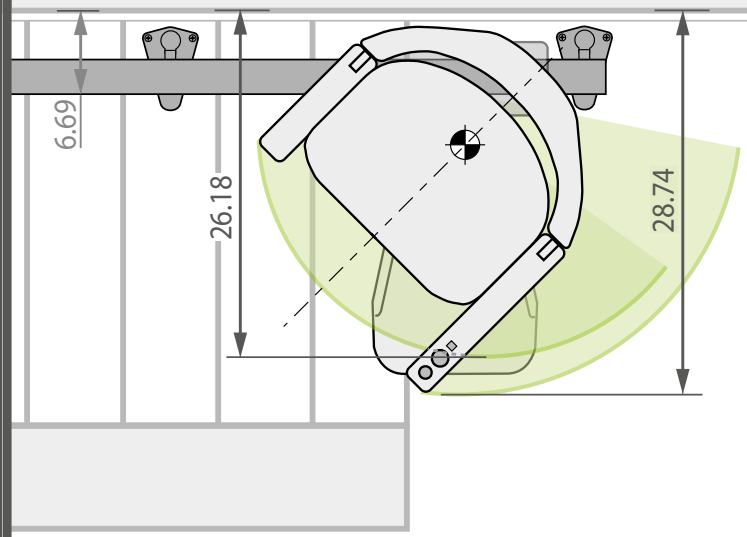

Elegance/Alliance/Classic seat manual centric swivel 45°/85° both directions.
Elegance/Alliance/Classic seat powered centric swivel 70° to the top landing.

handicare

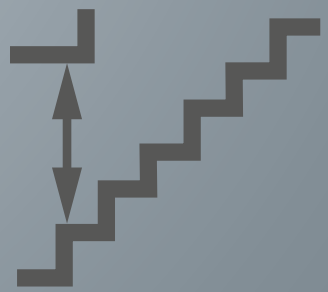

Bulkhead

OVERHEAD CLEARANCE

SIDE VIEW

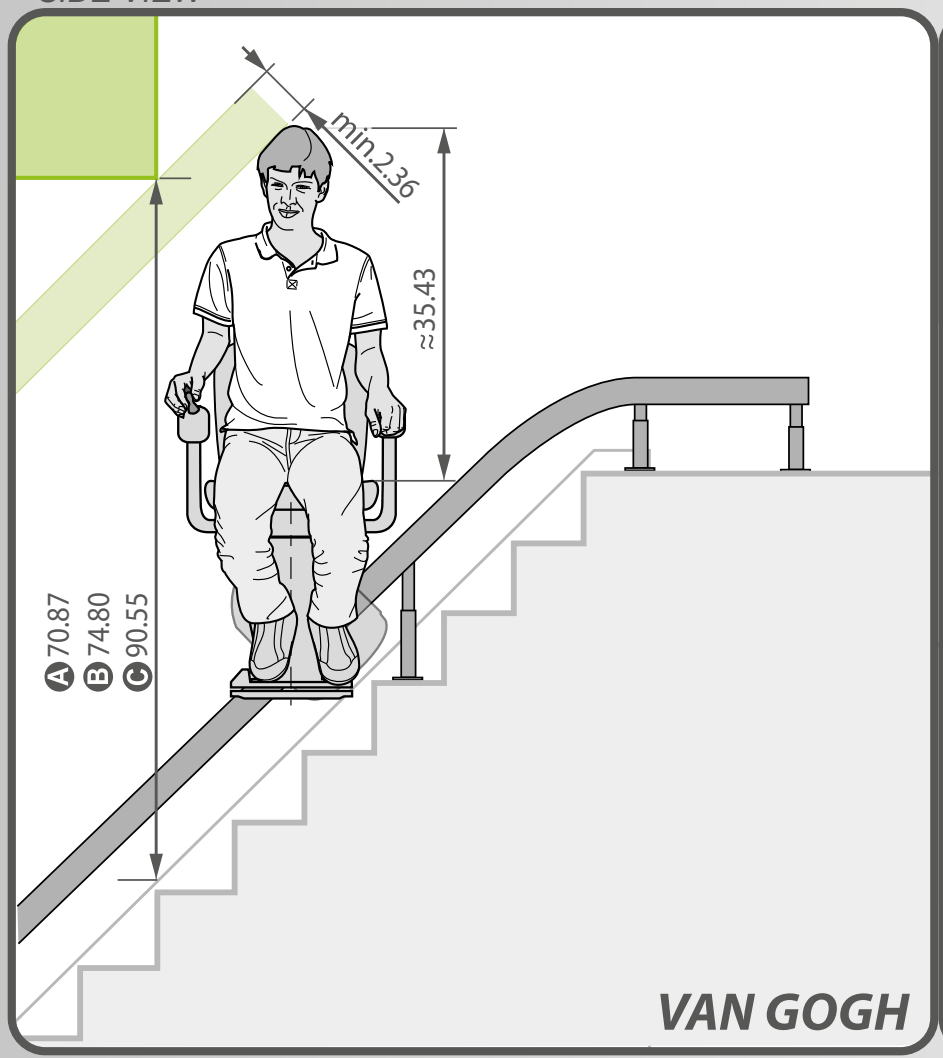

TOP VIEW

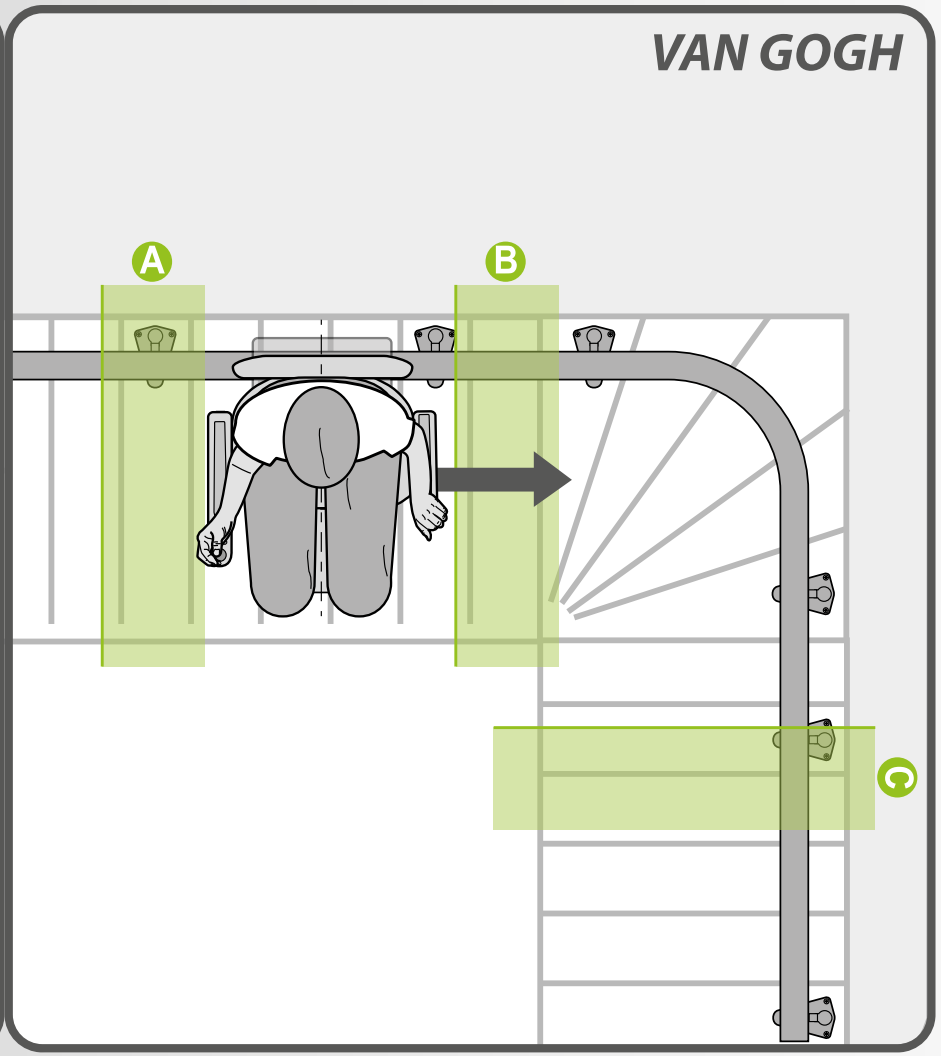

Rembrandt: Ⓐ/Ⓑ/Ⓒ +9.84 inch



Downstairs

BASIC FINISH

SIDE VIEW

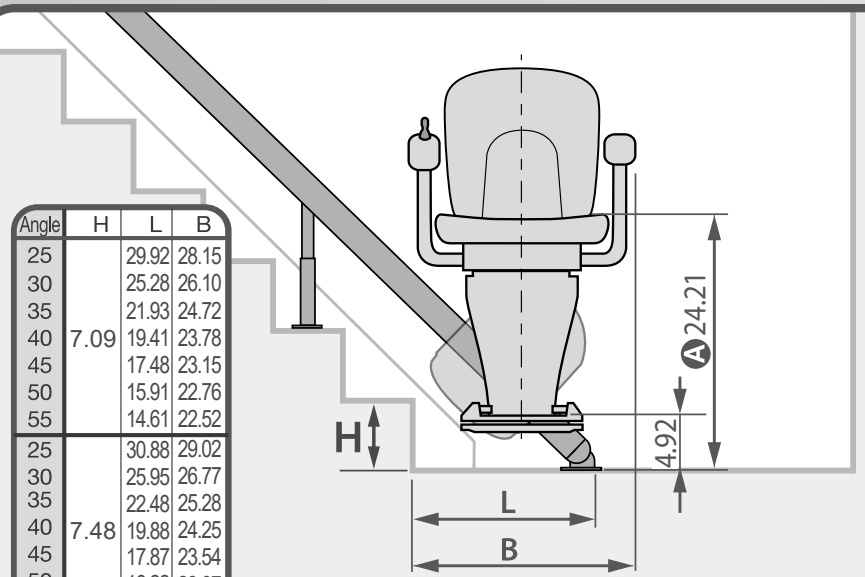

Angle	H	L	B
25	7.09	29.92	28.15
30		25.28	26.10
35		21.93	24.72
40		19.41	23.78
45		17.48	23.15
50		15.91	22.76
55		14.61	22.52
25	7.48	30.88	29.02
30		25.95	26.77
35		22.48	25.28
40		19.88	24.25
45		17.87	23.54
50		16.22	23.07
55		14.88	22.80
25	7.87	31.61	29.84
30		26.65	27.44
35		23.07	25.83
40		20.35	24.72
45		18.27	23.94
50		16.54	23.46
55		15.16	23.07
25	8.27	32.48	30.71
30		27.32	28.11
35		23.62	26.38
40		20.82	25.20
45		18.66	24.33
50		16.89	23.74
55		15.43	23.35

The length of the rail ending can be measured from the rail (**L**) or from the seat (**B**).

TOP VIEW

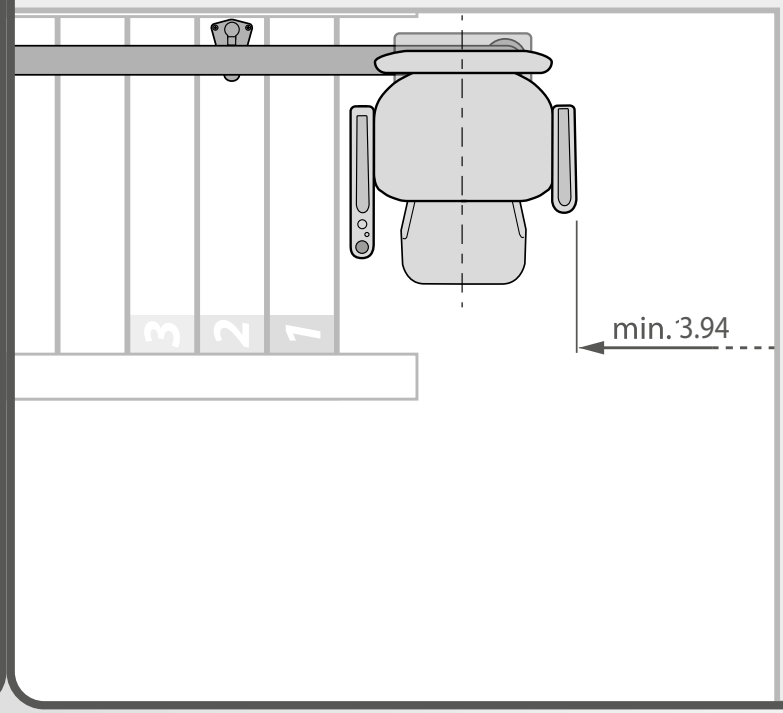

Ⓐ **Elegance:** 24.21 inch
Alliance: 24.21 inch
Classic: 23.62 inch

STANDARD 60º

SIDE VIEW

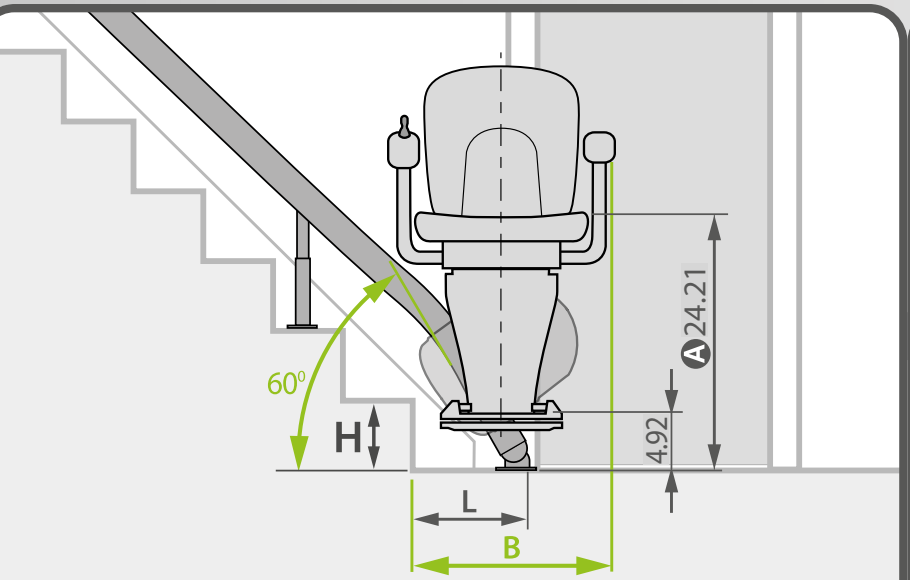

H	L	B
6.30	9.69	21.85
6.69	9.80	21.97
7.09	9.96	22.13
7.48	10.08	22.24
7.87	10.28	22.48
8.27	10.43	22.64
8.66	10.63	22.83
9.06	10.83	23.03
9.49	11.06	23.27

TOP VIEW

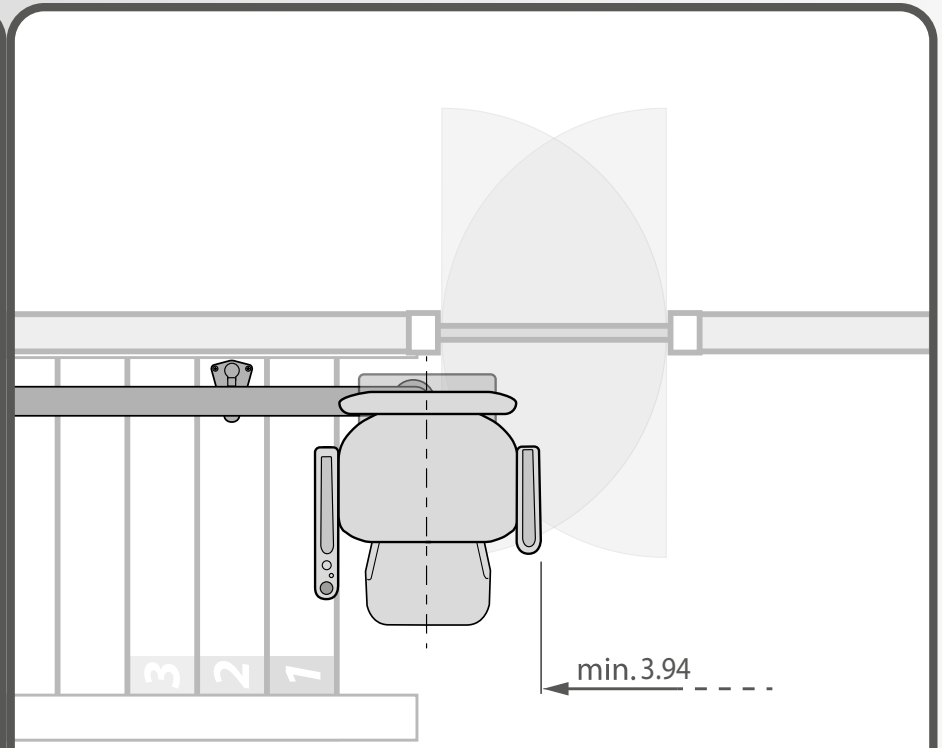

A Elegance: 24.21 inch
Alliance: 24.21 inch
Classic: 23.62 inch

DOWNSTAIRS

BASIC FINISH
STANDARD 60º
SHORT RAILEND
SHORT R_+guard
SHORT R_+charge
HINGE_Van Gogh
HINGE_Rembrandt
SPECIFIEK LENGTH
90º PARK_St.
90º PARK_Hor.
180º PARK_St.
180º PARK_Hor.
FIRST STAIR STEP

SHORT RAILENDING

SIDE VIEW

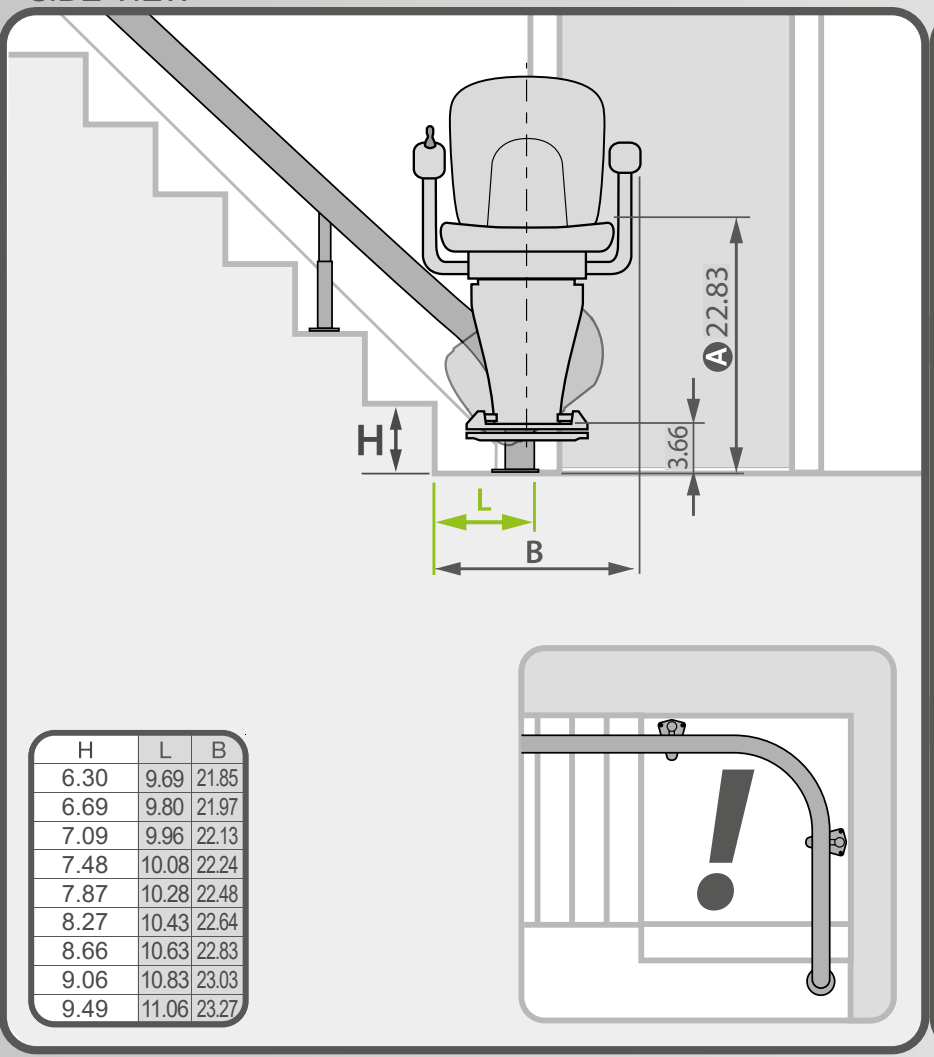

H	L	B
6.30	9.69	21.85
6.69	9.80	21.97
7.09	9.96	22.13
7.48	10.08	22.24
7.87	10.28	22.48
8.27	10.43	22.64
8.66	10.63	22.83
9.06	10.83	23.03
9.49	11.06	23.27

TOP VIEW

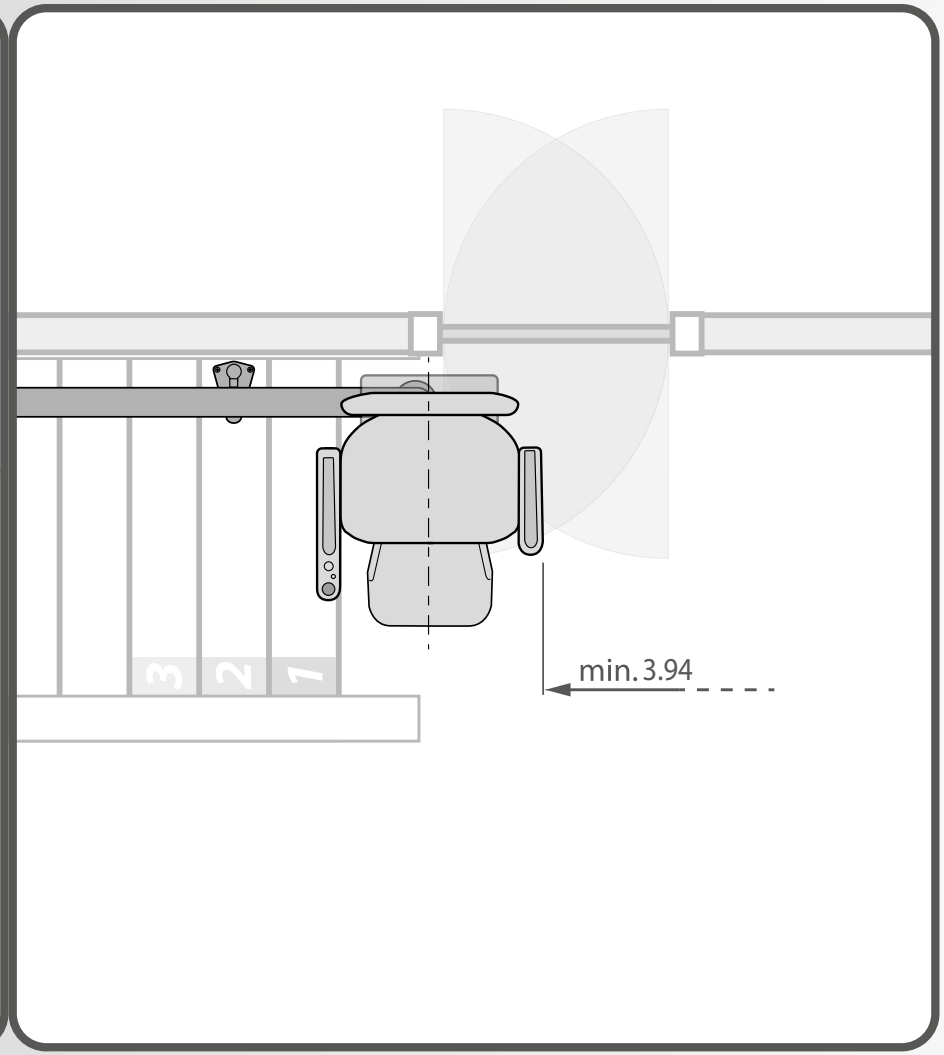

A **Elegance/Alliance:** 22.83 inch
Classic: 22.24 inch

! a short rail ending at the bottom of the stairs in combination with an intermediate landing on the 2nd or 3rd step will increase the height of the bend over this landing.

SHORT RAILENDING_+*guard*

SIDE VIEW

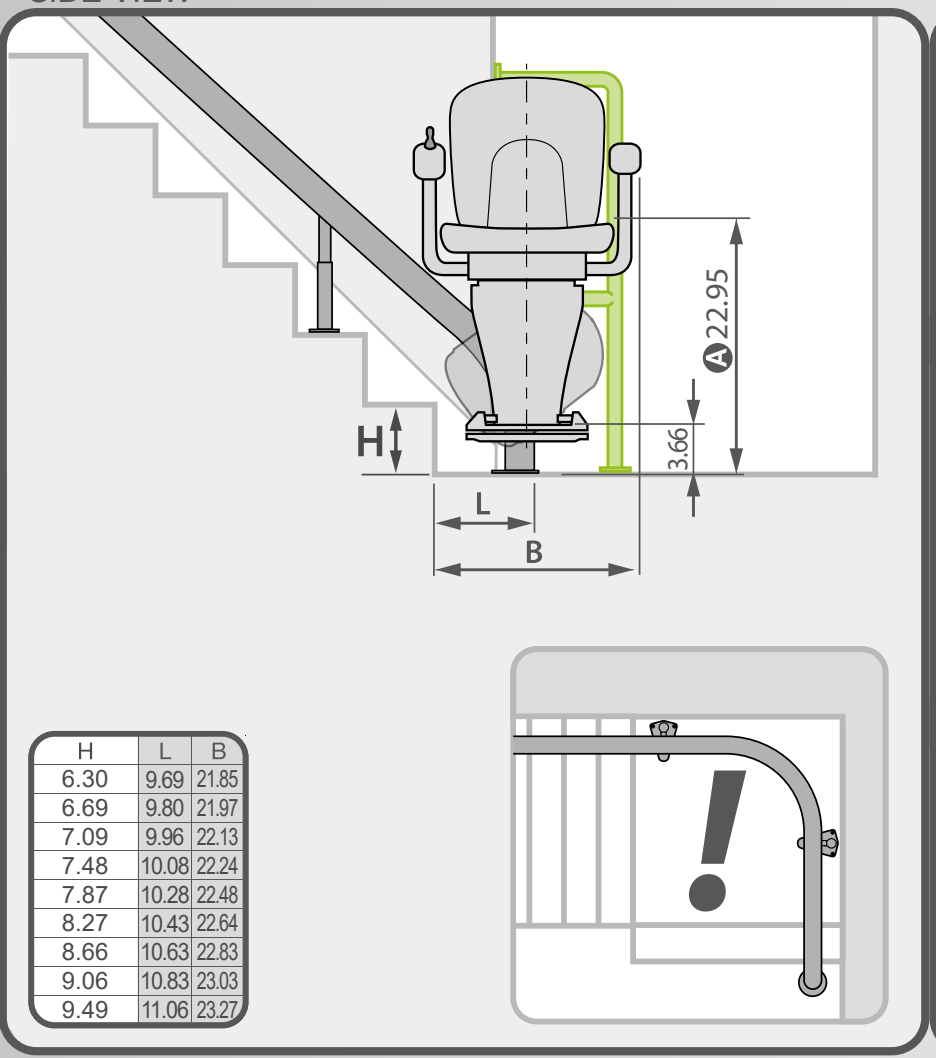

H	L	B
6.30	9.69	21.85
6.69	9.80	21.97
7.09	9.96	22.13
7.48	10.08	22.24
7.87	10.28	22.48
8.27	10.43	22.64
8.66	10.63	22.83
9.06	10.83	23.03
9.49	11.06	23.27

TOP VIEW

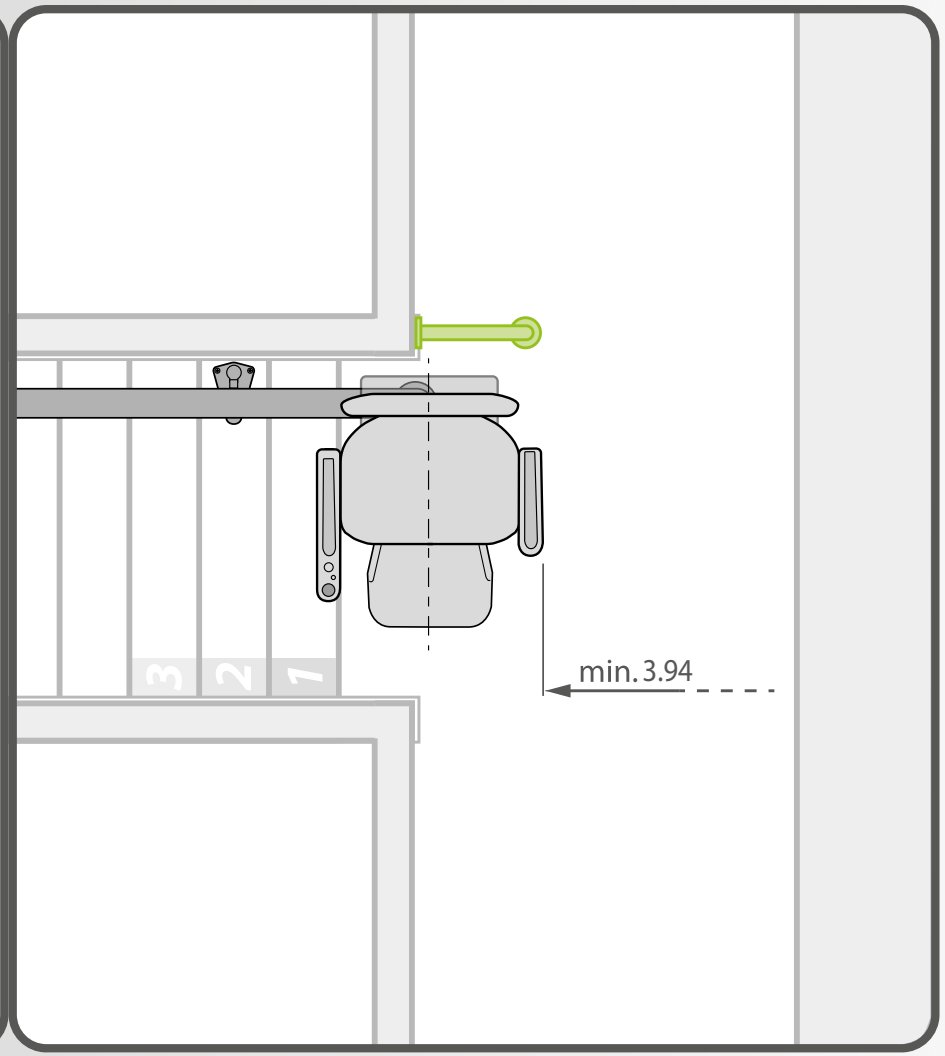

A **Elegance/Alliance:** 22.95 inch
Classic: 22.36 inch

Guard in several dimensions, see **http://linidosolutions.nl/**

handicare

SHORT RAILENDING_+*charge point*

SIDE VIEW

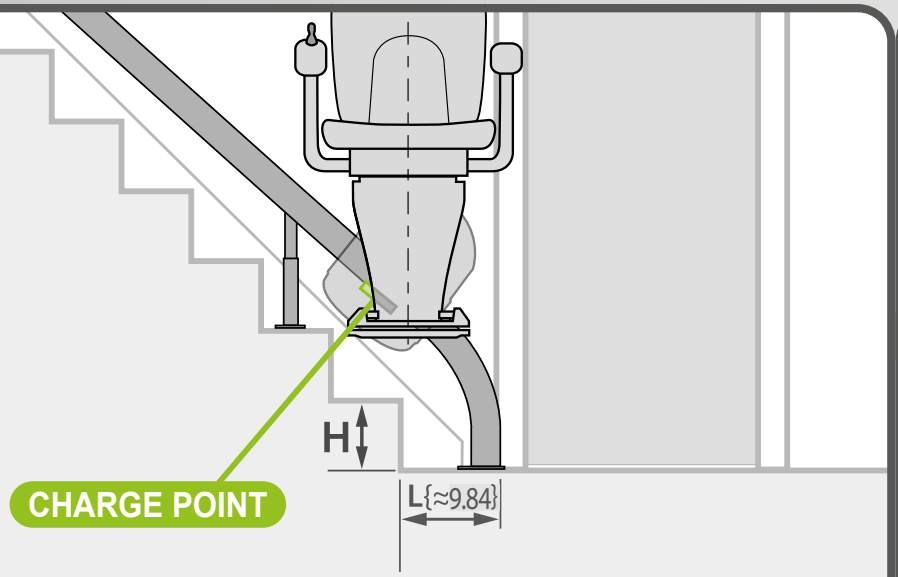

H	L
6.30	9.69
6.69	9.80
7.09	9.96
7.48	10.08
7.87	10.28
8.27	10.43
8.66	10.63
9.06	10.83
9.49	11.06

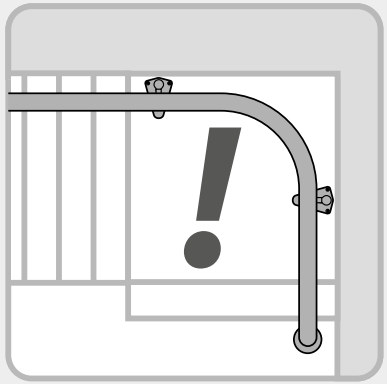

TOP VIEW

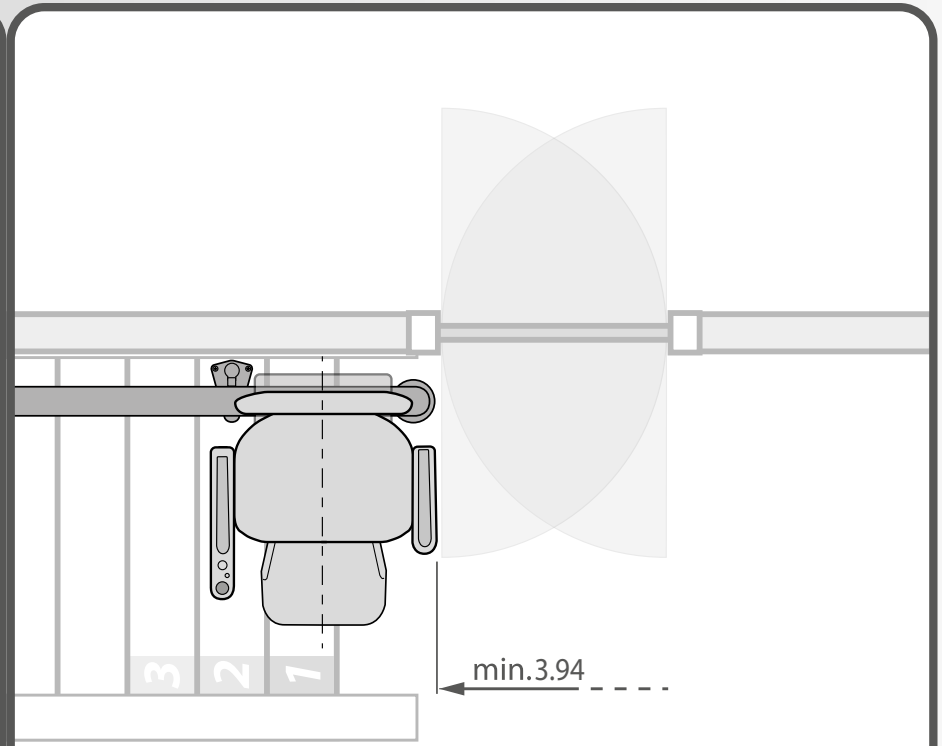

Extra charge stoppoint to clear the door (way).

HINGE_*van Gogh*

SIDE VIEW

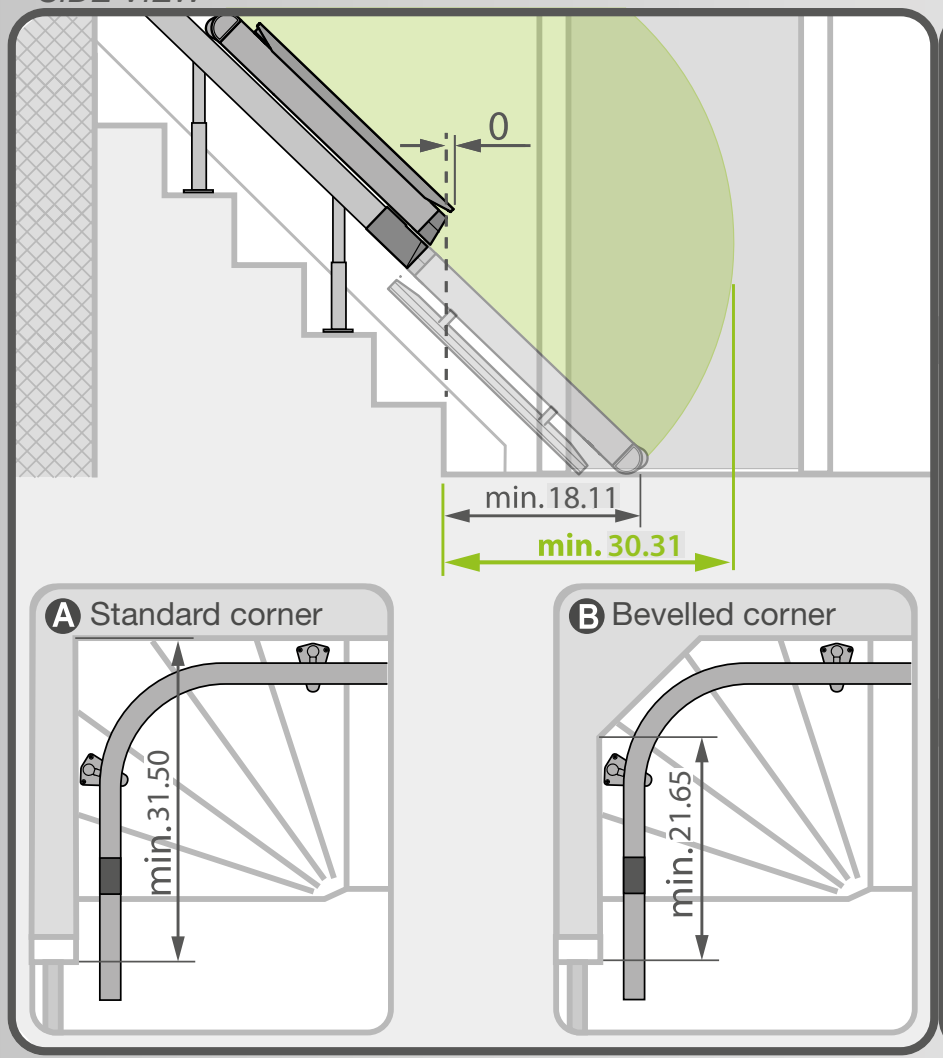

TOP VIEW

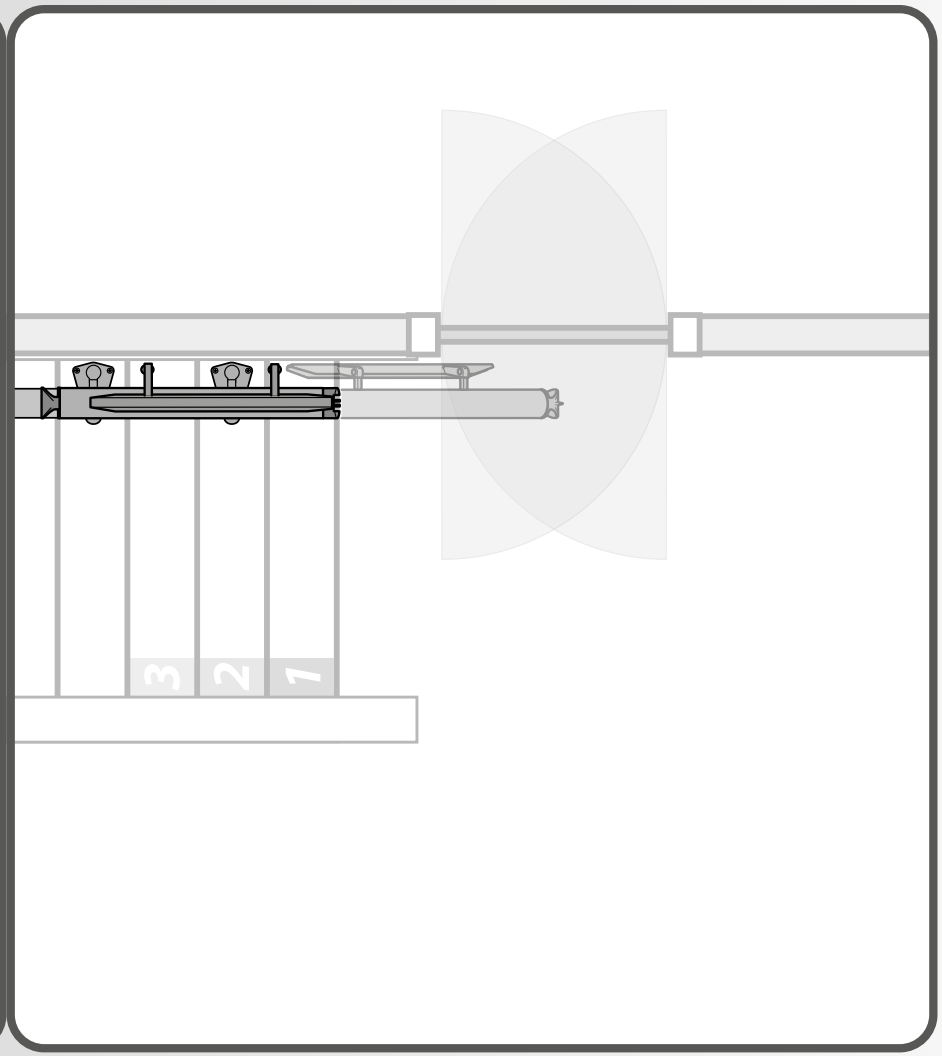

A When horizontal wall length is more than 31.50 inch, the rail is completely on the stairs.
B When horizontal wall length is more than 21.65 inch, the rail is completely on the stairs.

HINGE_*Rembrandt*

SIDE VIEW

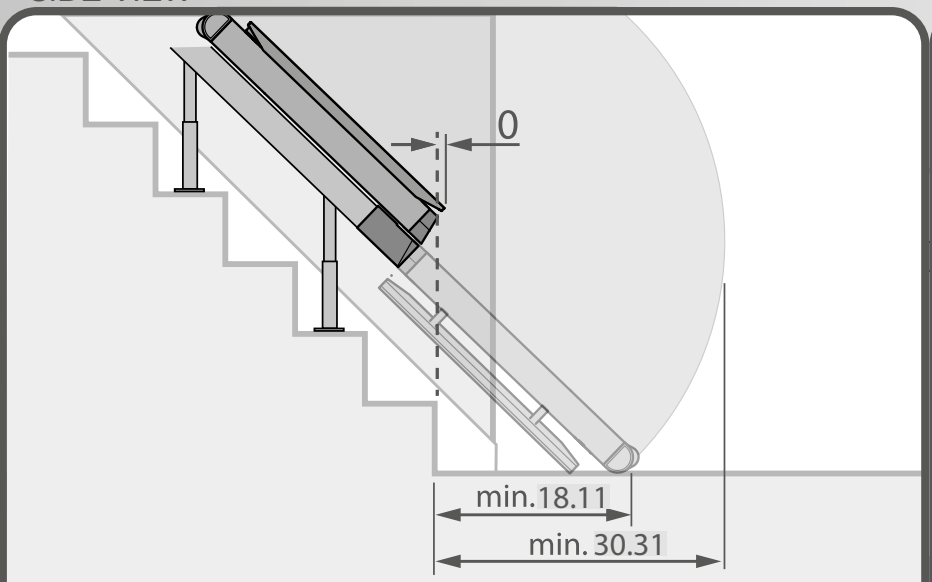

TOP VIEW

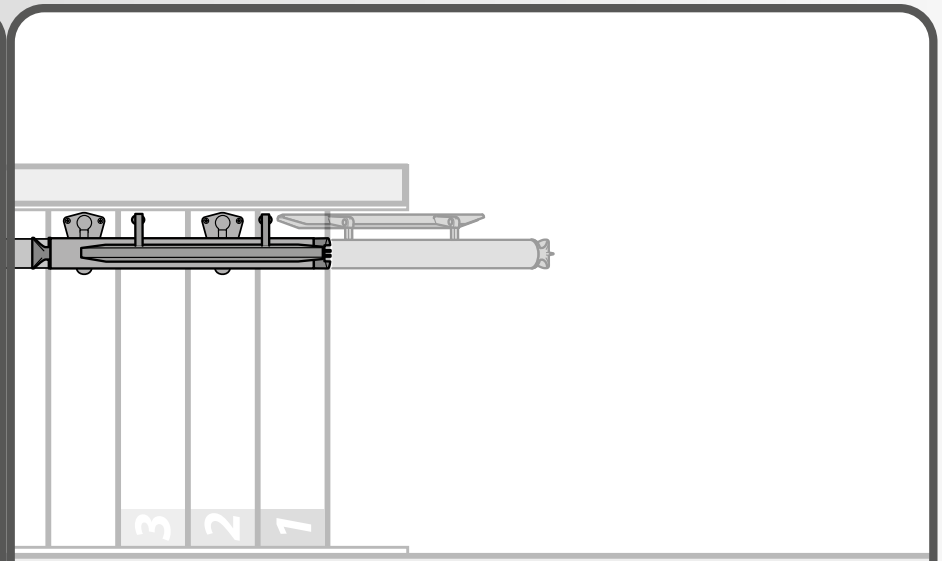

A Stair type: **C / D / E / F**

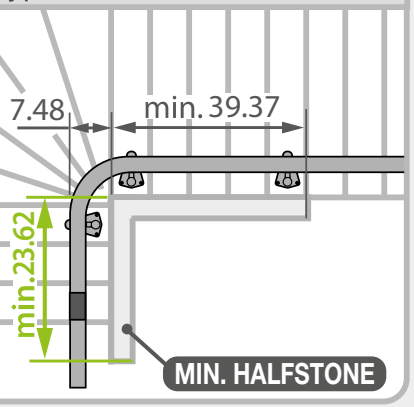

B Stair type: **G / H**

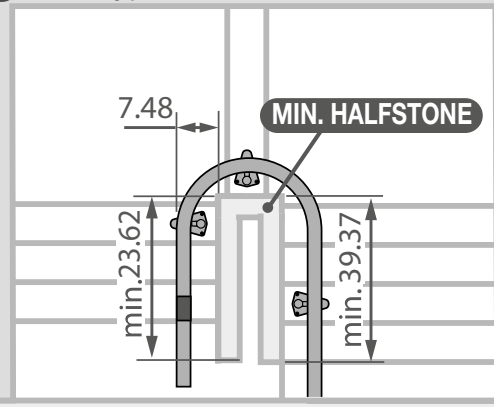

A Rembrandt lift with hinge requires **wall(brackets).**

DOWNSTAIRS

BASIC FINISH

STANDARD 60°

SHORT RAILEND

SHORT R_+guard

SHORT R_+charge

HINGE_*Van Gogh*

HINGE_*Rembrandt*

SPECIFIEK LENGTH

90° PARK_*St.*

90° PARK_*Hor.*

180° PARK_*St.*

180° PARK_*Hor.*

FIRST STAIR STEP

SPECIFIC LENGTH

SIDE VIEW

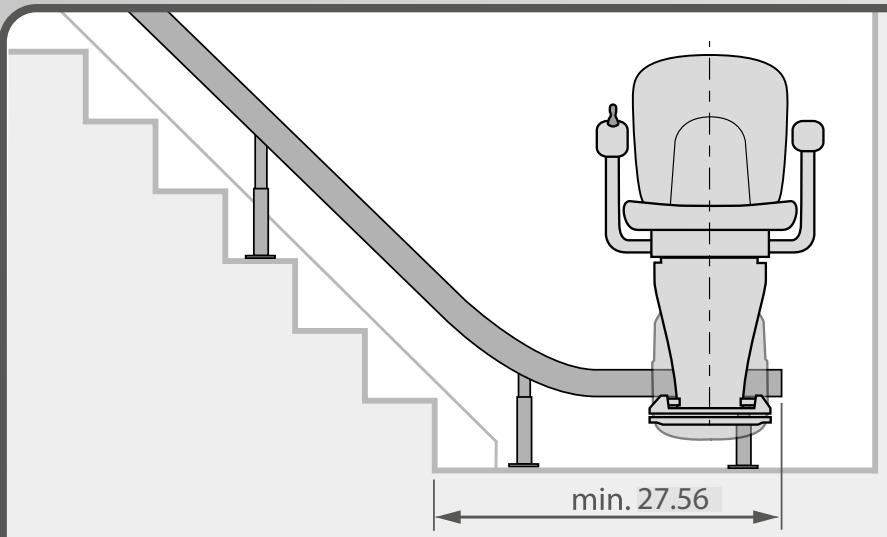

TOP VIEW

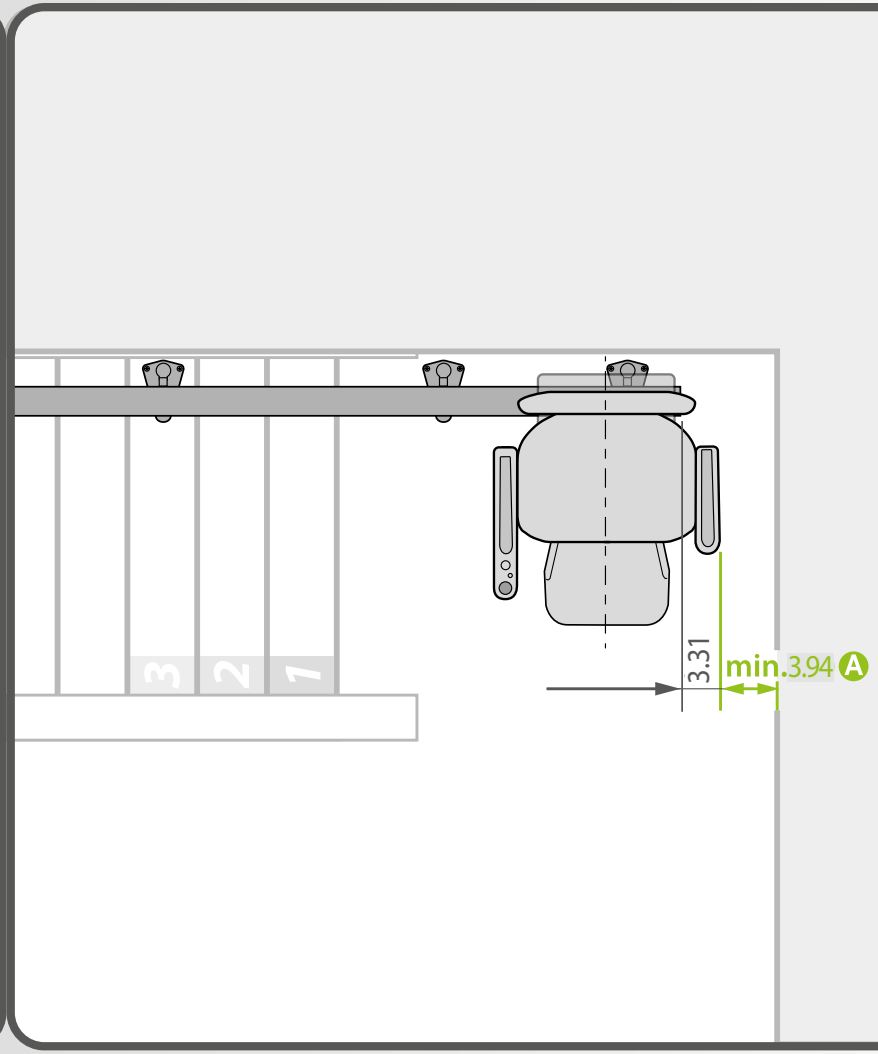

The length of the rail ending can be measured from the rail (**L**) or from the seat (**B**).

Ⓐ To prevent the underarm from getting squeezed between the armrest and the opposite wall.

90º PARK INSIDE_*standard*

SIDE VIEW

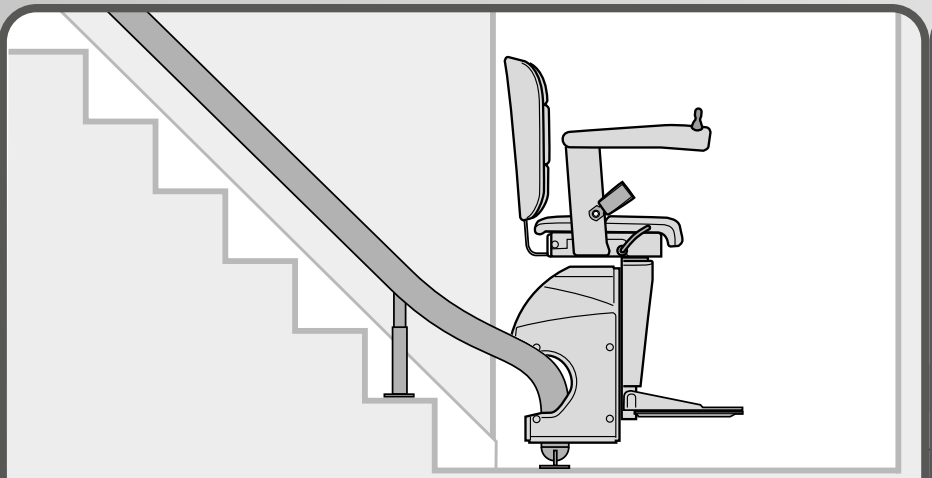

TOP VIEW

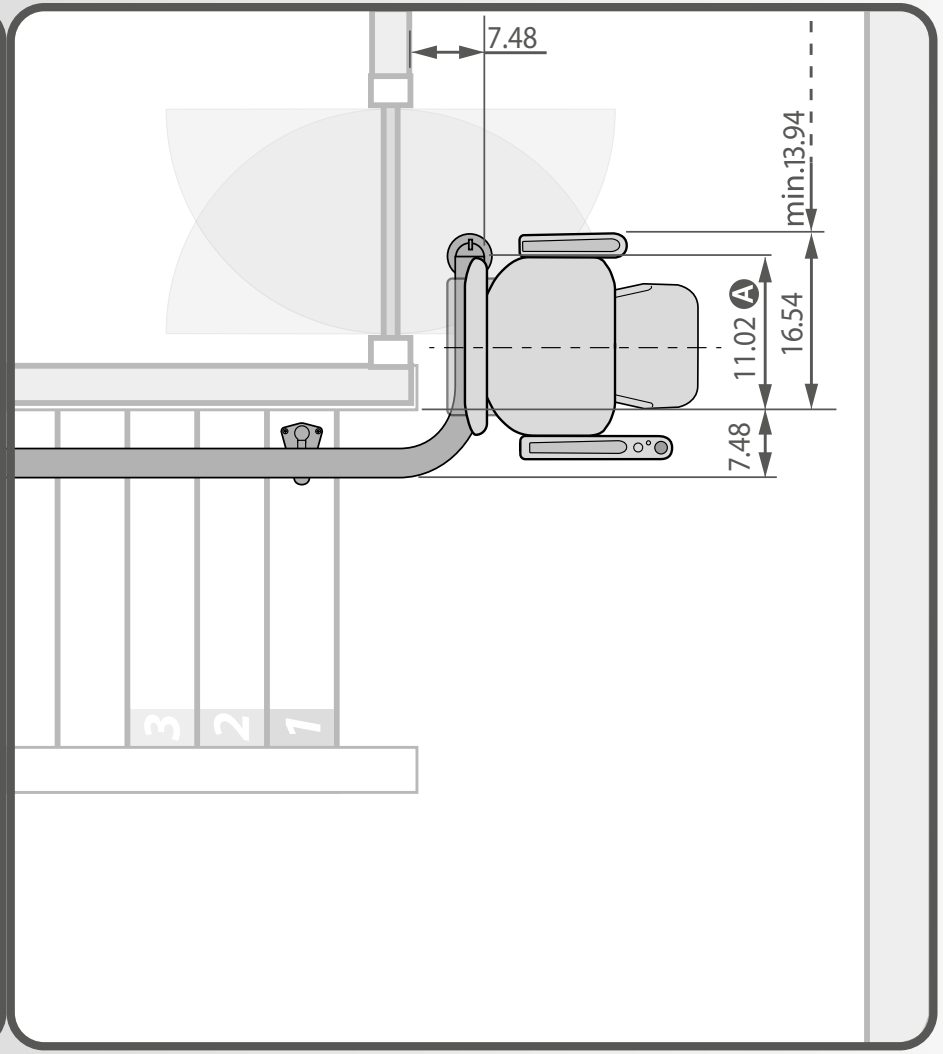

Ⓐ Size necessary to have the chair in line with the wall.
90º PARK is not available in combination with a short railending.

DOWNSTAIRS

BASIC FINISH
STANDARD 60º
SHORT RAILEND
SHORT R_*+guard*
SHORT R_*+charge*
HINGE_*Van Gogh*
HINGE_*Rembrandt*
SPECIFIEK LENGTH
90º PARK_*St.*
90º PARK_*Hor.*
180º PARK_*St.*
180º PARK_*Hor.*
FIRST STAIR STEP

90º PARK INSIDE_*horizontal*

SIDE VIEW

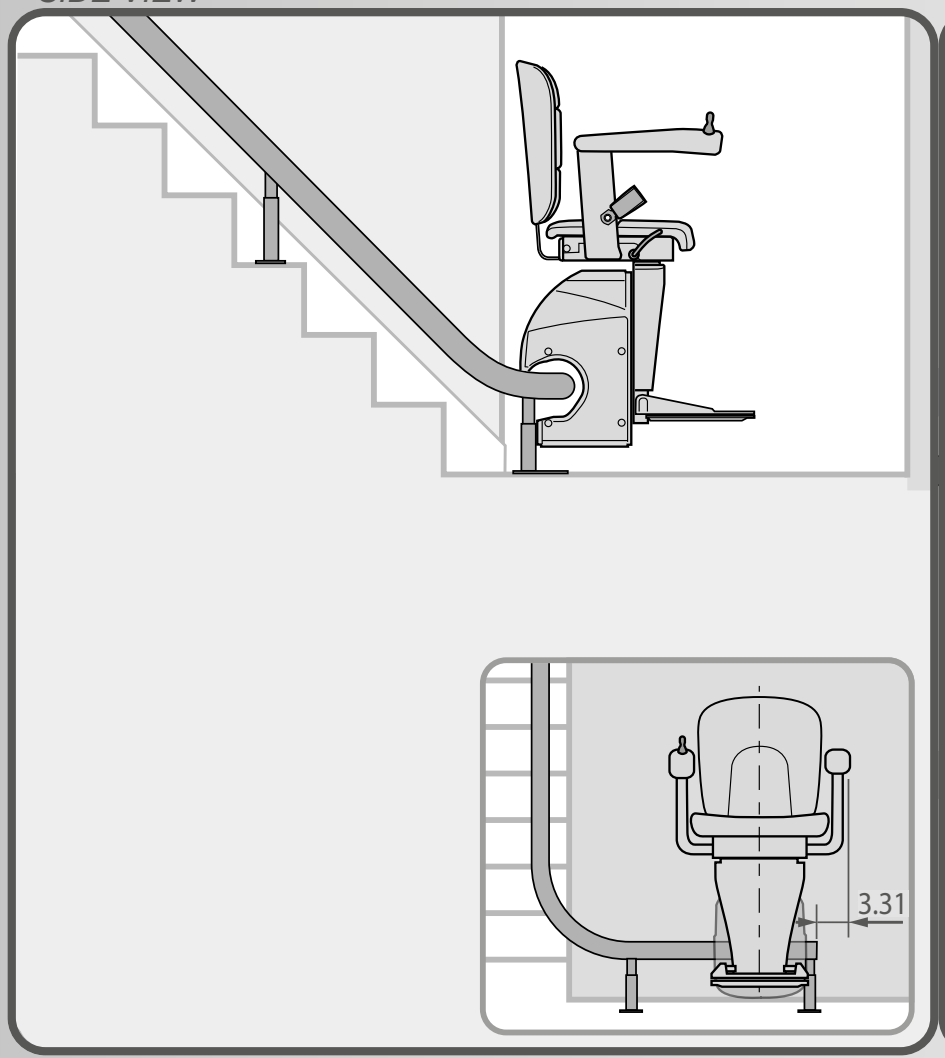

TOP VIEW

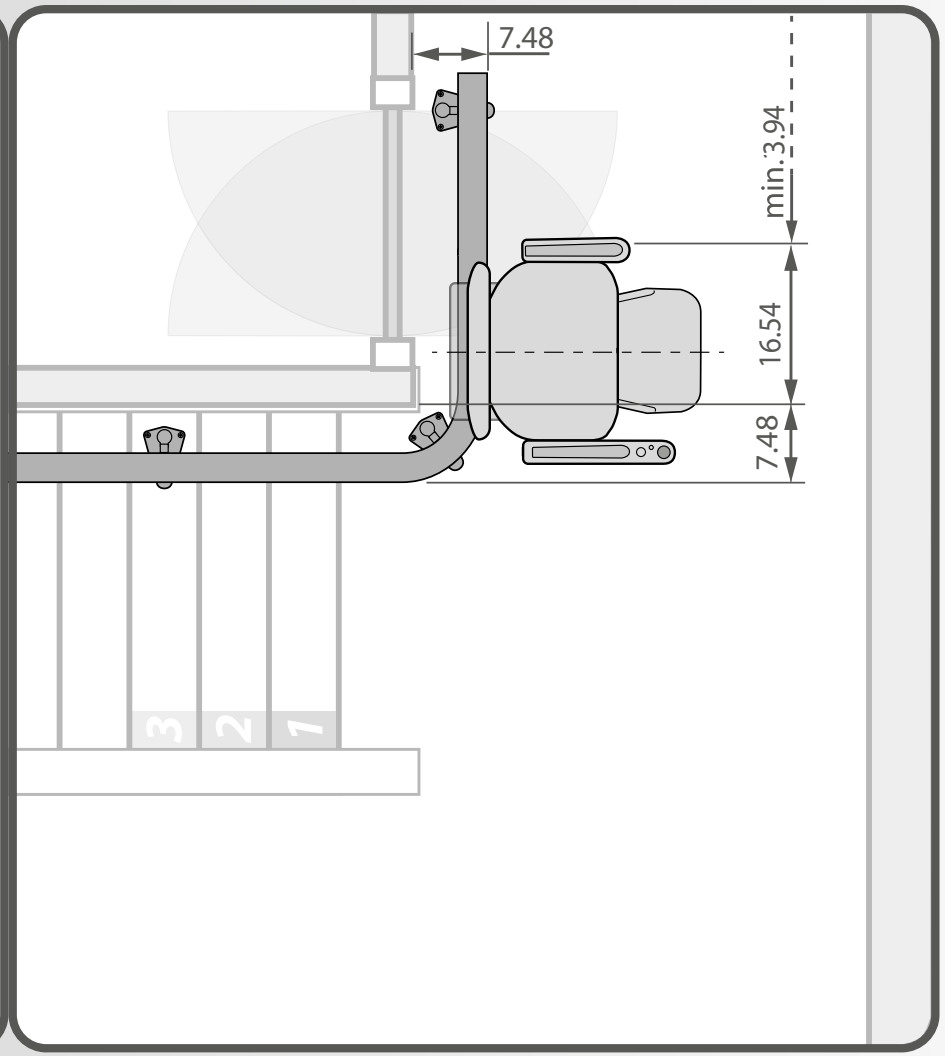

180º PARK INSIDE_*standard*

SIDE VIEW

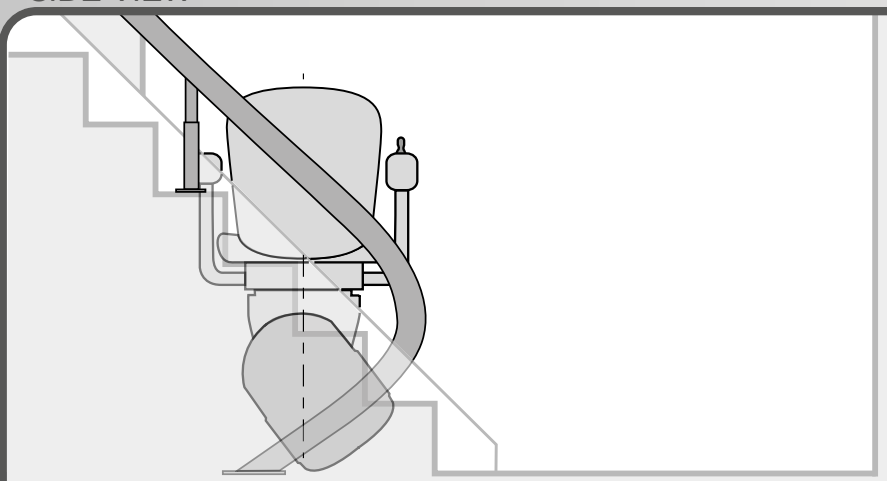

TOP VIEW

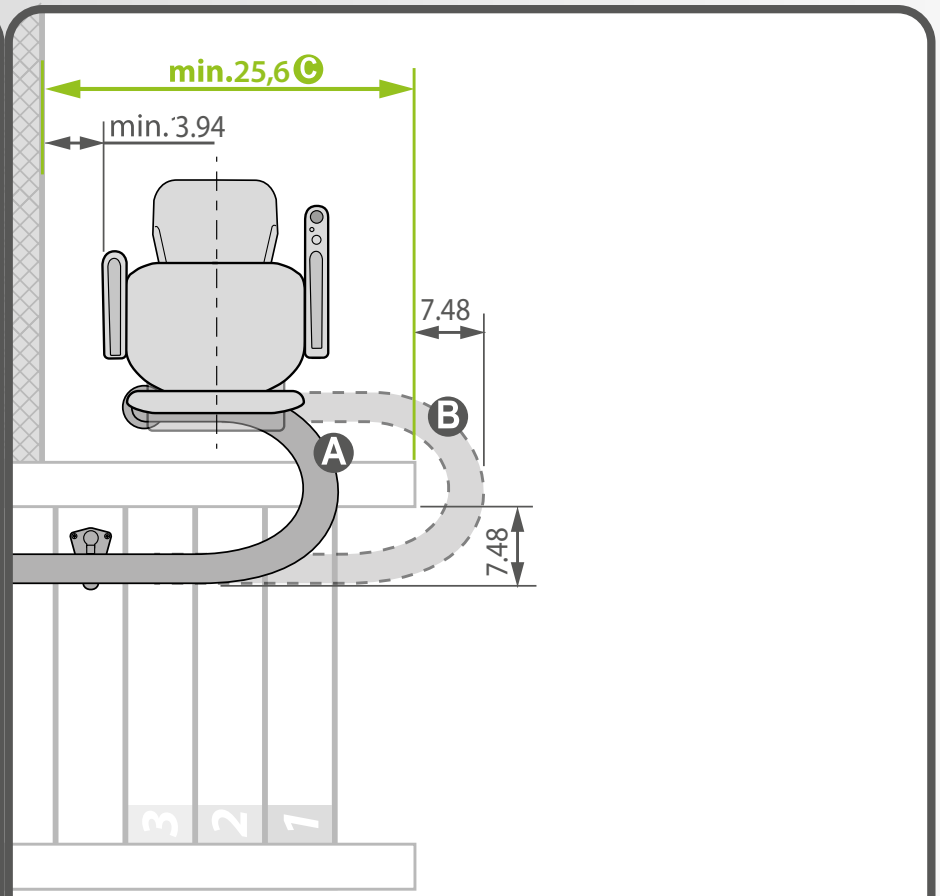

Ⓐ Rail over stringer (if the rail goes over the stringer, don't forget to measure the stringer with obstacle markers).
Ⓑ Rail around wall.
Ⓒ Size necessary to have the chair in line with the wall.
Distance varies and is depending on the angle of the rail.

180º PARK INSIDE_*horizontal*

SIDE VIEW

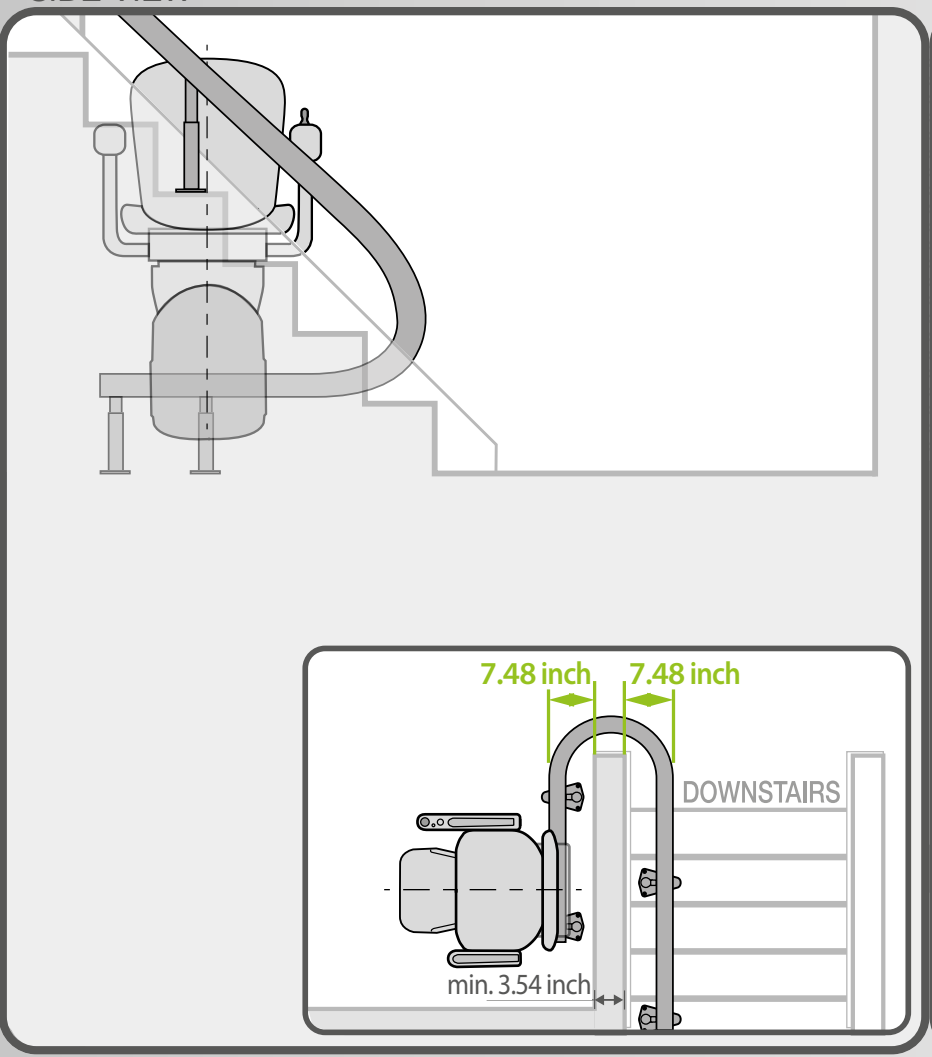

TOP VIEW

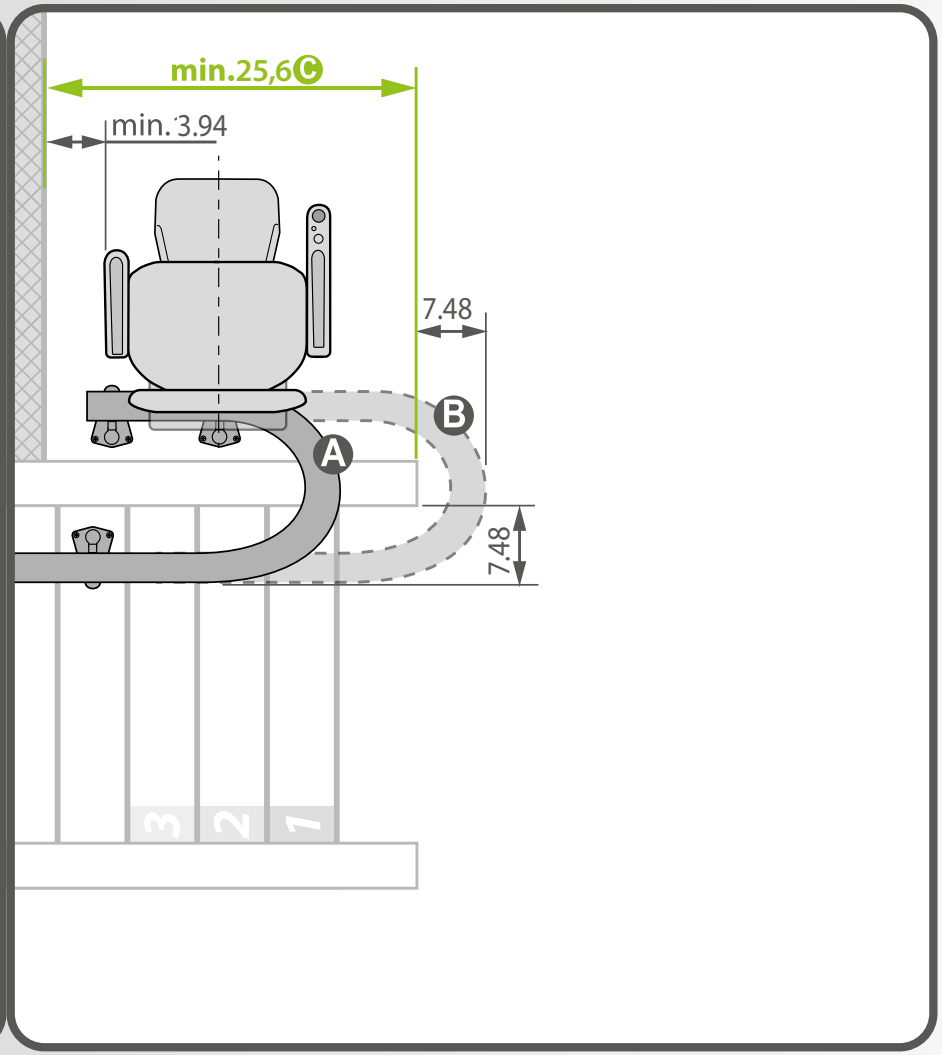

Ⓐ Rail over stringer (if the rail goes over the stringer, don't forget to measure the stringer with obstacle markers).

Ⓑ Rail around wall.

Ⓒ Size necessary to have the chair in line with the wall.

FIRST STAIR STEP

SIDE VIEW

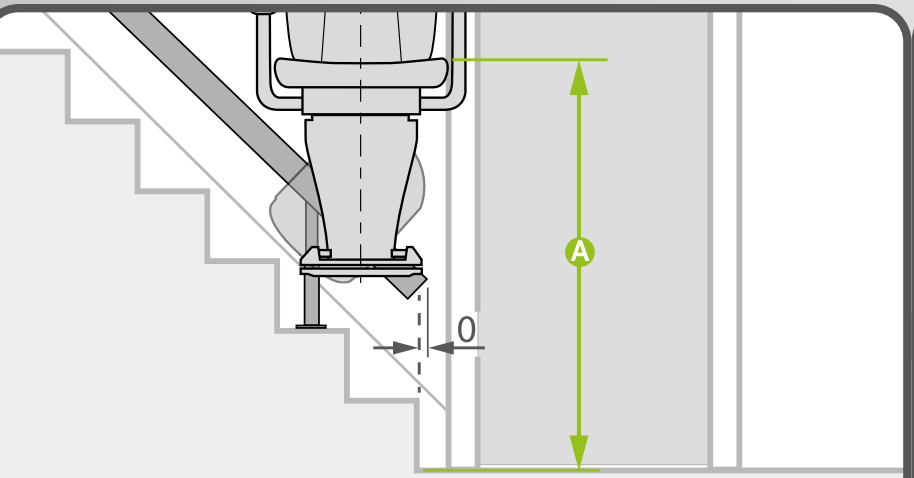

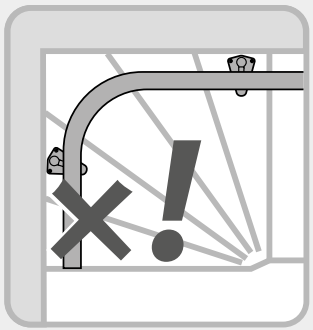

TOP VIEW

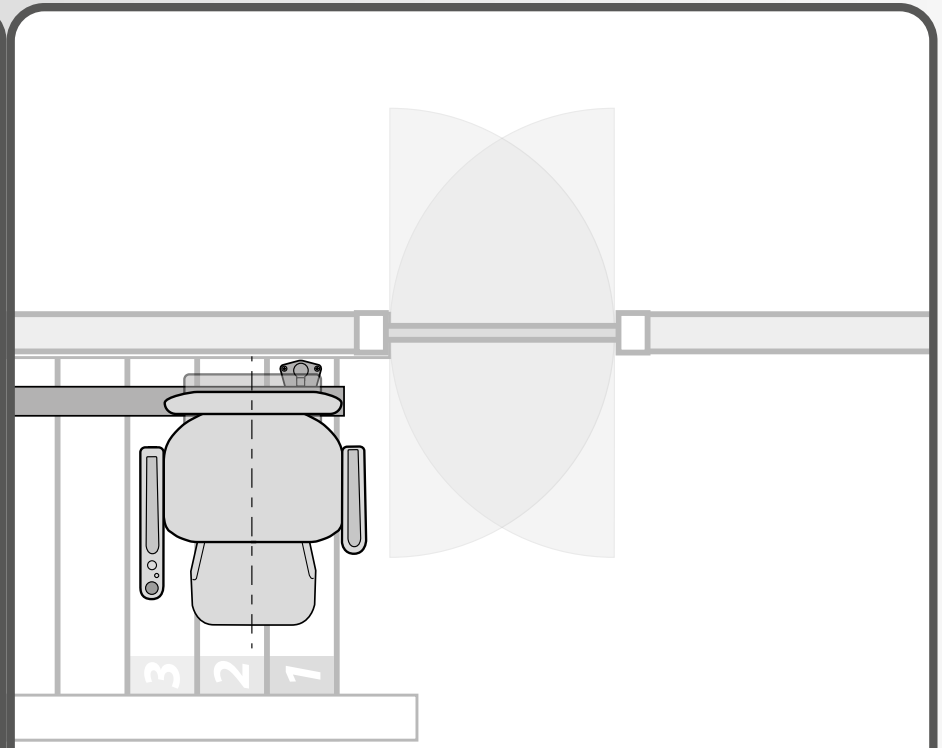

Ⓐ Not recommended because of high seat.



Upstairs

STANDARD

SIDE VIEW

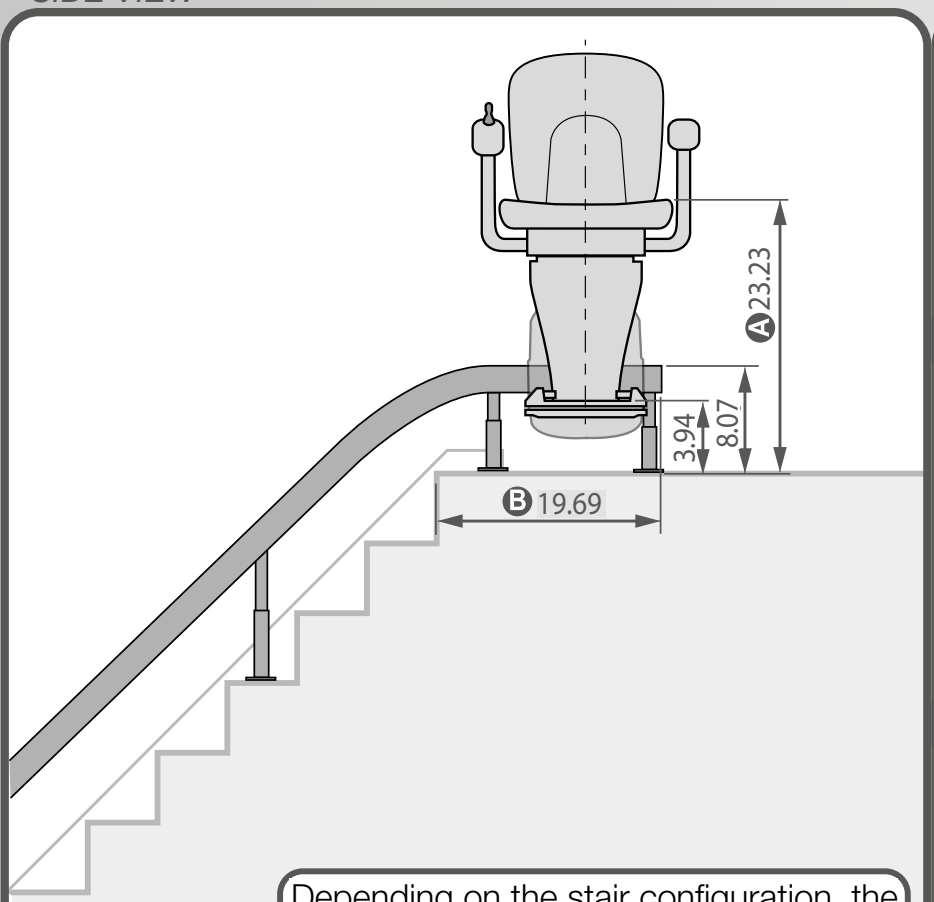

Depending on the stair configuration, the measure is 24.2/9.25/4.92 inch , to keep the rail as low as possible on the stairs.

TOP VIEW

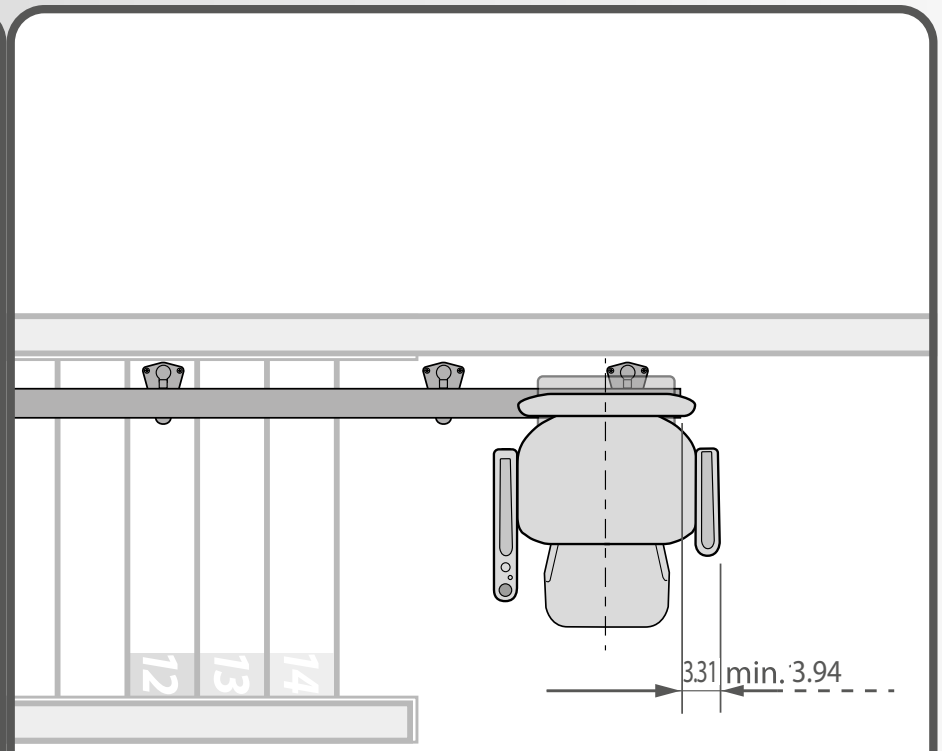

Ⓐ **Elegance:** 23.23 inch
Alliance: 23.23 inch
Classic: 22.64 inch

Ⓑ 19.69 inch is recommended. Shorter or longer is possible. When shorter the chair needs to be swivelled before getting on/off.

EXTENSION ‘0’

SIDE VIEW

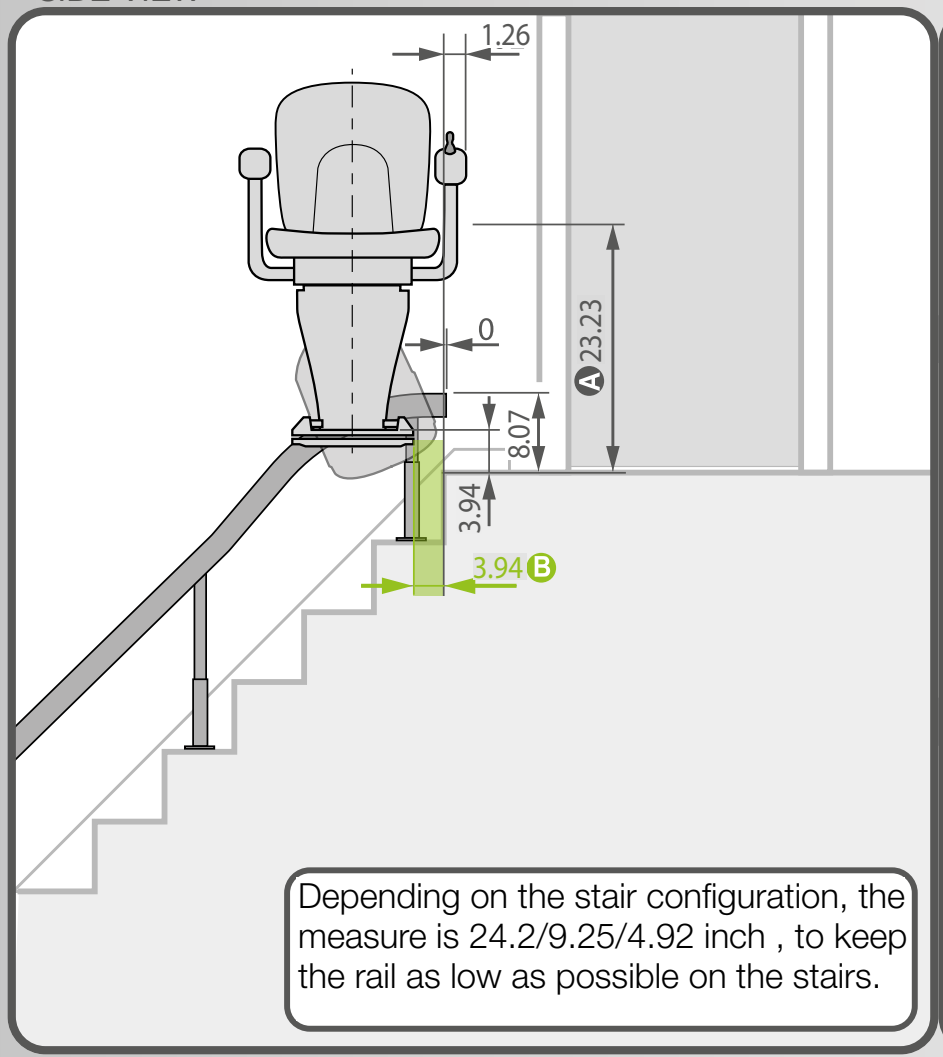

TOP VIEW

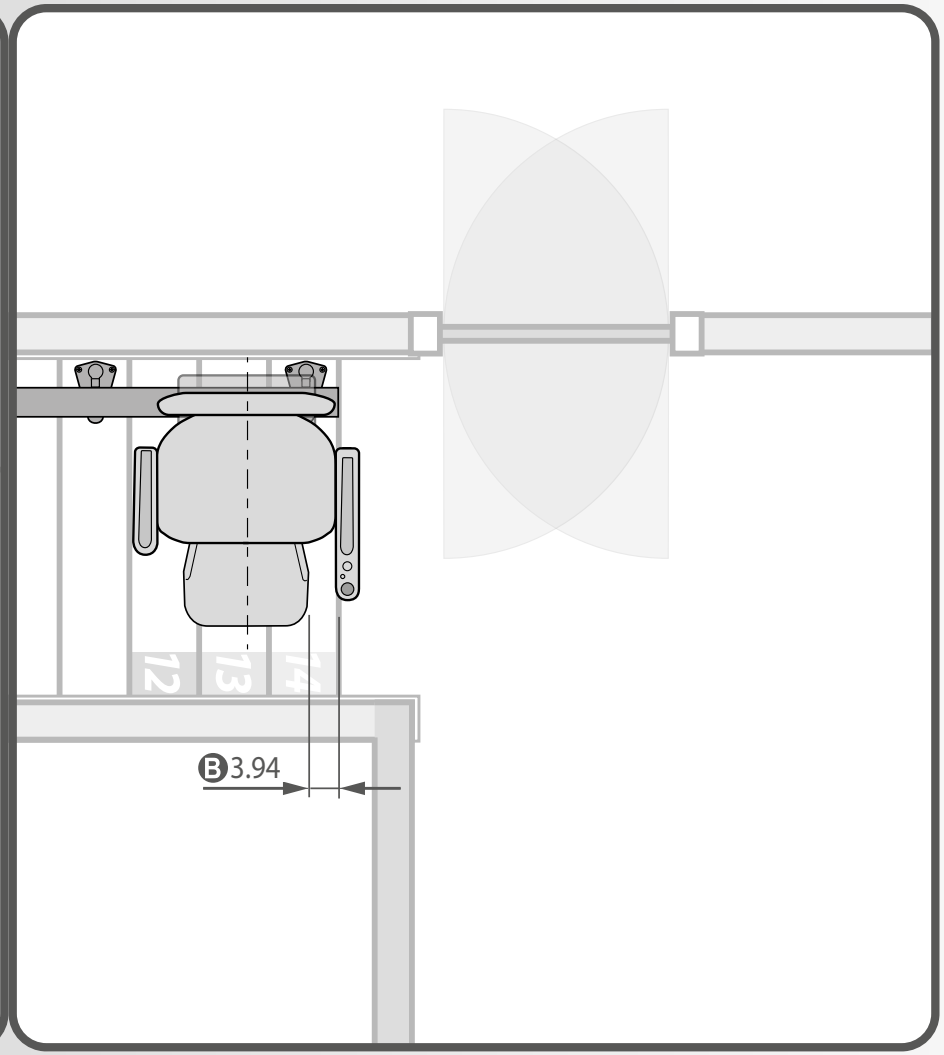

A Elegance: 23.23 inch
Alliance: 23.23 inch
Classic: 22.64 inch

B Gap: not save to use.

FOOTREST ‘0’

SIDE VIEW

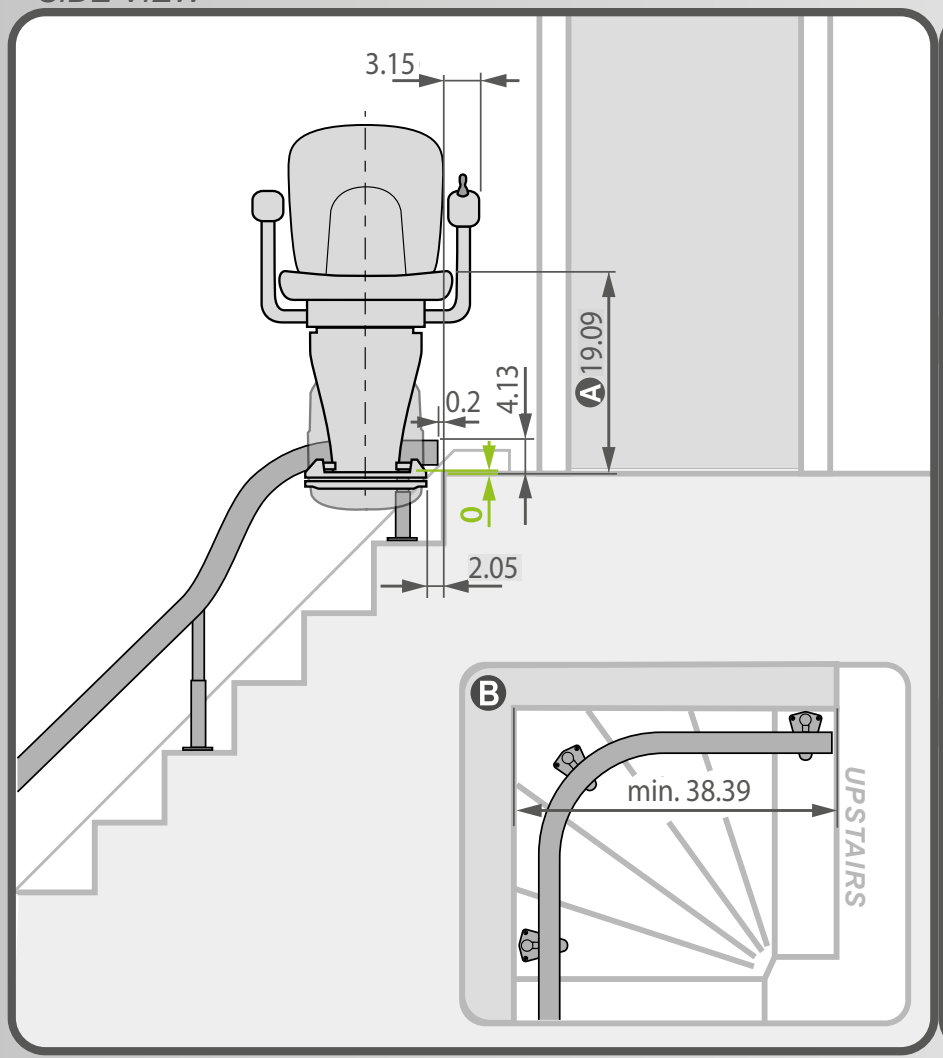

TOP VIEW

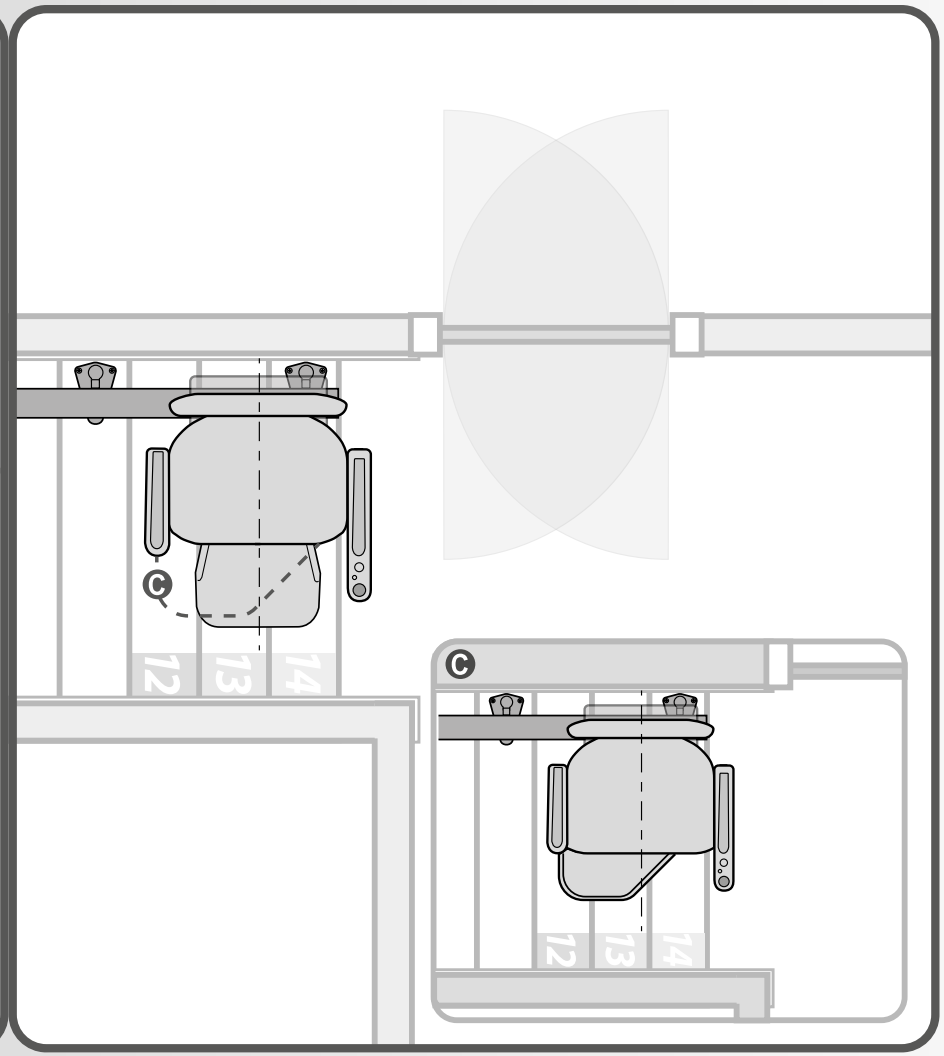

A Elegance/Alliance: 19.09 inch
Classic: 18.50 inch

Advice: Large footrest !

C Footrest level in combination with an extended footrest creates a large gap/tripping hazard. Maintenance and service requires rail deinstall. Configuration not applicable on a Rembrandt.

STANDARD_+*guard*

SIDE VIEW

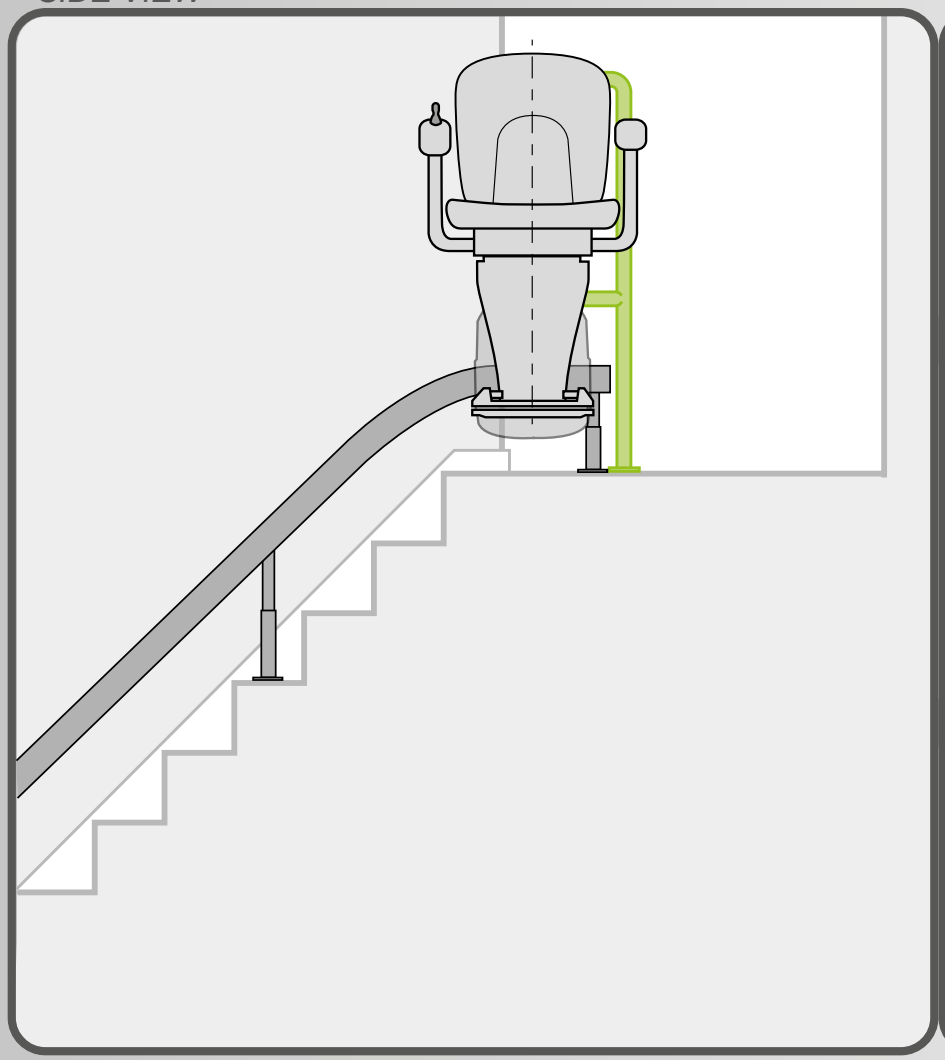

TOP VIEW

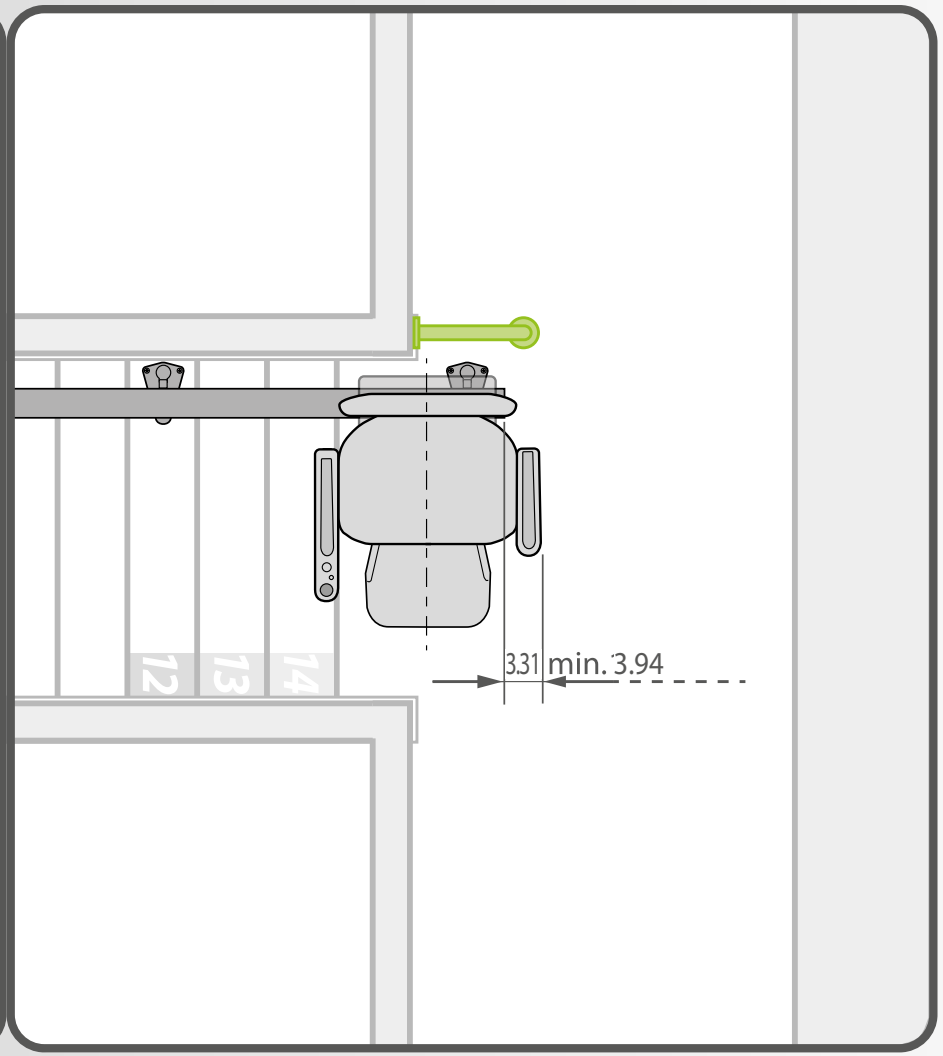

Guard to prevent stumbling over the rail.

DOOR IN FRONT

SIDE VIEW

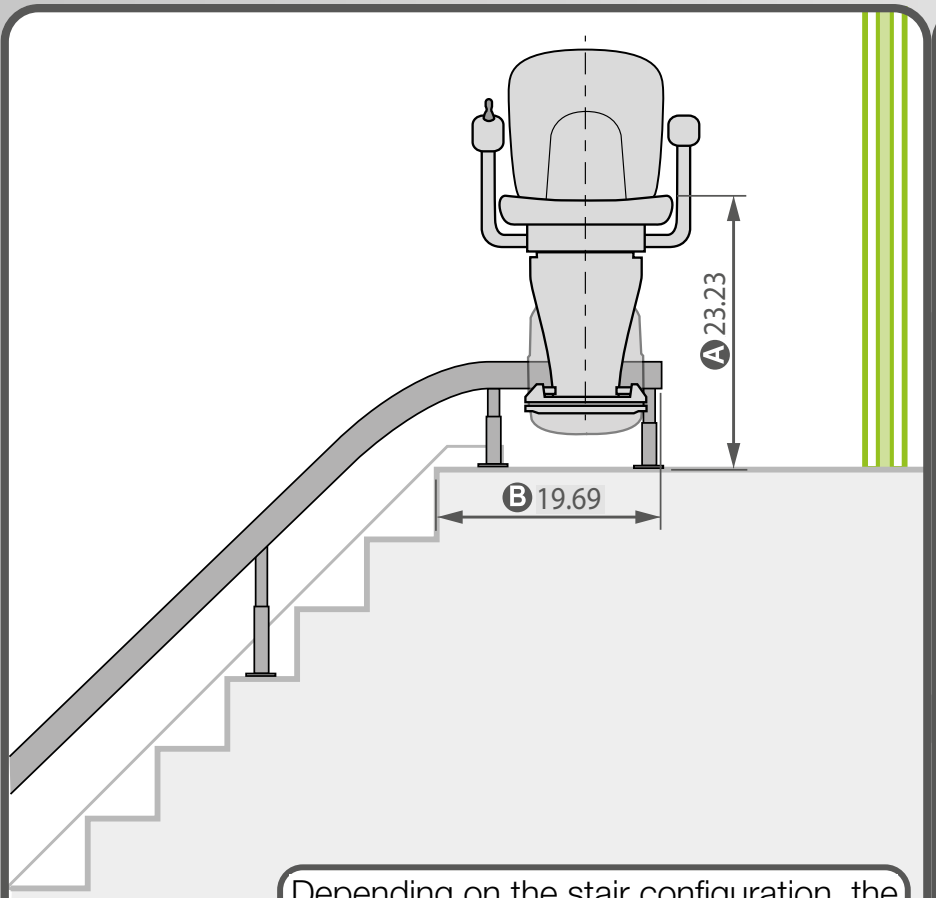

Depending on the stair configuration, the measure is 24.2 inch , to keep the rail as low as possible on the stairs.

TOP VIEW

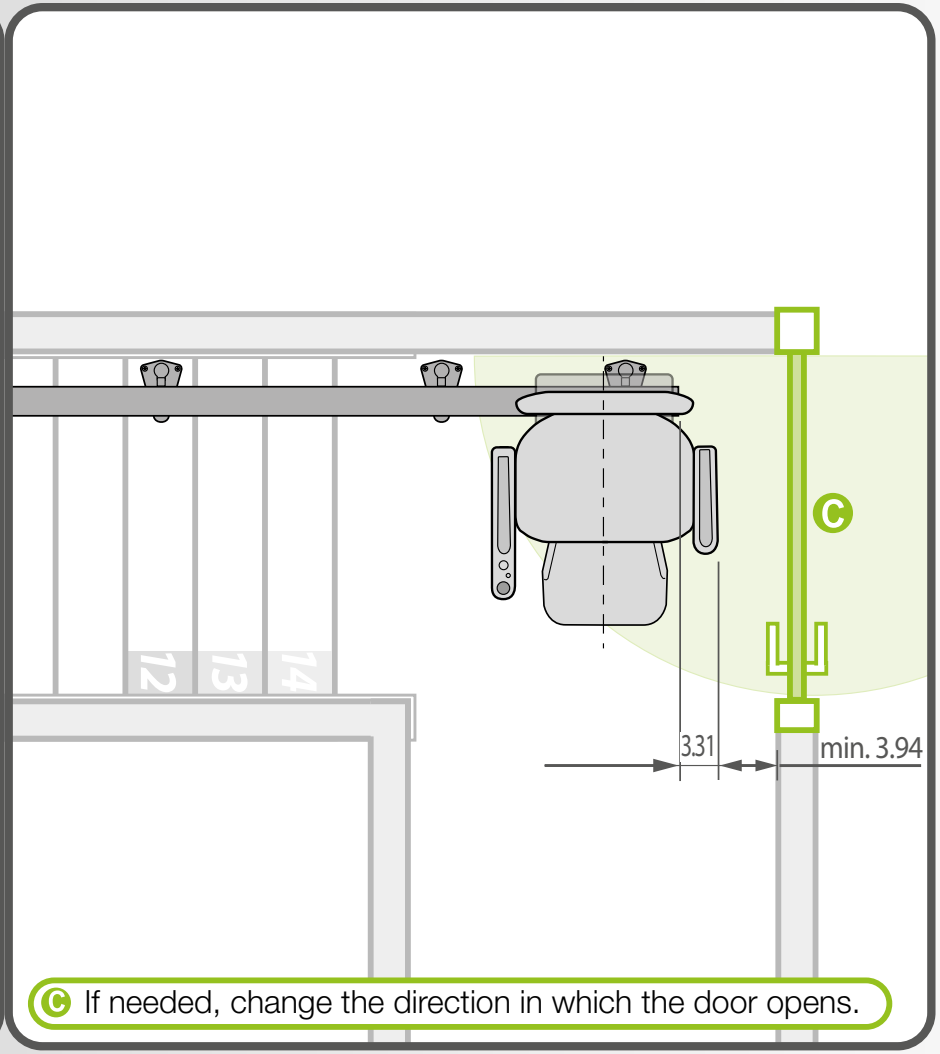

C If needed, change the direction in which the door opens.

A **Elegance:** 23.23 inch
Alliance: 23.23 inch
Classic: 22.64 inch

B 19.69 inch is recommended. Shorter or longer is possible. When shorter the chair needs to be swivelled before getting on/off.

ALLEY

SIDE VIEW

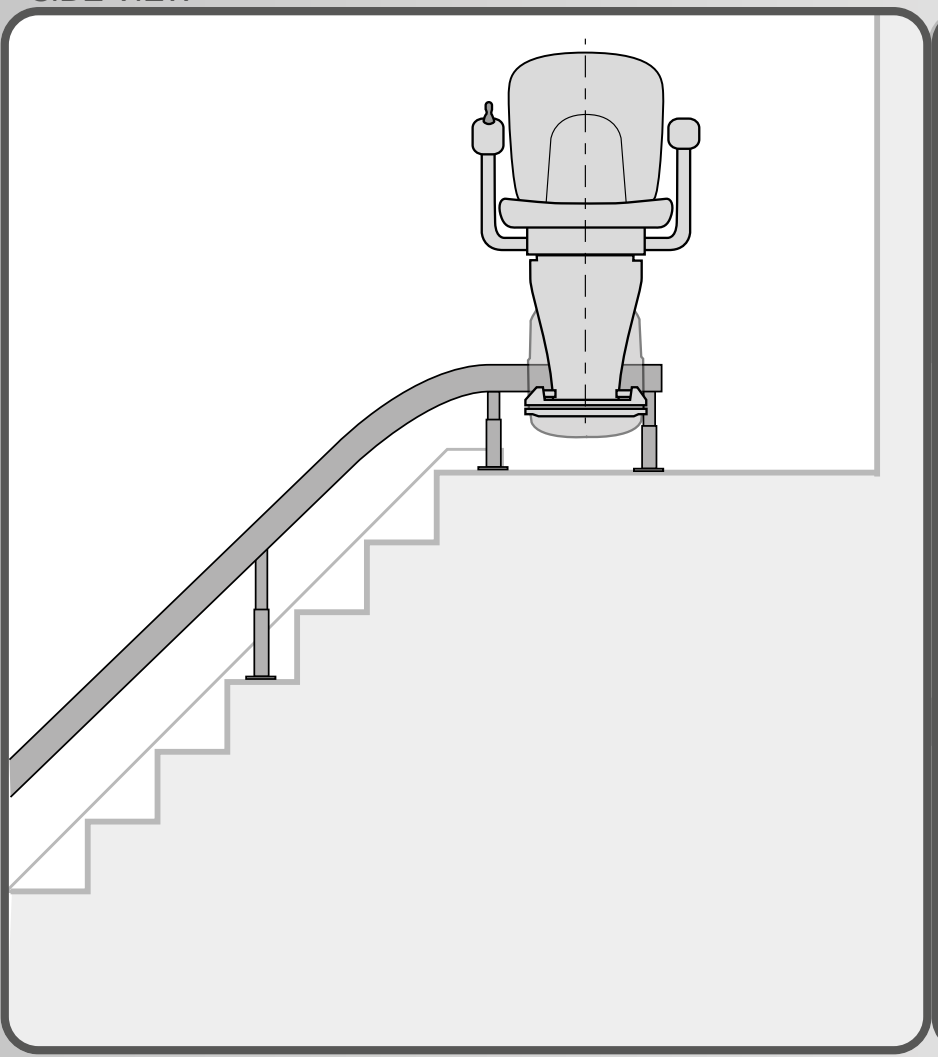

TOP VIEW

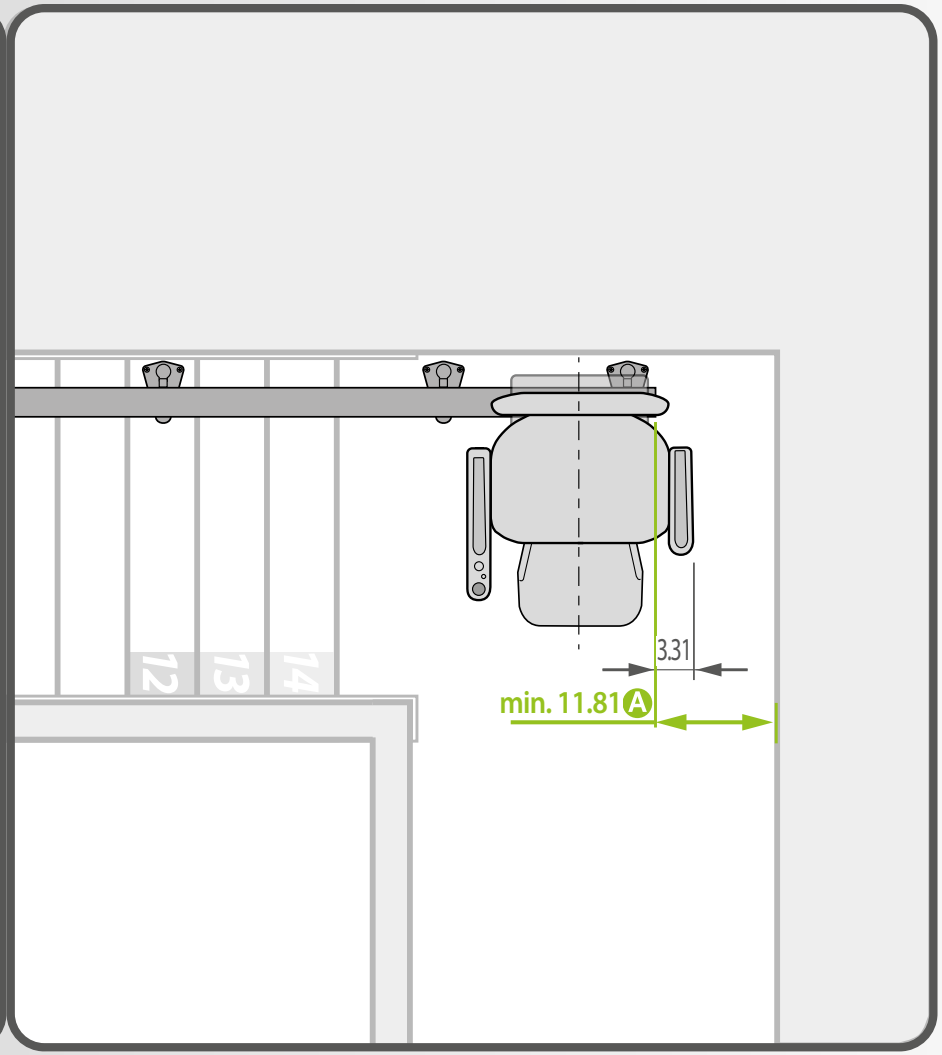

A Clearance is needed for service and installation.

handicare

ANGLE ENDING_*van gogh*

SIDE VIEW

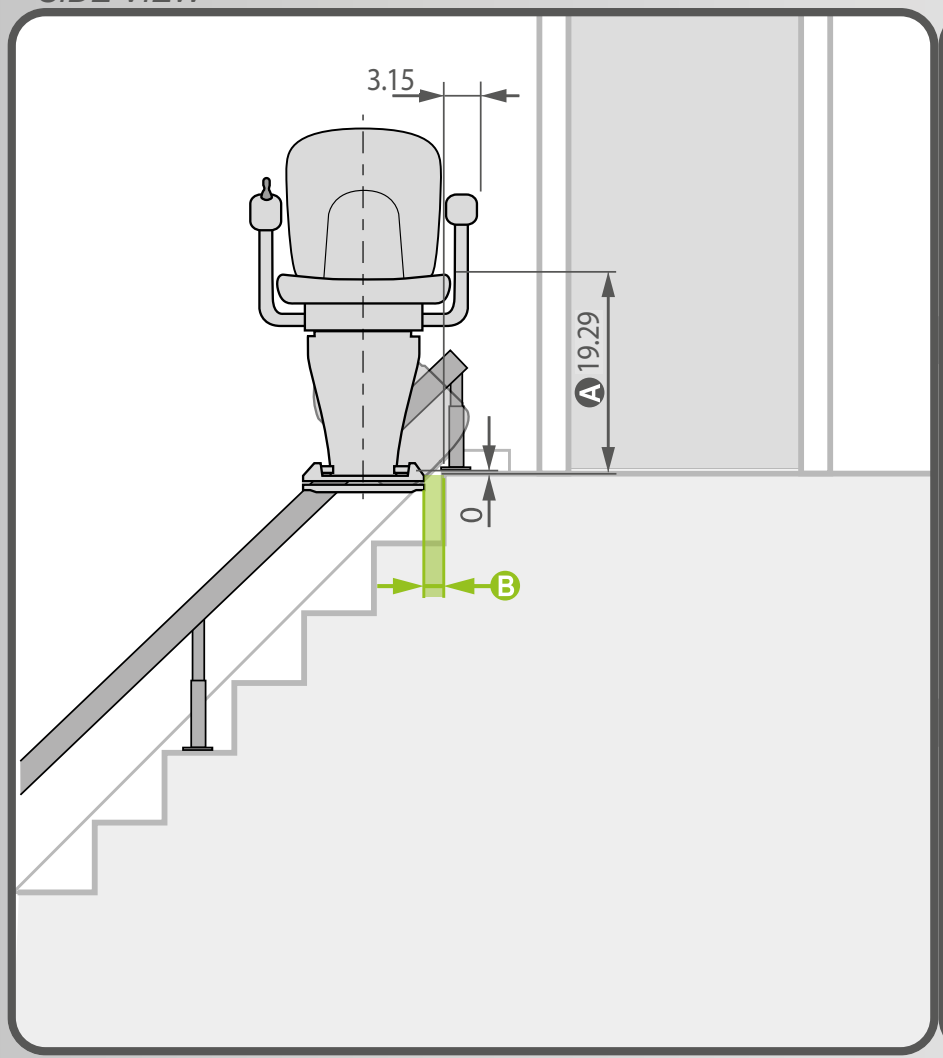

TOP VIEW

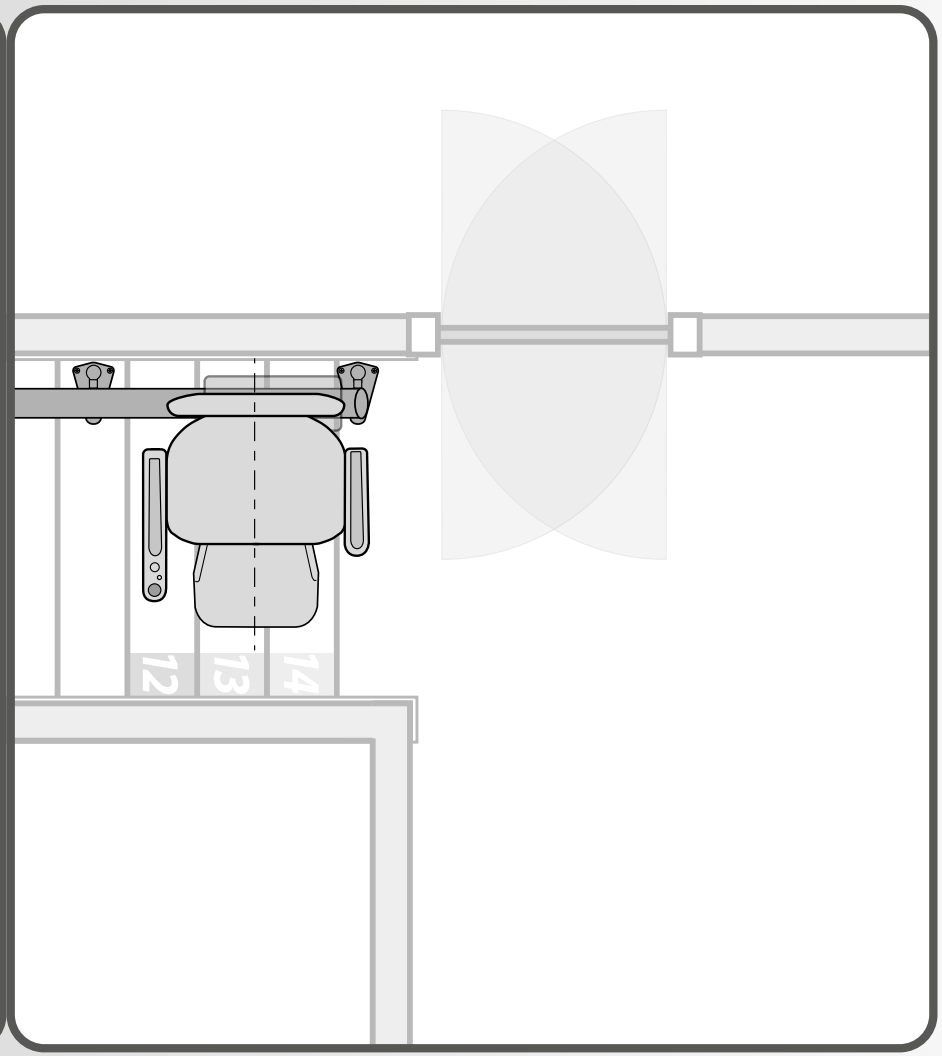

Ⓐ **Elegance/Alliance:** 19.29 inch
Classic: 18.70 inch
Measures are for footrestlevel, might differ dependant on rail angle and length of overrun.

Ⓑ Because of gap between footrest and top floor feasibility is required.

handicare

REMBRANDT_*min. 7.87 inch*

SIDE VIEW

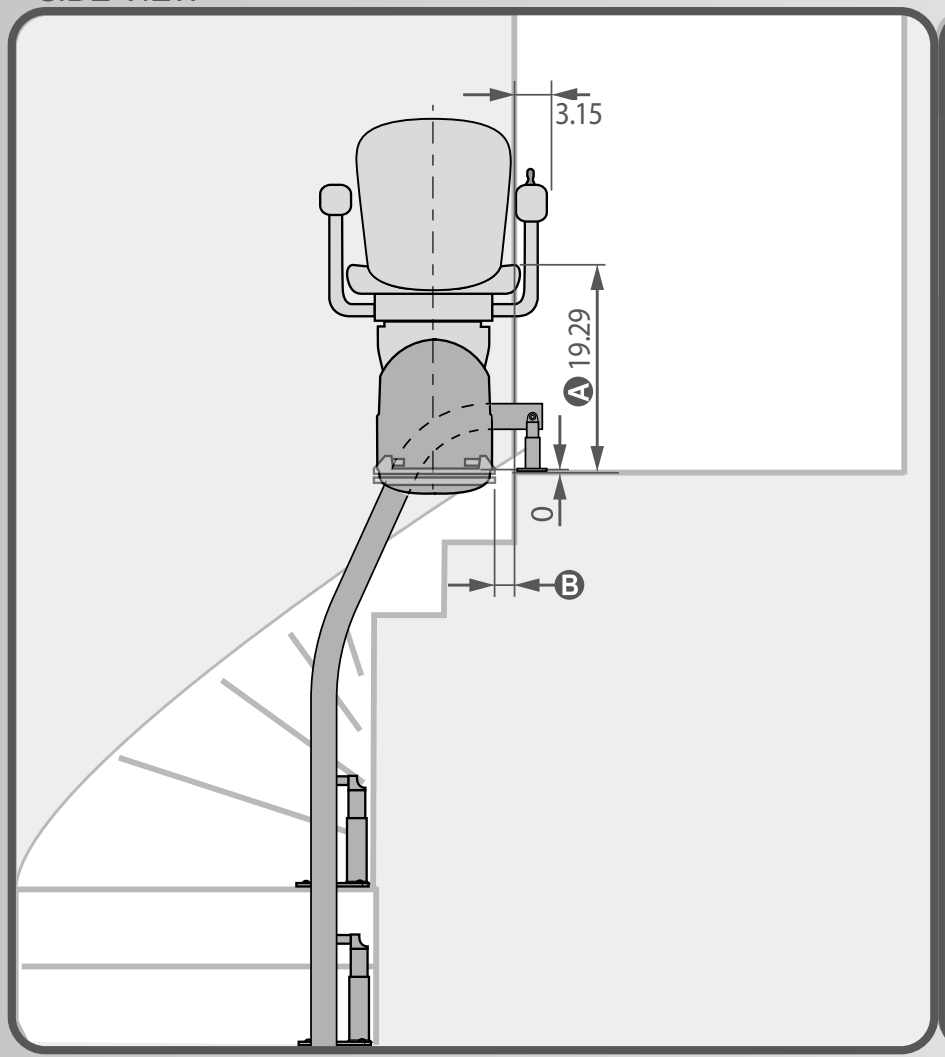

TOP VIEW

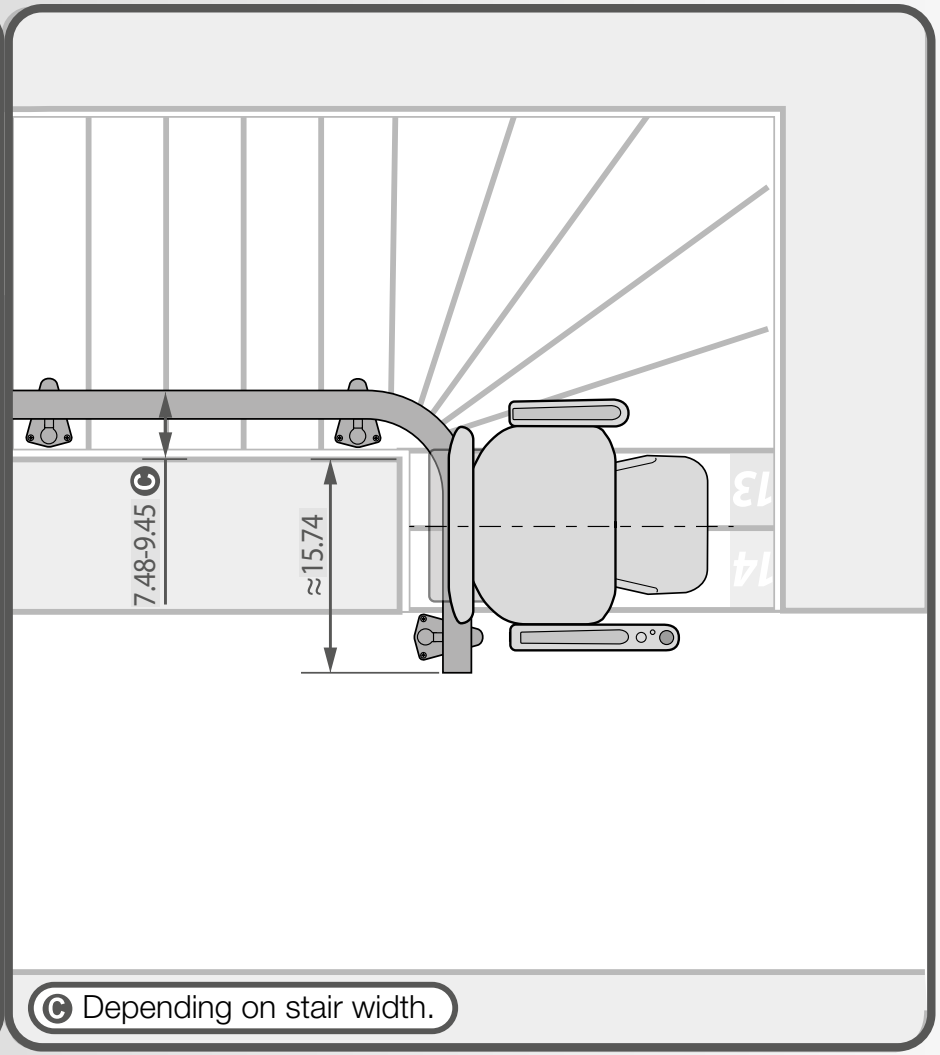

C Depending on stair width.

A **Elegance/Alliance:** 19.09 inch
Classic: 18.50 inch
Measures are for footrestlevel, might differ dependant on rail angle and length of overrun.

B Because of gap between footrest and top floor feasibility is required.
7.87 inch

REMBRANDT_*max. 7.87 inch*

SIDE VIEW

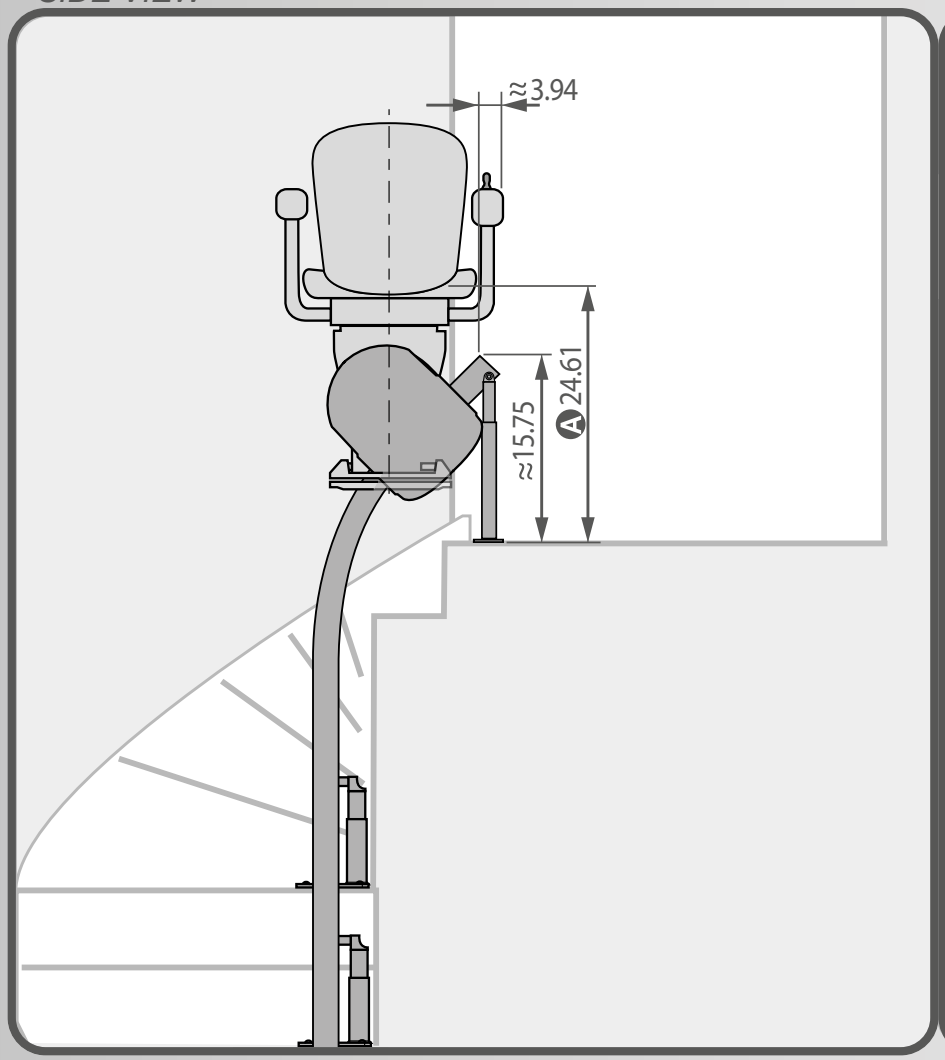

TOP VIEW

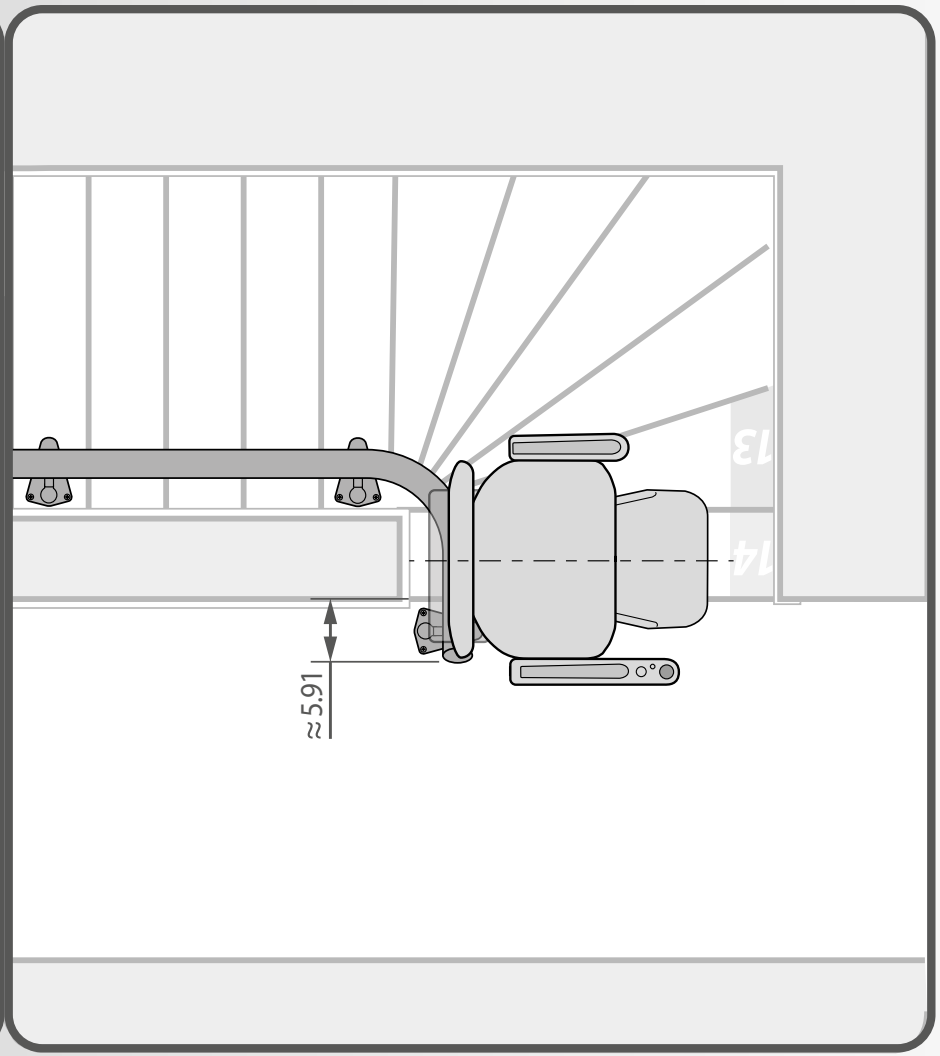

Ⓐ **Elegance/Alliance:** 24.61 inch
Classic: 24.02 inch
Measures dependant on rail angle and length of overrun.

90º PARK INSIDE

SIDE VIEW

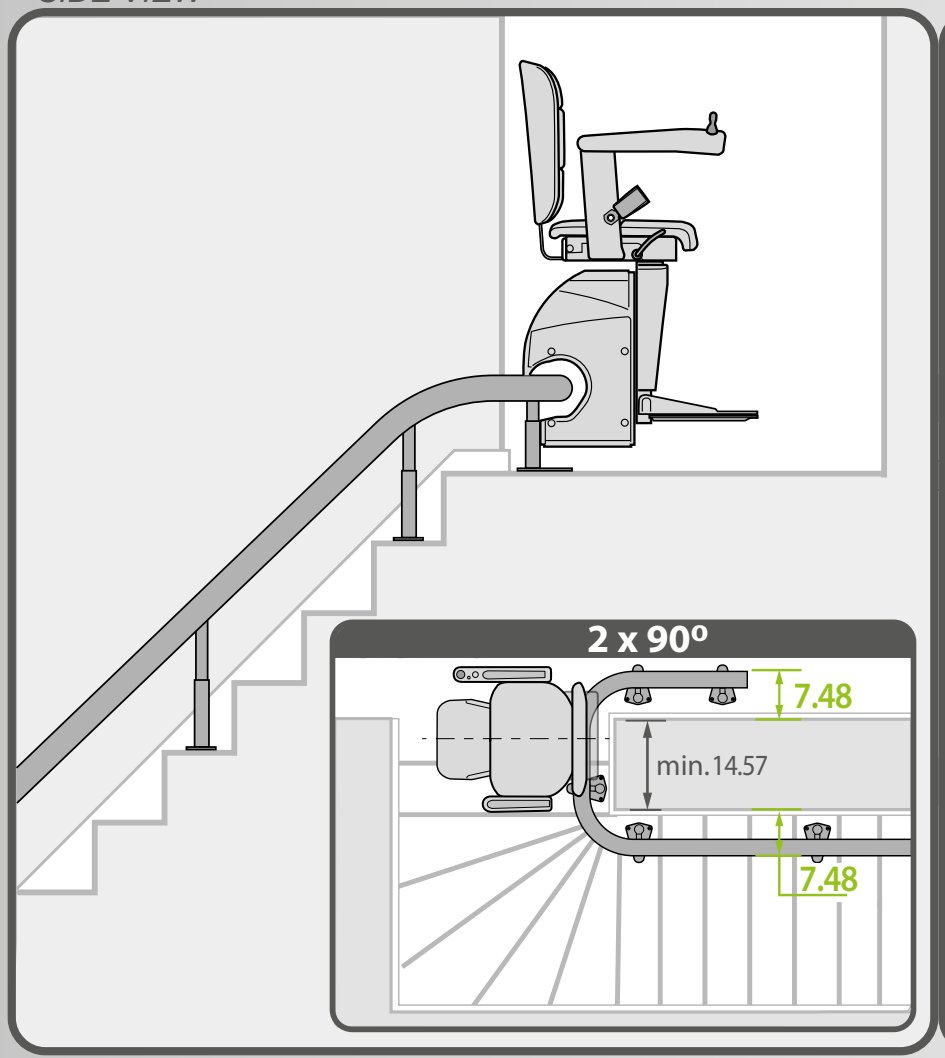

TOP VIEW

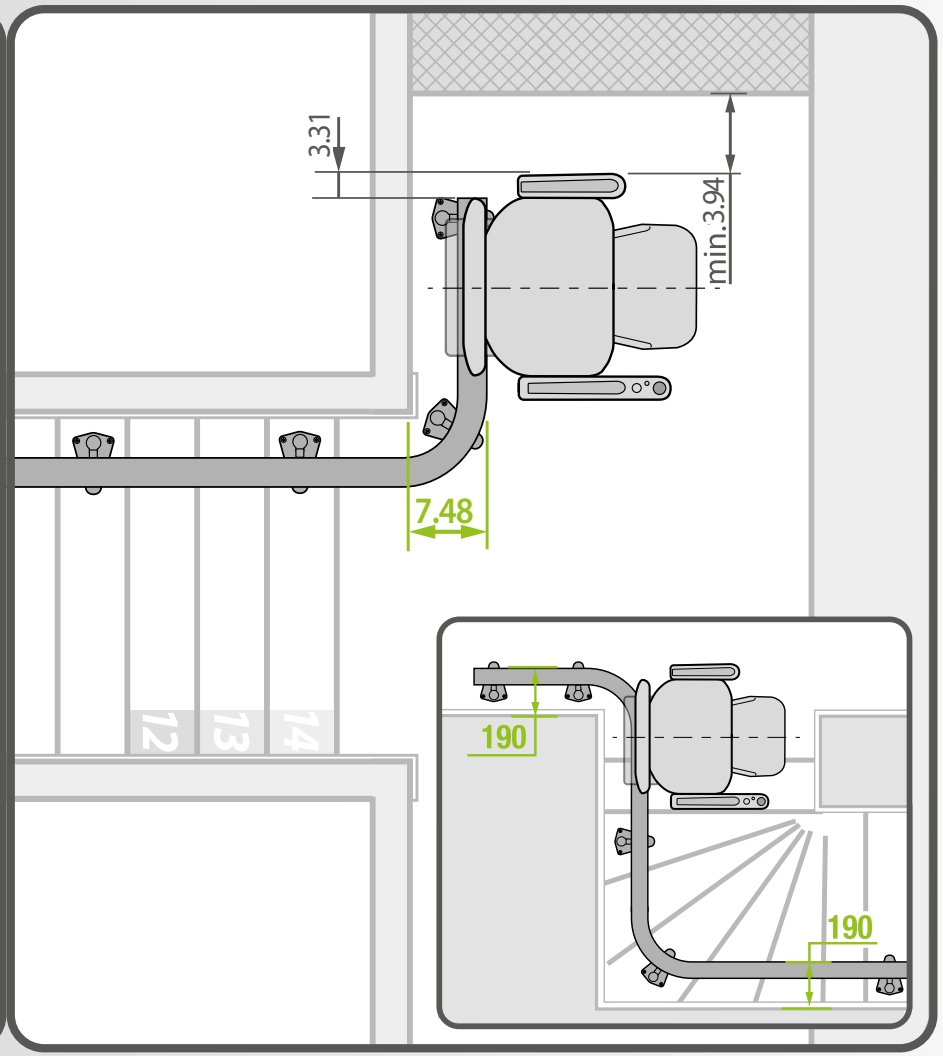

- Close to the wall in parking position
- More space for other stair users (children, partner, caretaker etc)

handicare

180º PARK INSIDE

SIDE VIEW

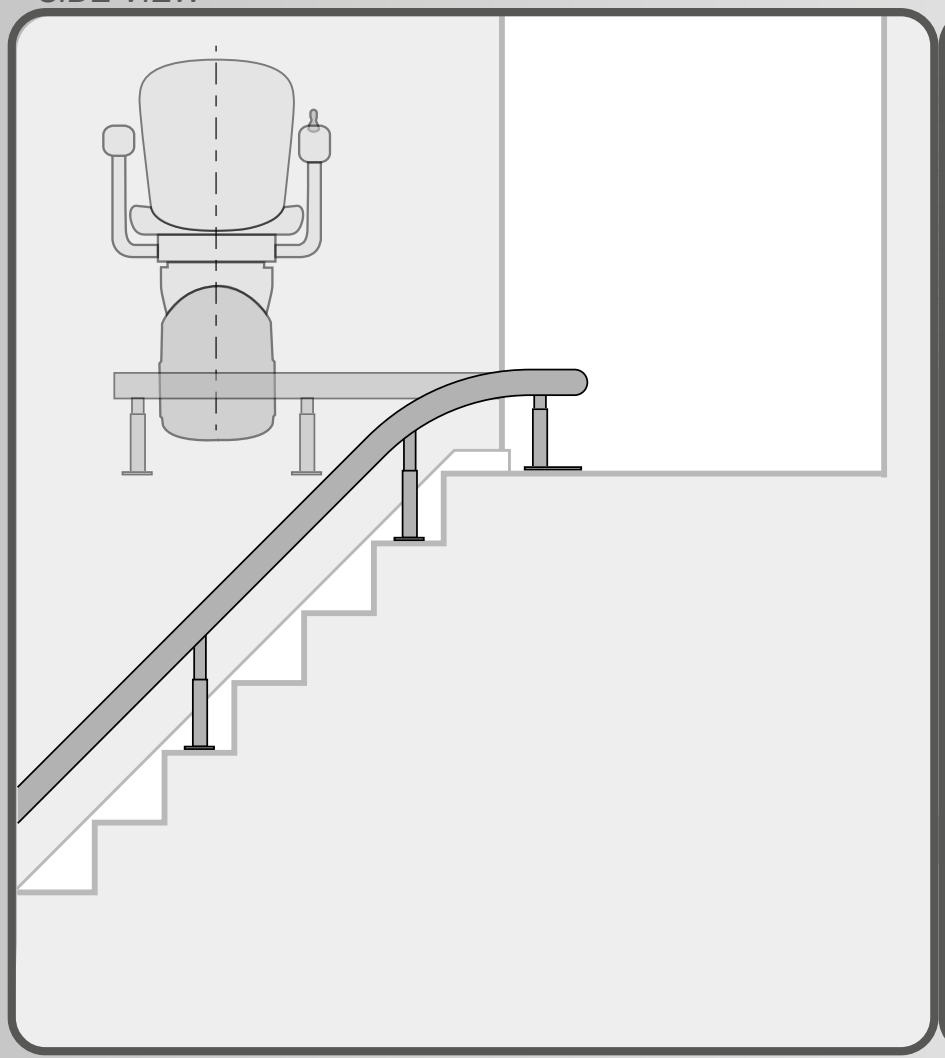

TOP VIEW

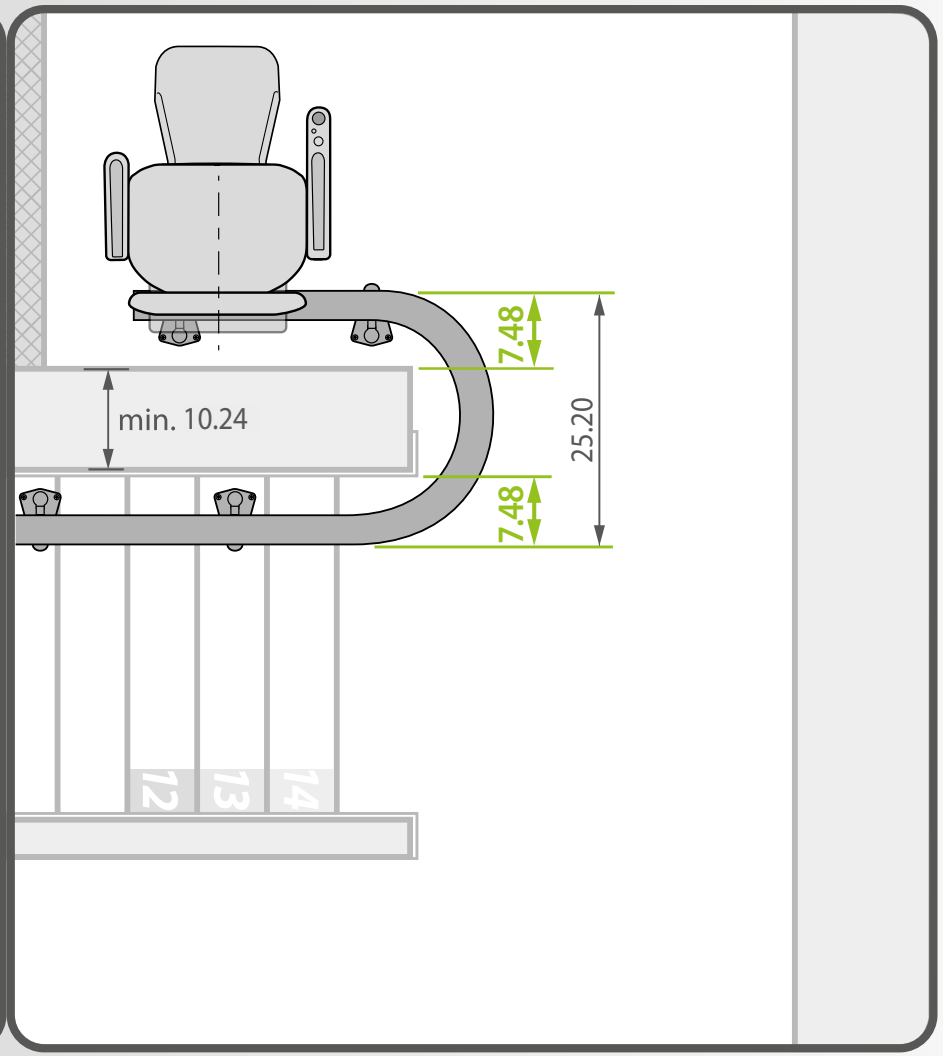

- Close to the wall in parking position
- The distance from outside rail to outside rail will be 25.20 inch.
- More space for other stairuser (children, partner, caretaker etc)



Faults&Tips

RAIL OVER STRINGER

SIDE VIEW

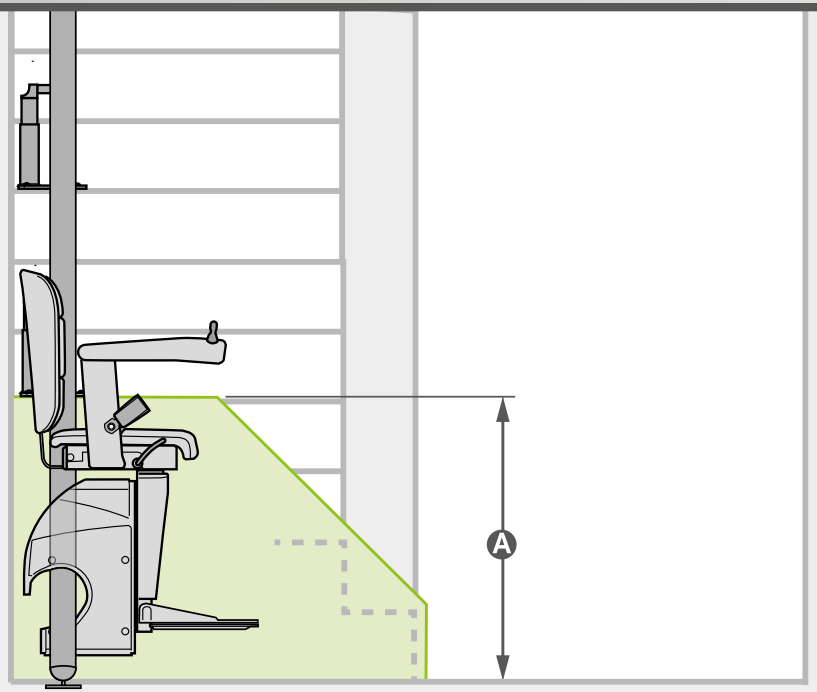

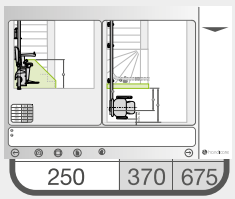

TOP VIEW

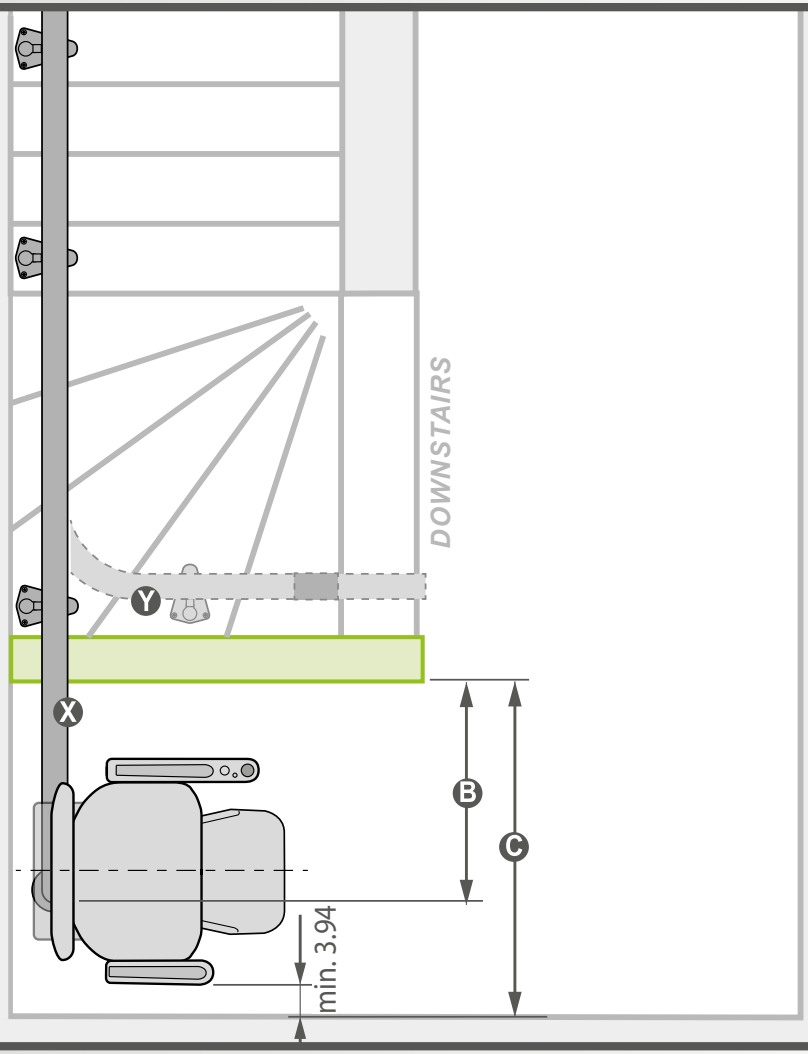

X Cheaper solution; no extra costs for rail option.

Y Hinged rail; more expensive solution.

TIPS

OVER STRINGER
LANDING 1st STEP
DOOR PAR_*down1*
DOOR PAR_*down2*
DOOR PAR_*up1*
DOOR PAR_*up2*
DOOR PAR_*up3*

handicare

LANDING FIRST STEP

SIDE VIEW

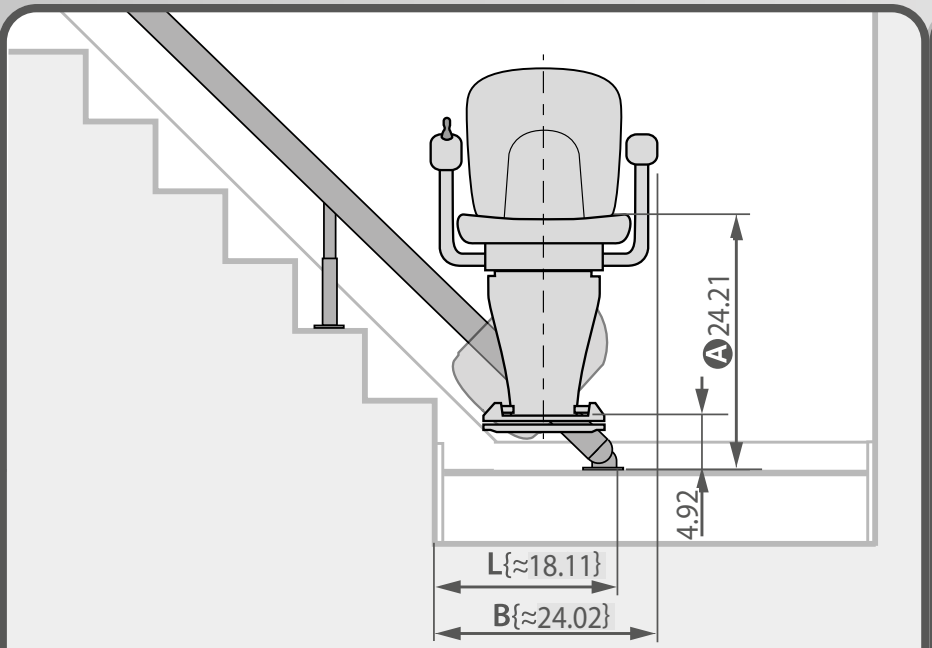

TOP VIEW

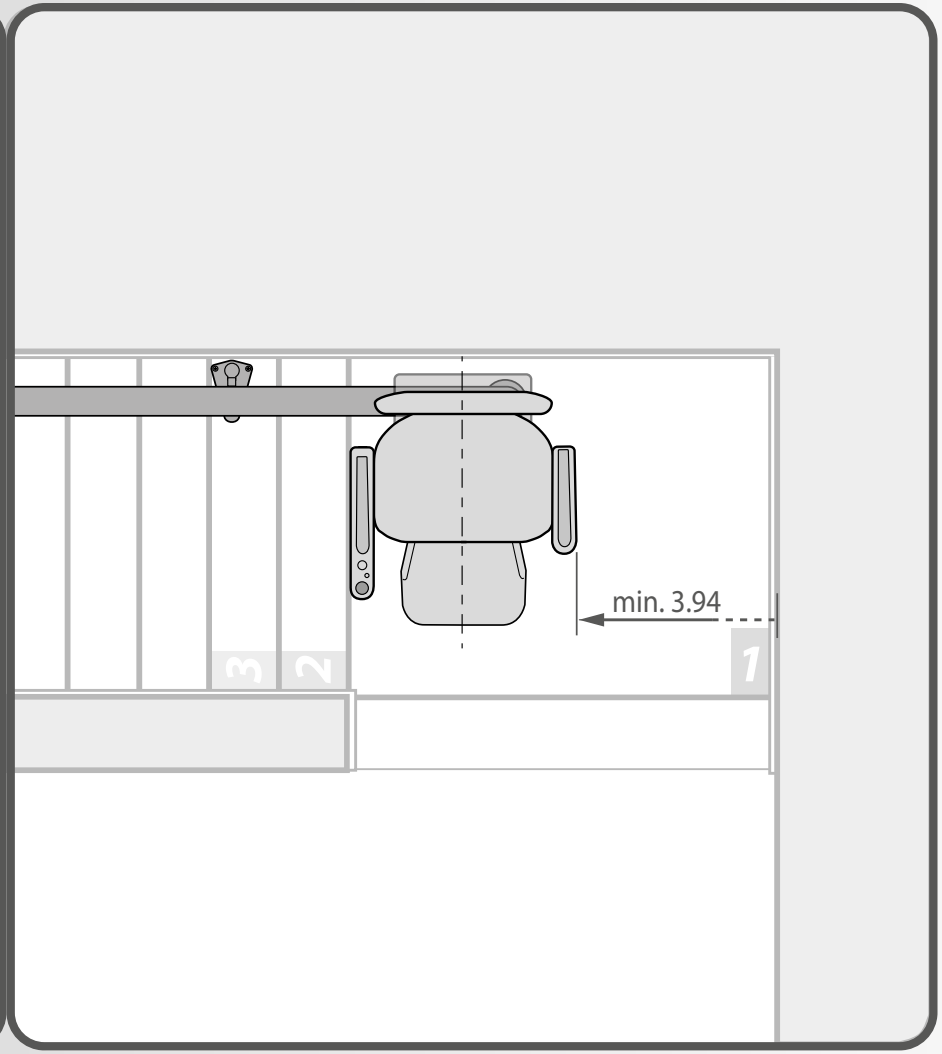

Ⓐ **Elegance:** 24.21 inch
Alliance: 24.21 inch
Classic: 23.62 inch

DOOR PARALLEL TO STAIRS_*downstairs, insufficient space*

SIDE VIEW

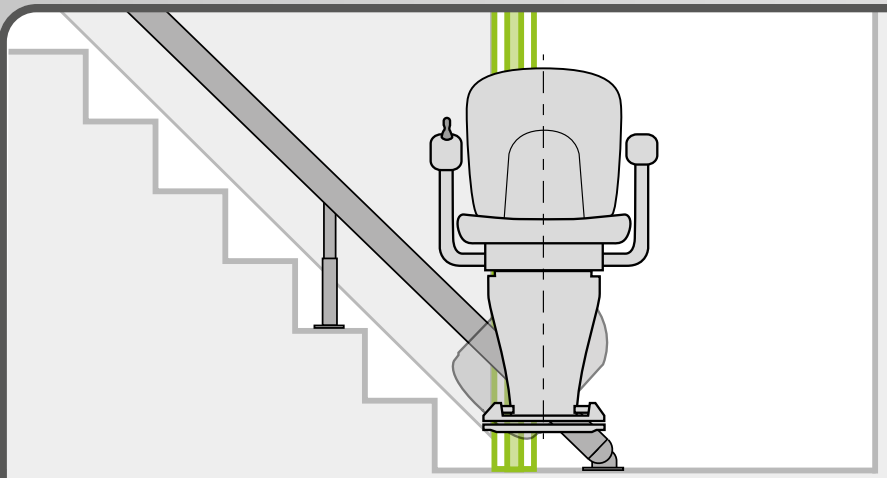

TOP VIEW

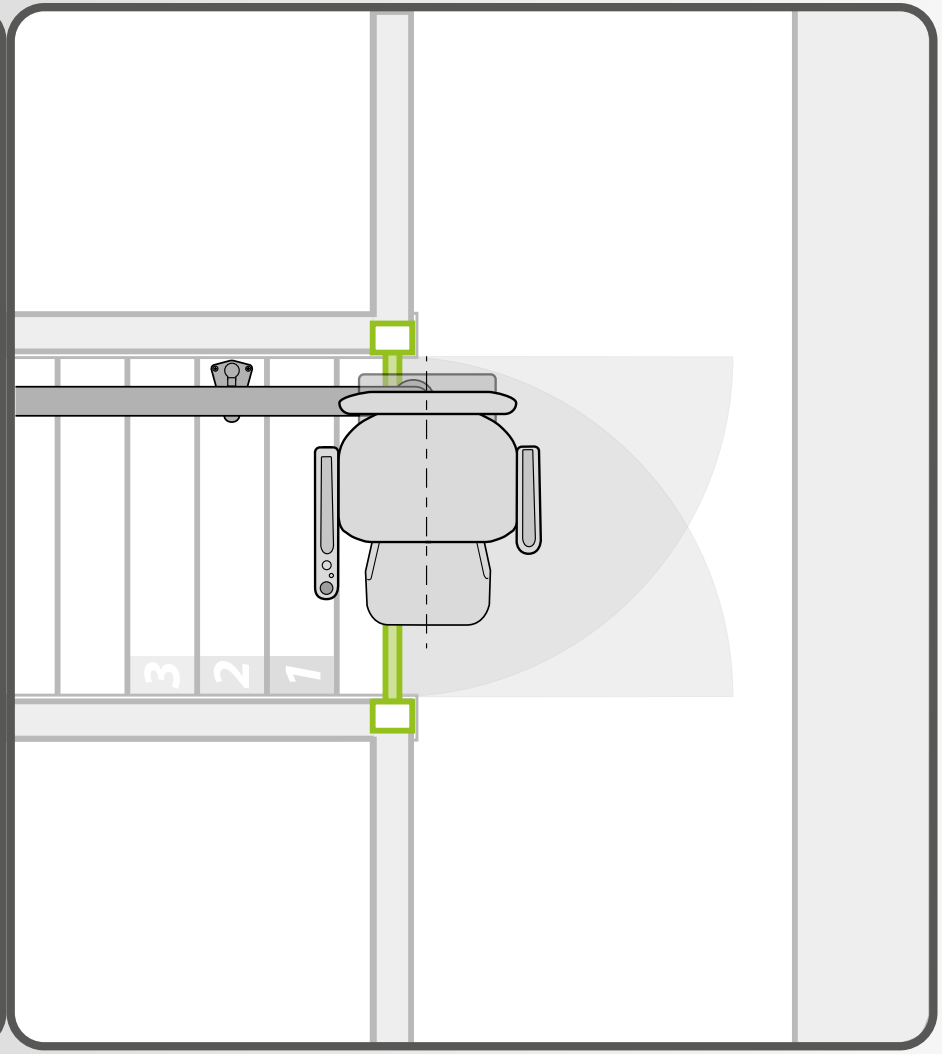

Remove door and modify doorframe. Extra charge/stoppoint to be advised.

TIPS

OVER STRINGER

LANDING 1st STEP

DOOR PAR_*down1*

DOOR PAR_*down2*

DOOR PAR_*up1*

DOOR PAR_*up2*

DOOR PAR_*up3*

DOOR PARALLEL TO STAIRS_*downstairs, door not removed*

SIDE VIEW

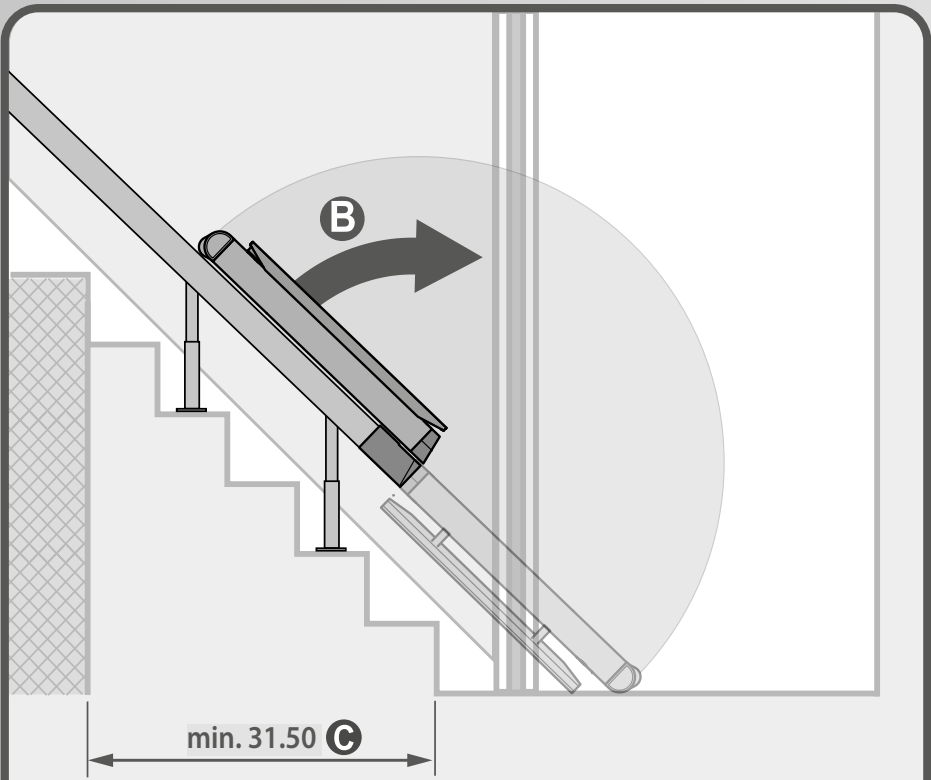

TOP VIEW

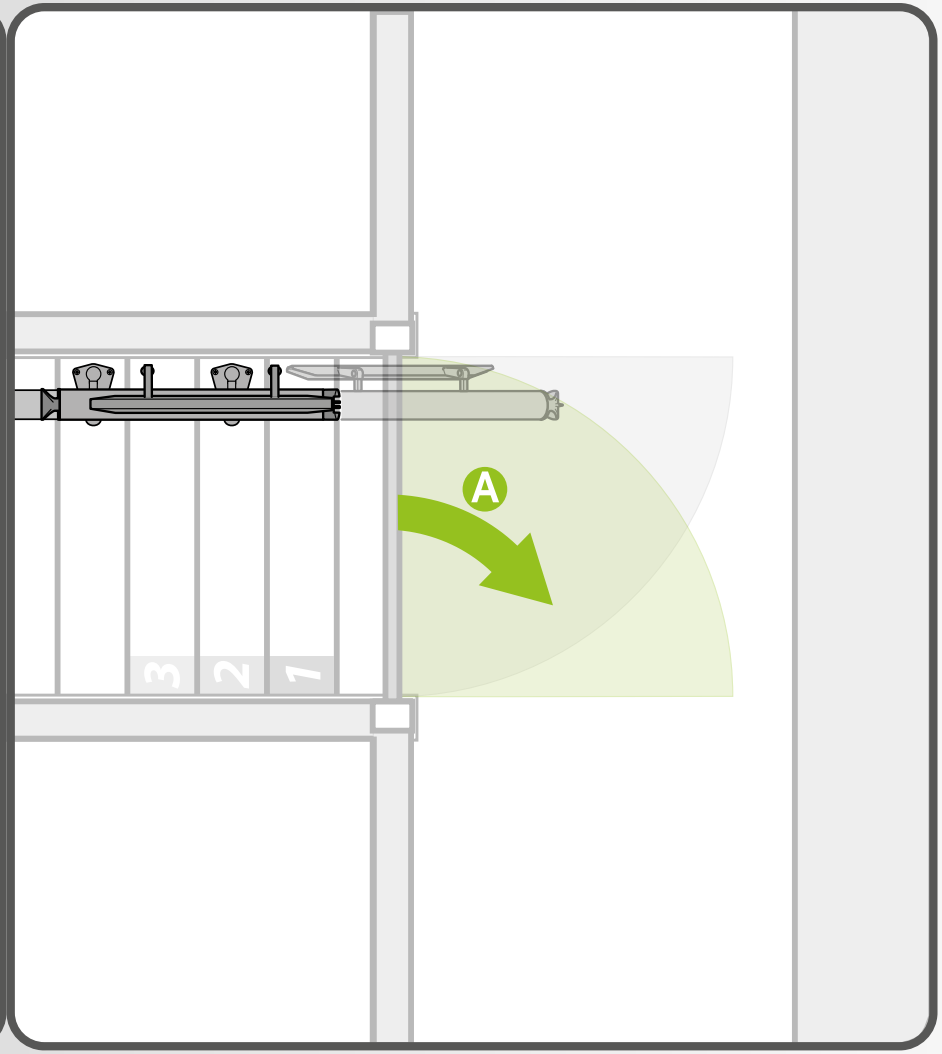

Only in combination with an automatic door opener (third party).
C Necessary horizontal length first wall is minimum 31.50 inch.

TIPS

OVER STRINGER
LANDING 1st STEP
DOOR PAR_*down1*
DOOR PAR_*down2*
DOOR PAR_*up1*
DOOR PAR_*up2*
DOOR PAR_*up3*

DOOR PARALLEL TO STAIRS_*upstairs, insufficient space*

SIDE VIEW

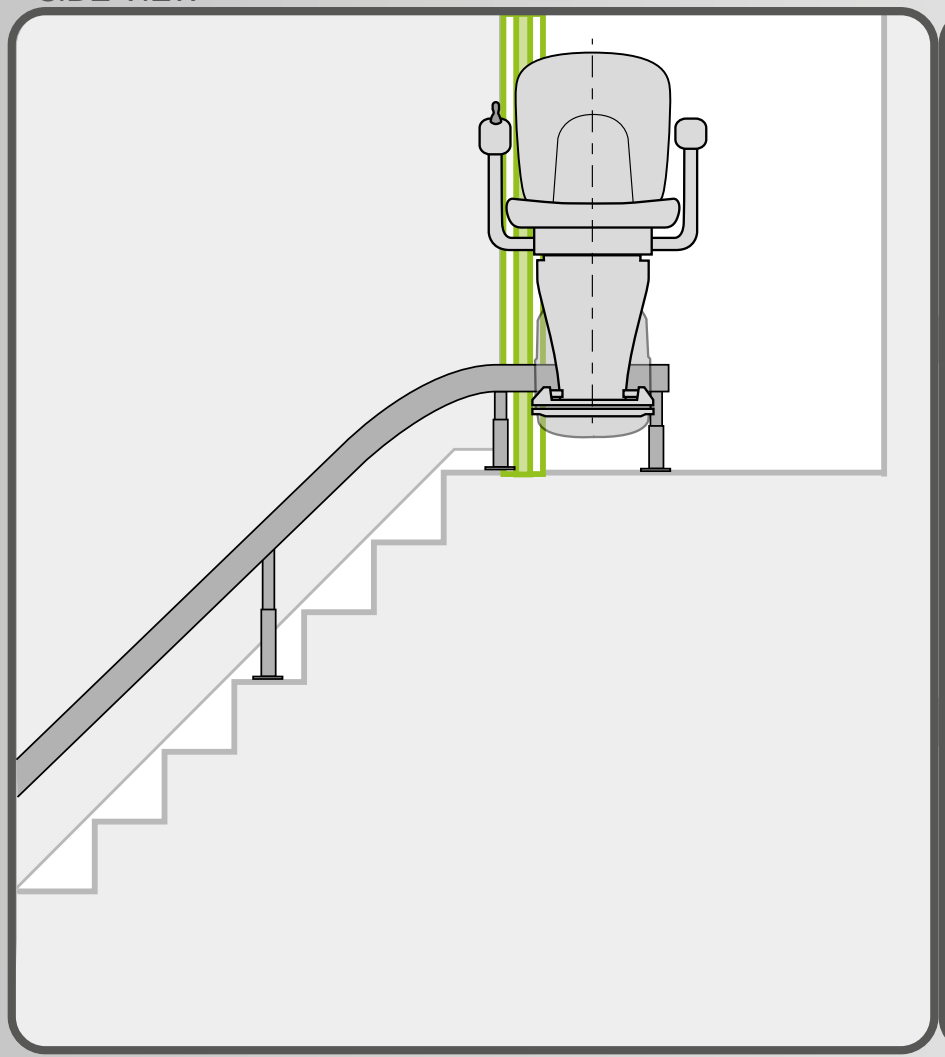

TOP VIEW

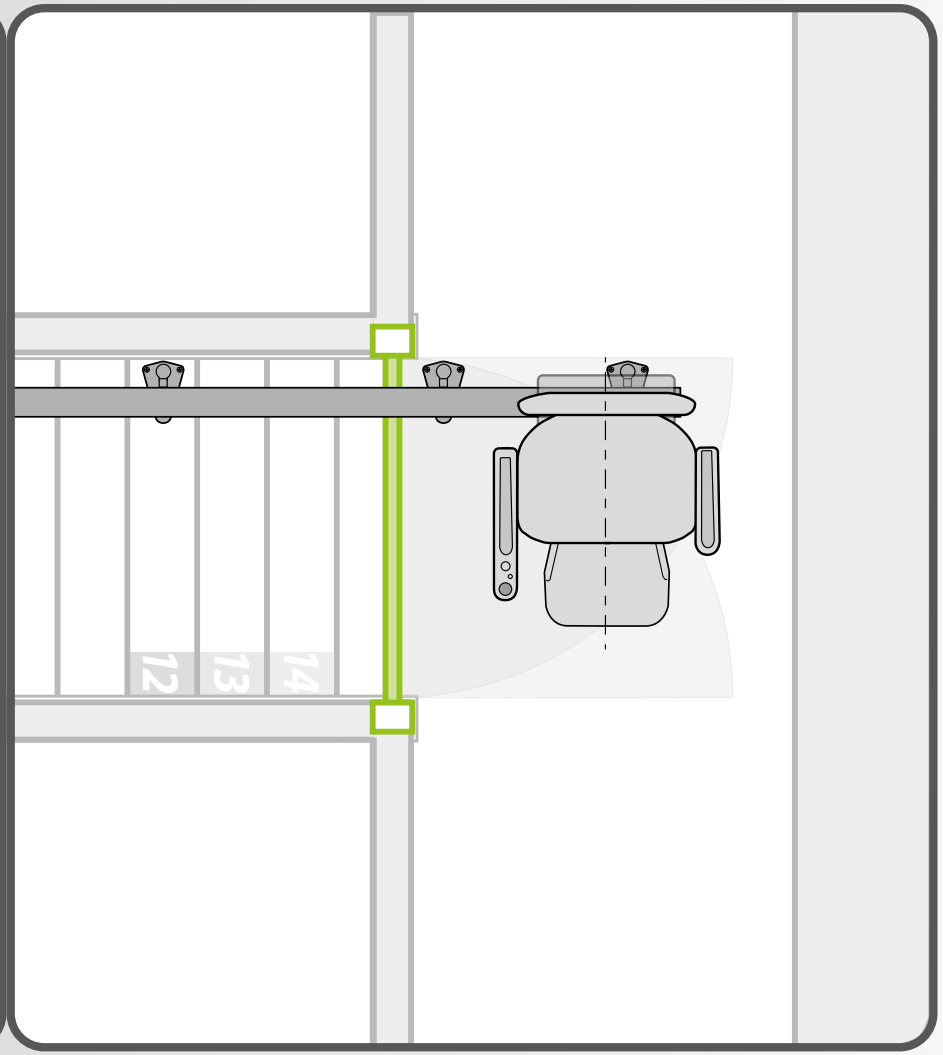

Remove door and modify doorframe.

DOOR PARALLEL TO STAIRS_*upstairs, door not removed*

SIDE VIEW

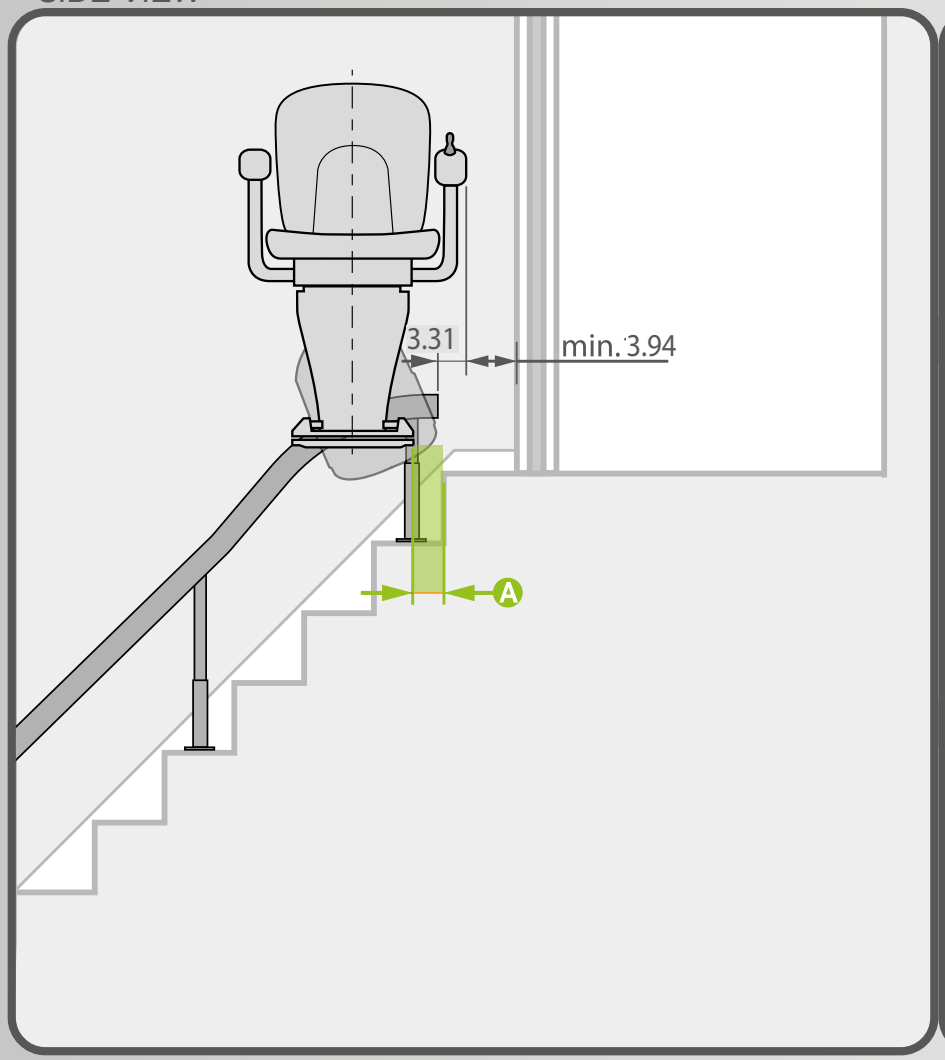

TOP VIEW

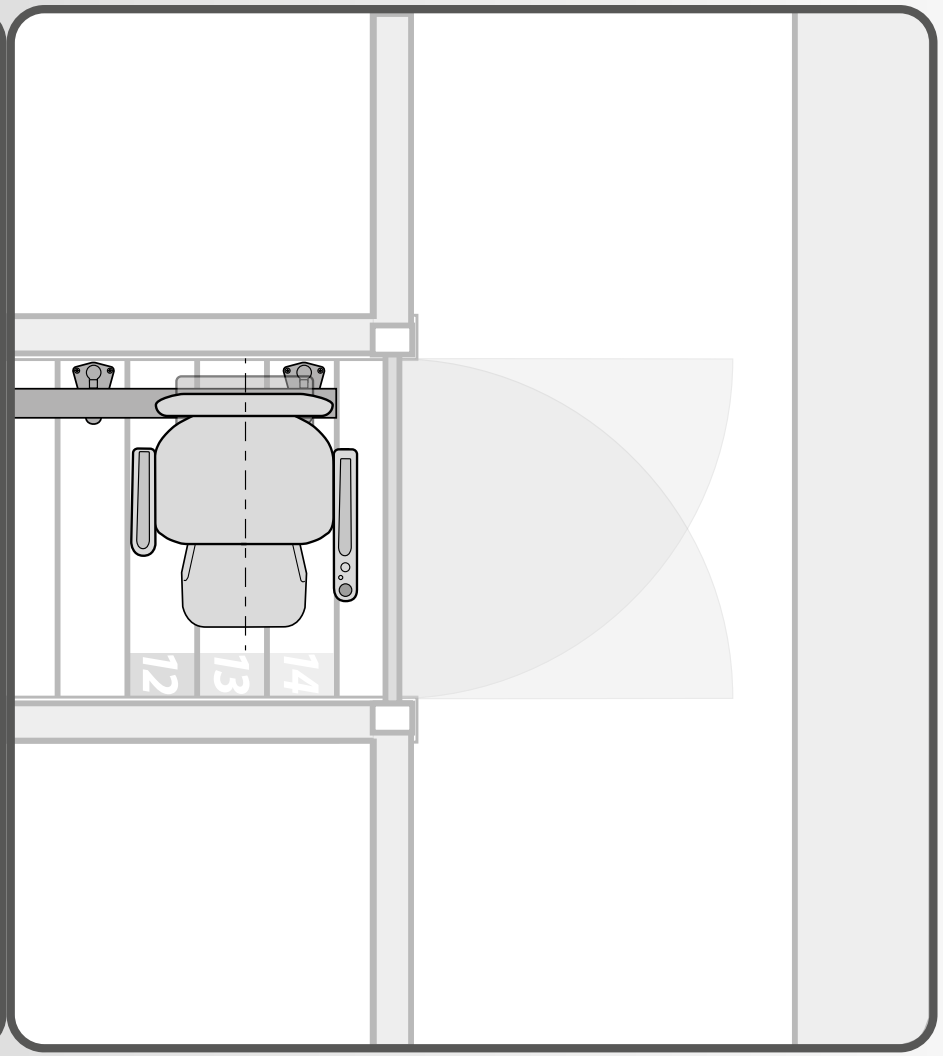

Ⓐ There will be a gap between footrest en step.

DOOR PARALLEL TO STAIRS_*upstairs, door opener*

SIDE VIEW

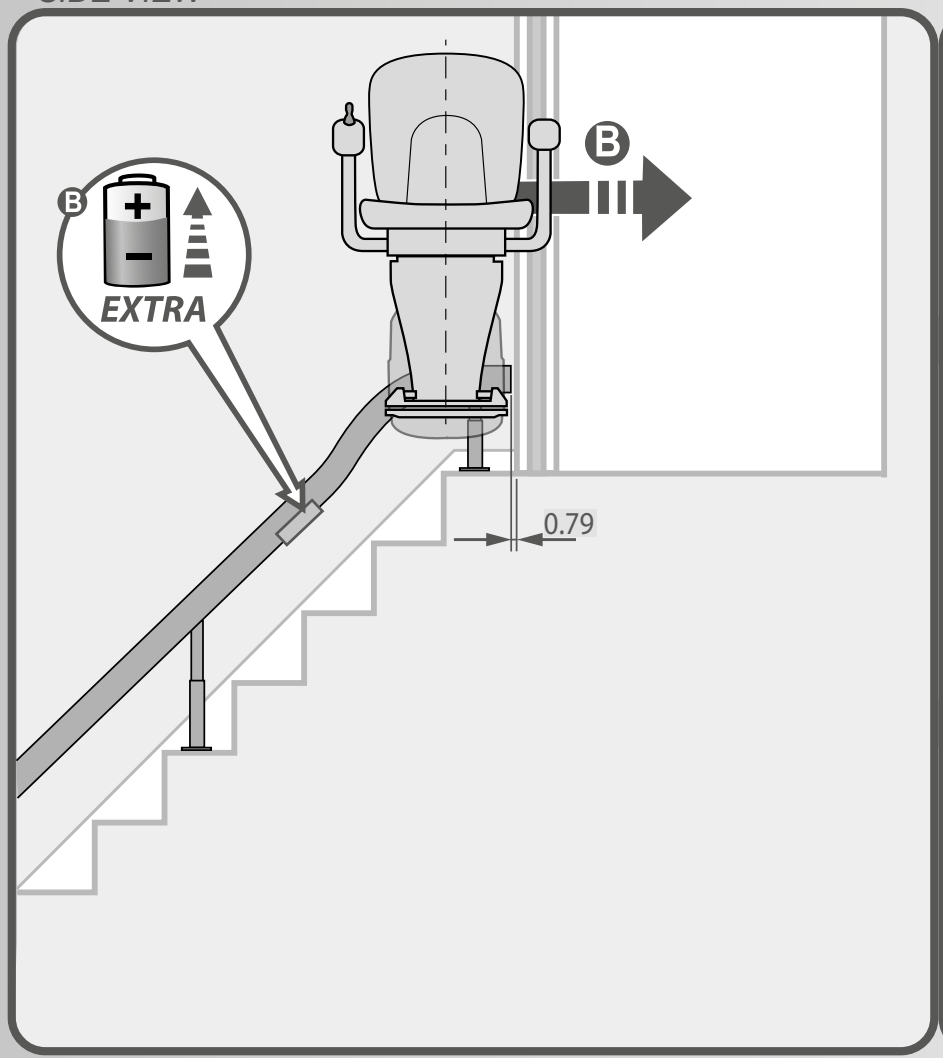

TOP VIEW

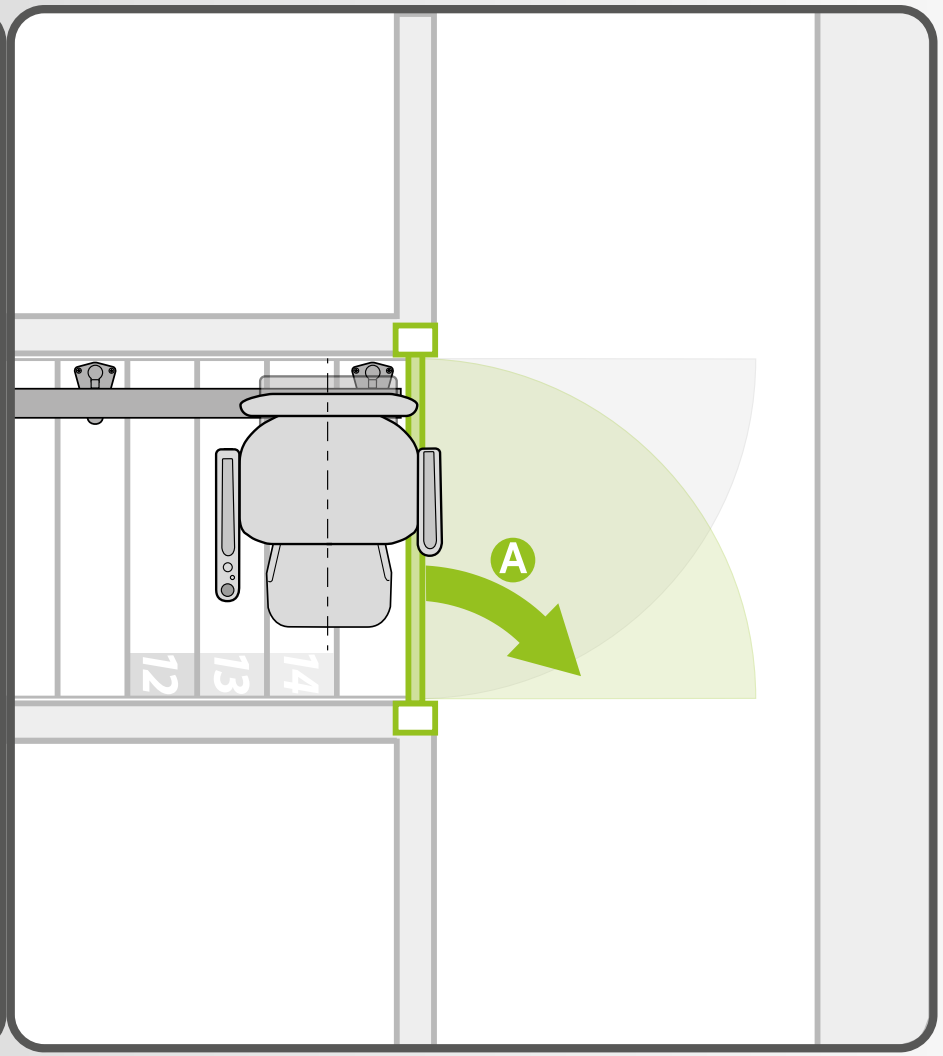

An extra charge station{Ⓑ} can be advised to park the lift.
In combination with an automatic door opener (third party).

TIPS

OVER STRINGER

LANDING 1st STEP

DOOR PAR_*down1*

DOOR PAR_*down2*

DOOR PAR_*up1*

DOOR PAR_*up2*

DOOR PAR_*up3*



Attachments

FIXATION RAIL_*curved stairs, posibility 1*

3D-VIEW

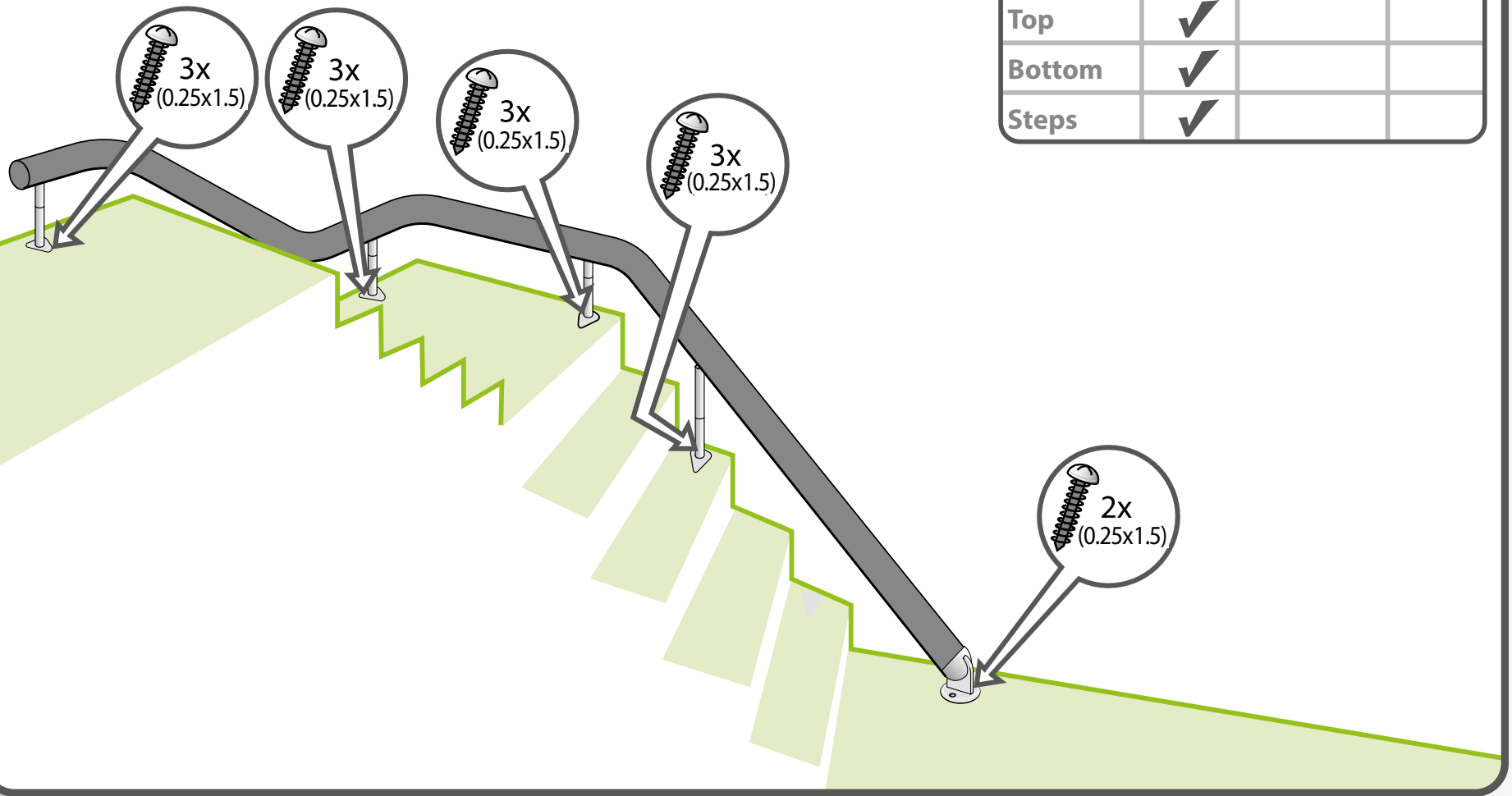

	Screws	Wallbrackets	Glue
Top	✓		
Bottom	✓		
Steps	✓		

FIXATION RAIL_*curved stairs, posibility 2*

3D-VIEW

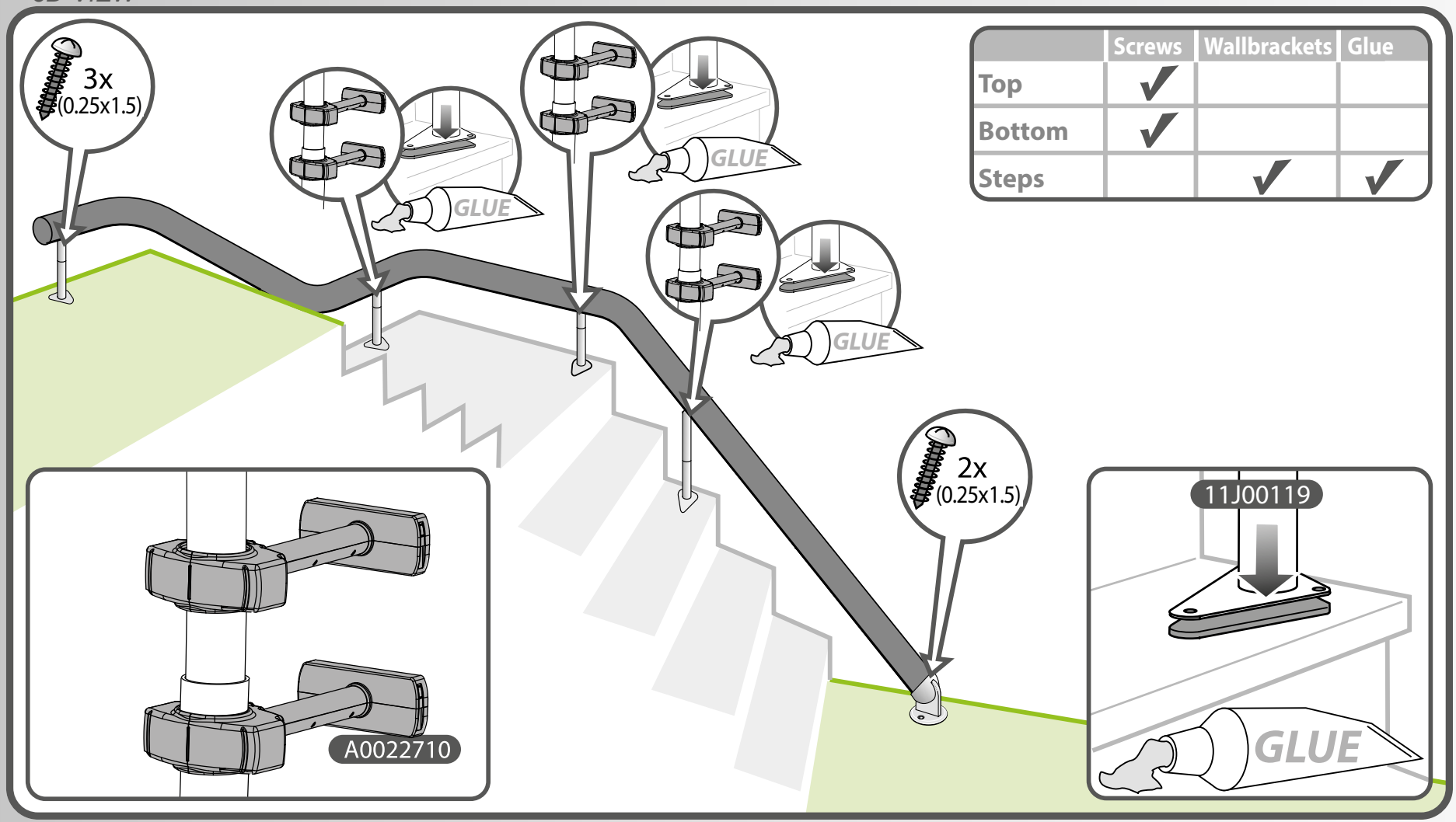

	Screws	Wallbrackets	Glue
Top	✓		
Bottom	✓		
Steps		✓	✓

When using wall brackets the wall shall be of solid material e.g. not a gypse/dry wall.
The wall shall be minimum half brick. Bricks shall not be hollow.

FIXATION RAIL_*curved stairs, posibility 3*

3D-VIEW

	Screws	Wallbrackets	Glue
Top	✓		
Bottom			✓
Steps	✓		

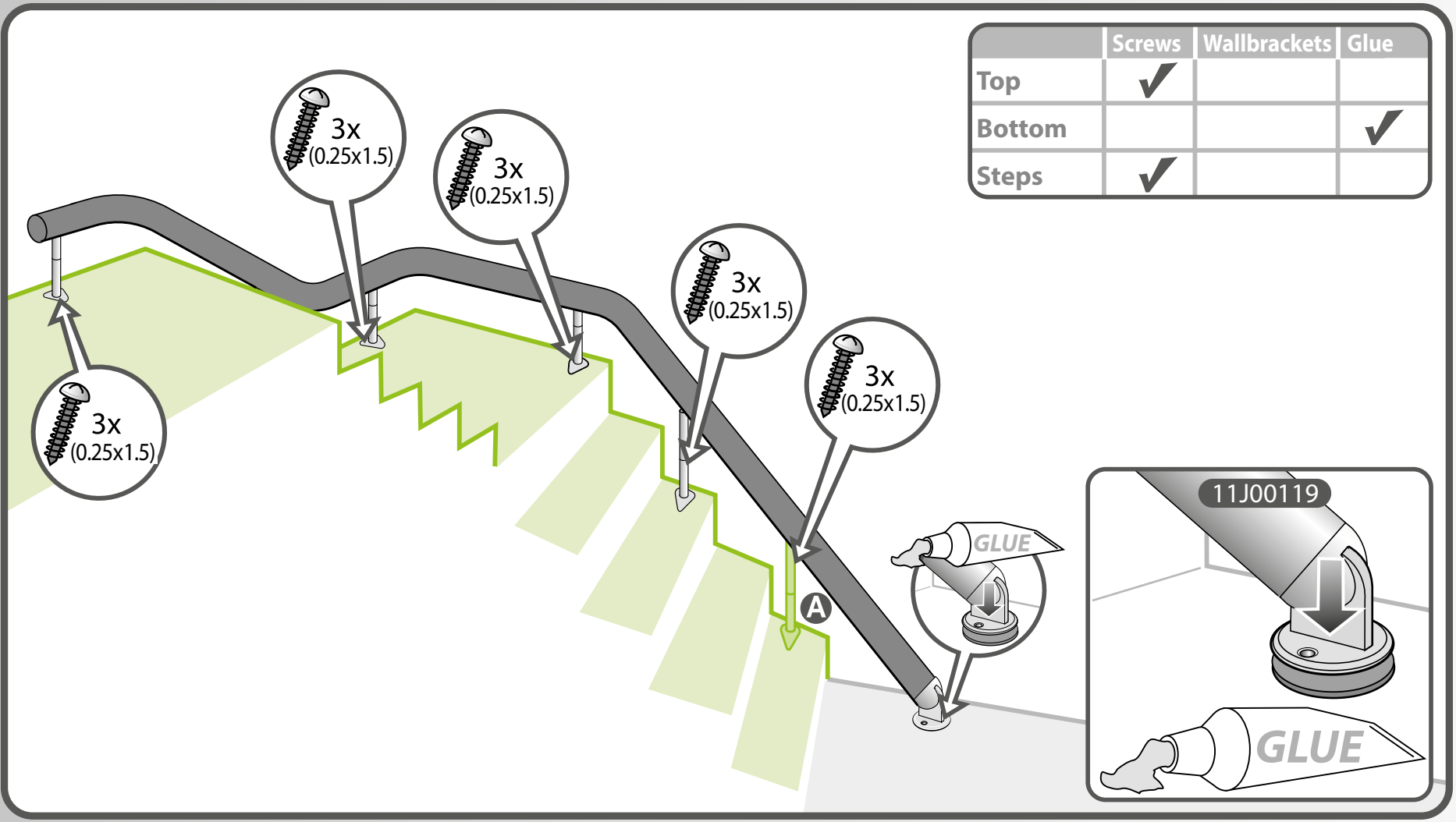

A Support on the first step.

FIXATION RAIL_*curved stairs, posibility 4*

3D-VIEW

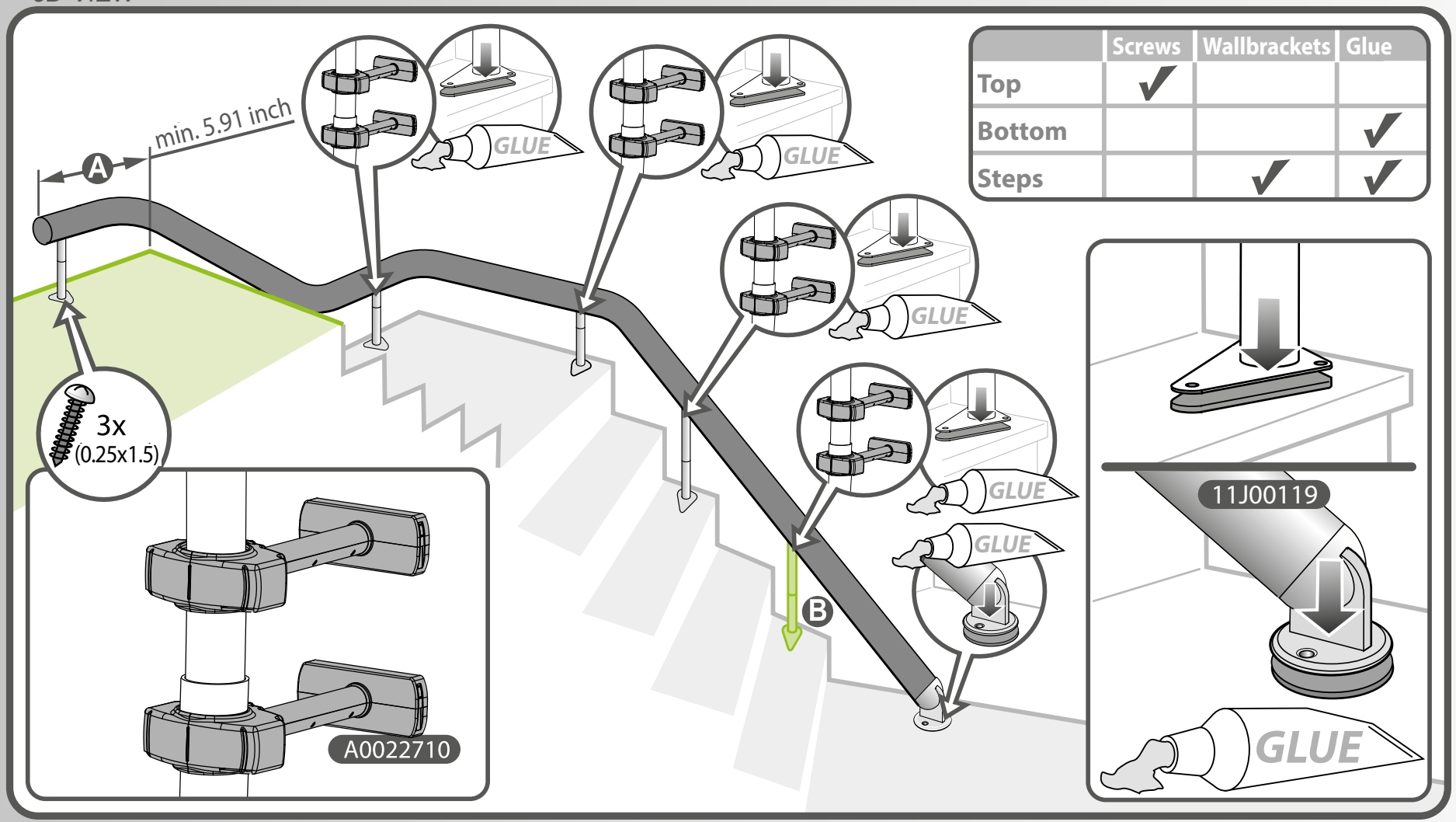

	Screws	Wallbrackets	Glue
Top	✓		
Bottom			✓
Steps		✓	✓

Ⓐ Min. rail length upstairs: 5.91 inch.
Ⓑ Support on the first step.
When using wall brackets the wall shall be of solid material e.g. not a gypse/dry wall.
The wall shall be minimum half brick. Bricks shall not be hollow.

FIXATION RAIL_*curved stairs, posibility 5*

3D-VIEW

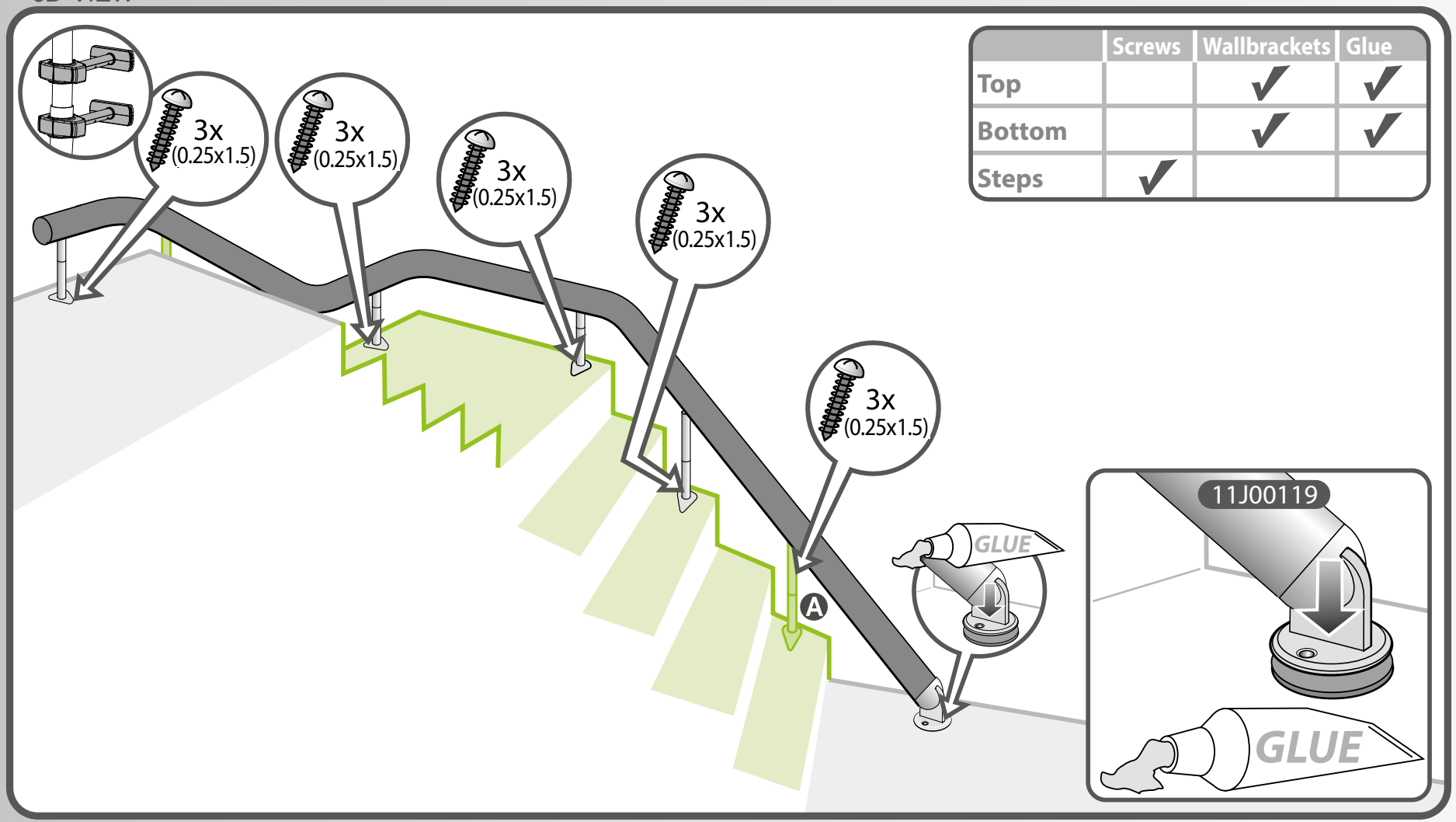

	Screws	Wallbrackets	Glue
Top		✓	✓
Bottom		✓	✓
Steps	✓		

A Support on the first step.
Support on the last step.
When using wall brackets the wall shall be of solid material e.g. not a gypse/dry wall.
The wall shall be minimum half brick. Bricks shall not be hollow.

FIXATION RAIL_*curved stairs, posibility 6*

3D-VIEW

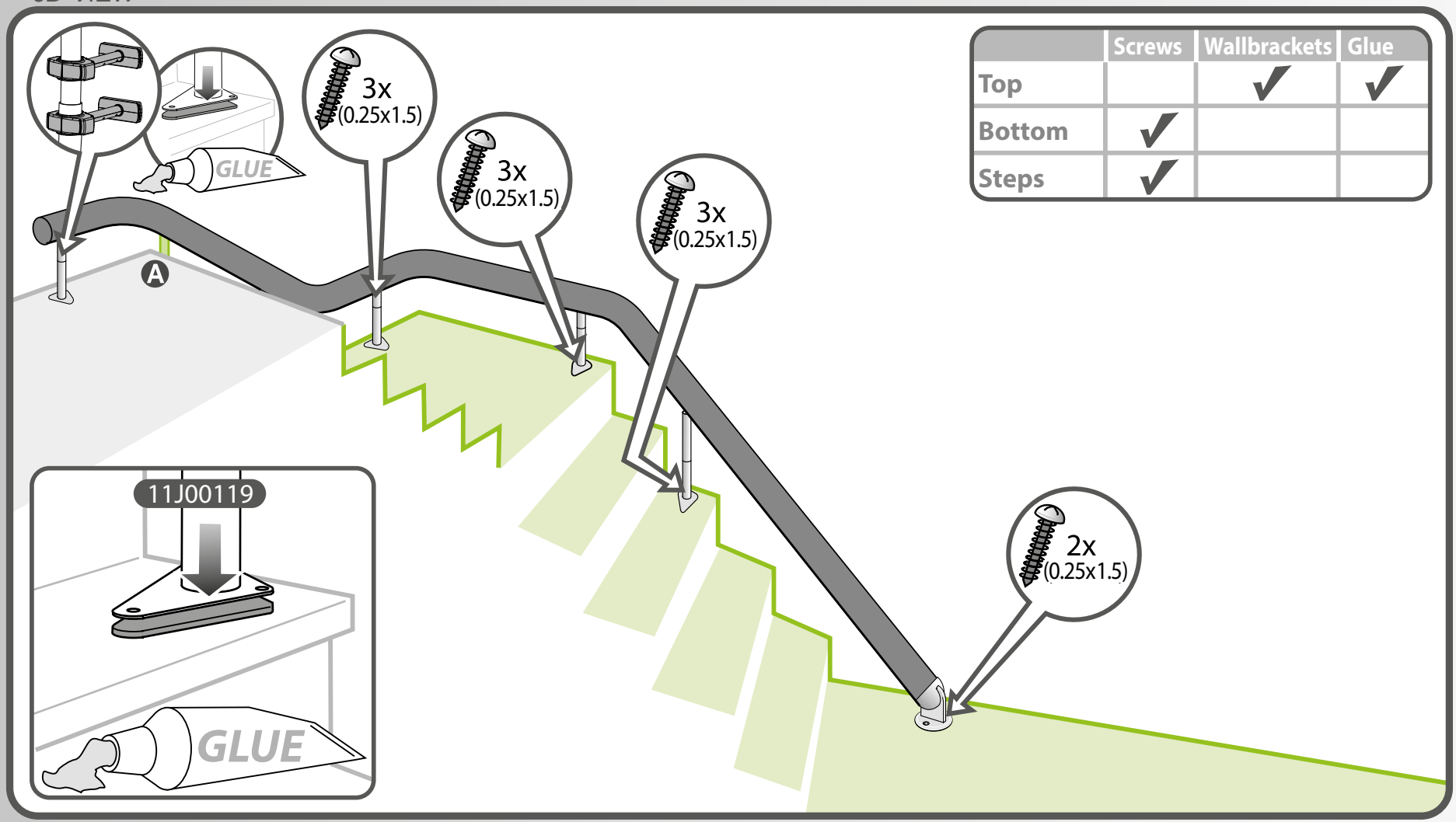

	Screws	Wallbrackets	Glue
Top		✓	✓
Bottom	✓		
Steps	✓		

A Support on the last step.
When using wall brackets the wall shall be of solid material e.g. not a gypse/dry wall.
The wall shall be minimum half brick. Bricks shall not be hollow.

FIXATION RAIL_*straight stairs: Parking curve upstairs and/or downstairs*

3D-VIEW

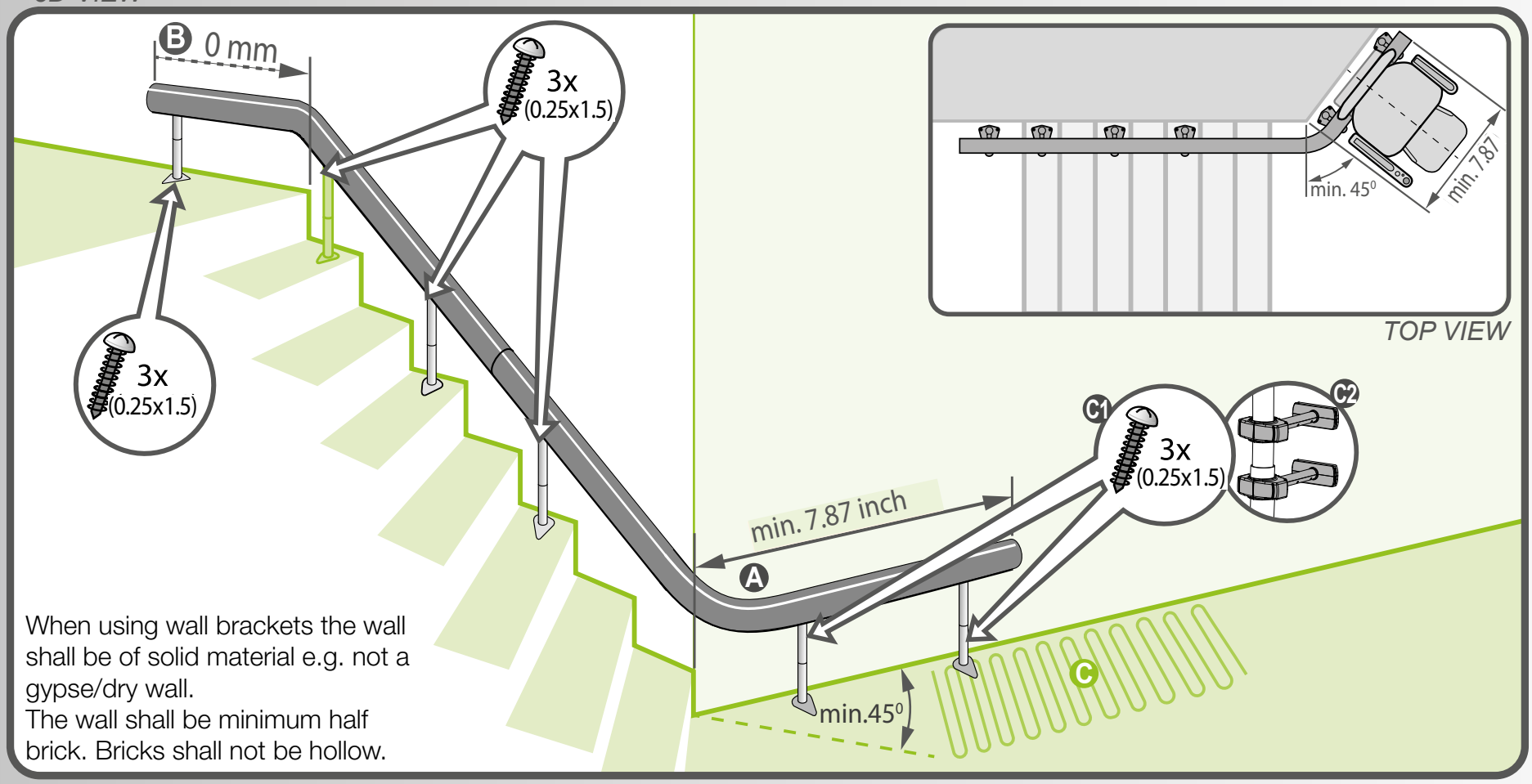

When using wall brackets the wall shall be of solid material e.g. not a gypse/dry wall.
The wall shall be minimum half brick. Bricks shall not be hollow.

A Parking curve exceeds 45° -) 7.87 inch or more behind the wall (13,78 inch perpendicular to the rail centreline).
B Overrun can be lowered or 0 mm.
C Floor heating:
- Floor heating not present-) no wall brackets.
- Floor heating present-) attach all supports with wall brackets.

A lift is possible in this situation. Refer to the remaining pages for other situations.

FIXATION RAIL_*straight stairs: 400 mm or more upstairs overrun*

3D-VIEW

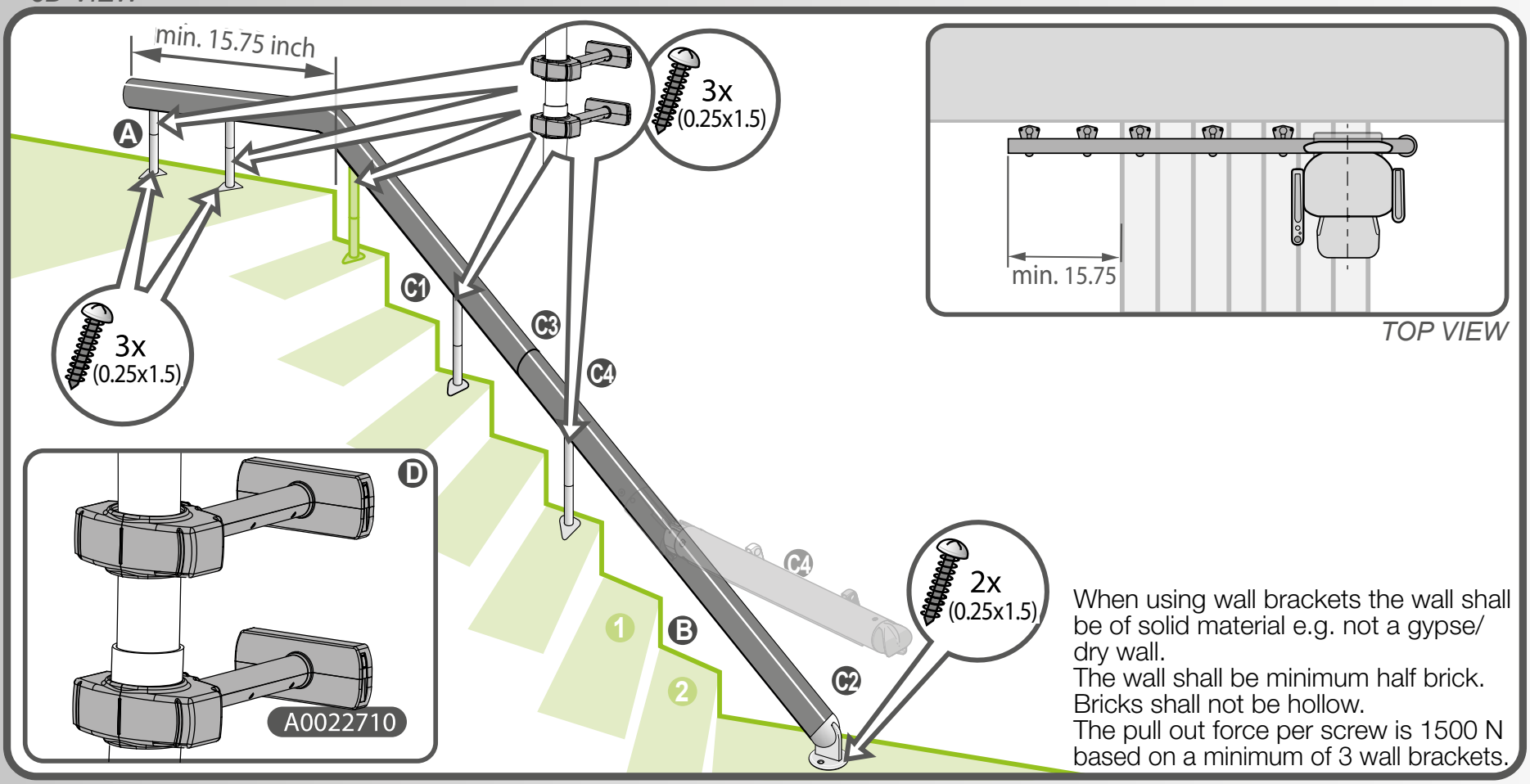

TOP VIEW

When using wall brackets the wall shall be of solid material e.g. not a gypse/ dry wall.
The wall shall be minimum half brick.
Bricks shall not be hollow.
The pull out force per screw is 1500 N based on a minimum of 3 wall brackets.

- **A** Two supports on upstairs floor.
- **B** Maximum of 2 steps without supports.
- **C** Wall brackets are mandatory.
  - Attach a minimum of 2 of the top 4 supports with wall brackets.
  - Drill and screw down the bottom foot.
  - If floor heating is present, attach all supports with wall brackets.
  - If a hinged rail is fitted, attach all supports with wall brackets.
- **D** Wall brackets are provided for all supports.

FIXATION RAIL_*straight stairs: less than 400 mm top rail overrun*

3D-VIEW

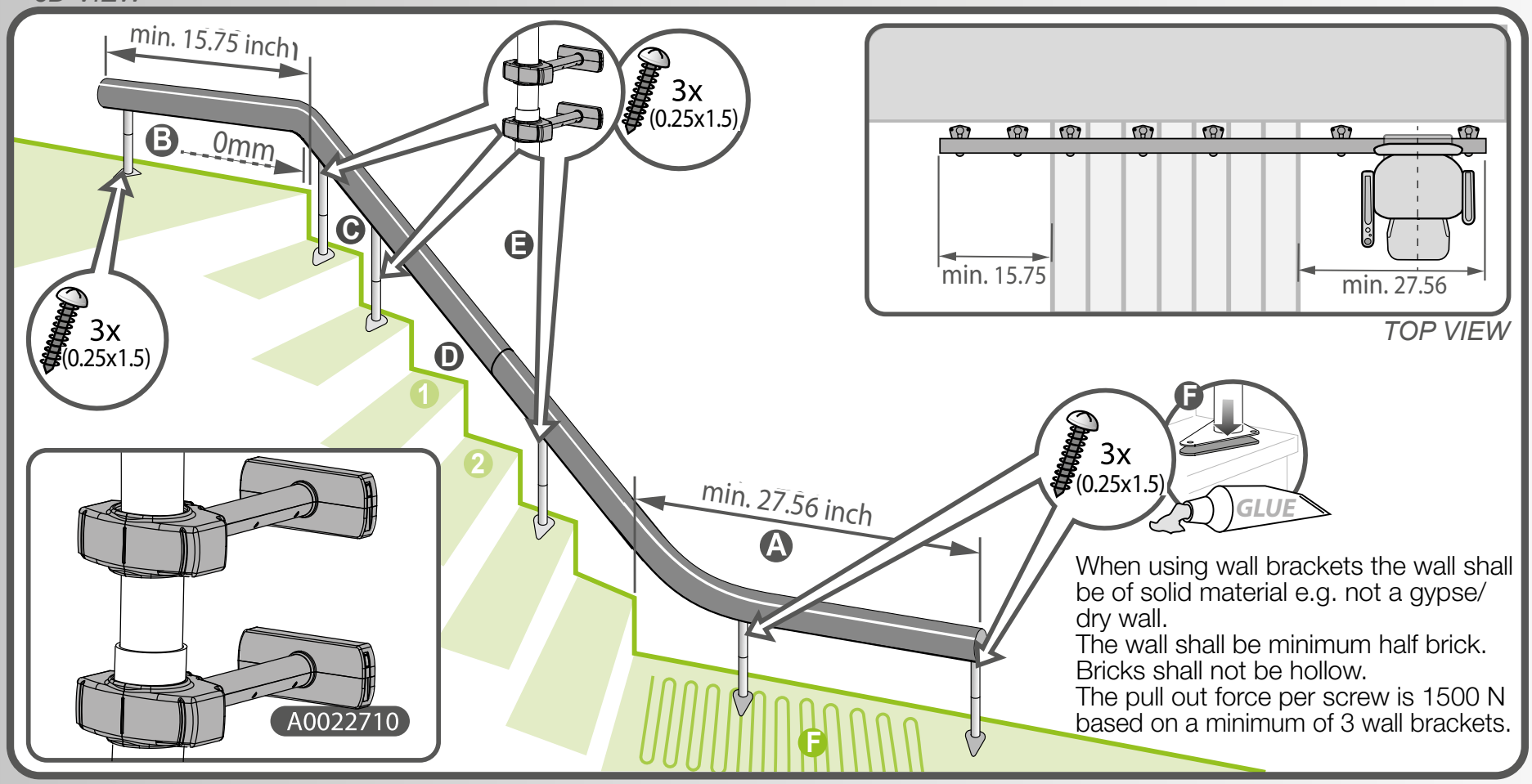

- **A** Mandatory:
  - Horizontal downstairs with a length of at least 27.56 inch. And two supports on the floor. ***OR***
  - Horizontal on intermediate landing if landing is at least 27.56 inch long. And two supports on the landing.
- **B** Top rail intrusion of 0 inch and lowered is possible.
- **C** Upstairs two supports next to each other. Maximum of 1 empty step.
- **D** Maximum of 2 steps without supports.
- **E** Attach all supports with wall brackets.
- **F** Floor heating is possible. Attach all supports with adhesive.

FIXATION RAIL_*straight stairs: S-bend*

3D-VIEW

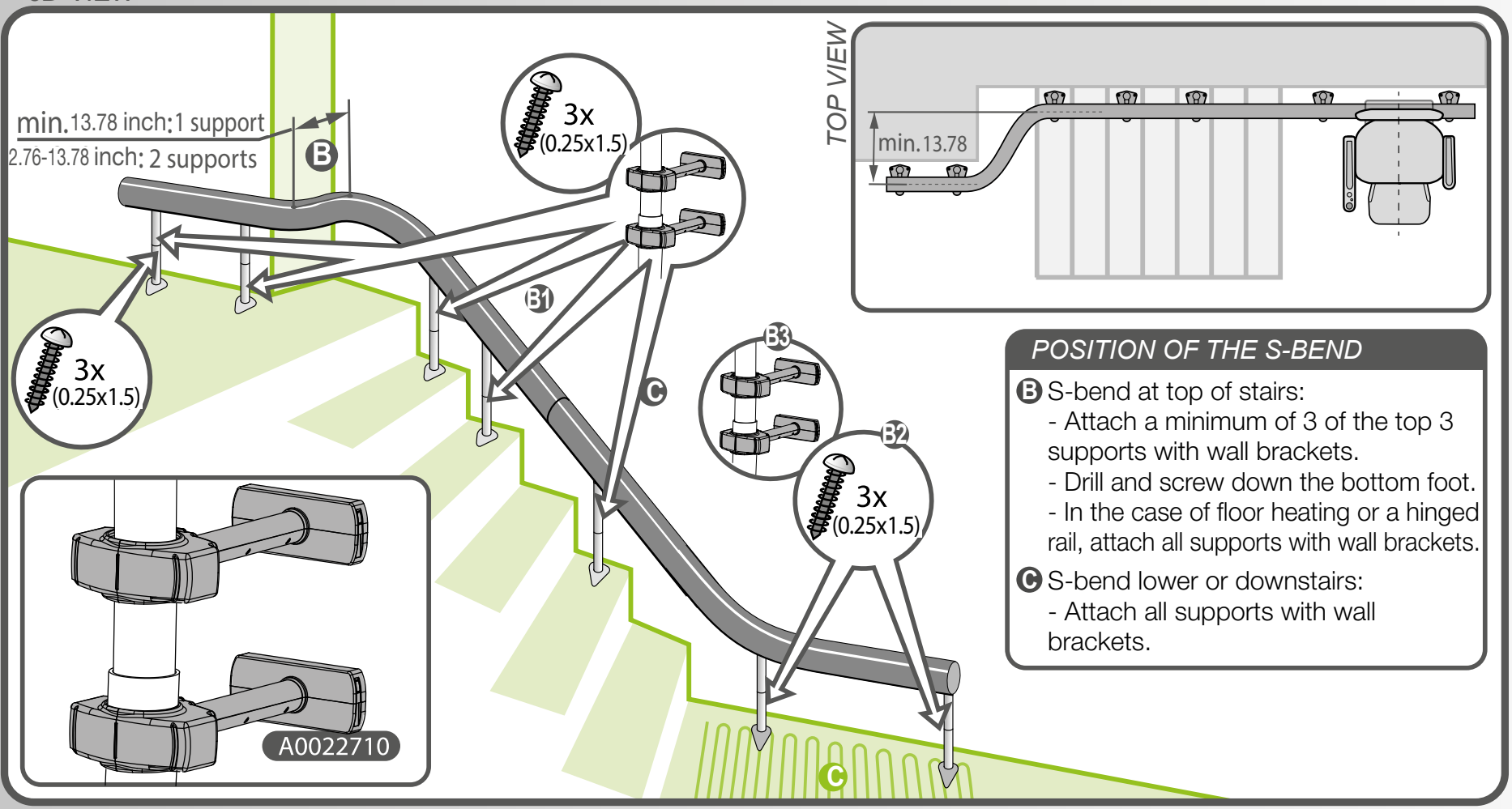

POSITION OF THE S-BEND

B S-bend at top of stairs:
- Attach a minimum of 3 of the top 3 supports with wall brackets.
- Drill and screw down the bottom foot.
- In the case of floor heating or a hinged rail, attach all supports with wall brackets.

C S-bend lower or downstairs:
- Attach all supports with wall brackets.

A Rail offset:
- Rail offset 13.78 inch or more: 1 support in this section of the rail.
- Rail offset between 2.76 inch and 13.78 inch: 2 supports in this section of the rail.

When using wall brackets the wall shall be of solid material e.g. not a gypse/dry wall.
The wall shall be minimum half brick. Bricks shall not be hollow.

FIXATION RAIL_*straight: double S-curve (rail runs around a column)*

3D-VIEW

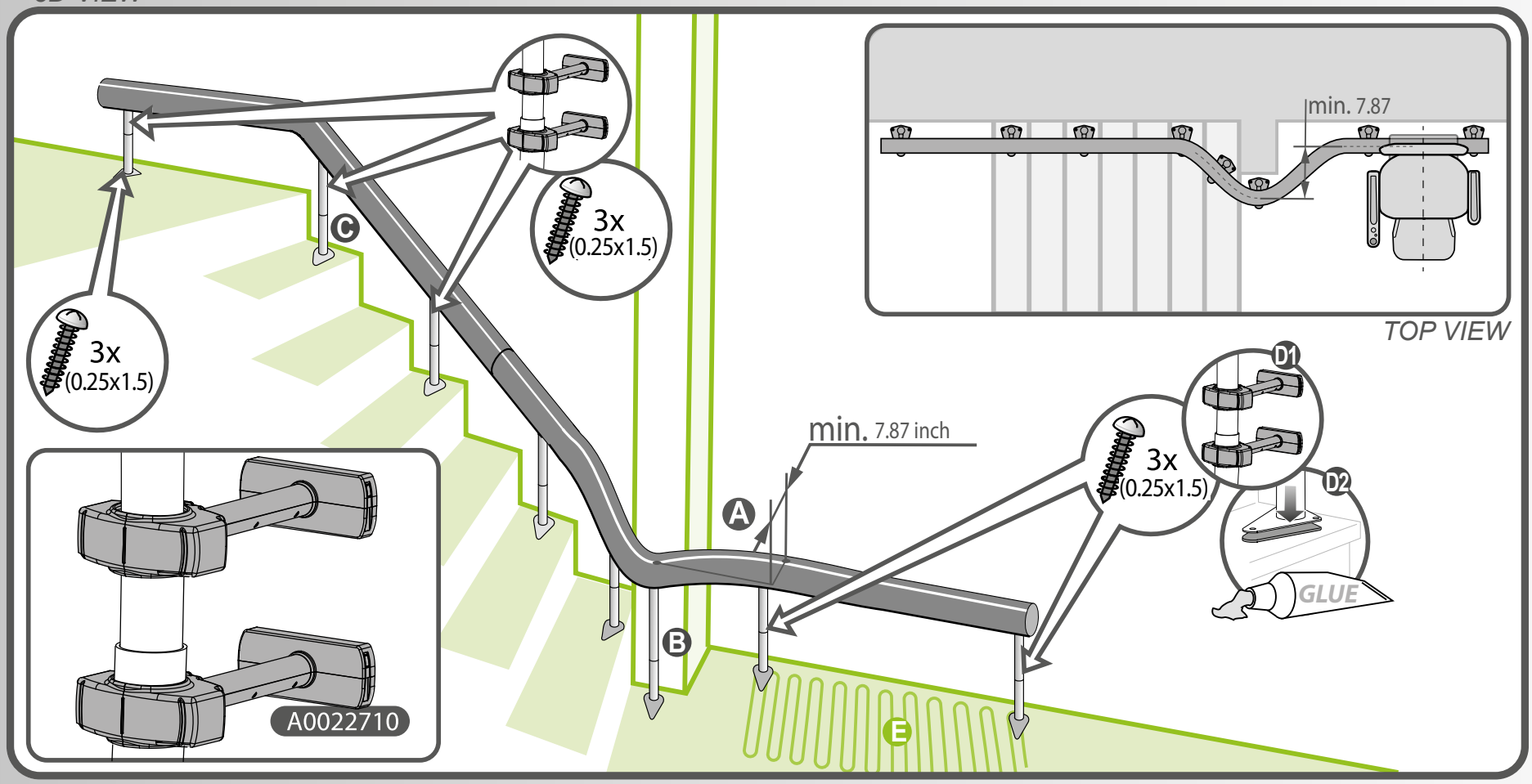

- **A** 7.87 inch or more behind the wall (13.78 inch perpendicular to the rail centreline).
- **B** Offset section of the rail supported by at least 1 support.
- **C** Attach a minimum of 3 of the top three supports with wall brackets.
- **D** Floor heating is possible.
  - Attach all supports with wall brackets.
  - Attach all supports with adhesive.

  When using wall brackets the wall shall be of solid material e.g. not a gypse/dry wall.
  The wall shall be minimum half brick. Bricks shall not be hollow.

MOUNTING

CURVED_*pos 1*
CURVED_*pos 2*
CURVED_*pos 3*
CURVED_*pos 4*
CURVED_*pos 5*
CURVED_*pos 6*
STRAIGHT_*pos1*
STRAIGHT_*pos 2*
STRAIGHT_*pos 3*
STRAIGHT_*pos 4*
STRAIGHT_*pos 5*



Tools

PHOTOSURVEY

3D-VIEW





To shorten the design process, prevent measurement errors, and to get a good idea of what the stairlift will look like in the customer's home environment, Handicare has developed PhotoSurvey4D. This is the number 1 measurement tool that provides 100% reliable measurements and 3D visualisation of the stairlift on the customer's stairs.
Handicare PhotoSurvey4D lets you show your customer the Handicare solution there and then.

Given that specific technical skills are no longer required, PhotoSurvey4D is easy to integrate into the sales process. It will allow you to save both time and money. Using this system and a mobile internet connection, your measurement or complete rail design can be at Handicare and accepted for further processing within 15 minutes!



Certificate

APPROVAL

FRONT VIEW

intertek
Total Quality. Assured.

AUTHORIZATION TO MARK

This authorizes the application of the Certification Mark(s) shown below to the models described in the Product(s) Covered section when made in accordance with the conditions set forth in the Certification Agreement and Listing Report. This authorization also applies to multiple listee model(s) identified on the correlation page of the Listing Report.

This document is the property of Intertek Testing Services and is not transferable. The certification mark(s) may be applied only at the location of the Party Authorized To Apply Mark.

Applicant:	Handicare Stairlifts B.V.	**Manufacturer:**	Handicare Stairlifts B.V.
Address:	Newtonstraat 35 1704 SB Heerhugowaard	**Address:**	Newtonstraat 35 1704 SB Heerhugowaard
Country:	The Netherlands	**Country:**	The Netherlands

Party Authorized To Apply Mark: Same as Manufacturer
Report Issuing Office: Intertek Testing Services NA, Inc., Arlington Heights, IL

Control Number: *5015845* **Authorized by:**

for L. Matthew Snyder, Certification Manager

C ETL US LISTED
Intertek

This document supersedes all previous Authorizations to Mark for the noted Report Number.

This Authorization to Mark is for the exclusive use of Intertek's Client and is provided pursuant to the Certification agreement between Intertek and its Client. Intertek's responsibility and liability are limited to the terms and conditions of the agreement. Intertek assumes no liability to any party, other than to the Client in accordance with the agreement, for any loss, expense or damage occasioned by the use of this Authorization to Mark. Only the Client is authorized to permit copying or distribution of this Authorization to Mark and then only in its entirety. Use of Intertek's Certification mark is restricted to the conditions laid out in the agreement and in this Authorization to Mark. Any further use of the Intertek name for the sale or advertisement of the tested material, product or service must first be approved in writing by Intertek. Initial Factory Assessments and Follow up Services are for the purpose of assuring appropriate usage of the Certification mark in accordance with the agreement, they are not for the purposes of production quality control and do not relieve the Client of their obligations in this respect.

Intertek Testing Services NA Inc.
545 East Algonquin Road, Arlington Heights, IL 60005
Telephone 800-345-3851 or 847-439-5667 Fax 312-283-1672

Standard(s):	Safety Standard for Platform Lifts and Stairway Chairlifts [ASME A18.1:2020 Ed.8] Elevator and Escalator Electrical Equipment [ASME A17.5:2019 Ed.6] Elevator and Escalator Electrical Equipment [CSA B44.1:2019 Ed.6] Platform Lifts And Stair Lifts For Barrier-Free Access [CSA B355:2019 Ed.7]
Product:	Stairway Chairlift
Brand Name:	handicare
Models:	Freecurve

The Freecurve complies with:

- Safety Standard for Platform Lifts and Stairway Chairlifts [ASME A18.1:2020 Ed.8]
- Elevator and Escalator Electrical Equipment [ASME A17.5:2019 Ed.6]
- Elevator and Escalator Electrical Equipment [CSA B44.1:2019 Ed.6]
- Platform Lifts And Stair Lifts For Barrier-Free Access [CSA B355:2019 Ed.7]

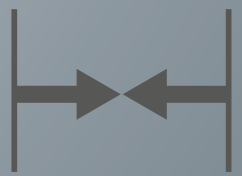

Summary

SUMMARY CONDITIONS

Posibilities

Minimum necessary stairwidth Van Gogh*:

Classic/Elegance/Alliance chair: 27.17 inch (swiveled ride)

Minimum necessary stairwidth Rembrandt*:

- Normal stair heigth.
- The total horizontal length of the lowest walls on the postal side has a total minimum length of 31.50 inch and the last wall shall have a minimum length of 7.87 inch.

Classic/Elegance/Alliance chair: 30.31inch (extended footrest)

Minimum necessary stairwidth to swivel upstairs in case of no overrun*:

Classic/Elegance/Alliance chair: 29.13 inch

Minimum necessary bulkhead:

Van Gogh

Straight stairs:	70.87 inch
Before curve:	74.80 inch
Beyond curve:	90.55 inch

Rembrandt

A Rembrandt needs approximately 11.81 inch more free height than Van Gogh.

* based on a upper leg length of 23.62 inch.

SUMMARY CONDITIONS

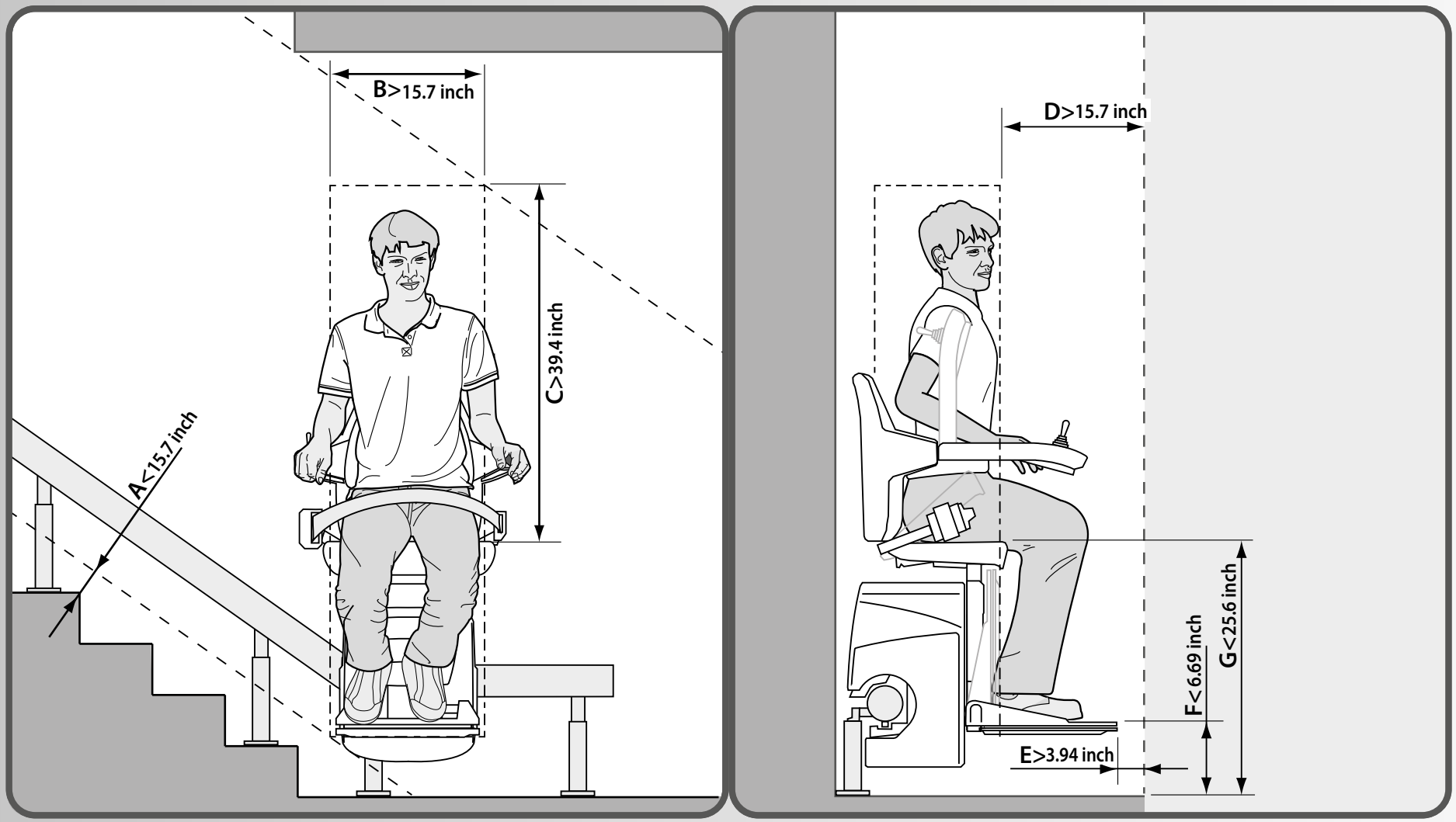

According to EN 81-40:2020: stairlifts installed for non-public access where the user(s) is known shall have minimum clearances as figure above.
Deviations may be allowed after agreement of a documented risk assessment.

TOPIC SEARCH

handicare

Seat types
Classic Seat 5
Elegance Seat 6
Alliance Seat 7
Child Seat 8

Stair types
Straight (A1/A2) 50
Not Straight (C/D/E/F/G/H) 51

Upstairs
Standard 91
Extension “0” 92
Footrest “0” 93
St._+Guard 94
Door in Front 95
Alley 96
Angle_van Gogh 97
Remb._Min. 7.87 inch 98
Remb._Max.7.87 inch 99
90º Park 100
180º Park 101

Lift types
Van Gogh 10
Rembrandt 11
Vermeer 12
Left/Right Hand 13

Van Gogh
User 53
Stringer 54
Obstable 55

Rembrandt
stair width 57
A-rail 58
C-rail 59
C-rail_wall< 200mm 60
C-rail_wall> 200mm 61
D-rail 62
E-rail 63
E-rail_wall< 200mm 64
E-rail_wall> 200mm 65
F-rail 66
G-rail 67
Upstairs_horizontal 68
Upstairs_90º park 69
Upstairs_180º park 70

Tips
Over Stringer 103
Landing 1st Step 104
Door Par_down1 105
Door Par_down2 106
Door Par_up1 107
Door Par_up2 108
Door Par_up3 109

Lift parts
Unit 15
Batteries 16
Footrest 17
Safetybelt 19
Body harness 21
Armrest 22
Swivel 23
Control 24
User Interface 25
Key Switch 26
The Emergency Stop 27
Remotes 28
Power Supply 29
Rail 30
Charging Points 31

Turning space
User 72
Seat 73

Attachments
Curved_pos 1 111
Curved_pos 2 112
Curved_pos 3 113
Curved_pos 4 114
Curved_pos 5 115
Curved_pos 6 116
Straight_Pos1 117
Straight_Pos 2 118
Straight_Pos 3 119
Straight_Pos 4 120
Straight_Pos 5 121

Options
Powered Footrest 33
Powered Swivel 35
Active Seat 36
Hinge 37

Extra options
Tap**2**floor 40
Easy Call 41
Ultra Power Kit 42
Handrail 43

Bulkhead
Bulkhead 75

Tools
PhotoSurvey 123

Approval
EC Certificate 125

Summary
Summary 127
Minimum clearances 128

Dimensions
Classic 45
Elegance 46
Alliance 47
Active Seat 48

Downstairs
Basic finish 77
Standard 60º 78
Short Railend 79
Short R_+Guard 80
Short R_+Charge 81
Hinge_van Gogh 82
Hinge_rembrandt 83
Specific length 84
90º Park_standard 85
90º Park_horizontal 86
180º Park_standard 87
180º Park_horizontal 88
First Stair Step 89

All rights reserved. No part of this publication may be reproduced and/or published by means of print, photocopy, microfilm or in any other way or form, without prior written permission from the manufacturer. This also applies for the accompanying drawings and diagrams. The manufacturer reserves the right to change parts at any time, without prior or direct notification to the customer. The dimensions in this manual might vary from the actual situation due to the size, shape and angle of the stairs.The contents of this manual may also be changed without prior warning.
This manual has been compiled with the best intentions and every possible care but the manufacturer cannot accept responsibility for any errors in this manual or for the consequences thereof.

The English manual is the original language.

Handicare Stairlifts B.V.
Newtonstraat 35
1704 SB Heerhugowaard
The Netherlands
T +31 (0)72 576 88 88
traplift@handicare.com

Handicare Accessibility Ltd.
82 First Avenue,
Pensnett Estate Kingswinford,
West Midlands DY6 7FJ,
England T +44 (0)1384 408700
enquiries@handicare.co.uk

Handicare Monte-escaliers
4 Rue des Piverts, ZAC de l' Aunaie
91610 Ballancourt-sur-Essonne
France
T +33 (0)1 84 88 73 77
tps.fr@handicare.com

Handicare Accessibility GmbH
Lübbecker Strasse 240
32429 Minden
Deutschland
tel+49 (0) 571 97 33 98 -55
tps.de@handicare.com

Handicare Montascale
Via Chiaviche 17
46020 Pegognaga (MN)
Italy T +39 (0)376 143 3516
Montascala@handicare.com

Handicare USA
Inc. 10888 Metro Court
St. Louis, MO 63043
United States of America
Toll Free: 1.888.637.8155
Local: 314.692.9135
sales.us@handicare.com

Savaria Canada
2 Walker Drive Brampton,
ON L6T 5E1 Canada
T 1.905.791.5555
T 1.855.728.2742
info@savaria.com

www.handicare .com

handicare by Savaria®

11P00442_US_Z4, 10-11- 025

home