Handicare

Freecurve Alliance

Einzelschienen-Kurventreppenlifte

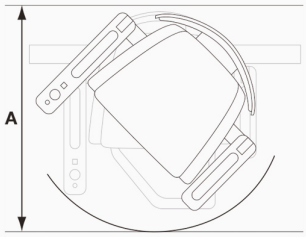

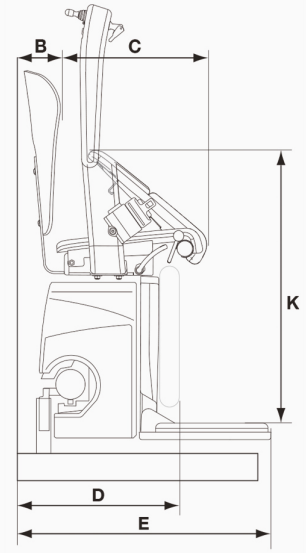

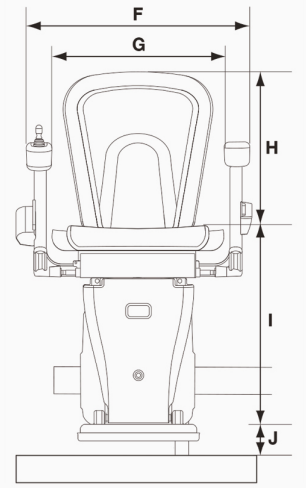

Asiento Alliance		Dimensiones	
		Van Gogh	Rembrandt
A	Swivel radius*	658-700mm	678-720mm
B	Wall to inner seat back	105mm	125mm
C	Seat depth	380mm	385mm
D	Minimum folded width to footplate	420mm	440mm
E	Minimum open width to edge footplate	640mm	660mm
	Offset footplate	610mm	630mm
F	Armrest width – external	565-595mm	565-595mm
G	Armrest width – internal	435-465mm	435-465mm
H	Seat back height	395-415mm	395-415mm
I	Footplate to seat height	495mm	495mm
J	Minimum footplate height	100/125mm	100/125mm
K	Height between footplate and raised seat	705mm	705mm
	Minimum track intrusion into staircase	170mm	190mm
	Maximum weight limit	125kg	125kg

* Dimensions may vary depending on hand of seat

Some of the above dimensions depend on the characteristics of the staircase in the home. Please consult the sales manual for further information about these dimensions and features of this seat. All information is provided in good faith but does not constitute a guarantee. Handicare reserves the right to alter designs and specifications without prior notice.

Handicare

Freecurve Classic

Single Rail Curved Stairlifts

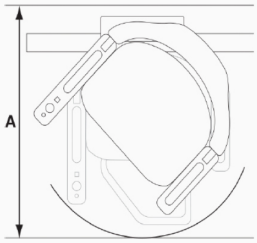

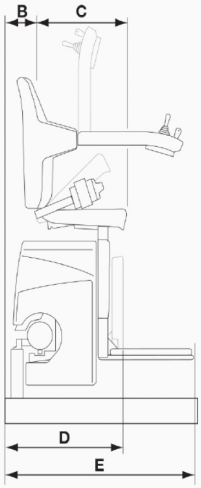

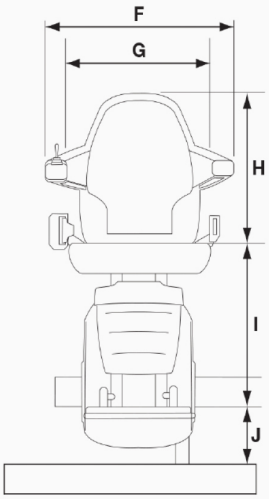

	Classic Seat	Dimensions	
		Van Gogh	Rembrandt
A	Swivel radius*	28.75- 26.19in	29.53- 26.97in
B	Wall to inner seat back	4.14in	4.93in
C	Seat depth	14.57in	14.57in
D	Minimum folded width to footplate	16.54in	17.33in
E	Minimum open width to edge footplate Offset footplate	25.2in 24.02in	26in 24.81in
F	Armrest width – external	22.05in (20.9–24.8 in)	22.05in
G	Armrest width – internal	17.33in	17.33in
H	Seat back height	15.75in	15.75in
I	Footplate to seat height	18.71in	18.71in
J	Minimum footplate height	3.94/4.93in in)	3.94/4.93in
	Minimum track intrusion into staircase	6.7in	6.7in
	Maximum weight limit	275lbs	275lbs

* Dimensions may vary depending on hand of seat

Some of the above dimensions depend on the characteristics of the staircase in the home. Please consult the sales manual for further information about these dimensions and features of this seat. All information is provided in good faith but does not constitute a guarantee. Handicare reserves the right to alter designs and specifications without prior notice.

Handicare

Freecurve Elegance

Single Rail Curved Stairlifts

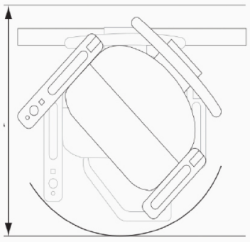

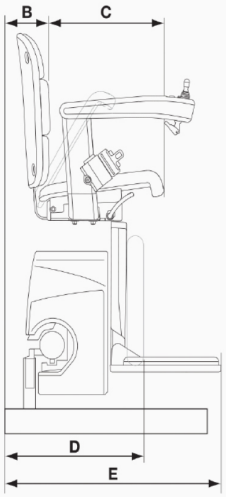

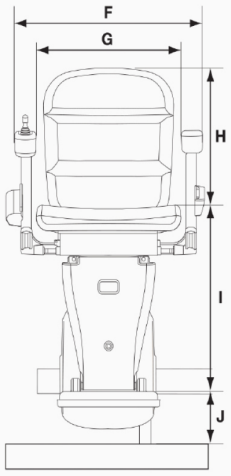

Elegance Seat		Dimensions	
		Van Gogh	Rembrandt
A	Swivel radius*	25.91/27.56 in	26.68/28.35 in
B	Wall to inner seat back	4.34in	5.19in
C	Seat depth	15in	15in
D	Minimum folded width to footplate	16.54in	17.33in
E	Minimum open width to edge footplate Offset footplate	25.2in 24.02in	26in 24.81in
F	Armrest width – external	22.25 -23.43in	22.25-23.43in
G	Armrest width – internal	17.13in-18.31in	17.13in-18.31in
H	Seat back height	15.56-16.34in	15.56-16.34in
I	Footplate to seat height	19.29in	19.5in
J	Minimum footplate height	3.94/4.93in in)	3.94/4.93in
	Minimum track intrusion into staircase	6.7in	7.49in
	Maximum weight limit	275lbs	275lbs

* Dimensions may vary depending on hand of seat

Some of the above dimensions depend on the characteristics of the staircase in the home. Please consult the sales manual for further information about these dimensions and features of this seat. All information is provided in good faith but does not constitute a guarantee. Handicare reserves the right to alter designs and specifications without prior notice.