REVISIONS				
REV.	DESCRIPTION	BY	CHK	DATE
A	DRAWING CREATION; ECO-008845	DT	CMP	23OCT23

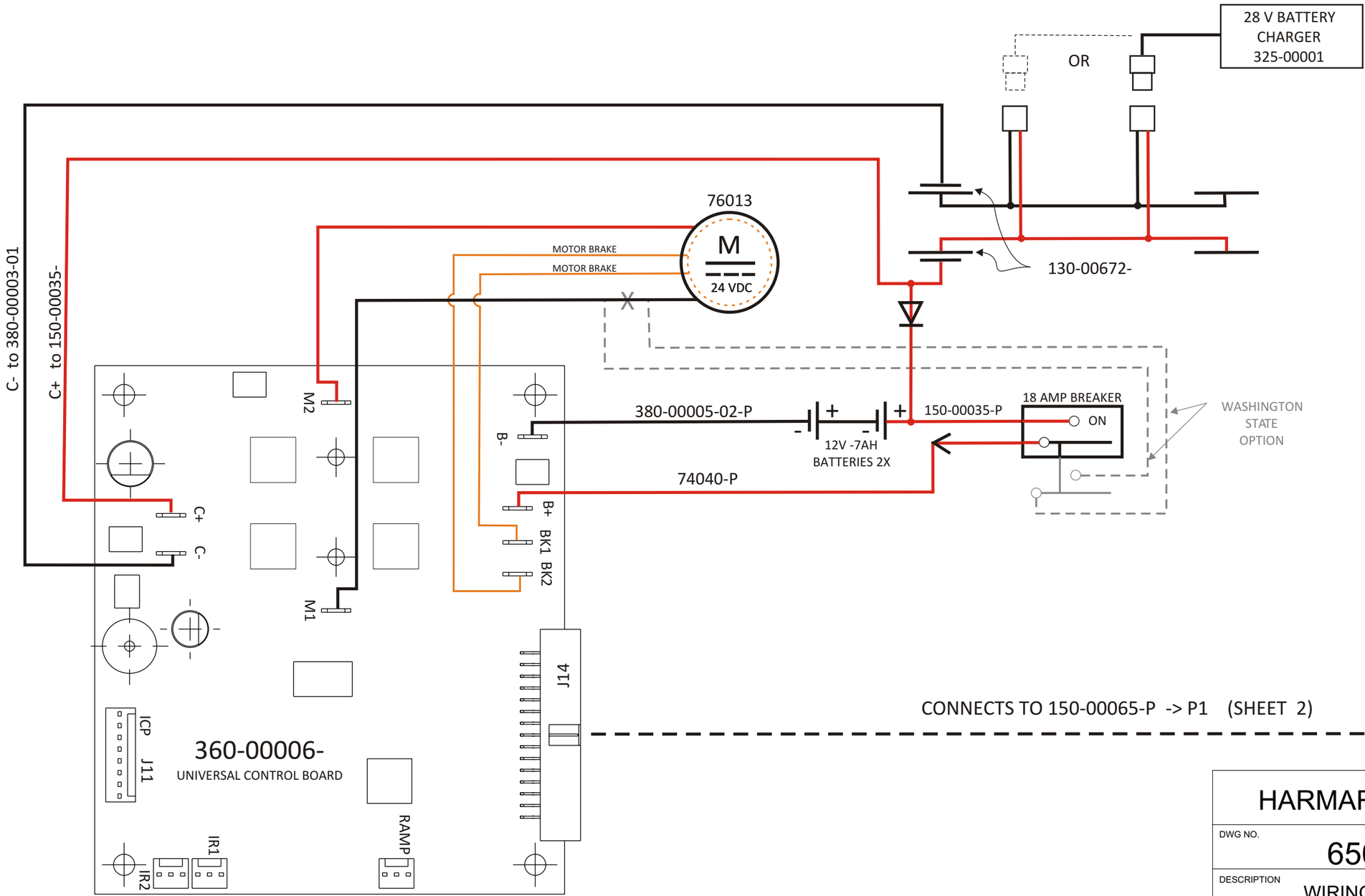

HARMAR MOBILITY, LLC

DWG NO.	REV
650-00011-	A

DESCRIPTION

WIRING DIAGRAM SL600

EASY FOOTREST AND POWER SWIVEL OPTION

DRAWN BY / DESIGNED BY	DATE
DAN TOOLAN / CARLOS PENA	21JUN23

SCALE NTS | SIZE: B | SHEET 1 OF 3

SEE SHEET 1 FOR REVISION HISTORY

4514
MICROSWITCH PLUNGER

130-00671-
SWITCH SUB ASSY

4529

UP OBSTRUCTION SWITCHES

DOWN OBSTRUCTION SWITCHES

CHASSIS SWITCHES

INSTALLATION SWITCH

TO 380-00005-02-P
HRNS, BATTERY NEGATIVE WITH CAPACITOR

TO 74040-P
HRNS, PCB CONTROLLER BRKR(+)

B - B +

J2-1

TO -> J2
SHEET 3
360-00024-
STAIR LIFT OPTION PCB

TO -> 30 PIN CONNECTOR
SHEET 1
360-00006-
UNIVERSAL CONTROL BOARD

P1

150-00065-P
SL 600 OPTION HARNESS

KEY SWITCH OPTION 2:
TOTAL LOCKOUT

KEY SWITCH OPTION 1:
ARMREST LOCKOUT

TO 74080-EZ
EZ FOOTREST SEAT HARNESS
P1 FOR R.H. VERSION

TO 74080-EZ
EZ FOOTREST SEAT HARNESS
P1 FOR L.H. VERSION

TO 150-00151-
SEAT SWITCH

TO 350-00015-
SEAT SWIVEL MOTOR

TO 74070
HRNS, FOOTREST
FOR R.H. VERSION

TO 74070
HRNS, FOOTREST
FOR L.H. VERSION

P1 P2 P3 P4 P5 P6 P7

130-00238-P
POWER SWIVEL PLUG PLATE

PLUG PLATE

130-00238-P
PLUGPLATE

HARMAR MOBILITY, LLC	
DWG NO. 650-00011-	REV A
DESCRIPTION: WIRING DIAGRAM SL600 EASY FOOTREST AND POWER SWIVEL OPTION	
DRAWN BY / DESIGNED BY: DAN TOOLAN / CARLOS PENA	DATE: 21JUN23
SCALE NTS	SIZE: B
SHEET 2 OF 3	

SEE SHEET 1 FOR REVISION HISTORY

150-00150-
EZ-FOOTREST MOTOR CABLE

UP LIMIT
LS 2
COM
NC
BLACK
GRAY
WHITE
BLUE
BLACK
GRAY
COM
NC
LS 3
DOWN LIMIT

P1
J1
J1
350-00017-W
EZ-FOOTREST MOTOR
W/ WIRES

360-00024-
STAIR LIFT OPTION PCB
J2
J3
TO -> J2-1
SHEET 2
150-00065-P
SL600
OPTION HARNESS

J3-1
150-00149-
EZ-FOOTREST CHASSIS CABLE
WHITE
ORANGE
BROWN
BLUE
GREEN
RED
BLACK
J7

74080-EZ
EZ-FOOTREST PINNACLE
SEAT HARNESS
P7
P1
TO P4 or P5
150-00065-P
SL600 MAIN HARNESS
LED
TO 150-00151-
SEAT SWITCH
P4
74085
HRNS, ARMREST SWITCH
P2
P3
OPTIONAL
SIDE
BLUE
WHITE
RED
GREEN
ORANGE
BLACK
BLUE
RED
WHITE
BLUE
GRAY
BLACK
ORANGE
GREEN
BLACK
WHITE
RED

130-00541-EZ
ARMREST CONTROL

150-00149-
J7
J1
150-00150-

OFF
ON
PLUG PLATE

130-00238-P
POWER SWIVEL
PLUG PLATE
130-00238-P
PLUG PLATE

150-00148-
EZ-FOOTREST
TOGGLE CABLE
P8
P6
P5
BLACK
WHITE
RED
OPTIONAL
SIDE
130-00541-EZ
ARMREST CONTROL

HARMAR MOBILITY, LLC	
DWG NO. 650-00011-	REV A
DESCRIPTION: WIRING DIAGRAM SL600 EASY FOOTREST AND POWER SWIVEL OPTION	
DRAWN BY / DESIGNED BY: DAN TOOLAN / CARLOS PENA	DATE: 21JUN23
SCALE NTS / SIZE: B	SHEET 3 OF 3