pollock Lifts

# POLLOCK RESIDENTIAL ELEVATOR



# OWNER'S MANUAL

HARMAR® we lift lives

12SEP25 | 610-00110 A

# THANK YOU

From all of us at Harmar, thank you for placing your trust in our products and allowing us to be a part of your journey.

For more than 20 years we have been committed to creating products that help you maintain independence. With a drive to empower people to live as they choose, Harmar Lifts Lives.

We strive to be the leading provider of lift assisting technology in your home and on the road.

Visit harmar.com or speak to your dealer about the other solutions available from Harmar.

# TABLE OF CONTENTS

**SAFETY** ..... **4**
Safety Definitions ..... 4
Warnings ..... 4
Safety Features ..... 5
**INTRODUCTION** ..... **6**
Device Name: Pollock Residential Elevator ..... 6
Read and Understand ..... 6
Purchasing Information ..... 6
Technical Specifications ..... 6
Drive Systems ..... 6
Elevator Sizes and Options ..... 6
Seating ..... 6
**OPERATION** ..... **7**
Cabin Controls ..... 7
Remote Call Station ..... 8
Moving the Lift (From Outside the Elevator) ..... 9
Opening the Door (From Outside the Elevator) ..... 9
Entering the Elevator ..... 9
Closing the Door (From Inside the Elevator ..... 9
Traveling in the Elevator ..... 9
Additional Elevator Features ..... 9
Locking the Lift ..... 10
Long-Term Shut Off ..... 10
Emergency Lowering of the Elevator ..... 10
Emergency Opening of the Elevator Door ..... 11
**MAINTENANCE** ..... **12**
Periodic Examination ..... 12
Periodic Servicing ..... 12
Maintenance Schedule ..... 12
**TROUBLESHOOTING** ..... **13**
Elevator Stops Operating ..... 13
Fault Display Messages Table ..... 14
Troubleshooting Table ..... 15
**WARRANTY** ..... **16**

SECTION 1

# SAFETY

## SAFETY DEFINITIONS



This safety alert symbol appears with safety statements. It means attention, become alert, your safety and the safety of others are involved! Please read and abide by the message that follows the safety alert symbol.

**⚠ WARNING**

**Indicates a hazardous situation that, if not avoided, could result in death or serious injury.**

**⚠ CAUTION**

**Indicates a hazardous situation that, if not avoided, could result in minor or moderate injury.**

**NOTICE**

*Indicates a situation which can cause damage to the lift and/or the environment, or cause the lift to operate improperly.*

*NOTE: Indicates a condition that should be followed in order for the lift to function in the manner intended.*

## WARNINGS

- Do not turn the mains power supply switch off.
- Do not stand under the elevator when it is descending.
- Do not stand on the trapdoor when the elevator is ascending.
- Do not attempt to open the elevator door when the elevator is in motion.
- Do not allow children to use the elevator unsupervised.
- Do not manually open or move the elevator during a fire as this could result in abrupt spreading of the fire.
- Do not exceed the recommended safe working load as depicted on the Elevator Load Warning Plate.
- Do not exceed the seat carrying capacity of 500 lb (230kg)
- Never attempt to exit the elevator if for any reason the elevator should fail to reach a stop. Use the alarm button, and telephone to gain assistance.
- Never attempt to climb out of a moving or stationary elevator – call for assistance, manually lower the elevator, and then manually open elevator door before exiting.
- Never attempt to exit the elevator should the safety gear trigger. It is recommended you wait for an approved technician who will safely assist you from the elevator.
- Safety gear, if triggered, must be reset by an approved technician ONLY. An approved technician in this context, is a competent person with the necessary tools, instructions, appropriate training and sufficient experience of the equipment.

# SAFETY FEATURES

1. **DOOR:** The door has a fully secure interlock which can be opened at either landing by the buttons outside the elevator, or from the control panel inside the elevator.

2. **UPPER SENSITIVE SURFACE:** The upper sensitive surface fully covers the top of the elevator. This is a safety measure to prevent trapping between the elevator and the ceiling as the elevator ascends. Light pressure on the sensitive surface will immediately stop the elevator, which can then move downwards away from the obstruction.

3. **BOTTOM TRAY:** The bottom tray closes the ceiling aperture to create a fire seal when the elevator is at the upper level. The bottom tray also acts as a sensitive surface when the elevator is descending.

   Should an obstruction below the elevator be encountered, the spring loaded tray will activate the safety switches forcing the elevator to stop immediately. The elevator will then only move upwards away from the obstruction.

   Conversely, if an obstruction is detected as the elevator is ascending, the separation switch will activate and stop in the up direction. The elevator will then only move downwards away from the obstruction.

4. **SMART DISPLAY:** Pollock are industry leaders, introducing innovative service and fault finding controls, through the use of our standard on board 4 line display (7" color display optional) which is located at the rear inside the cabin.

   This will allow the user to see the status of the elevator and can be used for diagnostic checks and maintenance by the user and our engineering product support team.

5. **CHILD LOCK**: The child lock is used to prevent accidental or unsupervised operation of the elevator. See page 10 on how to activate the Lock Lift feature.

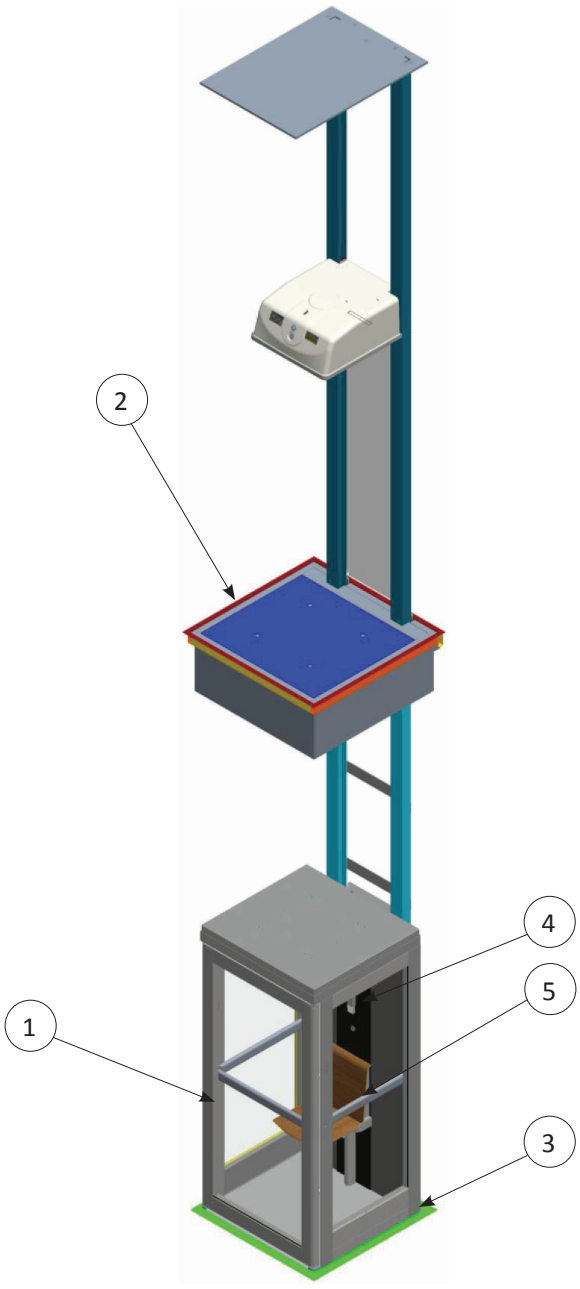

SECTION 2

# INTRODUCTION

## DEVICE NAME: POLLOCK RESIDENTIAL ELEVATOR

Indications of Use: The Harmar Pollock Residential Elevator is to aid in the safe and efficient transfer of individuals with or without limited mobility or disabilities, along with their mobility devices, between different levels of a residential building.

## READ AND UNDERSTAND

This manual provides instructions for proper use and maintenance of your Pollock Residential Elevator. Please refer to this owner's manual for operating instructions. Any alterations to the equipment without written authorization by the manufacturer is prohibited and will void the warranty.

## PURCHASING INFORMATION

If you have questions concerning the operation and maintenance of your Pollock Elevator, please contact your dealer. Please ensure that you fill out the separate warranty form and return it within ten (10) days of purchase to register your lift.

## TECHNICAL SPECIFICATIONS

Visit harmar.com for specifications on the specific lift model and configuration.

## DRIVE SYSTEMS

### ROPED WINDING DRUM:

An electric motor is located at the top of the tracks at the second floor ceiling level, and is attached to the elevator with steel cables.

## ELEVATOR SIZES AND OPTIONS

The Pollock Residential Elevator is available in a range of sizes and configuration options.

## SEATING

### TIP-UP SEAT:

The seat can be fixed directly to the back of the lift car. It has a carrying capacity of 265 pounds (120kg)

The seat is designed so it can be tipped up to allow access for a wheelchair on the large model.

SECTION 3

# OPERATION

## CABIN CONTROLS

Located inside the cabin, or on the left or right side handrail of the elevator, the main control panel buttons perform the following operations.
***See Figures 2-1 through 2-7.***

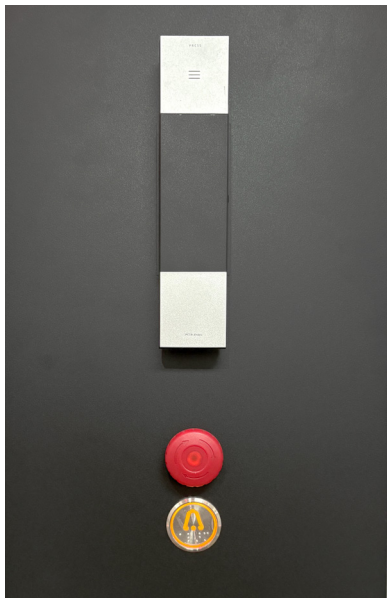

*Figure 2-1*




*Figure 2-2*




*Figure 2-3*

### OPEN AND CLOSE THE DOOR

The door button will release the door lock when the lift is parked at the upper or lower level, allowing the door to be opened manually.

The door will open and close automatically if a power door operator has been fitted.



*Figure 2-4*

### TRAVEL UPWARDS

- Shaftless (non-latching button): Press and continue to hold throughout travel.
- Hoistway (latching button): Press and hold until elevator moves.



*Figure 2-5*

### TRAVEL DOWNWARDS

- Shaftless (non-latching button): Press and continue to hold throughout travel.
- Hoistway (latching button): Press and hold until elevator moves.



*Figure 2-6*

### ALARM BUTTON

Activate or deactivate the integrated alarm.




*Figure 2-7*

### EMERGENCY STOP

Stop the elevator at any time.

## REMOTE CALL STATION

Located on a wall adjacent to the elevator itself, the battery powered call station allows the following operations to be performed from outside the elevator. ***See Figures 2-8 through 2-13.***



*Figure 2-8*



*Figure 2-9*

### UNLOCK THE DOOR

Open and close where power door operator has been fitted.



*Figure 2-10*

### TRAVEL UPWARDS

- Shaftless (non-latching button): Press and continue to hold throughout travel.
- Hoistway (latching button): Press and hold until elevator moves



*Figure 2-11*

### TRAVEL DOWNWARDS

- Shaftless (non-latching button): Press and continue to hold throughout travel.
- Hoistway (latching button): Press and hold until elevator moves.



*Figure 2-12*

### ALARM BUTTON

Switch off alarm and sounder.

- Hold for 1 second to silence alarm.
- Hold for 5 seconds to reset and clear alarm.



*Figure 2-13*

### EMERGENCY STOP

Stop the elevator at any time.

***Note: The remote control device complies with Part 15 of the FCC rules.***
*Operation is subject to the following two conditions:*

*(1) This device may not cause harmful interference, and*

*(2) This device must accept any interference received, including interference that may cause undesired operation.*

## MOVING THE LIFT (FROM OUTSIDE THE ELEVATOR)

Press and hold the blue up button or the green down button on the remote call station until the lift begins to move. Continue holding the button throughout travel if controls are non-latching (shaftless).

## OPENING THE DOOR (FROM OUTSIDE THE ELEVATOR)

Press the illuminated door button on the side of the elevator, or on the call station. Either option unlocks the door allowing it to be opened.

If a power door operator is fitted it will open automatically.

## ENTERING THE ELEVATOR

Hold on to the elevator's rail if standing, or position yourself comfortably on the tip-up seat (if fitted).

## CLOSING THE DOOR (FROM INSIDE THE ELEVATOR)

Pull the door closed, or if your elevator is fitted with a power door operator, press the open and close door button on the control panel in the elevator. In both cases, when the door is closed the lock will engage.

## TRAVELING IN THE ELEVATOR

### TRAVEL UPWARDS

Press and hold the button with arrow facing up on the control panel until the elevator begins to move. Continue holding the button throughout travel if controls are non-latching (shaftless).

### TRAVEL DOWNWARDS

Press and hold the button with arrow facing down on the control panel until the elevator begins to move. Continue holding the button throughout travel if controls are non-latching (shaftless).

### STOP ELEVATOR

Press the emergency stop button on the control panel.

## ADDITIONAL ELEVATOR FEATURES

### SOUND ALARM

Press the alarm button on the control panel. ***See Figure 2-5.***

### IN-CABIN PHONE

Use the phone as you would your household phone.

# LOCKING THE LIFT

*NOTE: If required, this feature must be enabled during installation of the elevator.*

If the elevator needs to be made inoperable for a short period of time the following procedure should be followed.

## ROPED WINDING DRUM MODEL

1. Move the elevator to the first floor.
2. Press and hold the blue up button for 10 seconds. The display will show lift car locked.
3. To unlock, press and hold the blue up button for 10 seconds.

# LONG-TERM SHUT OFF

If the elevator is to be rendered inoperable for longer periods of time, please contact your service provider.

# EMERGENCY LOWERING OF THE ELEVATOR

You can lower the elevator by using one of the following methods. Please call you service engineer if you are unsure of how to complete the actions detailed below.

**⚠ WARNING**

**Emergency lowering disables all lift safety edges, and such there is a crushing risk to people or objects outside the lift.**

**Emergency lowering should only be used when the area is clear of people or obstacles, and the elevator can be fully monitored during the full descent. Two people may be required.**

## OPTION 1 (REMOTE CONTROL)

1. Ensure the area underneath the elevator is clear of people and obstacles.
2. Switch off the power supply to the elevator by turning off the mains power switch, located on the wall beside the motor mount.
3. Remove the screw from the battery cover.
4. Remove the remote call station's battery cover.
5. Press and hold the hidden button beside the battery. ***See Figure 3-1.***




*Figure 3-1*

6. While continuing to hold the hidden button and green down button simultaneously, the elevator will descend and emit an alarm throughout the process.
7. Once the elevator has reached the ground floor both buttons may be released. Refit the battery cover and screw.

## OPTION 2 (MANUALLY)

1. Ensure the area underneath the elevator is clear of people and obstacles.
2. Switch off the mains power switch, located on the wall beside the motor mount.
3. Rotate the hand-winder access cover counter-clockwise.
4. Insert the hand-winding wheel into the hole in the motor mount cover. You should feel the hand-winding wheel locate onto an internal shaft. ***See Figure 3-2.***

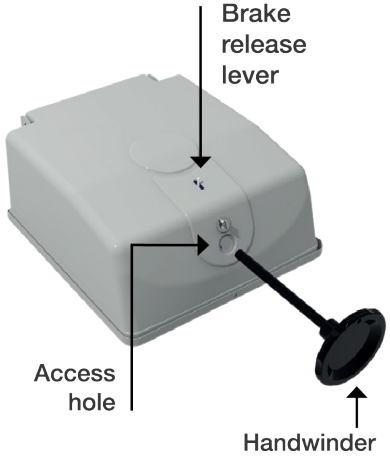


*Figure 3-2*

5. Pull back on the brake release lever and simultaneously rotate the hand wind wheel counter-clockwise to lower the lift.
6. When the lift car has reached floor level, remove the hand winding wheel.
7. Turn the hand-winder access cover clockwise to close.

# EMERGENCY OPENING OF THE ELEVATOR DOOR

The door release key should ideally be stored in a familiar location nearby the cabin. ***See Figure 3-3.***



*Figure 3-3*

1. Do not open the door unless the elevator is correctly positioned at the upper or lower landing, which can be confirmed by checking if the LCD display shows the message LIFT FULLY UP or LIFT FULLY DOWN respectively.
2. Locate the door release slot on the elevator's side, just above the door button. ***See Figure 3-4.***
3. Insert the door release key supplied into the bottom of the slot and lift upwards to release the door lock mechanism, this can be done either from inside or outside the cabin.
4. Open the door.
5. Lower and extract the door release key.
6. Press and hold the door button for 3 seconds to reset the lock.




*Figure 3-4*

SECTION 4

# MAINTENANCE

Make sure to keep your elevator, surrounding area, and elevator tracks clean. The panels, glass and tracks should be cleaned every two weeks.

Wipe your elevator and tracks using a damp cloth and an ammonia free cleaning solution. For the polycarbonate (Perspex) panels, only use a polycarbonate cleaner to reduce the risk of streak damage.

## PERIODIC EXAMINATION

Once installation is complete and the elevator has been commissioned, the service counter will be set to ZERO and the LCD display will inform you when your next service is due if required earlier than at six monthly intervals.

- If necessary, the technician may recommend more frequent examinations to ensure continued safe and reliable operation. Any recommended repairs will be noted, including a time scale for completion.
- Should a defect directly affecting safety which requires immediate repair be reported, the elevator will have to be taken out of service.
- Any maintenance or service should be recorded in the elevator's service log.

## PERIODIC SERVICING

The elevator should be thoroughly serviced by a qualified technician within six months of commissioning and thereafter at intervals not exceeding six months, or as called for by the service counter. The service counter will reset to ZERO on completion of service.

*Note: Call outs and service visits may be combined to minimize disruption. At each service any serious defects should be rectified and an engineering test carried out and logged.*

## MAINTENANCE SCHEDULE

### RECOMMENDED EVERY 6-MONTHS

- Check for motor gearbox leaks
- Check wear pads for gaps
- Lubricate ACME screw with Nook PAG-1 ACME Screw Grease. Check all structural connections/ hardware
- Inspect the safety brake
- Ensure the electrical disconnect works as intended
- Check all interlocks and obstruction sensors

**NOTICE**

*We recommend this be performed by a qualified service technician.*

SECTION 5

# TROUBLESHOOTING

## ELEVATOR STOPS OPERATING

If the elevator fails to operate, please contact the technician immediately should any of the following occur:

1. Activation of the emergency brake,
2. Malfunction of the fire seal system
3. Unusual noises coming from the lift.

Check the display at the back of the elevator, which will show a message relating to the fault, and contact the Technician informing them of the fault display message. Lifts with a 4 line display, the faults and resolutions are detailed below. Lifts with a full color 7" display, the faults and resolutions are shown graphically on the screen.

## FAULT DISPLAY MESSAGES TABLE

| 4 LINE DISPLAY MESSAGE | 7" DISPLAY CODE | POSSIBLE CAUSE | ADVISED ACTION |
|---|---|---|---|
| **Stop Btn Pressed** | **Image*** | Stop button pushed - in the cabin or on the call station | Check button |
| **Mains off** | **Image*** | Main power off | Check main power is on |
| **Carrier Safety** | **5** | | Call technician |
| **Slack Ropes** | **6** | | |
| **Final Limit Sw** | **Image*** | | |
| **Over Speed Sw** | **8** | | |
| **Hand-Wind Switch** | **9** | | |
| **External Stop** | **11** | Stop button pressed on wall mounted control | Check button |
| **Drive Fault** | **12** | | Call technician |
| **Over Travel Sw** | **101** | | |
| **Door Lock Fault** | **240** | Door lock has not locked | Open and close door |
| **Tray Sep Left** | **108** | Bottom tray has been impeded going up | Remove obstacle and ensure edge can move freely |
| **Tray Sep Right** | **109** | Bottom tray has been impeded going up | |
| **Tray Safety Left** | **202** | Bottom tray has been impeded going down | |
| **Tray Safety Right** | **203** | Bottom tray has been impeded going down | |
| **Trapdoor Up Sw** | **107** | Trapdoor has been impeded going up | |
| **Trapdoor Down Sw** | **204** | Trapdoor has been impeded going down | |
| **Tray Separation Fault** | **206** | A spring holding the bottom tray has failed | Call technician |
| **Trapdoor Fault** | **112** | Trapdoor has failed to move with lift car | |
| **Lift Locked** | **243** | Up or down button has been pressed while outside the elevator for 10 seconds | Press and hold up or down button for 10 seconds |

## TROUBLESHOOTING TABLE

If you are ever in doubt, please call the service technician.

| PROBLEM | SOLUTION |
|---|---|
| The elevator door fails to open | 1. Ensure that the elevator is in the fully raised position, or in the fully lowered position, by checking the display shows the message "Lift fully up" or "Lift fully down" respectively.<br>2. Press and hold the UP or DOWN button on the control panel to ensure that the full travel of the elevator has been completed. The elevator will automatically stop at the correct position. ***See Figures 2-3 and 2-4.***<br>If the door still won't open, call for help using the onboard alarm or phone. |
| The alarm needs to be turned off | Press the alarm button on the control panel. ***See Figure 2-5.***<br>• A single press of the alarm button will silence the alarm. The display will return to its home screen. |
| The smoke alarm needs to be turned off | Press the alarm button on the remote call station. ***See Figure 2-11.***<br>• A single 1 second press of the alarm button will silence the alarm.<br>• A 5 second press of the alarm button will reset the alarm.<br>The red LED on the smoke detector will turn off and the alarm will sound briefly. The display will return to its home screen. |
| Power failure | If a power failure should occur while the elevator is in motion, the elevator is fitted with an emergency lowering system which allows you to lower the lift. This permits one travel downwards and no upwards travel. This is only active for one hour after power failure.<br>To activate this, simply press and hold the down button on the internal control panel and the lift will begin to descent after 5 seconds. All safety features will operate as normal. ***See Figure 2-4.***<br>We recommend that the elevator remains parked at the lower level until power is restored. |

SECTION 6

# 2-YEAR LIMITED WARRANTY

**PRODUCTS COVERED: POLLOCK RESIDENTIAL ELEVATOR**

Your lift came with a separate warranty page on page 17. You must return that page within ten (10) days of installation to register your lift. This warranty policy page must remain in your Owner's Manual for your records. Do not tear out this page.

Dealer/Installer Name: _____

Address: _____

_____

Phone: _____

E-Mail: _____

If you need service or warranty work, your dealer will require the information below to receive factory information or order parts for your Residential Elevator.

Date Purchased: _____

Serial # of the Lift: _____

**THIS EXPRESS WARRANTY IS IN LIEU OF ALL OTHER WARRANTIES OR CONDITIONS, INCLUDING ALL IMPLIED WARRANTIES OR MERCHANTABILITY OR FITNESS FOR A PARTICULAR PURPOSE, AND THERE ARE NO WARRANTIES THAT EXTEND BEYOND THE DESCRIPTION OF THE LIMITED WARRANTY DESCRIBED HEREIN. THIS WARRANTY GIVES YOU SPECIFIC LEGAL RIGHTS AND YOU MAY ALSO HAVE OTHER LEGAL RIGHTS WHICH VARY FROM STATE TO STATE.**

Harmar Mobility warrants, to the original purchaser of a Pollock Residential Elevator that the device has been manufactured by Harmar to be free of defects in material, mechanical and electrical component (parts), excluding labor costs, and paint, for a period of two (2) years from date of installation, provided that the products have been installed, maintained and operated properly.

This warranty does not cover maintenance or adjustments. Harmar will not be charged for labor, consequential damage, or repair expenses. Harmar will not, under any circumstances, be liable for the loss of the use of its products or loss of time. This warranty becomes null and void if the product has been lost, damaged by accident, over-stressed, misused and/or neglected, or if the product has been modified in any way. Defective parts must be returned, prepaid, to the address provided by Harmar, for inspection prior to credit, repair, or replacement, at Harmar's option. Harmar's sole obligation and the exclusive remedy under this warranty is limited to such credit, repair, or replacement.

**PLEASE FILL OUT ALL FIELDS AND RETURN WITHIN TEN (10) DAYS OF PRODUCT INSTALLATION.**

Fax completed form to 1-866-234-5680 or mail to:
Harmar, ATTN Warranty Department, 1500 Independence Blvd. Suite 220, Sarasota Florida 34234.

## PRODUCT INFORMATION

Model: _____

Serial Number: _____

Purchase Date: _____

Installation Date: _____

## INSTALLER INFORMATION

Company Name: _____

Contact Name: _____

Address: _____

_____

Phone: _____

Fax: _____

Email: _____

## APPLICATION INFORMATION

☐ Scooter ☐ Power Wheelchair

☐ Wheelchair ☐ N/A

Year: _____

Manufacturer: _____

Model: _____

## PURCHASER INFORMATION

Name: _____

Address: _____

_____

Phone: _____

Email: _____

## ADDITIONAL INFORMATION

**How did you hear about Harmar?**

☐ Harmar Dealer

☐ Internet

☐ Magazine
Which: _____

☐ Friend or Acquaintance

☐ Saw Harmar product somewhere

☐ Other: _____

**I purchased my Harmar lift because of:**

☐ Style/Appearance
☐ Harmar Representative
☐ Previous Experience
☐ Ease of Use
☐ Recommendation
☐ Price/Value

Page Intentionally Left Blank

HARMAR®
we lift lives

1500 Independence Blvd., Suite 220
Sarasota, FL 34234
800-833-0478
**www.harmar.com**