INFINITY (60 HZ)
MICRO-6 CONTROLLER (772420)
ELECTRICAL SCHEMATICS

CONTENTS

	PG
Machine Room Terminations Connection Diagram	3
Disconnect Wiring Diagram	4
Disconnect Wiring Diagram by Others	5
Controller Connection Diagram	6
Car Top PCB 772392, Rev. 004 Connection Diagram and LEDs (Auto Fold - Porta 120 VAC Gate Operator)	7
Car Top PCB 772392, Rev. 004 Connection Diagram and LEDs (Auto Fold - Gatemate/Bifold 24 VDC Gate Operator)	8
Car Top PCB 772392, Rev. 004 Connection Diagram and LEDs (for Auto Slim Doors)	9
Landing Connection Diagram	10
Light or Fan Connection Diagram	11
Light Screen Connection Diagram	12
Controller PCB 772420 LEDs and Switches	13
Selector (Tape Reader) PCB 772391 Layout	14
COP Wiring	15
Lock Hook-up - Sheet 1	16
Lock Hook-up - Sheet 2	17
Florida Door Monitoring Wiring Diagram	18
Controller Schematic Symbols	19
Controller PCB 772420 Schematic - Sheet 1 (Hydraulic 3PH)	20
Controller PCB 772420 Schematic - Sheet 1 (Hydraulic 1PH)	21
Controller PCB 772420 Schematic - Sheet 2 (Hydraulic 3PH)	22
Controller PCB 772420 Schematic - Sheet 2 (Hydraulic 1PH)	23
Controller PCB 772420 Schematic - Sheet 3 (Hydraulic 3PH and 1PH)	24
Controller PCB 772420 Schematic - Sheet 4 (Hydraulic 3PH and 1PH)	25
Controller PCB 772420 Schematic - Sheet 5 (Hydraulic 3PH and 1PH)	26
Controller PCB 772420 Schematic - Sheet 6 (Hydraulic 3PH and 1PH - 120 VAC Porta Gate Operator)	27
Controller PCB 772420 Schematic - Sheet 6 (Hydraulic 3PH and 1PH - 24 VDC Gatemate Gate Operator)	28
Controller PCB 772420 Schematic - Sheet 7 (Hydraulic 3PH and 1PH)	29
Controller PCB 772420 Schematic - Sheet 8 (Hydraulic 3PH and 1PH)	30
Valve Controller Omron PLC Version (772048)	31
Door Lock Monitoring (DLM) PCB	32
Door Lock Monitoring (DLM) PCB Wiring	33
Luxury Flush Door Internal Wiring - Remote HC	34
Luxury Flush Door Internal Wiring	35
Luxury Flush Door Internal Wiring - Remote HC - Keyed	36
Luxury Flush Door Internal Wiring - Keyed	37
Luxury Flush Door Connection	38

Part No. 001396, Rev. 012 (Rev 18-m09-2024)

REVISION HISTORY

29-m05-2023	Initial release of manual specific to Infinity with new controller
04-m08-2023	Revised document name on page 1
08-m09-2023	772401 revised to 772420, Page A-12 removed, revised pages A-5, A-13, A18 to A-30
	Added DLM PCB on page A-31
25-m09-2023	Revised page A5 and A24
16-m10-2023	Revised parts number
25-m10-2023	Revised page A-23, A-24, A-26 and A-27
27-m11-2023	Revised pages A-6 to A-8, and A-10
29-m02-2024	Revised pages A-4, added Disconnect Wiring by Others on page A-5
17-m07-2024	Added Luxury Flush Door drawrings on pages 33-35
14-m08-2024	Revised page A-24
21-m08-2024	Revised page A-10
06-m09-2024	Revised page A-34
18-m09-2024	Revised Luxury flush door wiring from pages 34-37, added DLM PCB on page 31



© 2024 Savaria Concord Lifts, Inc.

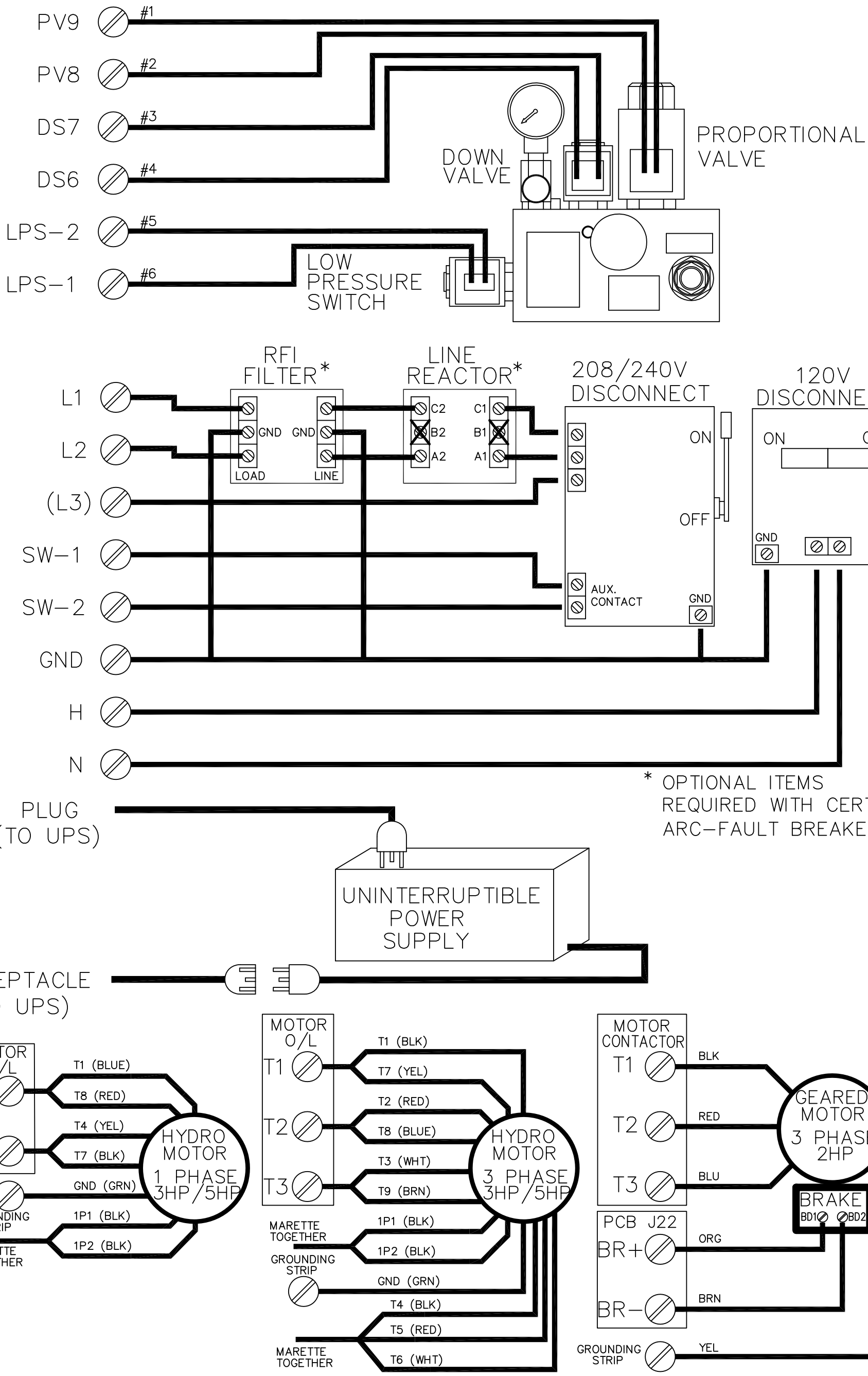

THE INFORMATION DISCLOSED HEREIN IS THE EXCLUSIVE PROPERTY OF savaria AND MAY NOT BE USED BY OTHERS WITHOUT PRIOR WRITTEN CONSENT

UNLESS OTHERWISE SPECIFIED ALL DIMENSIONS ARE IN INCHES. ALL DIMENSIONS IN [] ARE METRIC
TOLERANCES ON:
.X=±0.1 [.X=±3]
.XX=±0.03 [.XX=±0.8]
.XXX=±0.01 [.XXX=±0.25]
ANGLES X =±2.X =±0.5

DO NOT SCALE DRAWING

REMOVE ALL BURRS & SHARP CORNERS

TITLE: EMI–6 CONTROLLER MACHINE ROOM TERMINATIONS CONNECTION DIAGRAM	MATERIAL: N/A	DESIGNED BY:	DESIGN DATE:	SCALE: N/A	REVISION: 003
		DRAWN BY: C. QUIRK	DRAWN DATE: 01/21/11	DRAFTSPERSON: N/A	
	FINISH: N/A	SHEET 1 OF 1	DRAWING NO: EMI–6 MACHINE ROOM		SIZE B

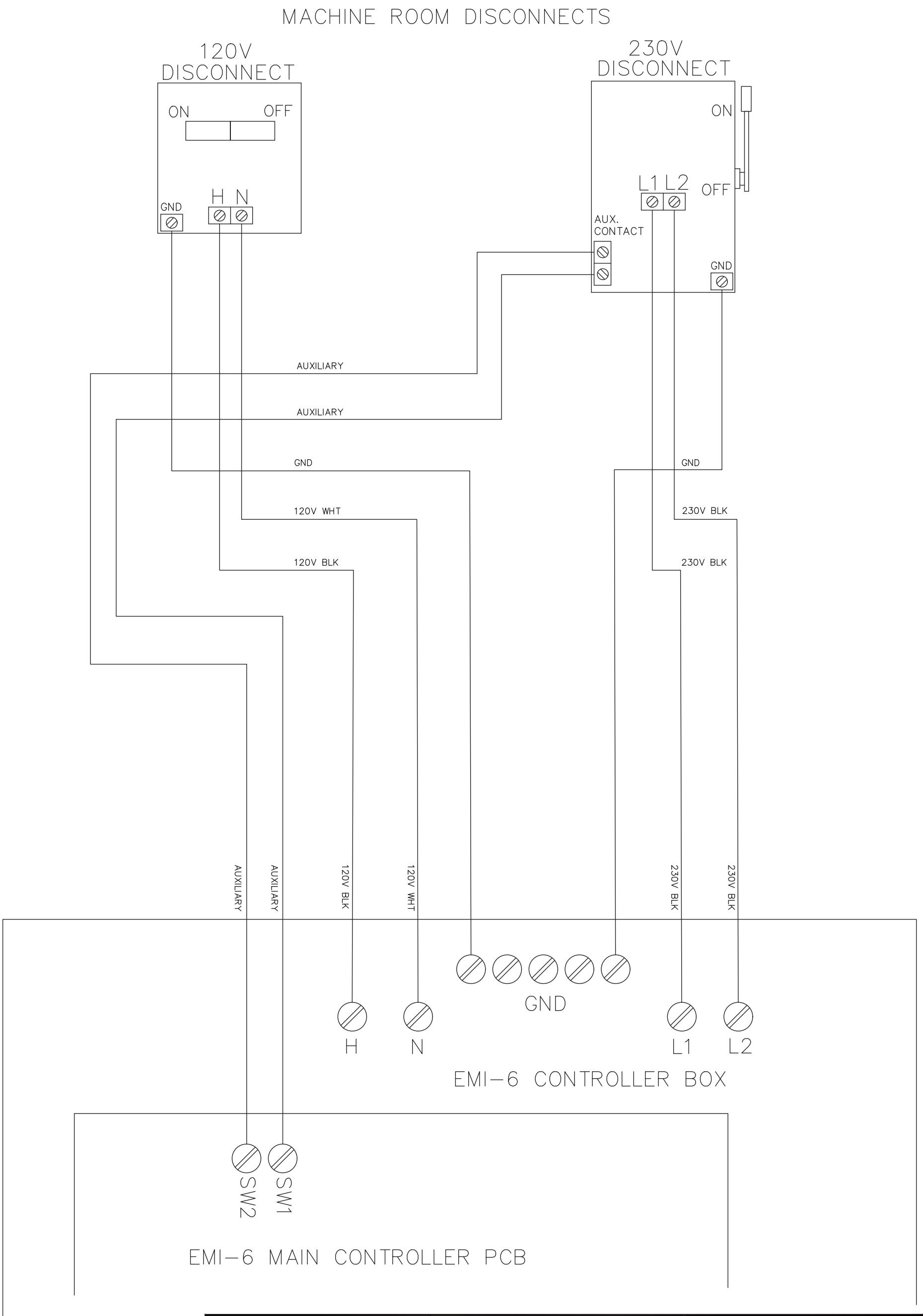

THE INFORMATION DISCLOSED HEREIN IS THE EXCLUSIVE PROPERTY OF savaria™ AND MAY NOT BE USED BY OTHERS WITHOUT PRIOR WRITTEN CONSENT

UNLESS OTHERWISE SPECIFIED ALL DIMENSIONS ARE IN INCHES. ALL DIMENSIONS IN [ ] ARE METRIC
TOLERANCES ON:
.X=±0.1 [.X=±3]
.XX=±0.03 [.XX=±0.8]
.XXX=±0.01 [.XXX=±0.25]
ANGLES X =±2.X =±0.5

DO NOT SCALE DRAWING

REMOVE ALL BURRS & SHARP CORNERS

TITLE:	MATERIAL:	FINISH:
EMI-6 CONTROLLER DISCONNECTS WIRING DIAGRAM	N/A	N/A

DESIGNED BY:	DESIGN DATE:	SCALE:	REVISION:
		N/A	000

DRAWN BY:	DRAWN DATE:	DRAFTSPERSON:	SIZE
HARSUMEET.S	02/27/24	N/A	B

SHEET 1 OF 1

DRAWING NO: EMI-6 DISCONNECTS

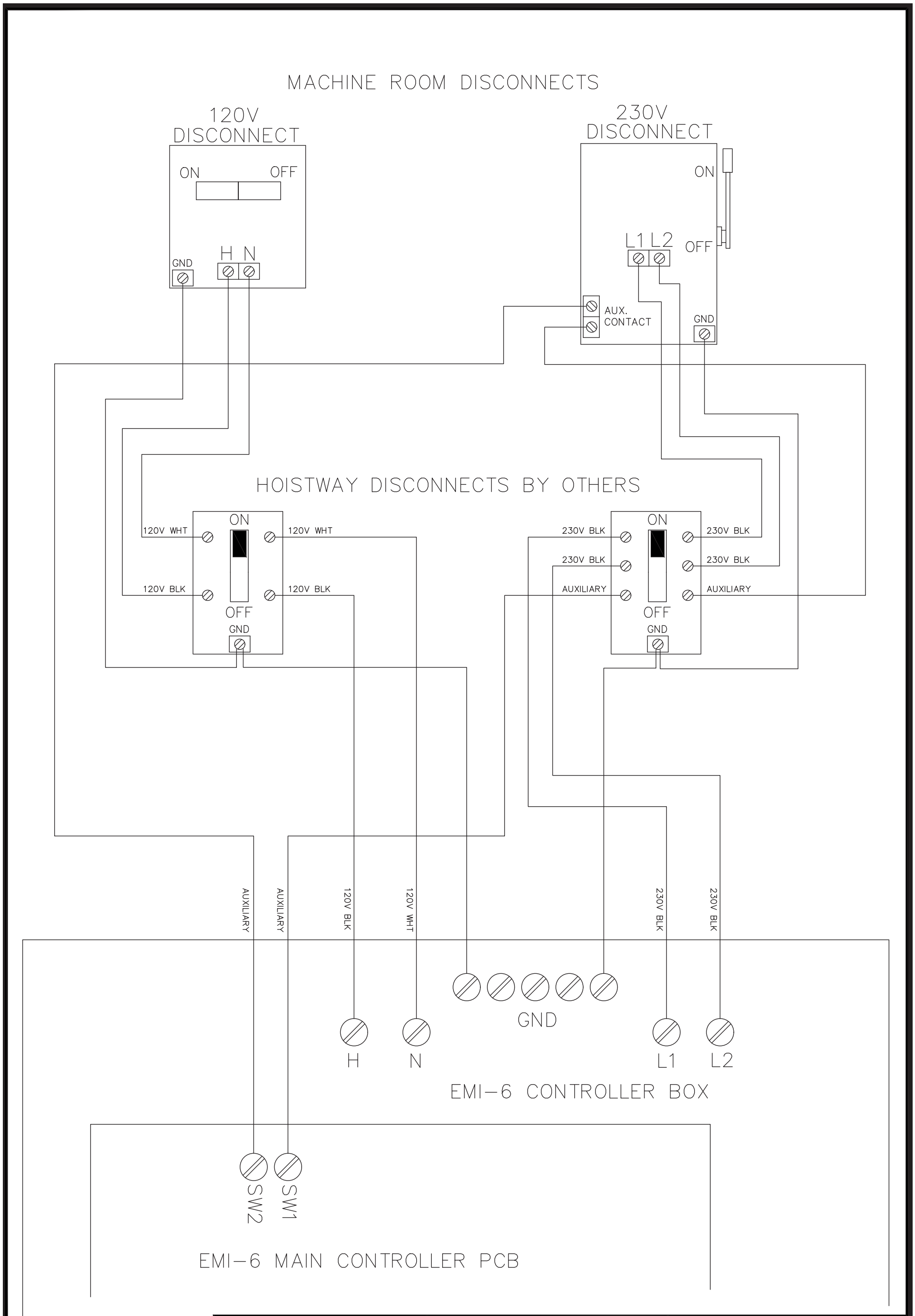

THE INFORMATION DISCLOSED HEREIN IS THE EXCLUSIVE PROPERTY OF savaria™ AND MAY NOT BE USED BY OTHERS WITHOUT PRIOR WRITTEN CONSENT

UNLESS OTHERWISE SPECIFIED ALL DIMENSIONS ARE IN INCHES. ALL DIMENSIONS IN [] ARE METRIC
TOLERANCES ON:
.X=±0.1 [.X=±3]
.XX=±0.03 [.XX=±0.8]
.XXX=±0.01 [.XXX=±0.25]
ANGLES X =±2.X =±0.5

DO NOT SCALE DRAWING

REMOVE ALL BURRS & SHARP CORNERS

TITLE:	MATERIAL:	FINISH:
EMI-6 CONTROLLER DISCONNECTS WIRING DIAGRAM BY OTHERS	N/A	N/A

DESIGNED BY:	DESIGN DATE:	SCALE:	REVISION:
		N/A	000

DRAWN BY:	DRAWN DATE:	DRAFTSPERSON:	SIZE
HARSUMEET.S	02/27/24	N/A	B

SHEET 1 OF 1	DRAWING NO:
	DISCONNECTS BY OTHERS

REVISIONS			
REV	ECO NO.	DATE	REVISED BY
000	C4	12/04/17	1ST RELEASE
001	C4	JUNE 25/19	JS
002	C4	NOV. 29/21	JS
003	ECO1903	JAN. 24/22	KP
004	2126	SEPT. 25/23	HARSUMEET.S

NOTE: Be sure to connect the 14AWG GREEN traveling cable wire to the chassis ground lug!

TO CAR TOP BOX
TCA-WHT
TCA-BLK
FLAT TC
TC-WHT
TC-BLK
ROUND TC

TO AUXILIARY SWITCH IN DISCONNECT

savaria
P/N: 772420 G I
REV 000
S/N
SCTAL8.5 V2.0 *TAL*

J7 24N 24AC
J6 WHT14 BLK14
J5 ALS RP 110N N2 110 SW2 SW1 L N
J4 L1 L2 L2

TO TELEPHONE COMPANY CONNECTION

FLAT TC TCA11-RED TCA12-WHT
ROUND TC TC-PAIR RED TC-PAIR WHT

J8 PH1 PH2
J9 TCRED TCWHT
J30 TC29 TC28 TC27
J10 TC26 TC25 TC24 TC23 DZ TC22 LU TC21 LD TC20 P3 TC19 P2 TC18 P1

TCB20-ORG TC29-BRN
TCB19-ORG TC28-BRN
TCB18-ORG TC27-BRN
TCB17-ORG TC26-BRN
TCB16-ORG TC25-BRN
TCB15-ORG TC24-BRN
TCB14-ORG TC23-BRN
TCB13-ORG TC22-BRN
TCB12-ORG TC21-BRN
TCB11-ORG TC20-ORG
TCB10-YEL TC19-ORG
TCB9-YEL TC18-ORG

TO CAR TOP BOX

(001)
BLK - FL6.4 TO T3001-1 ON VALVE PLC

AL EL RP BK

J28 FL6 HDC HDL 6EL
J27 FL5 DC DL 5EL
J26 FL4 DC DL 4EL

J23 FL1 DC DL 1EL
J24 FL2 DC DL 2EL
J25 FL3 DC DL 3EL

V+ V- TC27 CC PT1 PT2 TC30 GC1 TC31 DO TC32

(002) - REMOVE TC30 AND TCA10-YEL FROM DRAWING. PI SERVICE INDICATOR CCT. (SVC RELAY) REMOVED.

(003) - DO NOT USE TERMINALS TC31 AND TC32.

NOTE: INSTALLER TO WIRE TEMPORARY LOCK JUMPERS ON ALL 6 FLOORS 1-2, 3-4. JUMPERS ARE TO BE REMOVED AS EACH FLOOR IS HOOKED UP AND TESTED. FOR ECLIPSE, REMOVE FL6 JUMPER 3-4 AND WIRE END-OF-TRAVEL SWITCHES HERE.

⚠ WARNING ⚠

FAILURE TO REMOVE TEMPORARY JUMPERS PRIOR TO COMISSIONING THE LIFT MAY RESULT IN SERIOUS INJURY.

TO HALL LANDING STATION POSITION INDICATORS

HALL STATION PI
J11 L- P+ P1 P2 P3

IF NO DLM, INSTALL JUMPER BETWEEN TC31A AND TC31B

J33 TC31B TC31A DC5 DC4 DC3 DC2 DC1 MSC BR+
NOT USED NOT USED NOT USED NOT USED NOT USED NOT USED NOT USED

TEMPORARY RUN BUTTONS J12

TO MOTOR ACCESS DOOR OR TEMP RUN BUTTONS

FLAT TC ROUND TC

TCB8-YEL TC17-ORG
TCB7-YEL TC16-ORG
TCB6-YEL TC15-ORG
TCB5-YEL TC14-ORG
TCB4-YEL TC13-ORG
TCB3-YEL TC12-ORG
TCB2-YEL TC11-ORG
TCB1-YEL TC10-YEL

TCA9-YEL TC9-YEL
TCA8-YEL TC8-YEL
TCA7-YEL TC7-YEL
TCA6-YEL TC6-YEL
TCA5-YEL TC5-YEL
TCA4-YEL TC4-YEL
TCA3-YEL TC3-YEL
TCA2-YEL TC2-YEL
TCA1-YEL TC1-YEL

J13 TC17 6C TC16 5C TC15 4C TC14 3C TC13 2C TC12 1C TC11 TC10 (001)

J14 TC9 DPF TC8 DPR TC7 BZ TC6 UT TC5 LT

J15 TC4 (001) TC3 GC TC2 MSC TC1

J16 MAD2 MAD1

BLK - TC2 TO T3001-2 ON VALVE PLC (001)

J17 PS2 PS1
J18 LPS2 LPS1

GCR HS DN UP

NOTE: TO USE TEMPORARY RUN BUTTONS (001)
CONNECT TEMPORARY JUMPERS BETWEEN: TC4 & TC5, TC4 & TC6, TC6 & TC2, AND MAINTAIN ORIGINAL CONNECTION BETWEEN TC2 & T3001-2 OF VALVE PLC.
FACTORY INSTALLED TEMPORARY JUMPERS: TC10 & TC13, TC13 & TC15, AND TC15 & TC17

⚠ WARNING ⚠

FAILURE TO REMOVE TEMPORARY JUMPERS PRIOR TO COMISSIONING THE LIFT MAY RESULT IN SERIOUS INJURY.

CYCLE POWER VIA THE UPS WHILE HOLDING P-TOOL 1, 5, AND 0 TO ENTER TEMP MODE
PRESS P-TOOL "A" TO MOVE UP SLOW, "A" AND "B" TO MOVE UP FAST
PRESS P-TOOL "D" TO MOVE DOWN SLOW, "D" AND "B" TO MOVE DOWN FAST
TO EXIT TEMPORARY MODE, CYCLE THE POWER
USE THE SAVARIA TEMPORARY RUN BUTTONS AS NORMAL WHILE IN TEMP MODE

J2 WiFi
TO LUT500 WIFI PCB

TO MOTOR ACCESS DOOR
GRY VIO
TO PIT SWITCH
BLK BLU
#5 #6

NOTE: FOR INFINITY, CONNECT JUMPER BETWEEN MAD1 AND MAD2

NOTE: FOR ECLIPSE, LPS1 - LPS2 TURNS ON OPTIONAL CAR TOP INSPECTION STATION. FOR INFINITY, LPS1 - LPS2 IS FOR THE NEGATIVE PRESSURE SWITCH. THE PARAMETER "HYDRAULIC APP" MUST BE TURNED ON (1) BEFORE CONNECTING THESE WIRES.

TO LOW PRESSURE SWITCH (HYDRAULIC)
OR
TO OPTIONAL CAR TOP INSPECTION STATION (ECLIPSE)

DE
J19 DE1 DE2
J20 11 10 9 8 7 6 2 VC
J20 DS6 DS7 PV8 PV9 HSC DN UP
J21 BR+ BR- M14 M13 -V2 +V2
J22

P-TOOL J1

P-TOOL JACK

#4 #3 #2 #1

TO VALVE BLOCK

TO LANDING CALL STATION AND LOCK AND DOOR OPERATOR (ALL LANDINGS WIRED SIMILARLY)
WHT BLK RED GRN BRN BLU ORG YEL VIO GRY PNK TAN

THE INFORMATION DISCLOSED HEREIN IS THE EXCLUSIVE PROPERTY OF savaria™ AND MAY NOT BE USED BY OTHERS WITHOUT PRIOR WRITTEN CONSENT

UNLESS OTHERWISE SPECIFIED ALL DIMENSIONS ARE IN INCHES. ALL DIMENSIONS IN [] ARE METRIC
TOLERANCES ON:
.X=±0.1 [.X=±3]
.XX=±0.03 [.XX=±0.8]
.XXX=±0.01 [.XXX=±0.25]
ANGLES X =±2.X =±0.5

DO NOT SCALE DRAWING
REMOVE ALL BURRS & SHARP CORNERS

DESIGNED BY:	DESIGN DATE:	SCALE: N/A	REVISION: 004
MATERIAL: N/A	DRAWN BY: C. QUIRK	DRAWN DATE: 12/04/17	DRAFTSPERSON: N/A
FINISH: N/A	SHEET 1 OF 1	DRAWING NO: EMI-6 CONTROLLER-SCTAL-8.5	SIZE B

TITLE: EMI-6 CONTROLLER MAIN CONTROLLER CONNECTION DIAGRAM (INF)

AUTO PANEL FOLD
(Porta 120 Vac Gate Operator)

LED	Description
LED1	Selector P1 positioning input indicator
LED2	Selector P2 positioning input indicator
LED3	Selector P3 positioning input indicator
LED4	Selector DL (down levelling) input indicator
LED5	Selector UL (up levelling) input indicator
LED6	Selector DZ (door zone) input indicator
LED7	Selector POWER (+24V) indicator

REVISIONS

REV	ECO NO.	DATE	REVISED BY
000	C4	01/18/11	1ST RELEASE
001	C4	03/15/12	CQ
004	C4	05/22/14	CQ
005	C4	10/27/14	CQ
006	C4	12/17/15	CQ
008	C4	04/18/18	CQ
009	C4	04/20/18	JS
010	C4	JUNE 25/19	JS
011	RI1414	NOV. 18/21	JS
012	2126	NOV. 27/23	H.S

IMPORTANT!
Confirm voltage of gate operator
before changing any car top wiring.

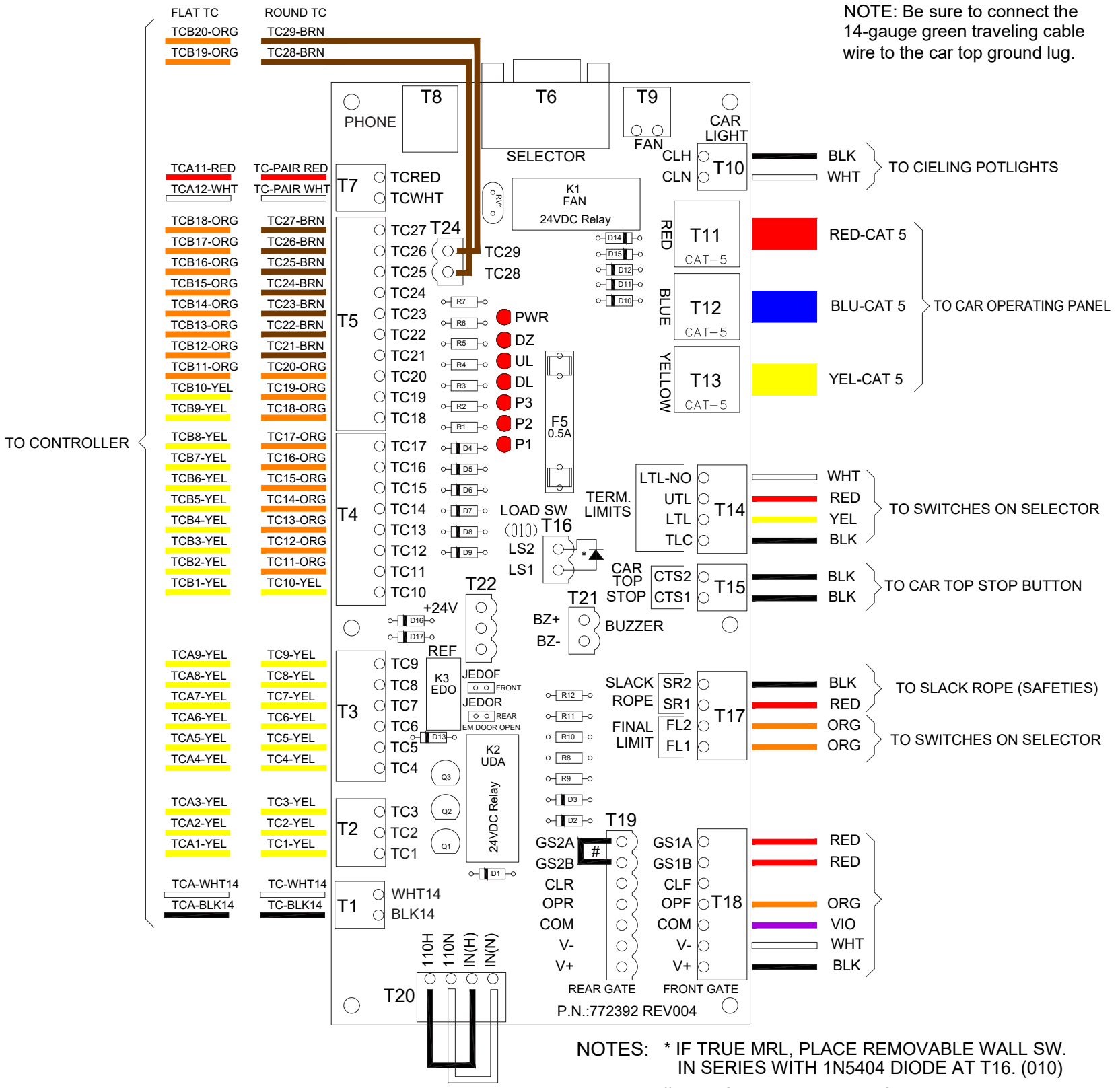

NOTE: Be sure to connect the 14-gauge green traveling cable wire to the car top ground lug.

NOTES: * IF TRUE MRL, PLACE REMOVABLE WALL SW. IN SERIES WITH 1N5404 DIODE AT T16. (010)

REMOVE JUMPER FROM T19 IF REAR GATE OPERATOR IS REQUIRED

(011) NOTE: PI SERVICE INDICATOR CIRCUIT (SVC RELAY) REMOVED.

THE INFORMATION DISCLOSED HEREIN IS THE EXCLUSIVE PROPERTY OF savaria™ AND MAY NOT BE USED BY OTHERS WITHOUT PRIOR WRITTEN CONSENT

UNLESS OTHERWISE SPECIFIED ALL DIMENSIONS ARE IN INCHES. ALL DIMENSIONS IN [] ARE METRIC
TOLERANCES ON:
.X=±0.1 [.X=±3]
.XX=±0.03 [.XX=±0.8]
.XXX=±0.01 [.XXX=±0.25]
ANGLES X =±2.X =±0.5

DO NOT SCALE DRAWING | REMOVE ALL BURRS & SHARP CORNERS

DESIGNED BY:	DESIGN DATE:	SCALE: N/A	REVISION: 012
DRAWN BY: C. QUIRK	DRAWN DATE: 01/18/11	DRAFTSPERSON: N/A	
MATERIAL: N/A			SIZE B
FINISH: N/A	SHEET 1 OF 1	DRAWING NO: EMI-6 CAR TOP	

TITLE: EMI-6 CONTROLLER CAR TOP BOX-MANUAL CONNECTION DIAGRAM

AUTO PANEL FOLD
(Gatemate and Bifold 24 Vdc Gate Operator)

LED	Description
LED1	Selector P1 positioning input indicator
LED2	Selector P2 positioning input indicator
LED3	Selector P3 positioning input indicator
LED4	Selector DL (down levelling) input indicator
LED5	Selector UL (up levelling) input indicator
LED6	Selector DZ (door zone) input indicator
LED7	Selector POWER (+24V) indicator

REVISIONS			
REV	ECO NO.	DATE	REVISED BY
000	C4	01/18/11	1ST RELEASE
001	C4	03/15/12	CQ
004	C4	05/22/14	CQ
005	C4	10/27/14	CQ
006	C4	12/17/15	CQ
007	C4	10/20/16	CQ
008	C4	04/18/18	CQ
009	C4	04/20/18	JS
010	C4	JUNE 25/19	JS
011	RI1414	NOV. 18/21	JS
012	2126	NOV. 27/23	H.S

IMPORTANT!
Confirm voltage of gate operator
before changing any car top wiring.

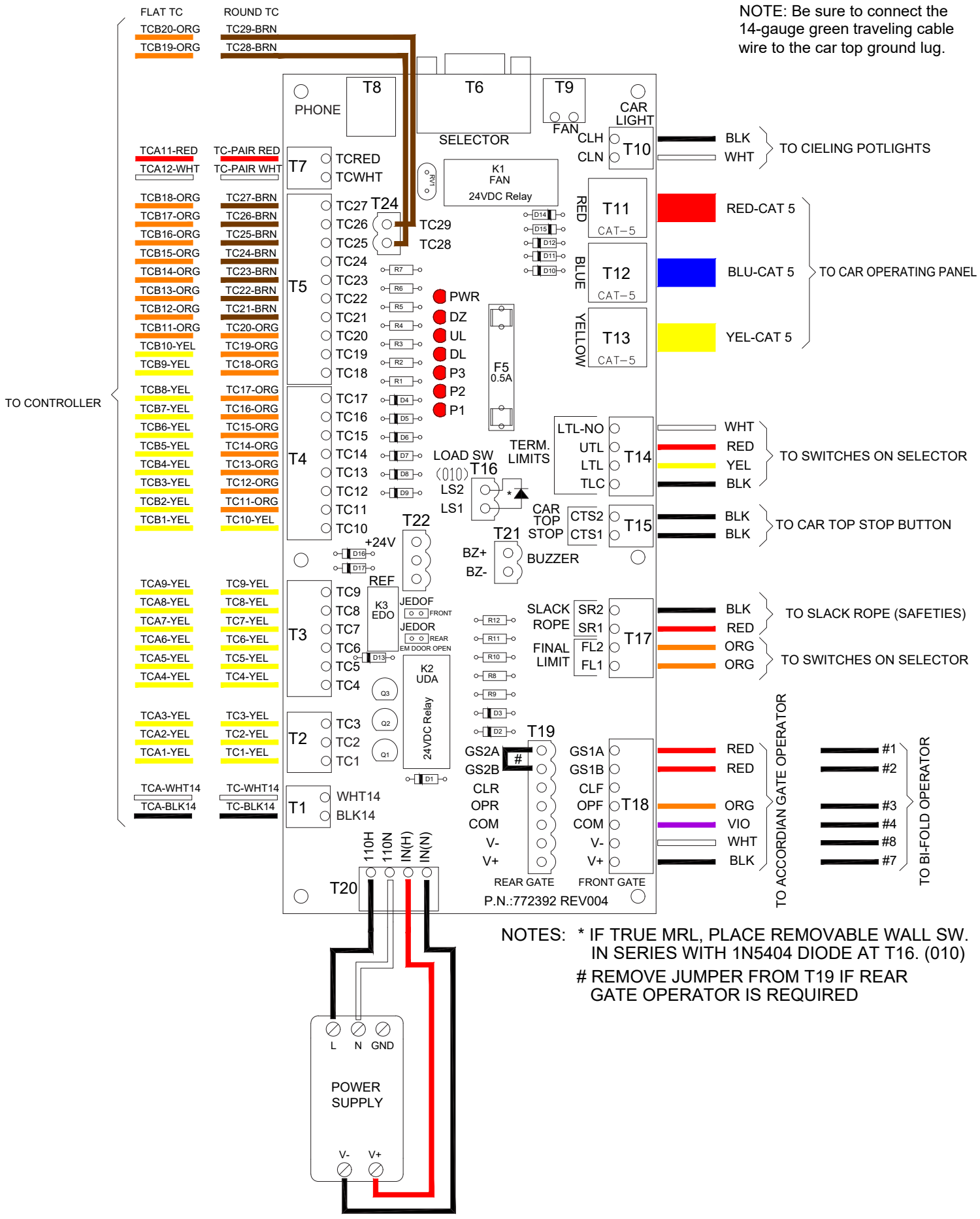

NOTES: * IF TRUE MRL, PLACE REMOVABLE WALL SW. IN SERIES WITH 1N5404 DIODE AT T16. (010)
REMOVE JUMPER FROM T19 IF REAR GATE OPERATOR IS REQUIRED

(011) NOTE: PI SERVICE INDICATOR CIRCUIT (SVC RELAY) REMOVED.

THE INFORMATION DISCLOSED HEREIN IS THE EXCLUSIVE PROPERTY OF savaria™ AND MAY NOT BE USED BY OTHERS WITHOUT PRIOR WRITTEN CONSENT

TITLE: EMI-6 CONTROLLER CAR TOP BOX-AUTOMATIC CONNECTION DIAGRAM

UNLESS OTHERWISE SPECIFIED ALL DIMENSIONS ARE IN INCHES. ALL DIMENSIONS IN [] ARE METRIC
TOLERANCES ON:
.X=±0.1 [.X=±3]
.XX=±0.03 [.XX=±0.8]
.XXX=±0.01 [.XXX=±0.25]
ANGLES X =±2.X =±0.5

MATERIAL: N/A
FINISH: N/A

DO NOT SCALE DRAWING
REMOVE ALL BURRS & SHARP CORNERS

DESIGNED BY:	DESIGN DATE:	SCALE:	REVISION:
		N/A	012
DRAWN BY:	DRAWN DATE:	DRAFTSPERSON:	
C. QUIRK	01/18/11	N/A	
SHEET 1 OF 1	DRAWING NO: EMI-6 CAR TOP		SIZE B

AUTO SLIM DOORS & TWO-SPEED DOORS

REVISIONS			
REV	ECO NO.	DATE	REVISED BY
000	C4	05/22/14	1ST RELEASE
002	C4	JUNE 25/19	JS
003	2126	NOV. 27/23	H.S

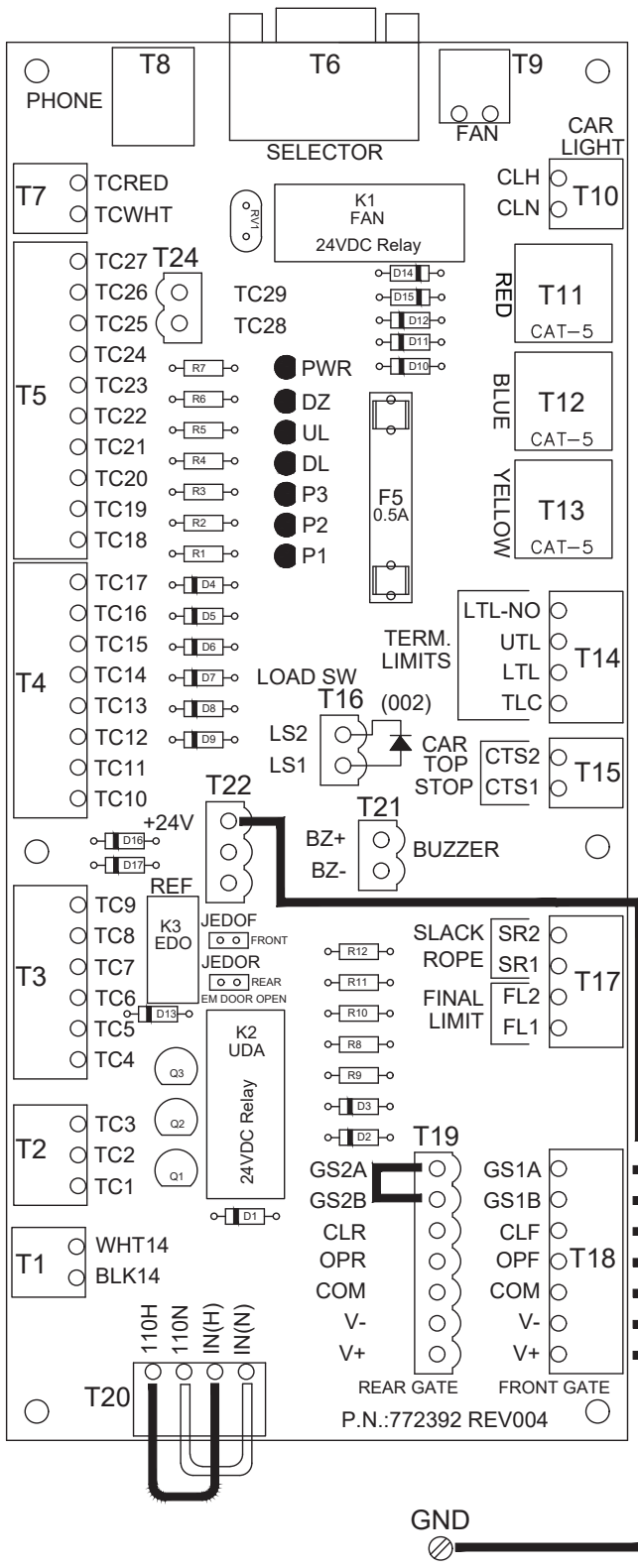

LED	Description
LED1	Selector P1 positioning input indicator
LED2	Selector P2 positioning input indicator
LED3	Selector P3 positioning input indicator
LED4	Selector DL (down levelling) input indicator
LED5	Selector UL (up levelling) input indicator
LED6	Selector DZ (door zone) input indicator
LED7	SELECTOR POWER (+24V) indicator

NOTES: TO ENABLE EMERGENCY DOOR OPEN (IN CASE THE CAR IS ENTERED WITHOUT A KEY) PLACE A JUMPER SHUNT ON JEDOF FOR THE FRONT DOOR AND JEDOR FOR THE REAR DOOR.

THIS WILL CAUSE THE ALARM BUTTON TO GENERATE A DOOR OPEN SIGNAL.

THE INFORMATION DISCLOSED HEREIN IS THE EXCLUSIVE PROPERTY OF savaria™ AND MAY NOT BE USED BY OTHERS WITHOUT PRIOR WRITTEN CONSENT

UNLESS OTHERWISE SPECIFIED ALL DIMENSIONS ARE IN INCHES. ALL DIMENSIONS IN [] ARE METRIC
TOLERANCES ON:
.X=±0.1 [.X=±3]
.XX=±0.03 [.XX=±0.8]
.XXX=±0.01 [.XXX=±0.25]
ANGLES X =±2.X =±0.5

DO NOT SCALE DRAWING

REMOVE ALL BURRS & SHARP CORNERS

DESIGNED BY:	DESIGN DATE:	SCALE:	REVISION:
		N/A	003

MATERIAL:	DRAWN BY:	DRAWN DATE:	DRAFTSPERSON:
N/A	C. QUIRK	05/22/14	N/A

FINISH:	SHEET 1 OF 1	DRAWING NO:	SIZE
N/A		EMI–6 AUTO SLIM DOORS	B

TITLE: EMI–6 CONTROLLER AUTO SLIM DOORS CONNECTION DIAGRAM

REVISIONS			
REV	ECO NO.	DATE	REVISED BY
008	C4	05/14/18	JS
009	C4	08/17/21	JS

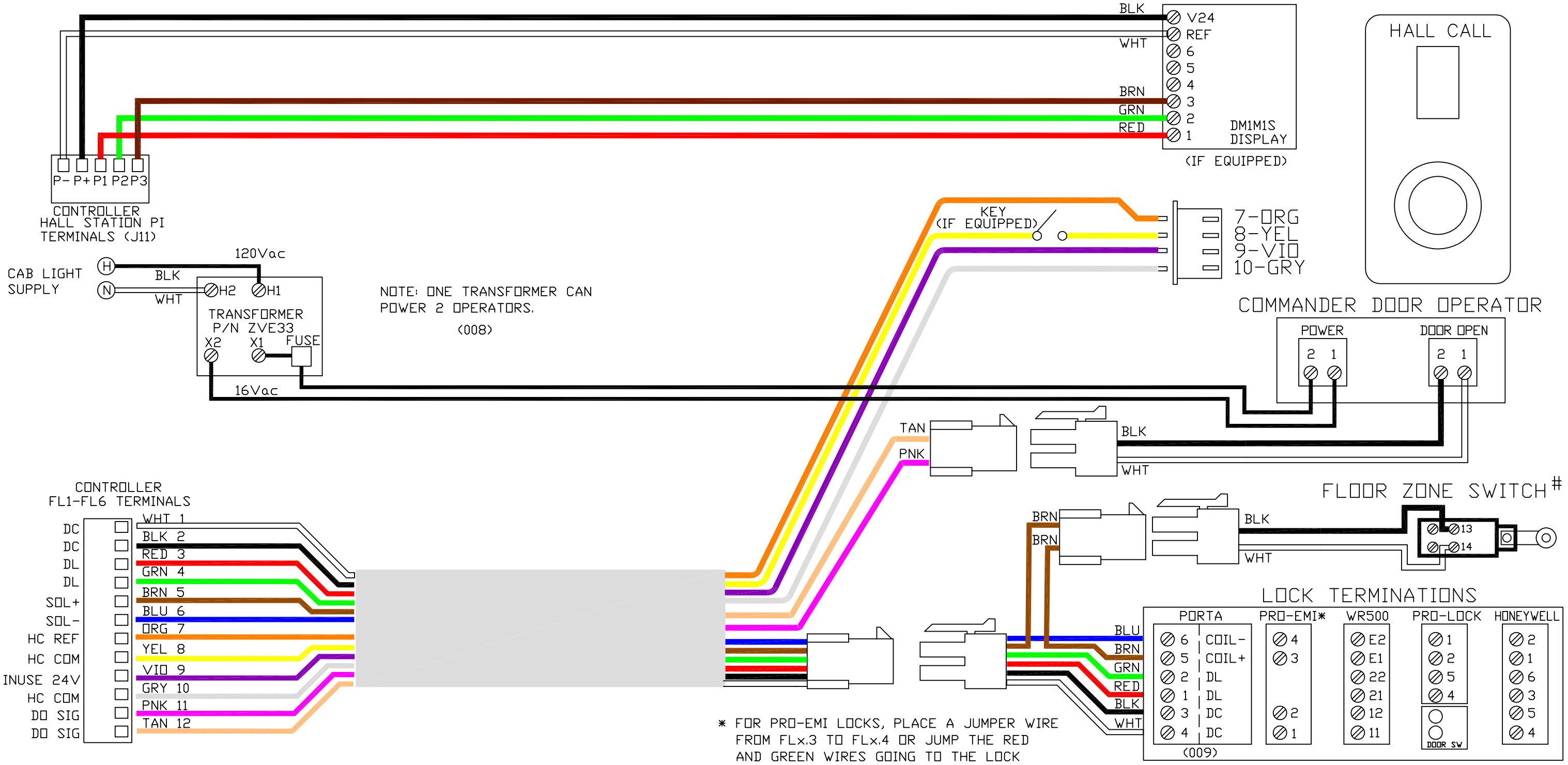

* FOR PRO-EMI LOCKS, PLACE A JUMPER WIRE FROM FLx.3 TO FLx.4 OR JUMP THE RED AND GREEN WIRES GOING TO THE LOCK

\# FLOOR ZONE SWITCHES

1. MANDATORY WHEN USING ANY ELECTRIC LOCKS.
2. N.O. SWITCH CONTACT ACTIVATED BY A CAM MOUNTED ON THE CAR SLING.
3. NOT REQUIRED IF AUTO-SLIM DOORS ARE IN USE.

THE INFORMATION DISCLOSED HEREIN IS THE EXCLUSIVE PROPERTY OF savaria™ AND MAY NOT BE USED BY OTHERS WITHOUT PRIOR WRITTEN CONSENT

TITLE: EMI-6 CONTROLLER LANDING CONNECTIONS DIAGRAM

UNLESS OTHERWISE SPECIFIED ALL DIMENSIONS ARE IN INCHES. ALL DIMENSIONS IN [] ARE METRIC
TOLERANCES ON:
.X=±0.1 [.X=±3]
.XX=±0.03 [.XX=±0.8]
.XXX=±0.01 [.XXX=±0.25]
ANGLES X =±2.X =±0.5

MATERIAL: N/A

FINISH: N/A

DO NOT SCALE DRAWING

REMOVE ALL BURRS & SHARP CORNERS

DESIGNED BY:	DESIGN DATE:	SCALE:	REVISION:
		N/A	009
DRAWN BY:	DRAWN DATE:	DRAFTSPERSON:	
C. QUIRK	01/10/11	N/A	
SHEET 1 OF 1	DRAWING NO: EMI-6 LANDING		SIZE B

REVISIONS			
REV	ECO NO.	DATE	REVISED BY
000	C4	11/12/12	1ST RELEASE
001	C4	05/22/14	C.Q.
002	C4	11/03/15	C.Q.
003	C4	05/02/16	C.Q.
004	C4	JUNE 25/19	JS
005	2126	NOV. 27/23	H.S

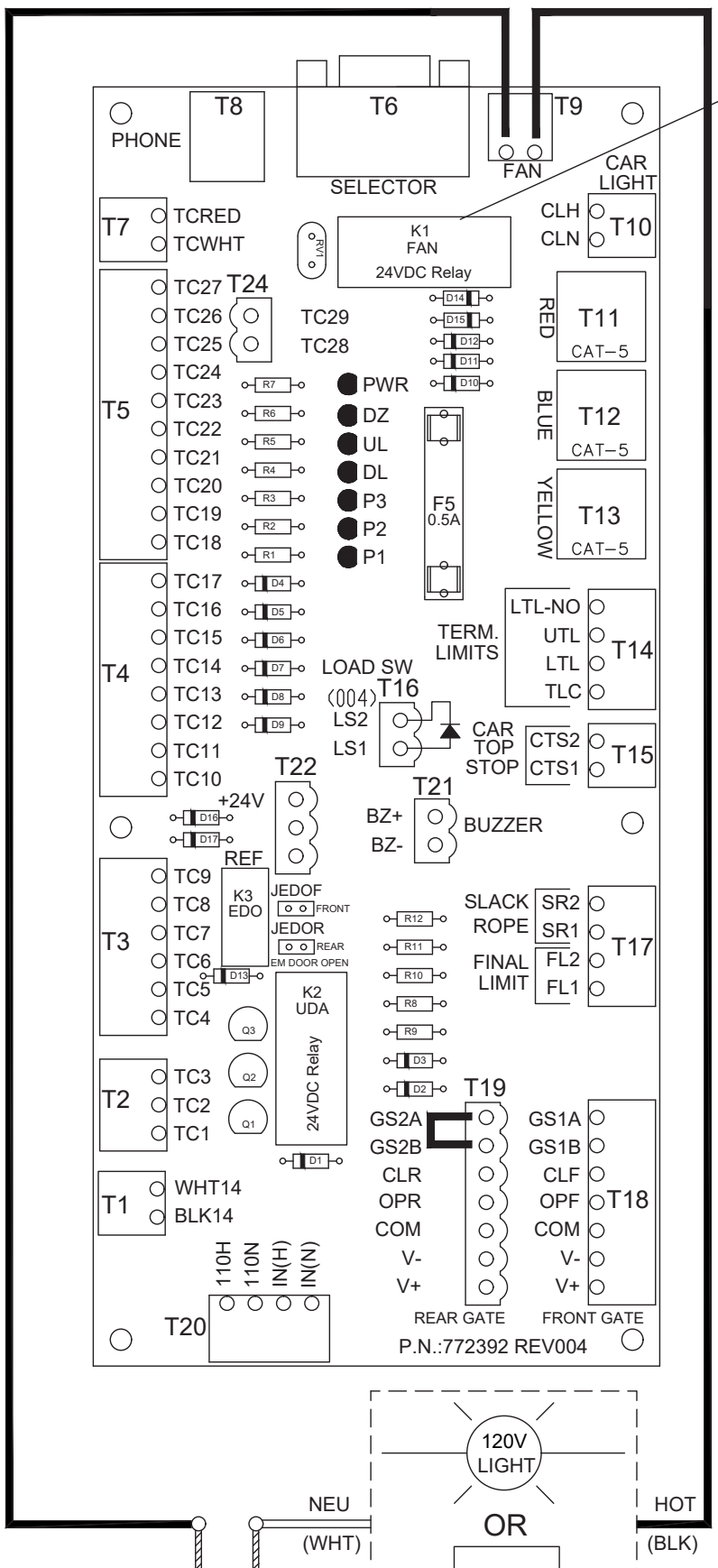

THE INFORMATION DISCLOSED HEREIN IS THE EXCLUSIVE PROPERTY OF savaria™ AND MAY NOT BE USED BY OTHERS WITHOUT PRIOR WRITTEN CONSENT

TITLE: EMI-6 CONTROLLER 120V FAN OR LIGHT CONNECTION DIAGRAM

UNLESS OTHERWISE SPECIFIED ALL DIMENSIONS ARE IN INCHES. ALL DIMENSIONS IN [] ARE METRIC
TOLERANCES ON:
.X=±0.1 [.X=±3]
.XX=±0.03 [.XX=±0.8]
.XXX=±0.01 [.XXX=±0.25]
ANGLES X =±2.X =±0.5

DO NOT SCALE DRAWING | REMOVE ALL BURRS & SHARP CORNERS

DESIGNED BY:	DESIGN DATE:	SCALE:	REVISION:
		N/A	005
MATERIAL: N/A	DRAWN BY: C. QUIRK	DRAWN DATE: 11/12/12	DRAFTSPERSON: N/A
FINISH: N/A	SHEET 1 OF 1	DRAWING NO: EMI-6 FAN-LIGHT	SIZE B

REVISIONS			
REV	ECO NO.	DATE	REVISED BY
000	C4	10/20/14	1ST RELEASE

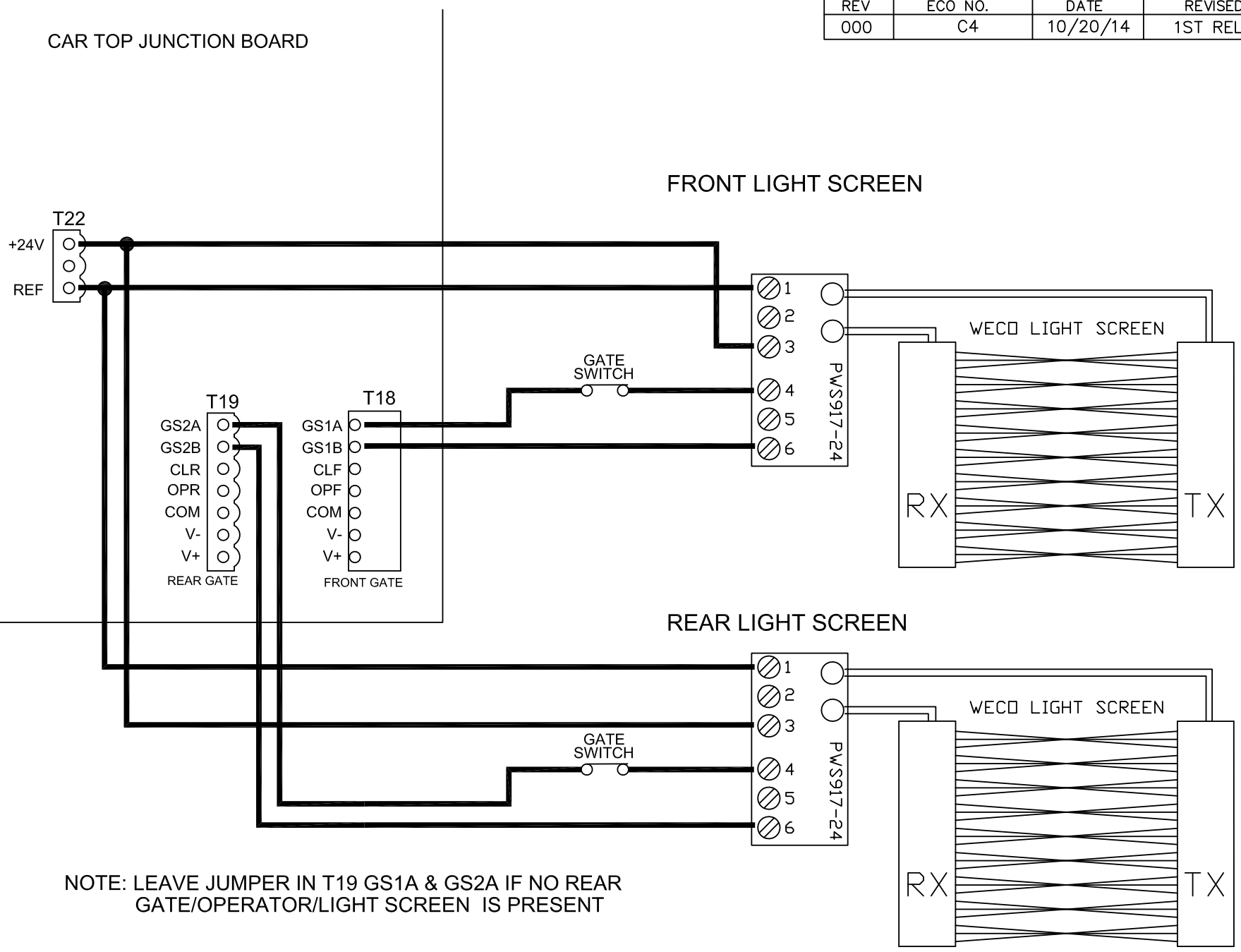

NOTE: LEAVE JUMPER IN T19 GS1A & GS2A IF NO REAR GATE/OPERATOR/LIGHT SCREEN IS PRESENT

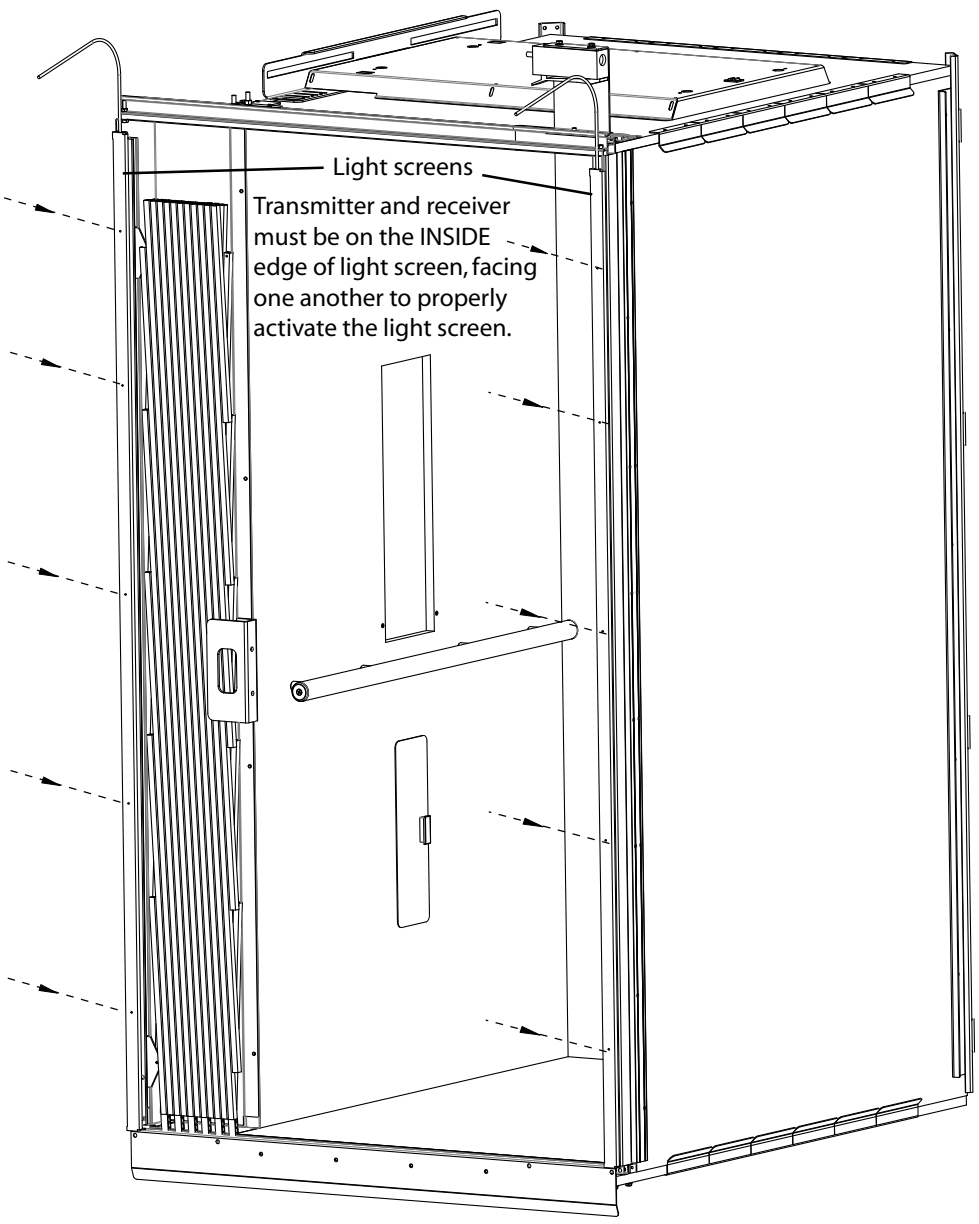

NOTES

1. You must install the light screens on the cab BEFORE building the cab.
2. Before attaching the light screens, you must determine which is the ACTIVE side and which is the DEAD side. If you slide your hand along the edge of the active side, you can feel the transmitter/receiver in the groove of the light screen. The groove on the other side is empty.
3. It is critical that the light screen transmitter and receiver are pointed directly at one another, facing one another so the light screen will activate properly.

FOR INFINITY
WITH WOOD CAB

THE INFORMATION DISCLOSED HEREIN IS THE EXCLUSIVE PROPERTY OF savaria™ AND MAY NOT BE USED BY OTHERS WITHOUT PRIOR WRITTEN CONSENT

TITLE: EMI–6 CONTROLLER LIGHT SCREEN CONNECTION DIAGRAM	UNLESS OTHERWISE SPECIFIED ALL DIMENSIONS ARE IN INCHES. ALL DIMENSIONS IN [] ARE METRIC TOLERANCES ON: .X=±0.1 [.X=±3] .XX=±0.03 [.XX=±0.8] .XXX=±0.01 [.XXX=±0.25] ANGLES X =±2.X =±0.5	DO NOT SCALE DRAWING	REMOVE ALL BURRS & SHARP CORNERS	
		DESIGNED BY:	DESIGN DATE:	SCALE: N/A / REVISION: 000
	MATERIAL: N/A	DRAWN BY: C. QUIRK	DRAWN DATE: 10/20/14	DRAFTSPERSON: N/A
	FINISH: N/A	SHEET 1 OF 1	DRAWING NO: EMI–6 LIGHT SCREENS	SIZE B

Controller PCB (P/N 772420) LEDs and Switches

LED	Description
DZ	Selector door zone indicator
UL	Selector up levelling indicator
DL	Selector down levelling indicator
P3	Selector P3 positioning (binary) indicator
P2	Selector P2 positioning (binary) indicator
P1	Selector P1 positioning (binary) indicator
AL	Cab lighting indicator
EL	Emergency light indicator
RP	Run pilot indicator
DC2	Fuse 2 status indicator
DC3	Fuse 3 status indicator
DC4	Fuse 4 status indicator
PT2	Overload/VFD status input indicator
CC	Motor auxiliary input indicator
TC27NLD	reset confirmation indicator
1EL - 6EL	Electric lock output indicators
DC	Doors closed contacts input indicator
DL	Doors locked contacts input indicator
HDC	All doors closed input indicator
HDL	All doors locked input indicator
1C	Floor 1 call input indicator
2C	Floor 2 call input indicator
3C	Floor 3 call input indicator
4C	Floor 4 call input indicator
5C	Floor 5 call input indicator
6C	Floor 6 call input indicator
OPF	Door open front input indicator
OPR	Door open rear input indicator
BZ	Buzzer output indicator
UT	Normal limit up input indicator
LT	Normal limit down input indicator
GC	Gates closed input indicator
MSC	Main safety chain input indicator
LPS1	Low pressure switch input indicator (Hydraulic)
	Optional car top inspection indicator (Eclipse only)
DE	Drive enable indicator
LE	Levelling indicator
HS	High speed indicator
DN	Down direction indicator
UP	Up direction indicator
OK	Watchdog input indicator
BK	Brake Relay Indicator
GCR	Gates closed relay indicator
GC1	Gate 1 closed indicator
DO	Door Open button indicator

Switch	Description
SW1	Set to GEAR for geared controller
	Set to HYDRO for hydraulic controller

Selector PCB (P/N 772391) Layout

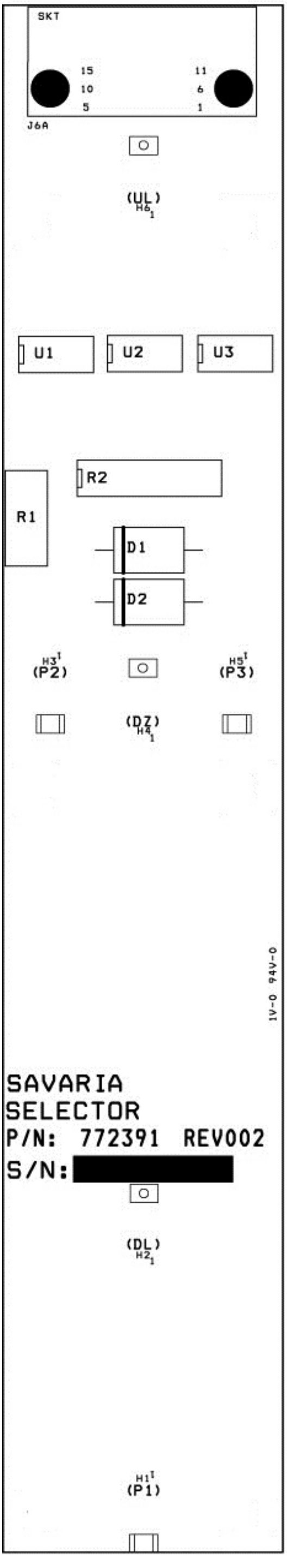

Sensor Spacing

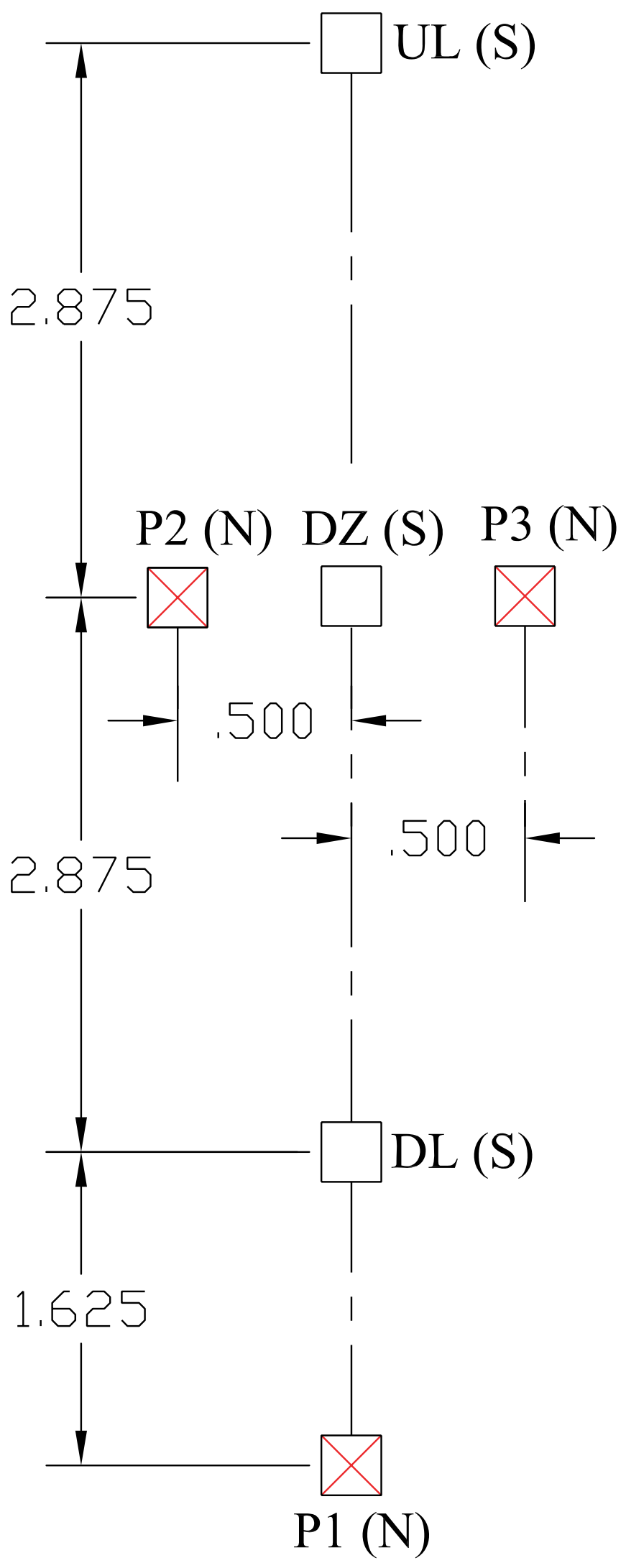

In the illustration above:
P1 = Positioning binary 1's lane
P2 = Positioning binary 2's lane
P3 = Positioning binary 4's lane

REVISIONS			
REV	ECO NO.	DATE	REVISED BY
000	N/A	03/04/15	1ST RELEASE

EMI-6 CAR OPERATING PANEL 4-STOP

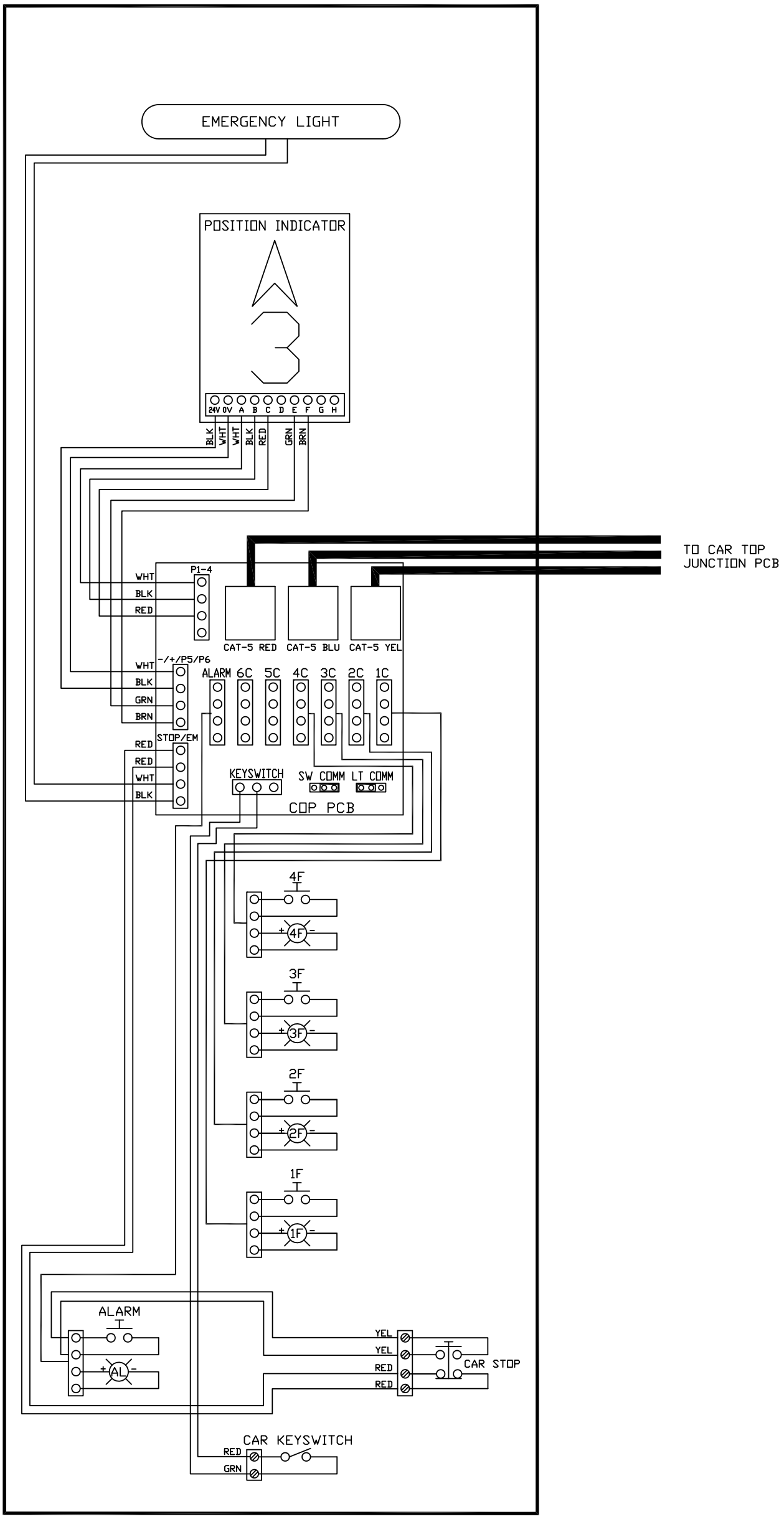

THE INFORMATION DISCLOSED HEREIN IS THE EXCLUSIVE PROPERTY OF savaria™ AND MAY NOT BE USED BY OTHERS WITHOUT PRIOR WRITTEN CONSENT	UNLESS OTHERWISE SPECIFIED ALL DIMENSIONS ARE IN INCHES. ALL DIMENSIONS IN [] ARE METRIC TOLERANCES ON: .X=±0.1 [.X=±3] .XX=±0.03 [.XX=±0.8] .XXX=±0.01 [.XXX=±0.25] ANGLES X =±2.X =±0.5	DO NOT SCALE DRAWING	REMOVE ALL BURRS & SHARP CORNERS
TITLE: EMI-6 CONTROLLER COP WIRING DIAGRAM	MATERIAL: N/A	DESIGNED BY:	DESIGN DATE:
		DRAWN BY: C. QUIRK	DRAWN DATE: 03/04/15
	FINISH: N/A	SHEET 1 OF 1	DRAWING NO: EMI-6 COP

SCALE:	REVISION:
N/A	000
DRAFTSPERSON: N/A	SIZE B

WR500 LOCK CONNECTIONS

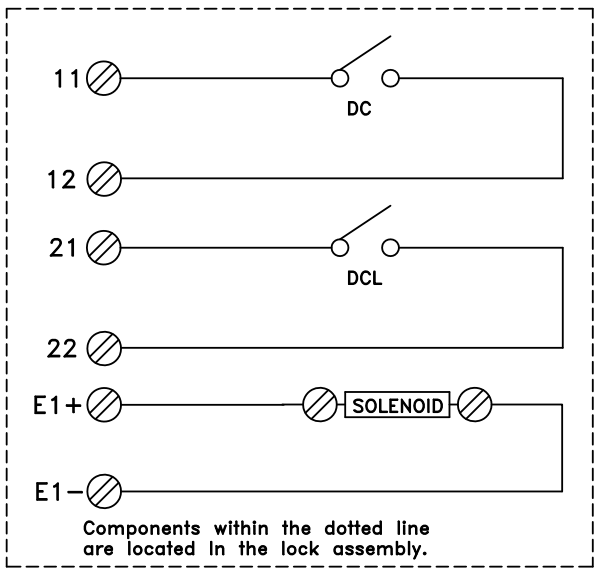

11– 12– DOOR CLOSED CONTACTS
21– 22– DOOR CLOSED/LOCKED CONTACTS
E1– LOCK SOLENOID +
E2– LOCK SOLENOID –

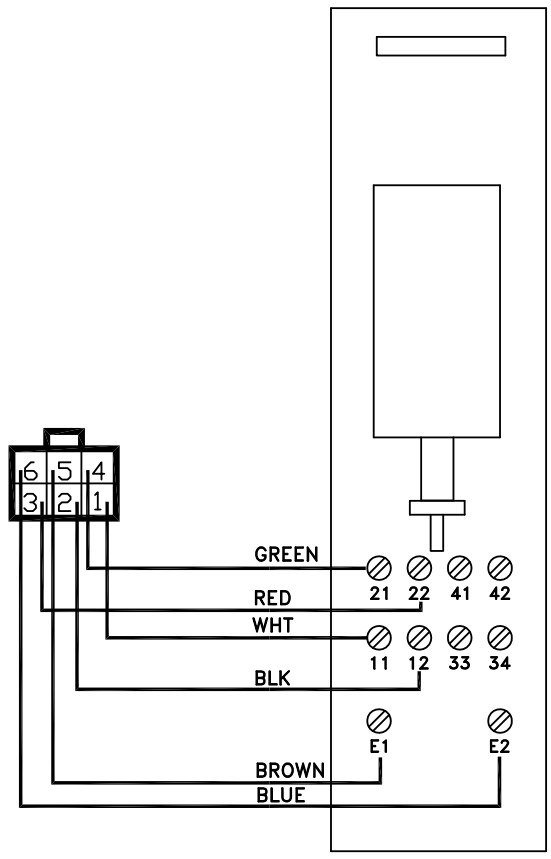

PRO–E.M.I. LOCK CONNECTIONS

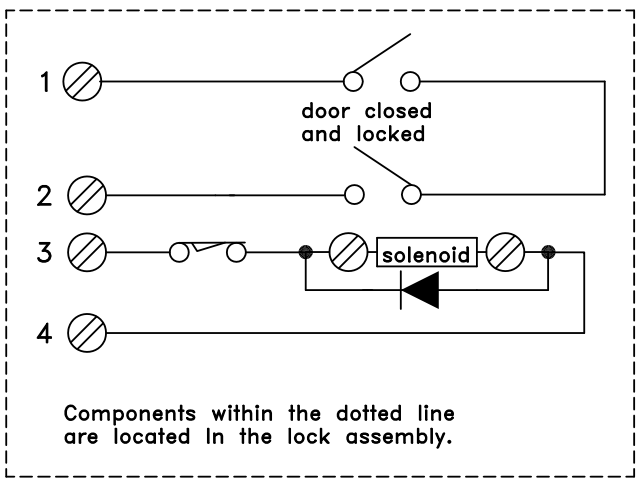

1– 2– DOOR CLOSED/LOCKED CONTACTS
3– LOCK SOLENOID +
4– LOCK SOLENOID –

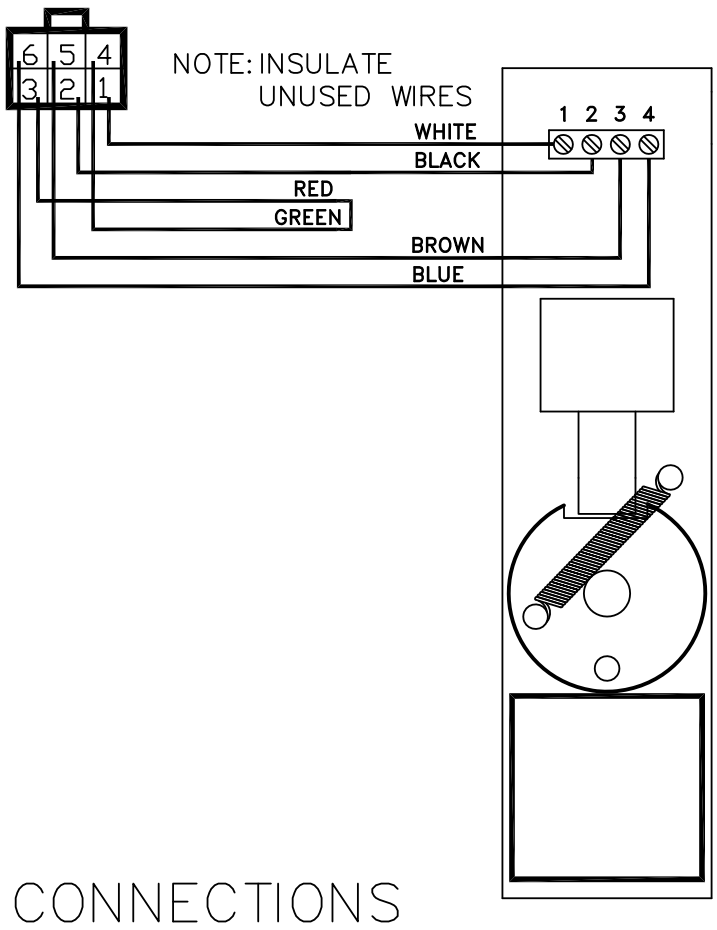

PORTA LOCK CONNECTIONS

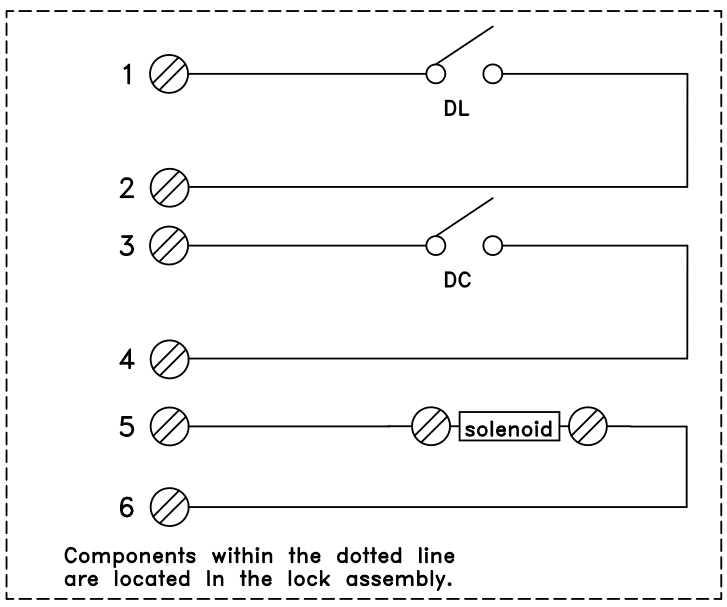

1– 2– DOOR LOCKED CONTACTS
3– 4– DOOR CLOSED CONTACTS
5– LOCK SOLENOID +
6– LOCK SOLENOID –

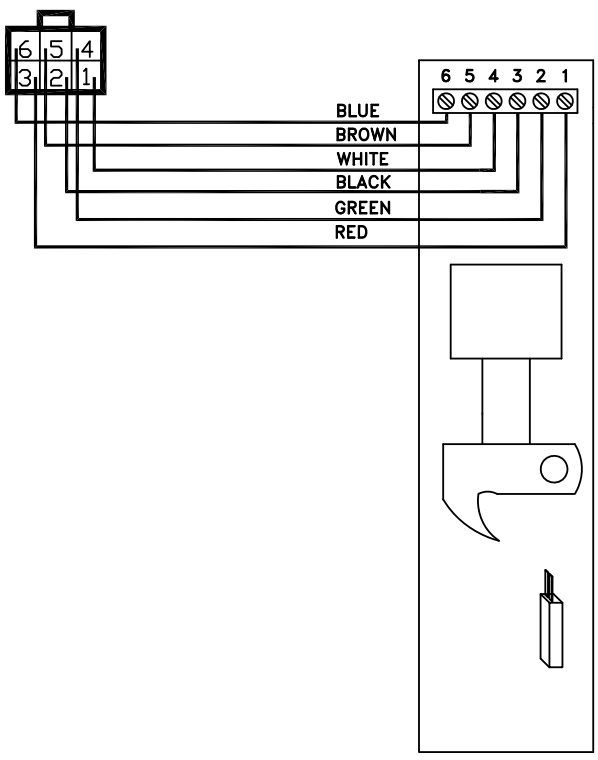

THE INFORMATION DISCLOSED HEREIN IS THE EXCLUSIVE PROPERTY OF savaria.
AND MAY NOT BE USED BY OTHERS WITHOUT PRIOR WRITTEN CONSENT

UNLESS OTHERWISE SPECIFIED ALL DIMENSIONS ARE IN INCHES. ALL DIMENSIONS IN [ ] ARE METRIC
TOLERANCES ON:
.X=±0.1 [.X=±3]
.XX=±0.03 [.XX=±0.8]
.XXX=±0.01 [.XXX=±0.25]
ANGLES X =±2.X =±0.5

DO NOT SCALE DRAWING | REMOVE ALL BURRS & SHARP CORNERS

DESIGNED BY:	DESIGN DATE:	SCALE:	REVISION:
		N/A	006

MATERIAL:	DRAWN BY:	DRAWN DATE:	DRAFTSPERSON:
N/A	JS	MAR. 10/08	N/A

FINISH:	SHEET 1 OF 2	DRAWING NO:	SIZE
N/A		LOCK_HOOK	B

TITLE: EMI–6 CONTROLLER LOCK HOOK–UP DIAGRAMS

HONEYWELL LOCK CONNECTIONS

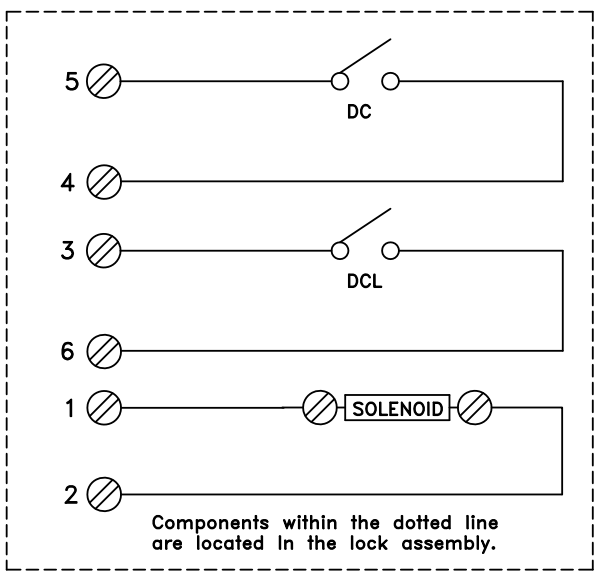

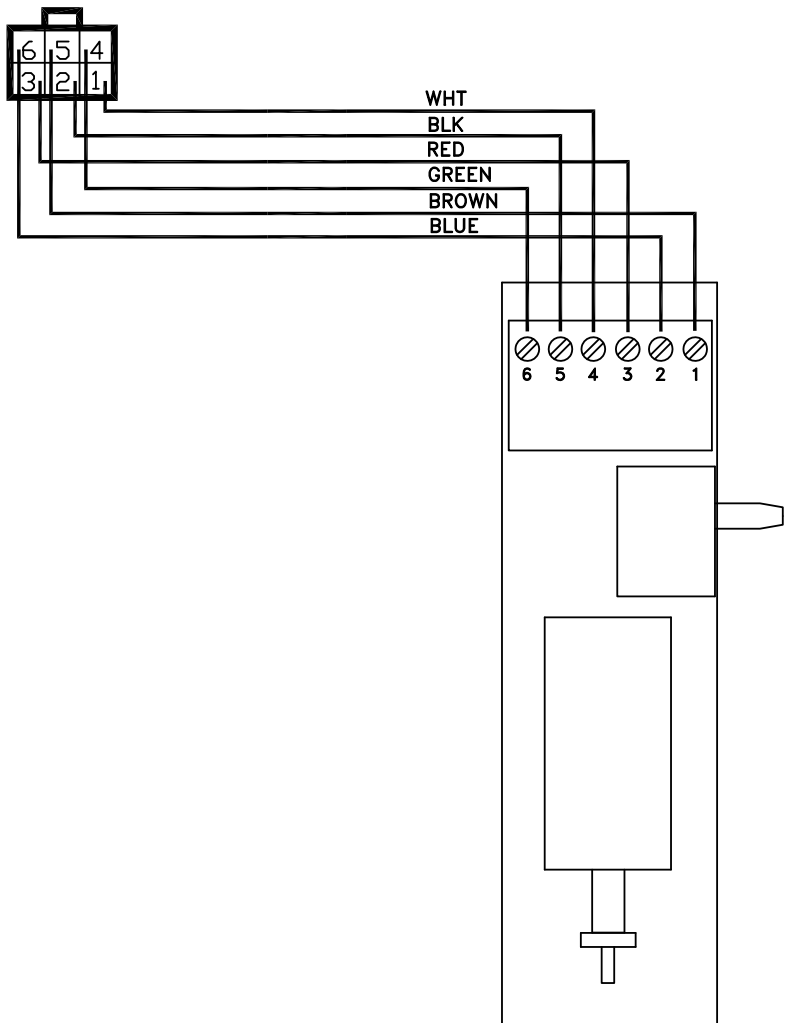

4– 5– DOOR CLOSED CONTACTS

3– 6– DOOR LOCKED CONTACTS

1– LOCK SOLENOID +

2– LOCK SOLENOID –

THE INFORMATION DISCLOSED HEREIN IS THE EXCLUSIVE PROPERTY OF savaria. AND MAY NOT BE USED BY OTHERS WITHOUT PRIOR WRITTEN CONSENT	UNLESS OTHERWISE SPECIFIED ALL DIMENSIONS ARE IN INCHES. ALL DIMENSIONS IN [ ] ARE METRIC TOLERANCES ON: .X=±0.1 [.X=±3] .XX=±0.03 [.XX=±0.8] .XXX=±0.01 [.XXX=±0.25] ANGLES X =±2.X =±0.5	DO NOT SCALE DRAWING	REMOVE ALL BURRS & SHARP CORNERS
TITLE: INFINITY CONTROLLER LOCK HOOK–UP DIAGRAMS	MATERIAL: N/A	DESIGNED BY:	DESIGN DATE: / DRAWN BY: JS / DRAWN DATE: MAR. 10/08 / SCALE: N/A / DRAFTSPERSON: N/A / REVISION: 006
	FINISH: N/A	SHEET 2 OF 2	DRAWING NO: LOCK_HOOK / SIZE B

REVISIONS			
REV	ECO NO.	DATE	REVISED BY
000	C4	08/22/23	1ST RELEASE

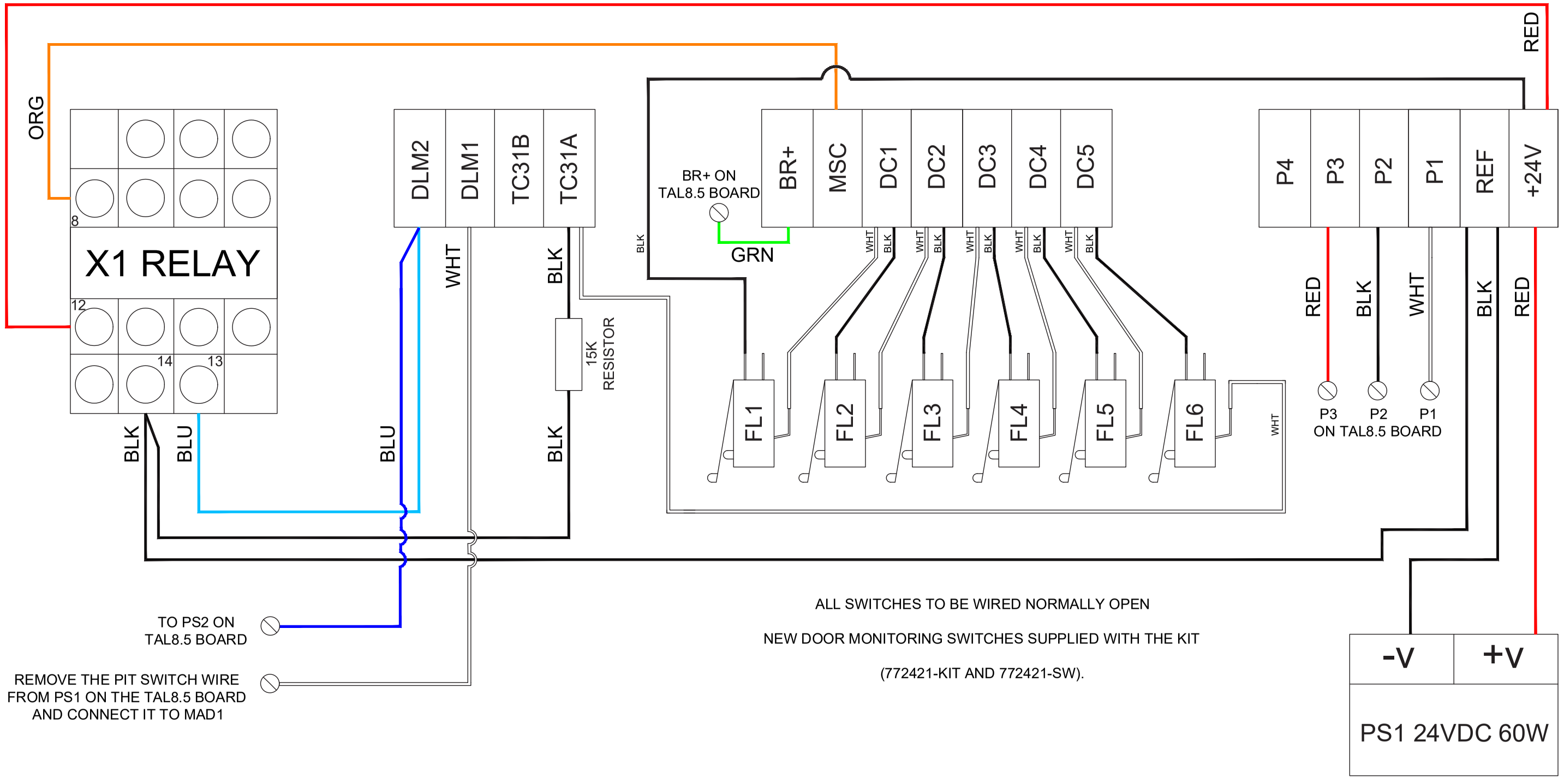

THE INFORMATION DISCLOSED HEREIN IS THE EXCLUSIVE PROPERTY OF savaria™ AND MAY NOT BE USED BY OTHERS WITHOUT PRIOR WRITTEN CONSENT

TITLE: EMI–6 DLM KIT WIRING DIAGRAM SIMPLIFIED

UNLESS OTHERWISE SPECIFIED ALL DIMENSIONS ARE IN INCHES. ALL DIMENSIONS IN [] ARE METRIC
TOLERANCES ON:
.X=±0.1 [.X=±3]
.XX=±0.03 [.XX=±0.8]
.XXX=±0.01 [.XXX=±0.25]
ANGLES X =±2.X =±0.5

MATERIAL: N/A

FINISH: N/A

DO NOT SCALE DRAWING

REMOVE ALL BURRS & SHARP CORNERS

DESIGNED BY:	DESIGN DATE:	SCALE:	REVISION:
		N/A	000
DRAWN BY:	DRAWN DATE:	DRAFTSPERSON:	
HARSUMEET.S	08/22/23	N/A	
SHEET 1 OF 1	DRAWING NO: EMI–6 DLM WIRING		SIZE B

CONTROLLER SCHEMATIC SYMBOLS

CONTROLLER TERMINAL STRIP CONNECTION

CAR TOP BOX TERMINAL

CAT-5 TERMINAL

PCB TERMINAL (INTERNAL)

PCB TERMINAL (FIELD)

COMPUTER BIDERECTIONAL TERMINAL

COMPUTER INPUT

COMPUTER OUTPUT

COMPUTER TRANSISTOR OUTPUT

HOISTWAY CONNECTED WIRE

FACTORY CONNECTED WIRE

BRIDGE RECTIFIER

VARISTOR

TRAVEL CABLE WIRE

RELAY COIL
VALVE COIL

LIMIT SWITCH N.C.

LIMIT SWITCH N.O.

TEMPERATURE SENSER

LIGHT

PUSH BUTTON

DIODE

TOGGLE SW
DPDT

CONTACT N.O.

CONTACT N.C.

HAND OPERATED SWITCH N.C.

HAND OPERATED SWITCH N.O.

FUSE

Test point on PCB

PRESSURE SWITCH N.O.

CIRCUIT BREAKER

REV DATE: 08-22-23

PAGE 9 of 9	DWG #:6 STOP SCH

SAVARIA HYDRAULIC (INFINITY)

1 2 3 4 5 6 7 8

A B C D E F G H

POWER PCB

BL

REF

L1 L2 L2

P5/F2
N2 N2 110 SW2 SW1 L N +V -V

Plug to:
UPS Recept.

UPS
425VA

Recpt. to:
UPS Plug

P2/E3
110N

F8
15A

DISCONNECT INTERLOCKED
AUX. SWITCH

REF

P3/D8 P7/B8
P4/B1 P8/B2
P6/B2 P8/B8

P3/D1 P6/B1
P6/B7 P8/C2
24DC2

P4/C2
24DC3

P4/B2
P5/C3
24DC4

F2
2A

F3
3A

F4
2A

F1
4A

110V
P2/B3
P6/C2

110N
P2/C3
P5/A1
P6/C2

RESET

+24V FROM DLM

REF FROM DLM

PS1
24VDC 60W

PS2
24VDC 60W

24VDC PS2 **P2/E4**

PS2 REF **P2/F5**

OL

CC

PT1

PT2

CC

OL

M1 AUX

M2 AUX

HYDRAULIC 3PH

L1 L2 L3 N

M1 M2 OL

T1 T2 T3

T3 (PNK)
T9 (BRN)

T2 (RED)
T8 (BLU)

T1 (BLK)
T7 (YEL)

PUMP
MOTOR

GND (GRN)

T4 (BLK)
T5 (RED)
T6 (PNK)

TIE TOGETHER

208VAC–3–60 POWER
AND 30 AMP MAX. DUAL
ELEMENT TIME DELAY FUSES
SUPPLIED BY THE ELECTRICAL
CONTRACTOR PER NEC CODE.

REV DATE: 08-22-23

PAGE 1 of 9	MODEL TYPE: ROPED HYDRO
JOB#:	DIST:
DWG #: 6 STOP SCH	JOB NAME:
DWG DATE:	ENGR:

SAVARIA HYDRAULIC (INFINITY)

HYDRAULIC 1PH

POWER PCB

BL

REF

L1 L2 L2

P5/F2
N2 N2 110 SW2 SW1 L N +V -V

Plug to:
UPS Recept.

UPS
425VA

Recpt. to:
UPS Plug

P2/E3
110N

F8
15A

DISCONNECT INTERLOCKED
AUX. SWITCH

REF

P3/D8 P7/B8
P4/B1 P8/B2
P6/B2 P8/B8

P3/D1 P6/B1
P6/B7 P8/C2
24DC2

P4/C2
24DC3

P4/B2
P5/C3
24DC4

F2
2A

F3
3A

F4
2A

F1
4A

110V
P2/B3
P6/C2

110N
P2/C3
P5/A1
P6/C2

RESET

+24V FROM DLM

REF FROM DLM

PS1
24VDC 60W

PS2
24VDC 60W

24VDC PS2 **P2/E4**

PS2 REF **P2/F5**

OL

CC

PT1

PT2

CC

OL

M1 AUX

M2 AUX

M1 M1

M2 M2 M2

OL OL OL

T1 T2 T3

L1 L2 N

T4 (YEL)
T7 (BLK)

T1 (BLU)
T8 (RED)

PUMP
MOTOR

GND (GRN)

208/240VAC–1–60 POWER AND 30 AMP MAX. DUAL ELEMENT TIME DELAY FUSES SUPPLIED BY THE ELECTRICAL CONTRACTOR PER NEC CODE.

REV DATE: 08-22-23

PAGE 1 of 9	MODEL TYPE: ROPED HYDRO
JOB#:	DIST:
DWG #: 6 STOP SCH	JOB NAME:
DWG DATE:	ENGR:

SAVARIA HYDRAULIC (INFINITY)

HYDRAULIC 3PH

REV DATE: 08-22-23

PAGE 2 of 9 | DWG #: 6 STOP SCH

SAVARIA HYDRAULIC (INFINITY)

HYDRAULIC 1PH

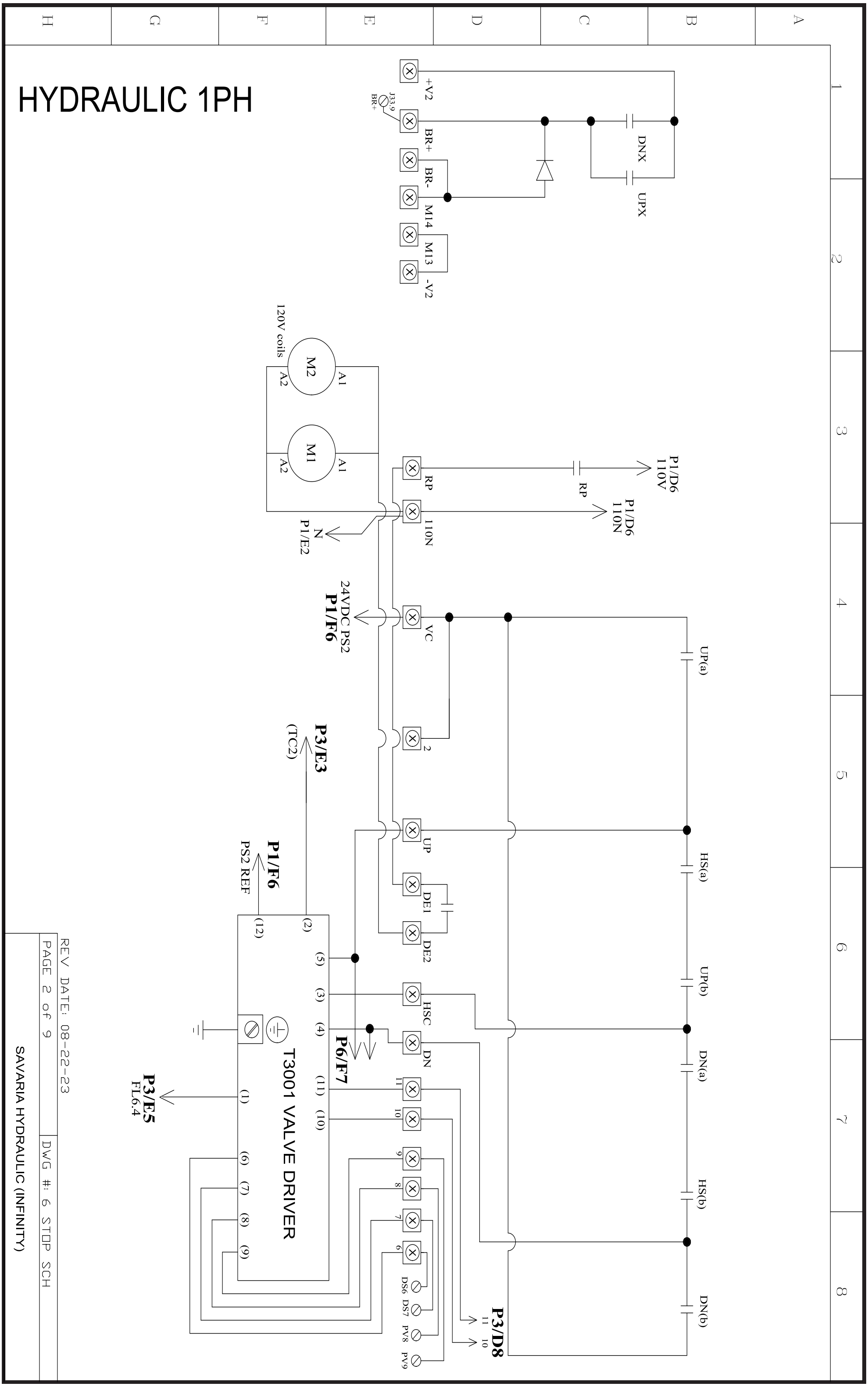

REV DATE: 08-22-23

PAGE 2 of 9 | DWG #: 6 STOP SCH

SAVARIA HYDRAULIC (INFINITY)

HYDRAULIC 1PH & 3PH

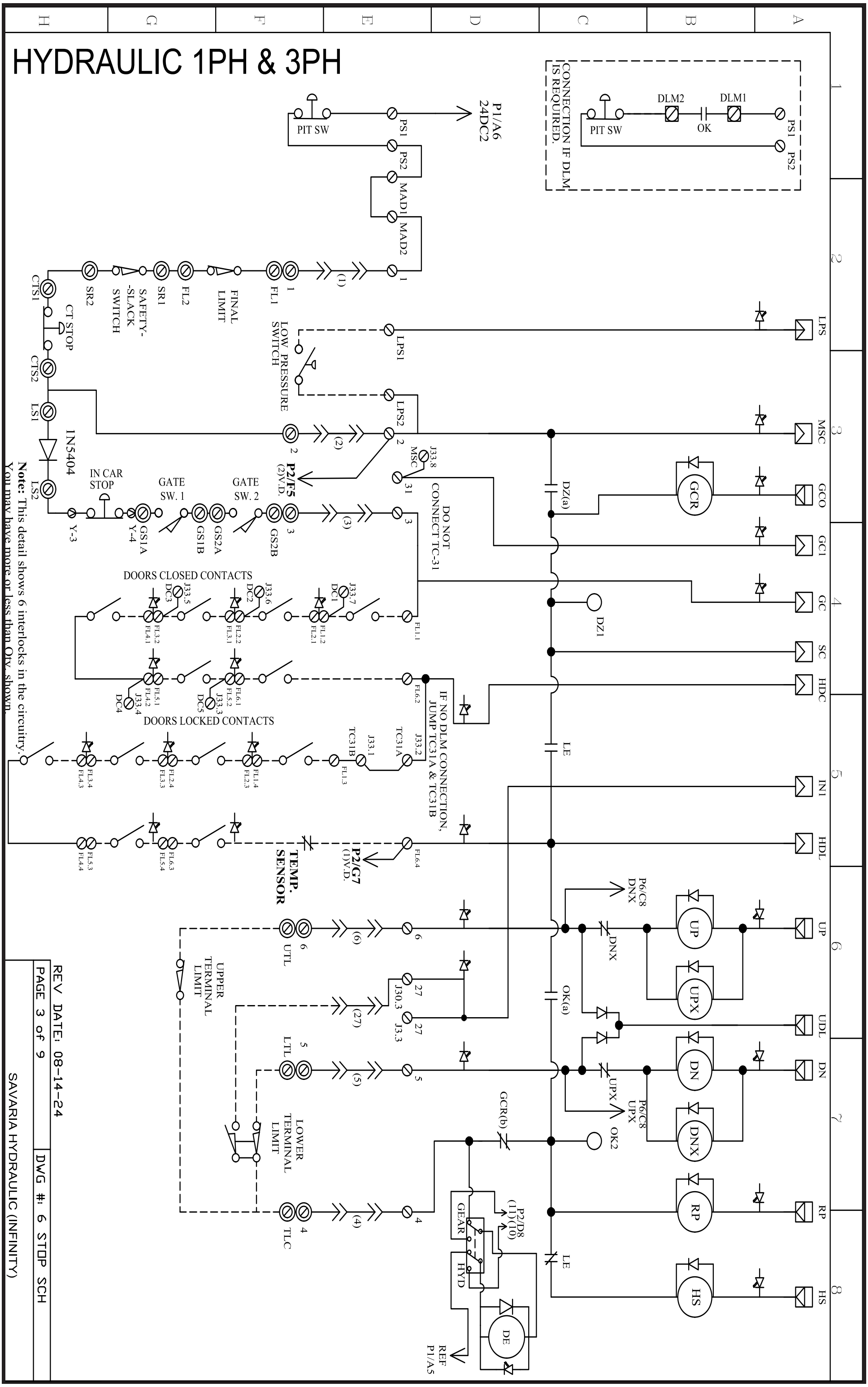

Note: This detail shows 6 interlocks in the circuitry. You may have more or less than Qty. shown.

REV DATE: 08-14-24

PAGE 3 of 9	DWG #: 6 STOP SCH

SAVARIA HYDRAULIC (INFINITY)

HYDRAULIC 1PH & 3PH

REF
P1/A5

P1/A7
24DC3

24DC4
P1/A7

BK(a)

DZ (b)

1EL(b)

2EL(b)

3EL(b)

4EL(b)

5EL(b)

6EL(b)

OK(b)

BK(b)

OK1

BK
BKR
OK
AL
LE
1EL
2EL
3EL
4EL
5EL
6EL
DC1
DC2
DC3
DC4
DC5
DC6
BDZ
B1
B2
B3
B4
B5
B6

FL1.6
FL1.5
FL2.6
FL2.5
FL3.6
FL3.5
FL4.6
FL4.5
FL5.6
FL5.5
FL6.6
FL6.5

ELEC. LOCK 1ST
ELEC. LOCK 2ND
ELEC. LOCK 3RD
ELEC. LOCK 4TH
ELEC. LOCK 5TH
ELEC. LOCK 6TH

CH1
CH2
CH3
CH4

EMI LOCKS AND CAR HERE LIGHTS

REV DATE: 08-22-23

PAGE 4 of 9

DWG #: 6 STOP SCH

SAVARIA HYDRAULIC (INFINITY)

HYDRAULIC 1PH & 3PH

P1/D6
110N

EL

24DC4
P1/A7

REF

AL

ALS

24AC

24N

25

26

L
N
G

PS3
24VDC 15W

+V
-V

(25)

(26)

25
CLH

26
CLN

RLY1

N2
P1/D3

110/120VAC–1–60 POWER
AND 10 AMP MAX.
SUPPLIED BY THE ELECTRICAL
CONTRACTOR PER NEC CODE.

1EL(a) 2EL(a) 3EL(a) 4EL(a) 5EL(a) 6EL(a)

FL1.11 FL1.12 FL2.11 FL2.12 FL3.11 FL3.12 FL4.11 FL4.12 FL5.11 FL5.12 FL6.11 FL6.12

FAN1 FAN2

RLY1

REV DATE: 08-22-23

PAGE 5 of 9 | DWG #: 6 STOP SCH

SAVARIA HYDRAULIC (INFINITY)

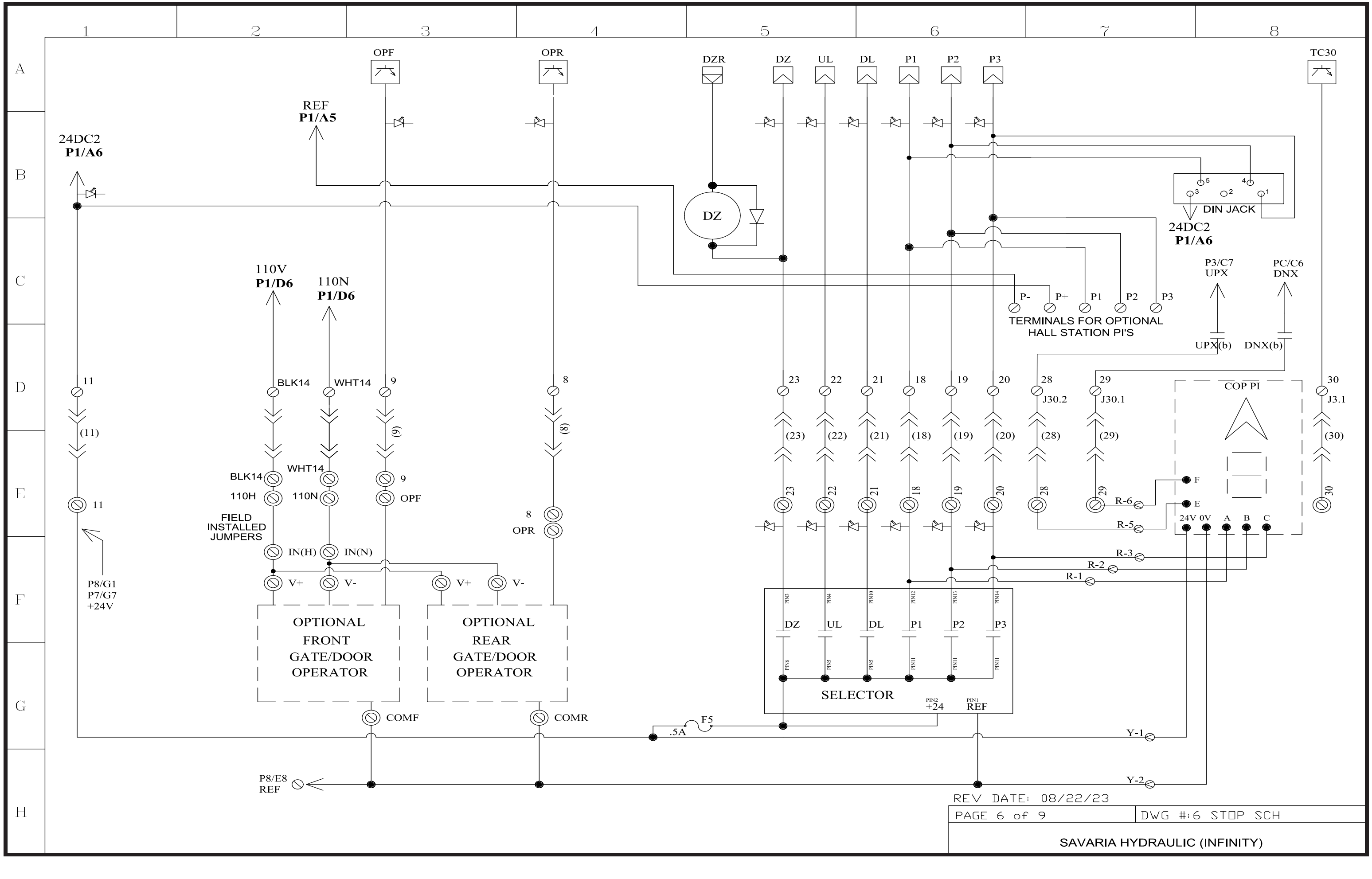

REV DATE: 08/22/23

PAGE 6 of 9 | DWG #:6 STOP SCH

SAVARIA HYDRAULIC (INFINITY)

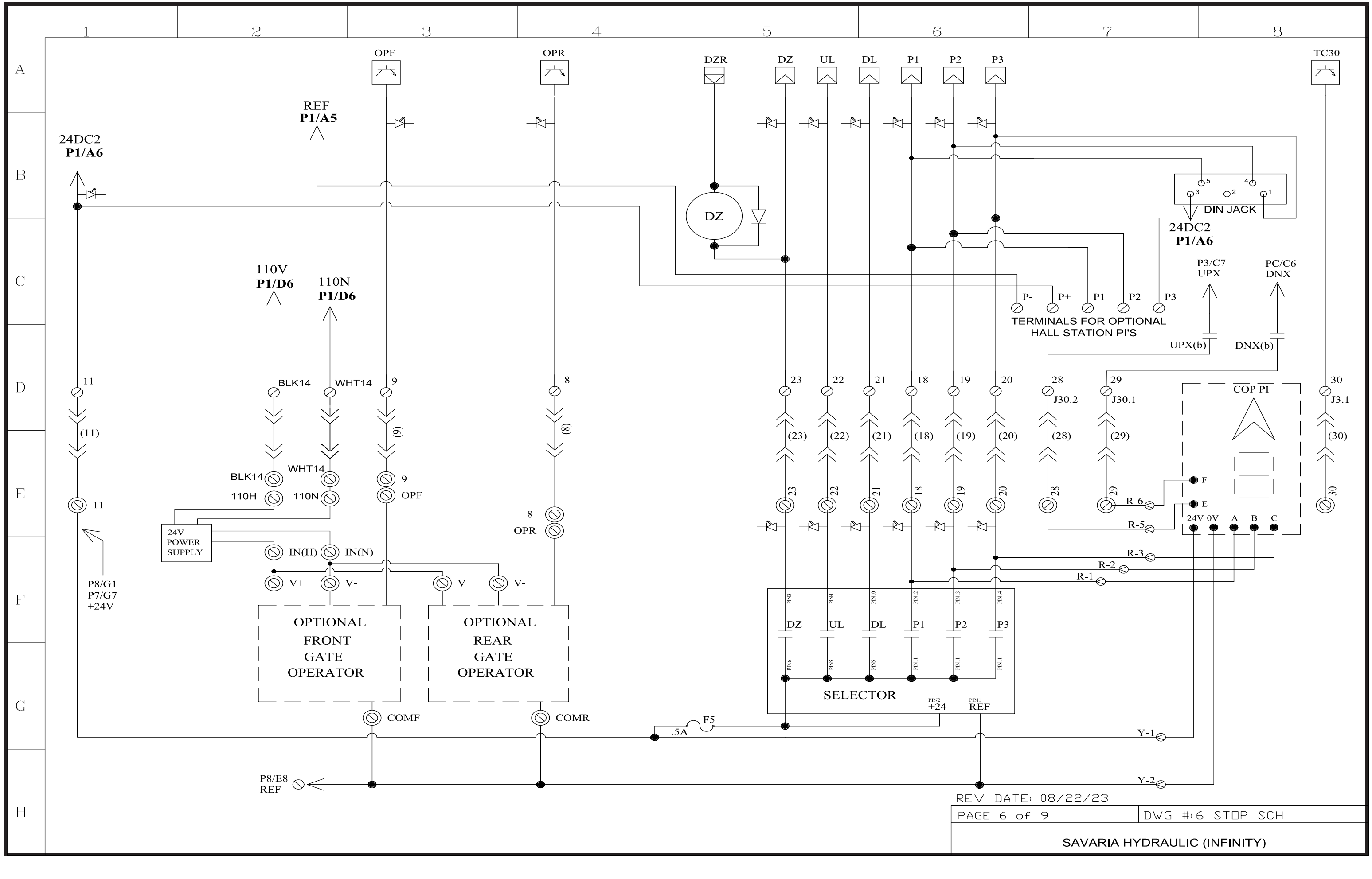

REV DATE: 08/22/23

PAGE 6 of 9	DWG #:6 STOP SCH

SAVARIA HYDRAULIC (INFINITY)

HYDRAULIC 1PH & 3PH

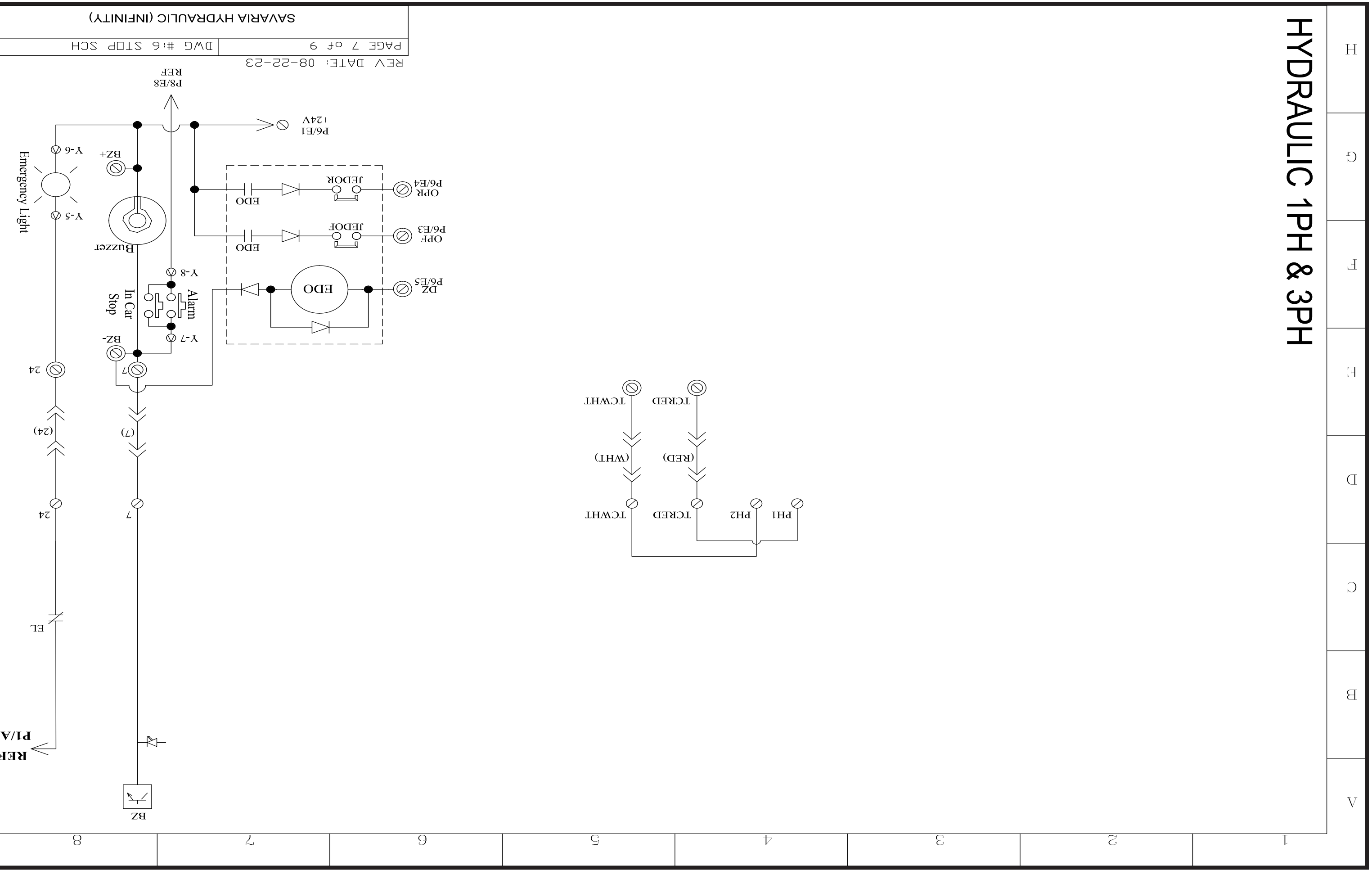

HYDRAULIC 1PH & 3PH

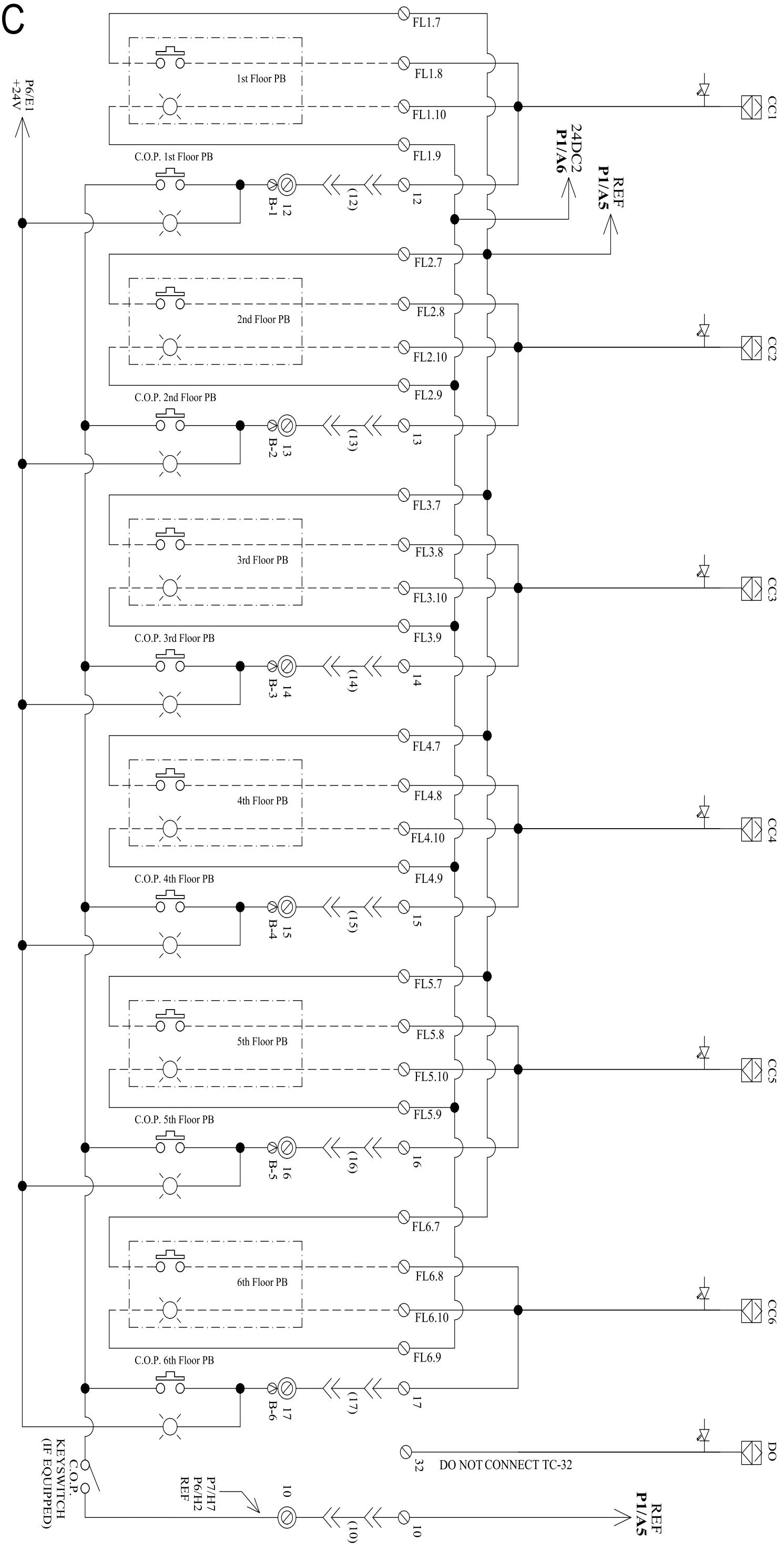

REV DATE: 08-22-23

PAGE 8 of 9

DWG #:6 STOP SCH

SAVARIA HYDRAULIC (INFINITY)

SSR: OMRON G3TA-ODX02S 24VDC
RELAY: OMRON MY2-D 24VDC
TIMER: OMRON H3CR-AP
MODE=D, RANGE=SEC,TIME=1s

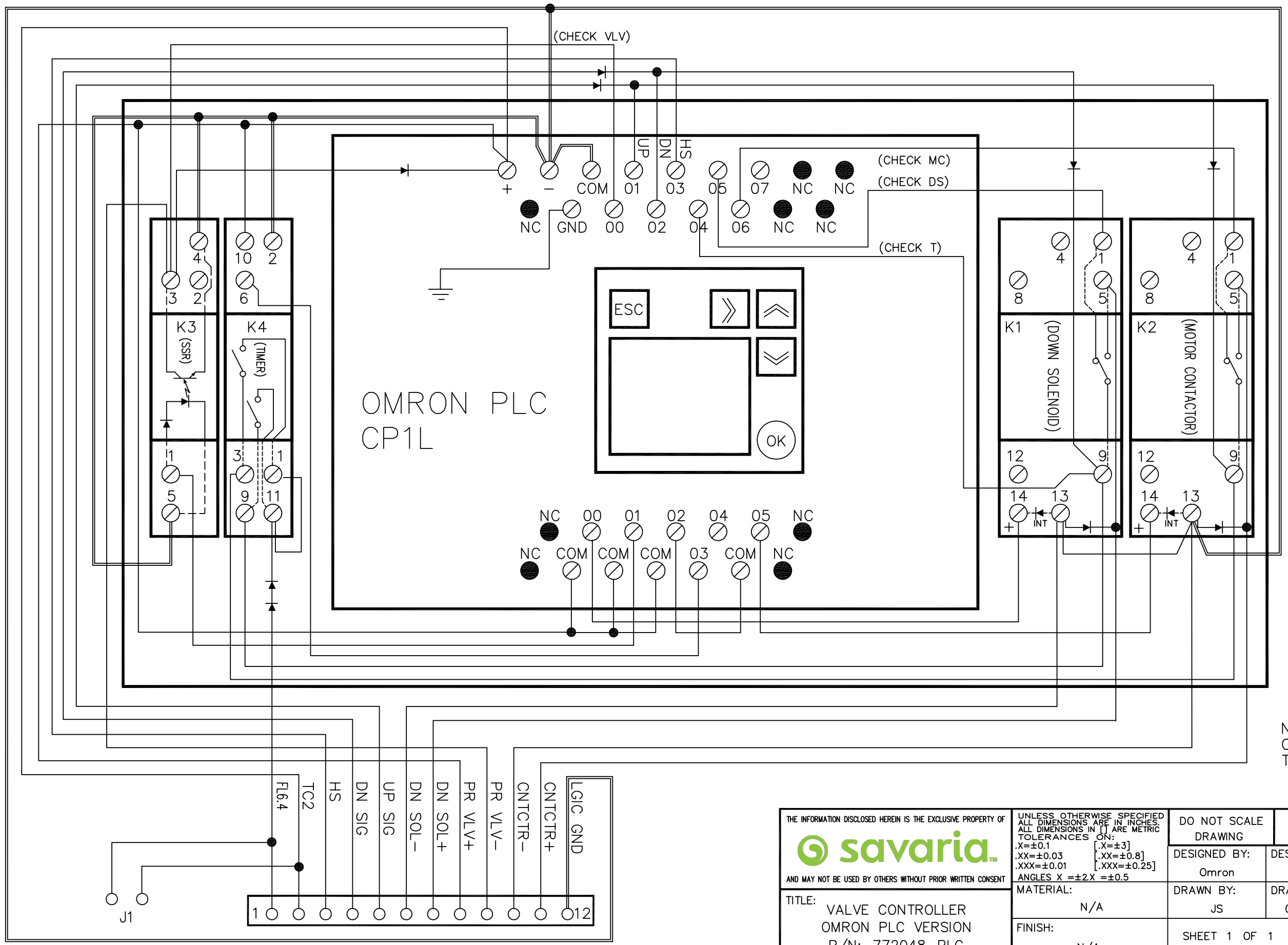

NOTE: EARTH GND TERMINAL ON OMRON PLC CONNECTED TO GROUNDING BAR IN CONT.

THE INFORMATION DISCLOSED HEREIN IS THE EXCLUSIVE PROPERTY OF savaria™ AND MAY NOT BE USED BY OTHERS WITHOUT PRIOR WRITTEN CONSENT

TITLE: VALVE CONTROLLER OMRON PLC VERSION P/N: 772048-PLC

UNLESS OTHERWISE SPECIFIED ALL DIMENSIONS ARE IN INCHES. ALL DIMENSIONS IN [] ARE METRIC
TOLERANCES ON:
.X=±0.1 [.X=±3]
.XX=±0.03 [.XX=±0.8]
.XXX=±0.01 [.XXX=±0.25]
ANGLES X =±2.X =±0.5

MATERIAL: N/A

FINISH: N/A

DO NOT SCALE DRAWING

REMOVE ALL BURRS & SHARP CORNERS

DESIGNED BY:	DESIGN DATE:	SCALE:	REVISION:
Omron		N/A	002
DRAWN BY:	DRAWN DATE:	DRAFTSPERSON:	
JS	09-24-18		
SHEET 1 OF 1	DRAWING NO: OMRON VALVE CONTROLLER		SIZE B

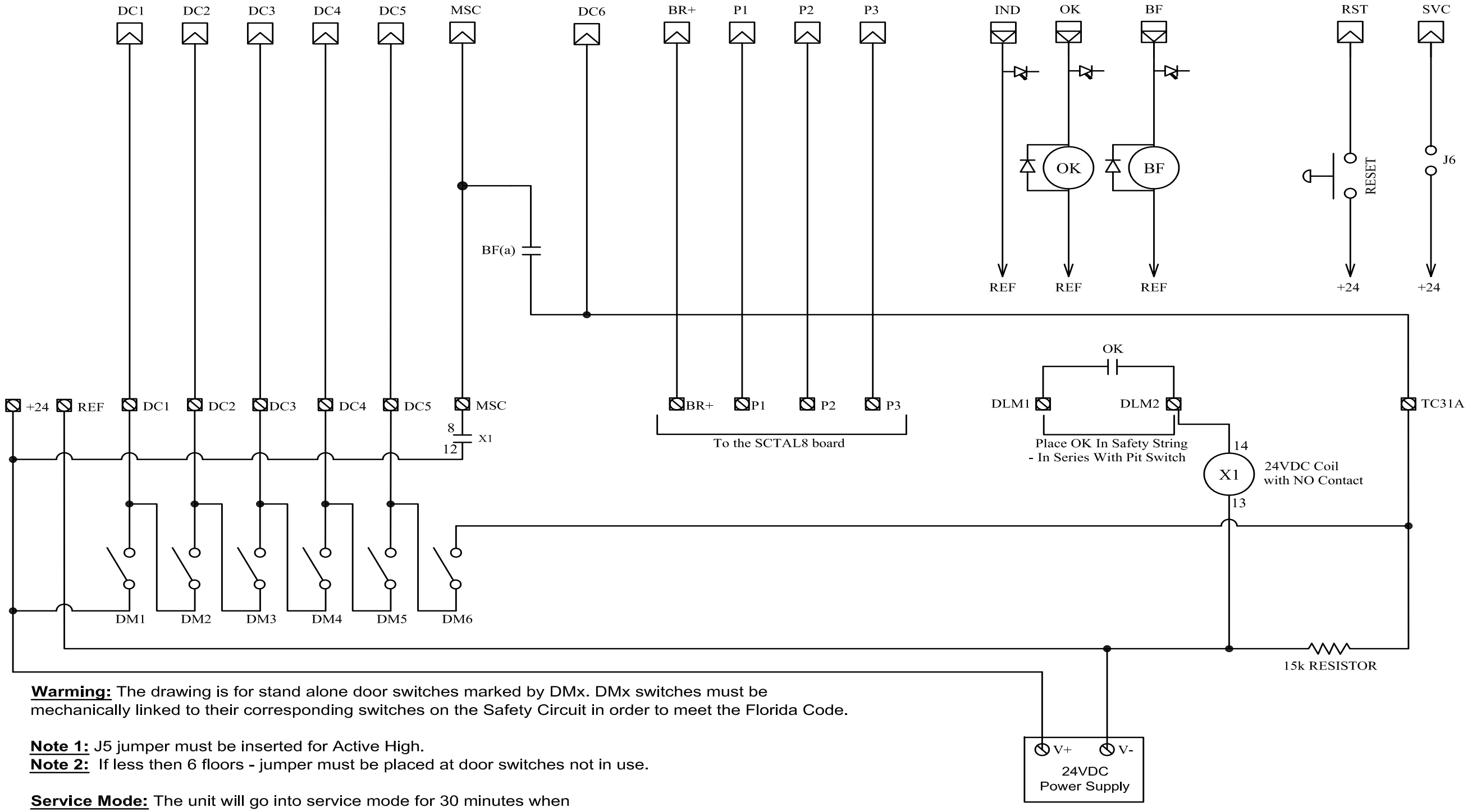

Warming: The drawing is for stand alone door switches marked by DMx. DMx switches must be mechanically linked to their corresponding switches on the Safety Circuit in order to meet the Florida Code.

Note 1: J5 jumper must be inserted for Active High.
Note 2: If less then 6 floors - jumper must be placed at door switches not in use.

Service Mode: The unit will go into service mode for 30 minutes when While on Service Mode, OK relay will be continuously ON

Fault Reset: The Reset push button must remain active for 5 seconds.

LEDs Status

STATUS	OK LED	IND LED
NORMAL	ON	ON
SERVICE	ON	0.5s ON / 0.5s OFF
MONITORING FAULT	OFF	0.5s ON / 2s OFF
INTERNAL FAULT	OFF	1s ON / 1s OFF

Rev:09-10-20

PAGE 1 OF 1	DWG #:DLM-24/0VDC
DOOR LOCK MONITORING (DLM) PCB	

REVISIONS			
REV	ECO NO.	DATE	REVISED BY
000	C4	08/22/23	1ST RELEASE
001	C4	09/06/24	H. SINGH

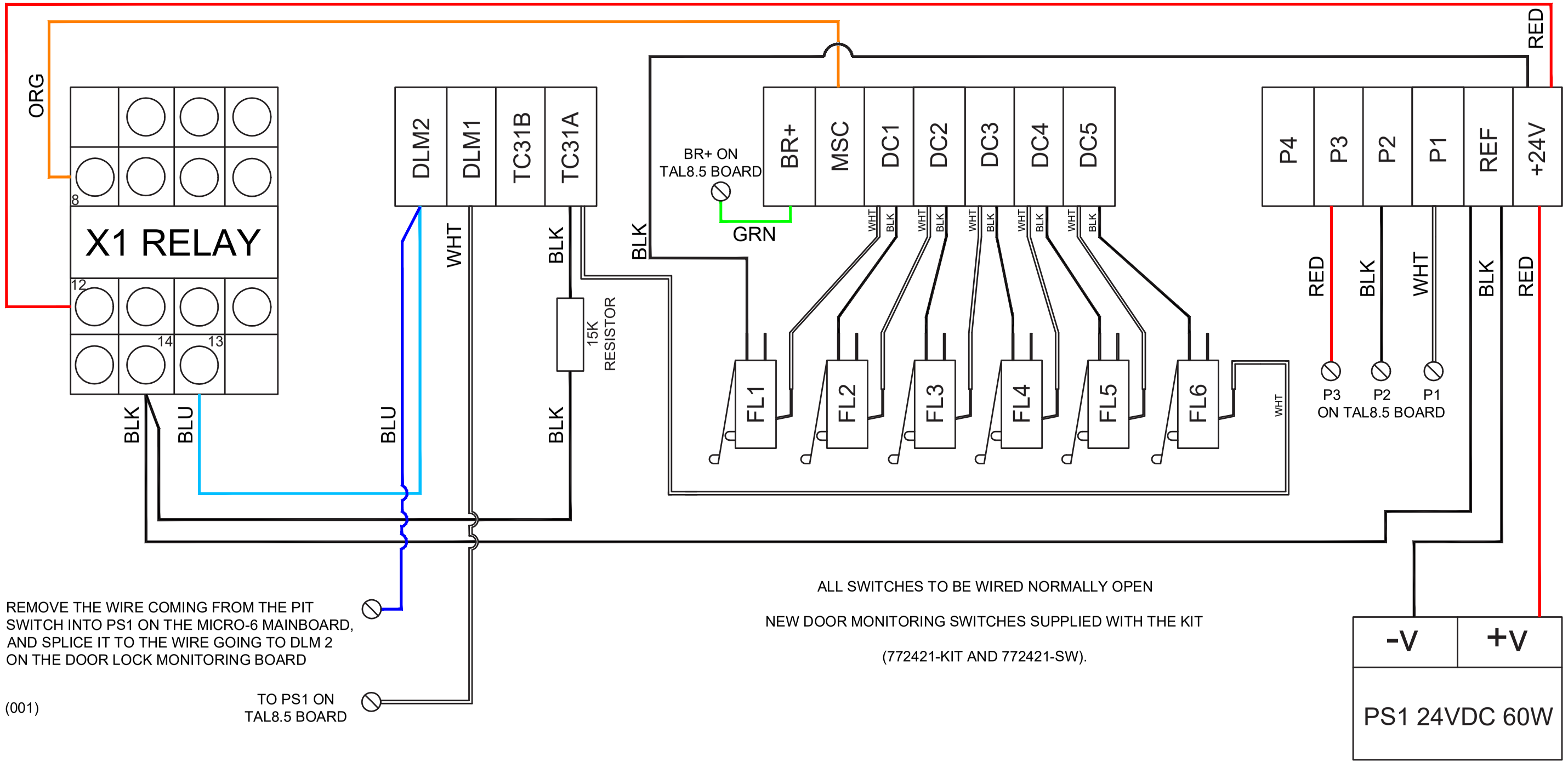

THE INFORMATION DISCLOSED HEREIN IS THE EXCLUSIVE PROPERTY OF savaria™ AND MAY NOT BE USED BY OTHERS WITHOUT PRIOR WRITTEN CONSENT

TITLE: EMI–6 DLM KIT WIRING DIAGRAM SIMPLIFIED

UNLESS OTHERWISE SPECIFIED ALL DIMENSIONS ARE IN INCHES. ALL DIMENSIONS IN [] ARE METRIC
TOLERANCES ON:
.X=±0.1 [.X=±3]
.XX=±0.03 [.XX=±0.8]
.XXX=±0.01 [.XXX=±0.25]
ANGLES X =±2 X =±0.5

MATERIAL: N/A

FINISH: N/A

DO NOT SCALE DRAWING

REMOVE ALL BURRS & SHARP CORNERS

DESIGNED BY:	DESIGN DATE:	SCALE:	REVISION:
		N/A	001
DRAWN BY:	DRAWN DATE:	DRAFTSPERSON:	
HARSUMEET.S	08/22/23	N/A	
SHEET 1 OF 1	DRAWING NO: EMI–6 DLM WIRING		SIZE B

REV.	ECO NO.	DESCRIPTION	REV. BY	APPR. BY	DD/MM/YYYY
0	2532	INITIAL RELEASE	H. SINGH	D. JAEGER	23/07/2024

LUXURY FLUSH DOOR (KRONENBERG) INTERNAL WIRING

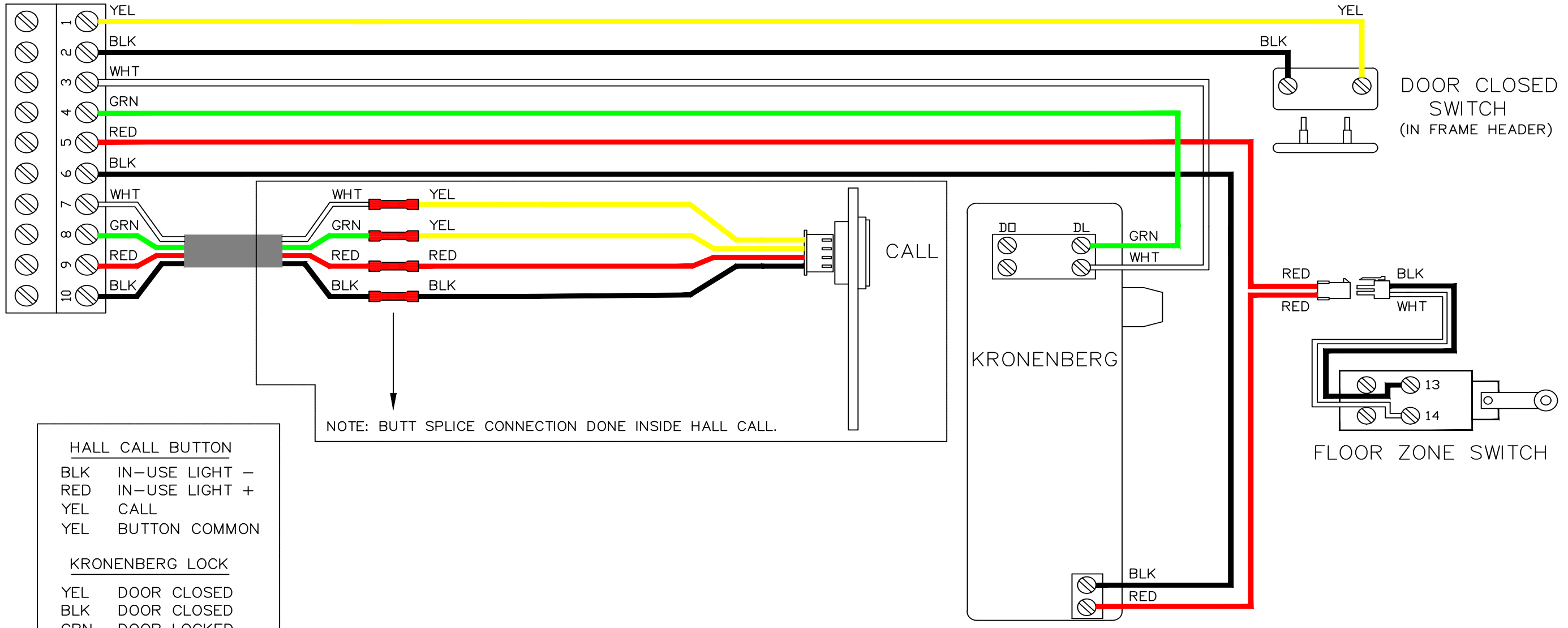

HALL CALL BUTTON

BLK	IN–USE LIGHT –
RED	IN–USE LIGHT +
YEL	CALL
YEL	BUTTON COMMON

KRONENBERG LOCK

YEL	DOOR CLOSED
BLK	DOOR CLOSED
GRN	DOOR LOCKED
RED	SOLENOID +
BLK	SOLENOID –
WHT	DOOR LOCKED

UNLESS OTHERWISE SPECIFIED:
ALL DIMENSIONS ARE IN INCHES.
ALL DIMENSIONS IN [] ARE METRIC.
TOLERANCES:
.X= ± .1 [X=±3]
.XX= ± .03 [X.X=± 0.8]
.XXX= ± .010 [X.XX=± 0.25]
ANGLES .X ° =± .5°

PROPRIETARY AND CONFIDENTIAL
THE INFORMATION CONTAINED IN THIS DRAWING IS THE SOLE PROPERTY OF SAVARIA. ANY REPRODUCTION IN PART OR AS A WHOLE WITHOUT THE WRITTEN PERMISSION OF SAVARIA IS PROHIBITED.

DO NOT SCALE DRAWING

	NAME	DD/MM/YYYY
DESIGNED BY	H. SINGH	23/07/2024

MATERIAL: N/A

FINISH: N/A

NOTES (UNLESS OTHERWISE SPECIFIED):
-REMOVE ALL BURRS, WELDING SPATTER, SHARP CORNERS, OIL, LUBRICANTS AND OTHER CONTAMINANTS.
- THE DIMENSIONS ON THE PRESENT DRAWING OVERRIDE ANY OTHER DATA (I.E., *.DXF, *.SLDPRT, ETC.).

savaria

TITLE: RESIDENTIAL
LUXURY FLUSH DOOR
INTERNAL WIRING - REMOTE HC

DWG. NO. 326727-H00K | REV 0

SIZE: A3 | SHEET 1 OF 1

REV.	ECO NO.	DESCRIPTION	REV. BY	APPR. BY	DD/MM/YYYY
0	2532	INITIAL RELEASE	H. SINGH	D. JAEGER	23/07/2024

LUXURY FLUSH DOOR (KRONENBERG) INTERNAL WIRING

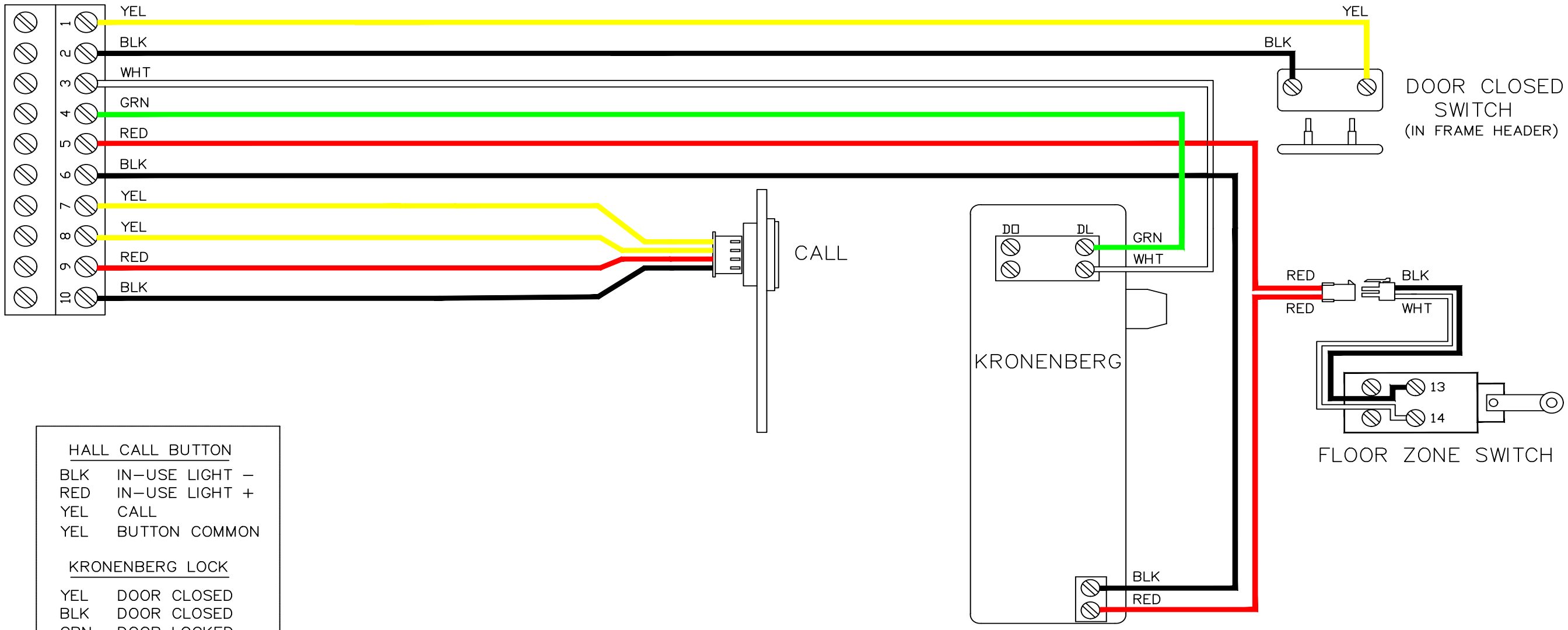

HALL CALL BUTTON

BLK	IN–USE LIGHT –
RED	IN–USE LIGHT +
YEL	CALL
YEL	BUTTON COMMON

KRONENBERG LOCK

YEL	DOOR CLOSED
BLK	DOOR CLOSED
GRN	DOOR LOCKED
RED	SOLENOID +
BLK	SOLENOID –
WHT	DOOR LOCKED

UNLESS OTHERWISE SPECIFIED:
ALL DIMENSIONS ARE IN INCHES.
ALL DIMENSIONS IN [] ARE METRIC.
TOLERANCES:
.X= ± .1 [X=±3]
.XX= ± .03 [X.X=± 0.8]
.XXX= ± .010 [X.XX=± 0.25]
ANGLES .X °=± .5°

PROPRIETARY AND CONFIDENTIAL
THE INFORMATION CONTAINED IN THIS DRAWING IS THE SOLE PROPERTY OF SAVARIA. ANY REPRODUCTION IN PART OR AS A WHOLE WITHOUT THE WRITTEN PERMISSION OF SAVARIA IS PROHIBITED.

DO NOT SCALE DRAWING

	NAME	DD/MM/YYYY
DESIGNED BY	H. SINGH	23/07/2024

MATERIAL: N/A

FINISH: N/A

NOTES (UNLESS OTHERWISE SPECIFIED):
-REMOVE ALL BURRS, WELDING SPATTER, SHARP CORNERS, OIL, LUBRICANTS AND OTHER CONTAMINANTS.
- THE DIMENSIONS ON THE PRESENT DRAWING OVERRIDE ANY OTHER DATA (I.E., *.DXF, *.SLDPRT, ETC.).

savaria

TITLE: RESIDENTIAL LUXURY FLUSH DOOR INTERNAL WIRING

DWG. NO. 326728-H00K

REV 0

SIZE: A3

SHEET 1 OF 1

REV.	ECO NO.	DESCRIPTION	REV. BY	APPR. BY	DD/MM/YYYY
0	2532	INITIAL RELEASE	H. SINGH	D. JAEGER	23/07/2024

LUXURY FLUSH DOOR (KRONENBERG) INTERNAL WIRING

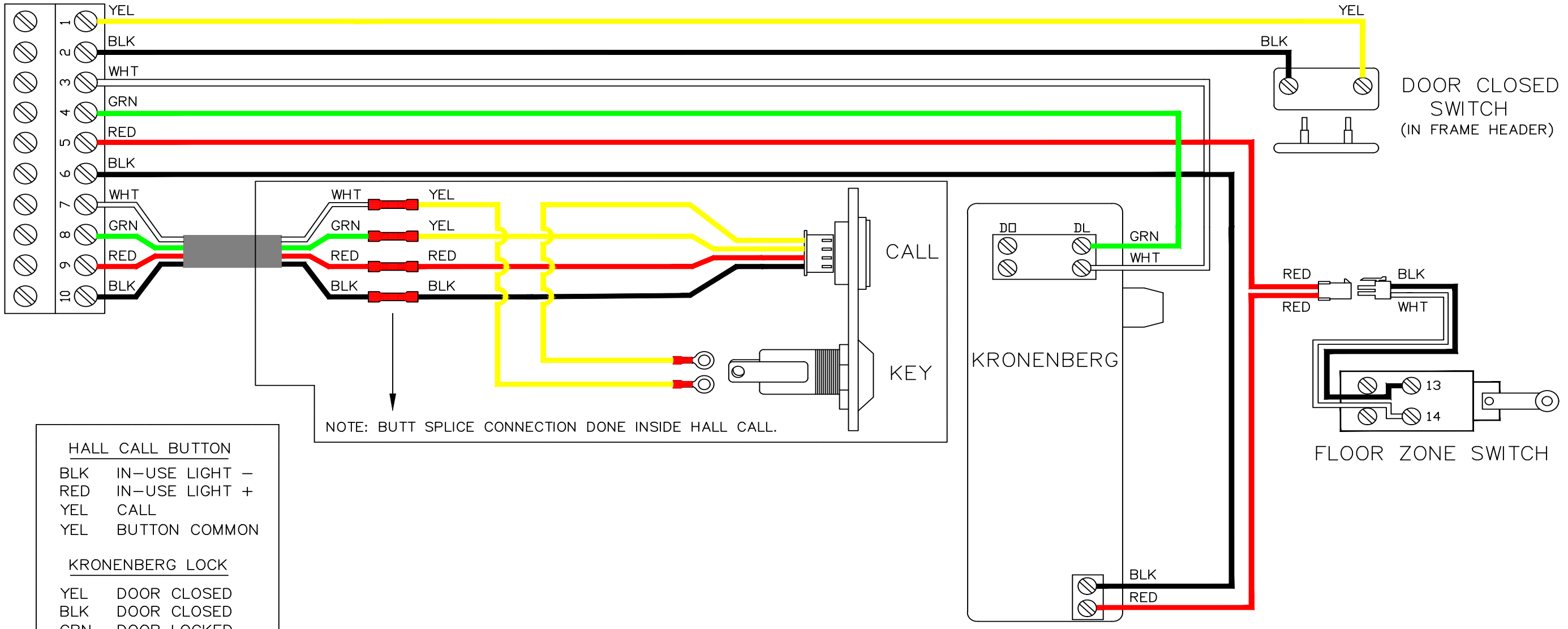

HALL CALL BUTTON

BLK	IN–USE LIGHT –
RED	IN–USE LIGHT +
YEL	CALL
YEL	BUTTON COMMON

KRONENBERG LOCK

YEL	DOOR CLOSED
BLK	DOOR CLOSED
GRN	DOOR LOCKED
RED	SOLENOID +
BLK	SOLENOID –
WHT	DOOR LOCKED

UNLESS OTHERWISE SPECIFIED:
ALL DIMENSIONS ARE IN INCHES.
ALL DIMENSIONS IN [] ARE METRIC.
TOLERANCES:
.X= ± .1 [X=±3]
.XX= ± .03 [X.X=± 0.8]
.XXX= ± .010 [X.XX=± 0.25]
ANGLES .X °=± .5°

PROPRIETARY AND CONFIDENTIAL
THE INFORMATION CONTAINED IN THIS DRAWING IS THE SOLE PROPERTY OF SAVARIA. ANY REPRODUCTION IN PART OR AS A WHOLE WITHOUT THE WRITTEN PERMISSION OF SAVARIA IS PROHIBITED.

DO NOT SCALE DRAWING

	NAME	DD/MM/YYYY
DESIGNED BY	H. SINGH	23/07/2024

MATERIAL: N/A

FINISH: N/A

NOTES (UNLESS OTHERWISE SPECIFIED):
-REMOVE ALL BURRS, WELDING SPATTER, SHARP CORNERS, OIL, LUBRICANTS AND OTHER CONTAMINANTS.
- THE DIMENSIONS ON THE PRESENT DRAWING OVERRIDE ANY OTHER DATA (I.E., *.DXF, *.SLDPRT, ETC.).

savaria

TITLE: RESIDENTIAL
LUXURY FLUSH DOOR - KEYED
INTERNAL WIRING - REMOTE HC

DWG. NO. 326727-K-HOOK | REV 0

SIZE: A3 | SHEET 1 OF 1

REV.	ECO NO.	DESCRIPTION	REV. BY	APPR. BY	DD/MM/YYYY
0	2532	INITIAL RELEASE	H. SINGH	D. JAEGER	23/07/2024

LUXURY FLUSH DOOR (KRONENBERG) INTERNAL WIRING

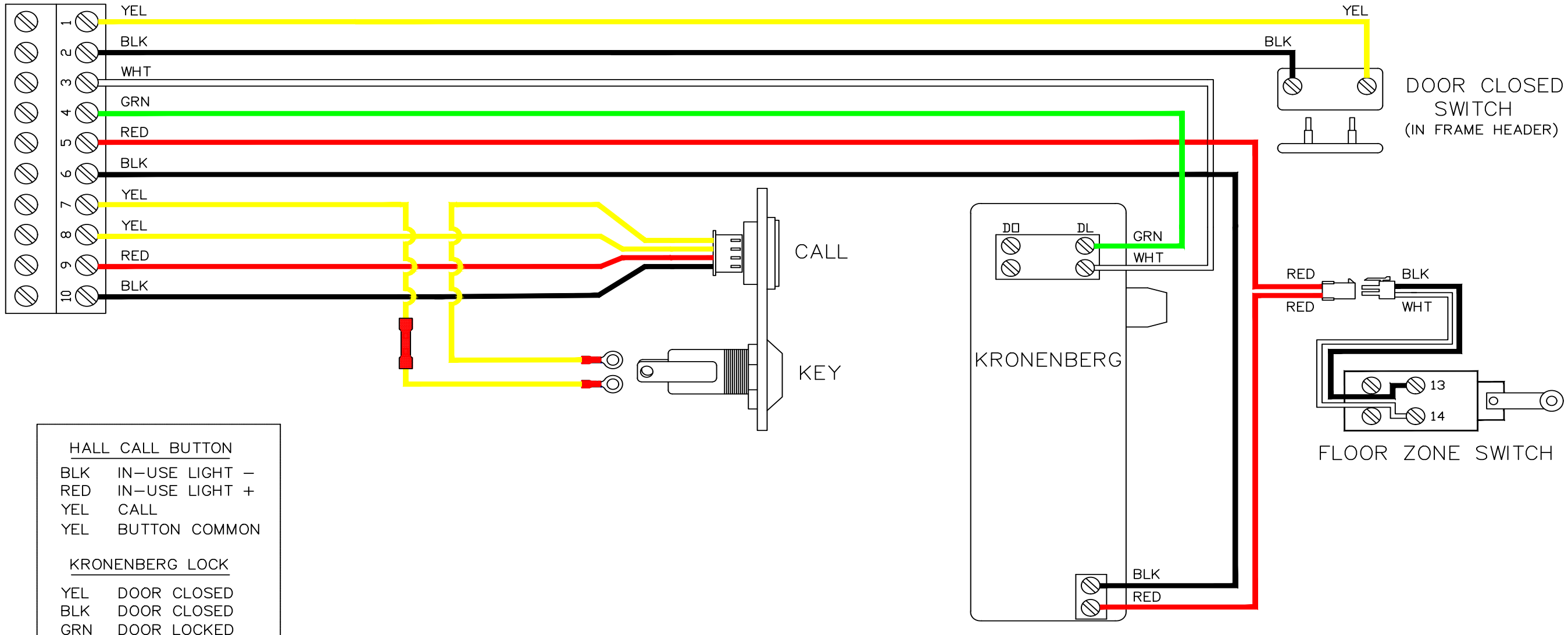

HALL CALL BUTTON

BLK	IN-USE LIGHT –
RED	IN-USE LIGHT +
YEL	CALL
YEL	BUTTON COMMON

KRONENBERG LOCK

YEL	DOOR CLOSED
BLK	DOOR CLOSED
GRN	DOOR LOCKED
RED	SOLENOID +
BLK	SOLENOID –
WHT	DOOR LOCKED

UNLESS OTHERWISE SPECIFIED:
ALL DIMENSIONS ARE IN INCHES.
ALL DIMENSIONS IN [] ARE METRIC.
TOLERANCES:
.X= ± .1 [X=±3]
.XX= ± .03 [XX=± 0.8]
.XXX= ± .010 [XXX=± 0.25]
ANGLES .X °=±.5°

PROPRIETARY AND CONFIDENTIAL
THE INFORMATION CONTAINED IN THIS DRAWING IS THE SOLE PROPERTY OF SAVARIA. ANY REPRODUCTION IN PART OR AS A WHOLE WITHOUT THE WRITTEN PERMISSION OF SAVARIA IS PROHIBITED.

DO NOT SCALE DRAWING

	NAME	DD/MM/YYYY
DESIGNED BY	H. SINGH	23/07/2024

MATERIAL: N/A

FINISH: N/A

NOTES (UNLESS OTHERWISE SPECIFIED):
-REMOVE ALL BURRS, WELDING SPATTER, SHARP CORNERS, OIL, LUBRICANTS AND OTHER CONTAMINANTS.
- THE DIMENSIONS ON THE PRESENT DRAWING OVERRIDE ANY OTHER DATA (I.E., *.DXF, *.SLDPRT, ETC.).

savaria

TITLE: RESIDENTIAL
LUXURY FLUSH DOOR - KEYED
INTERNAL WIRING

DWG. NO. 326728-K-HOOK

REV 0

SIZE: A3

SHEET 1 OF 1

LANDING CONNECTIONS
(LUXURY FLUSH DOOR–KRONENBERG LOCK)

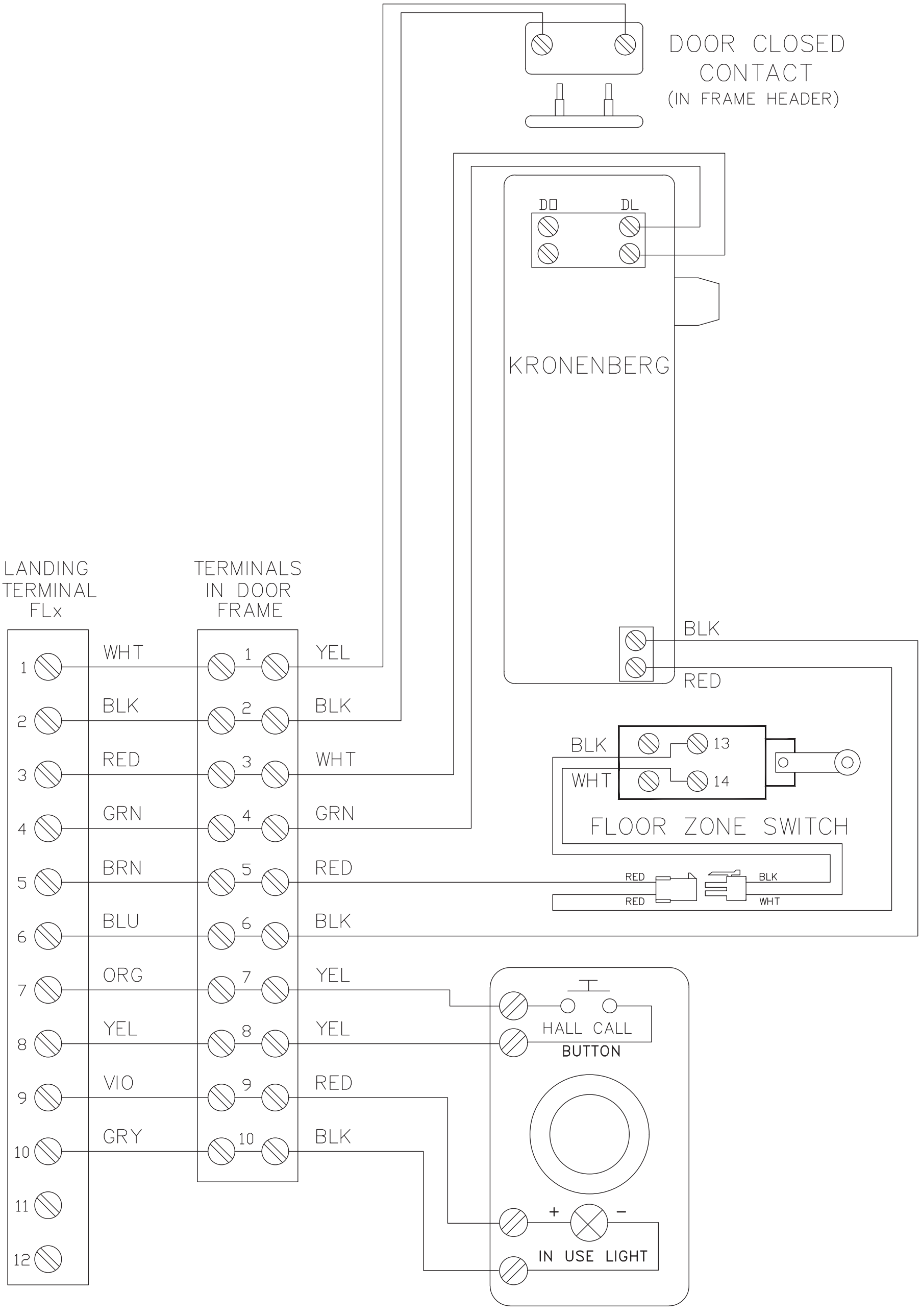

THE INFORMATION DISCLOSED HEREIN IS THE EXCLUSIVE PROPERTY OF savaria™ AND MAY NOT BE USED BY OTHERS WITHOUT PRIOR WRITTEN CONSENT

TITLE: ECLIPSE/INFINITY CONTROLLER LUXURY FLUSH DOOR CONNECTIONS	UNLESS OTHERWISE SPECIFIED ALL DIMENSIONS ARE IN INCHES. ALL DIMENSIONS IN [] ARE METRIC TOLERANCES ON: .X=±0.1 [.X=±3] .XX=±0.03 [.XX=±0.8] .XXX=±0.01 [.XXX=±0.25] ANGLES X =±2.X =±0.5	DO NOT SCALE DRAWING	REMOVE ALL BURRS & SHARP CORNERS	
		DESIGNED BY:	DESIGN DATE:	SCALE: N/A / REVISION: 000
	MATERIAL: N/A	DRAWN BY: HARSUMEET.S	DRAWN DATE: MAY 24, 2024	DRAFTSPERSON: N/A
	FINISH: N/A	SHEET 1 OF 1	DRAWING NO: LANDING–FLUSH LUXURY	SIZE B

savaria®

2 Walker Drive
Brampton, ON L6T 5E1
Canada

Toll Free (800) 791-7999
Fax (905) 791-2222

www.savaria.com
Printed in Canada