savaria

Infinity & Infinity HD

RESIDENTIAL ELEVATORS
(with Micro-6 Controller)



INSTALLATION GUIDE

Part No. 000838, Rev. 054
27-m11-2024

Standard notations

The following notations may be used throughout this guide to emphasize important safety information, mechanical concerns, and other important information. Please review and follow all of these messages.

DANGER	Danger messages indicate an imminently hazardous situation, which, if not avoided, results in death or serious injury. All danger messages feature a standard ISO safety alert symbol followed by the signal word DANGER in capitalized black lettering on a red background.
WARNING	Warning messages indicate a potentially hazardous situation, which, if not avoided, could result in death or serious injury. All warning messages feature a standard ISO safety alert symbol followed by the signal word WARNING in capitalized black lettering on a dark yellow background.
CAUTION	Caution messages indicate a potentially hazardous situation, which, if not avoided, could result in death or serious injury. All caution messages feature a standard ISO safety alert symbol followed by the signal word CAUTION in capitalized black lettering on a yellow background.
CAUTION	Caution messages that do not include the ISO safety alert symbol indicate a potentially hazardous situation for the machine only, which, if not avoided, could result in damage to the machine. All caution messages include the signal word CAUTION in capitalized black lettering on a yellow background.
NOTE	Note messages provide information, such as reminders, general information about a previous statement, or additional guidelines that do not fit into the flow of the preceding text. All note messages include the signal word NOTE in capitalized white lettering on a blue background.

Hazards and warnings

ELECTRICAL SHOCK HAZARD

Do not connect or disconnect wiring while the power is on. Before servicing, disconnect all power to the equipment.

WARNING

SUDDEN MOVEMENT HAZARD
System may start unexpectedly upon application of power. Unpredictable equipment operation may result in death or serious injury.

ELECTRICAL SHOCK HAZARD

Savaria Concord Lifts, Inc. is not responsible for any modifications of the product made by the user.
Do not allow unqualified personnel to use equipment. Failure to comply could result in death or serious injury.
Maintenance, inspection, and replacement of parts must be performed only by authorized personnel familiar with installation, adjustment, and maintenance.
Do not remove covers or touch circuit boards while the power is on.

WARNING

FIRE HAZARD
Do not use an improper voltage source.
Verify that the rated voltage matches the voltage of the incoming power supply before applying power.

WARNING

Make sure the building ground is connected to the controller ground bus before turning the disconnect on. Improper or no ground can result in shocking hazard and unsafe operation.

DANGER

HAZARD WARNING
Be aware that during the installation, service and maintenance of this equipment, you could or will be exposed to unsafe crushing, shearing and falling hazards.



Revision history of this guide

- October 13, 2011 - Initial release
- January 12, 2012 - Updated controller connection diagram on page 27; Updated landing connection diagram on page 42; Updated STEP 19 page 37; Updated Figure 72 on page 39 to clarify cam position; Added NOTE that car top end of traveling cable is pre-wired in STEP 25 on page 48; Updated sub-step 2 of STEP 25 on page 48; Updated STEP 26 on page 50 (added important notice regarding jumpers on J13)
- March 19, 2012 - Revisions on pages 27 and 65 due to controller board silkscreen update and TC connections; Indicated sling cross-braces for non-HD units only
- August 27, 2012 - Added CAUTION regarding bleeder screw on page 17; Revised drawings on page 26 and 41; Added new sub-step 4 to STEP 20 on page 41; Revised drawing of pit switch on page 42; Added flat traveling cable information on pages 47, 49, 50; Added new STEP 38 to program COP position indicator (if required) on page 83; Added new STEP 39 to program hall call position indicator (if required) on page 84; Revised STEP 25 on page 48 - car top box installation; Revised STEP 26 on page 50 - traveling cable installation
- February 19, 2013 - Added disclaimer above; Revised Steps 11 and 12 on page 27; Added note to illustration on page 30; Added cam placement instructions on page 39; Revised landing connection diagram on page 43; Revised pit switch connection on page 44; Added note to install light screens on cab walls before building cab on pages 44 and 89; Revised car top board drawing on page 50; Added note re: P-Tool on page 105; Added Appendix D Maintenance
- April 26, 2013 - Revised Set Safeties procedure on page 35; Revised Porta Gate Operator schematic on page 66; Added new step to Maintenance on page 111; Added new Appendix E - 110V Gate Operator
- August 19, 2013 - Revised drawings on pages 19, 22, 24, 26, 35 and 37; Added note re: grounding on pages 26, 50, 51, and 52
- February 4, 2014 - Added note to clean/inspect tank before adding oil in Step 9 on page 25; Added CAUTION to ensure pipes/hoses are clean before making connections on page 31; Revised drawing on page 42; Revised EPV-4/7 valve default settings on page 81; Added NOTE to Appendix D on page 111 re: extended period of shutdown
- March 27, 2014 - Revised Figure 53 on page 26 (silkscreen for connector in top left corner of board); Added NOTE to STEP 19 on page 36 and revised Figure 69 on page 37 (tape reader); Added photo of bottom cam and magnet placement on page 39; Added magnet template drawings on pages 40 and 41; Revised sub-step 15 of STEP 22 on page 47; Added a note to sub-step 15 of STEP 22 on page 47; Revised sub-step 3 of STEP 25 on page 49; Revised Figure 92 on page 50; Added NOTE to Appendix B Cab Assembly on page 89 and to drawings on pages 91 to 103
- May 23, 2014 - Revised sub-step 15 of STEP 22 on page 47; Revised sub-step 3 of STEP 25 on page 49; Revised Figure 92 on page 50; Revised Figure 92 on page 50
- August 13, 2014 - Revised note and added illustration showing cab with light screens on page 89
- October 28, 2014 - Revised flow chart on page 9; Revised Figure 53 on page 26; Added new light screen installation procedure on page 44; Revised Figure 93 on page 51: Revised STEP 34 on pages 80 to 83; Revised STEP 36, sub-step 1 on page 85; Revised STEP 38 on pages 86 to 88; Added new substep 5 to STEP 40 on page 90
- November 7, 2014 - Added Important notice regarding Applicable Codes on page 3
- February 9, 2015 - Added new drawings for valves on pages 33 and 34; Revised Figure 77 on page 49; Added Safety Testing Procedure on page 96
- April 6, 2015 - Revised Figure 53 on page 27, Figure 55 on page 28 and Figure 57 on page 30
- May 26, 2015 - Revised STEP 20 on page 47 to add grounding step; Added new substep 5c re: grounding on page 74; Added new substep 6 re: grounding on page 76; Added new substep 6 re: grounding on page 79
- September 1, 2015 - Added grounding warning on pages 2, 5, 28 and 81; Added picture to EPV maintenance section on page 88; Revised selector drawing on pages 42 and 43
- November 3, 2015 - Added ground warning label on page 2: Revised pages 63 to 71 to include new Gatemate gate operator
- March 28, 2016 - Revised text in sub-steps 1 and 2 of STEP 12 on page 28; Revised drawings on page 33 and 34; Revised landing connection diagram on page 47; Added note to Gatemate operator board drawing on page 71; Revised car top box drawings on pages 55 and 56; Revised substep 5 on page 94 in LCD programming procedure; Added new Appendix D - Diagnostic Beep Codes on page 120
- October 21, 2016 - Revised car top drawing on page 55
- December 5, 2016 - Revised landing connection drawing on page 47
- March 1, 2017 - Revised STEP 17, page 38 to reflect latest code; Added new STEP 20 - Install floor zone switches on page 47; Revised landing connection drawing on page 48
- April 26, 2017 - Revised STEP 26 on page 54
- May 19, 2017 - Revised Figure 47 on page 23
- January 8, 2018 - Added 2016 code on page 3; Added new controller board connection diagram on page 28; Added cab assembly NOTE re: SOLIDWORKS model on page 52; Added Enterprise gate installation on page 68
- January 12, 2018 - Added step in Maintenance section to lubricate Gatemate bushing and shaft - page 125
- February 23, 2018 - Revised STEP 36 Adjust Valve Speeds starting on page 91
- April 23, 2018 - Revised landing connection drawing on page 49; Revised car top drawings on pages 59 and 60
- April 30, 2018 - Revised car top drawings on pages 59 and 60
- June 14, 2018 - Revised sub-step 4 and added Warning to STEP 3 on page 16; Added Note on page 52 re: steel or glass cabs; Revised LCD icons on page 101
- August 7, 2018 - Added important note re: phone on page 57; Revised programming procedure on page 102
- August 28, 2018 - Added important note re: anchors on page 13
- September 4, 2018 - Revised descriptions on page 91
- October 29, 2018 - Added directional speed curves on page 93
- November 22, 2018 - Revised NOTE on page 20
- November 29, 2018 - Reversed and revised STEPS 3 and 4 (pages 16 to 18)
- April 9, 2019 - Added P/N for optional 3" colour touch screen on page 96; Revised figure numbers in some sections
- June 26, 2019 - Revised drawings on pages 28, 30, 59 and 60 to correspond with latest electrical schematic wiring diagrams
- January 17, 2020 - Added new Appendix G - Savaria Link Option on page 139
- June 2, 2020 - Added 2019 code to table on page 5
- July 30, 2020 - Added danger warning on page 2
- September 3, 2020 - Revised STEP 33 on page 80
- October 27, 2020 - Updated the flow control and rupture valve layouts on pages 35 and 36
- December 1, 2020 - Revised figures 59 and 60 on page 33 to include velocity fuse
- December 3, 2020 - Revised orientation of figures on pages 35 and 36
- January 20, 2021 - Updated timing setting on page 92
- April 8, 2021 - Updated dimensions on pages 6 and 7
- September 1, 2021 - Removed 3" & 5" rule
- November 22, 2021 - Updated pages 60 and 61
- March 7, 2022 - Revised note on page 42
- September 7, 2022 - Revised pages 87-91
- January 15, 2024 - Revised page 123, added revision number
- March 1, 2024 - Revise page 57, added Appendix H
- November 27, 2024 - Revised floor programming procedure on page 97

Job site tools

Tools and materials used during installation:

- Allen wrenches (1/8" - 3/8" Imperial)
- Screwdrivers (slotted, Phillips, Robertson)
- Socket and wrench set (1/4" - 1 1/4" Imperial)
- Needle-nose pliers
- Side cutters
- Pry bar
- Vise-grip pliers (standard and wide-jaw welder's type)
- Rubber mallet
- Box cutter/knife
- File 10" medium cut (for filing joints if required)
- Tape measure
- Carpenter's level and square, 4-foot
- Scratch point awl
- Plumb bob and line
- Chalk line
- Metal and wood stud finder
- Wall anchors
- Reversible hand drill 3/8" (variable speed)
- Concrete drill bits 3/8", 1/2"
- Hammer drill 1/2" (for concrete fasteners)
- Trouble light for hoistway
- Rope 1/2" - minimum length to be as long as the hoistway height
- Extension cord 100 ft (30 m), minimum 14 gauge wire
- Wire puller (50 feet of 1/8" fish tape)
- Wire marker tape
- Wire strippers
- Tie-wraps
- Assorted butt electrical wire connectors and crimping tool
- Electrical box connectors
- Speedy jig
- Strap wrenches or split cylinders (qty =2)
- Volt-ohm (multi) meter
- Stop watch or tachometer (to set final speed)
- Funnel (for filling oil reservoir)
- Safety items: hard hats, safety glasses, steel toe shoes, heavy gloves, safety harnesses, etc.
- Chain hoist - minimum 1/2 ton capacity
- Cable or nylon strap of adequate strength for lifting sling
- Coated steel shims, minimum 4" (100 mm) square
- 32 grade hydraulic oil, maximum 20 gallons (will vary depending on travel)
- Hand dolly
- Scaffolding or ladders and planks for installation of rails and brackets
- Shop vac
- Rags and cleaning solvent
- General purpose grease
- Materials to close off area during installation
- Temporary run buttons

NOTE: Additional tools not listed here may be required.

Check site specifics

1. Prior to delivery, ensure that you have clear access into the building and a clear route to the installation site.
2. For job site verification, use the following information sources:
   - Plan drawings (also referred to as site installation drawings or shop drawings)
   - Written and verbal direction from the customer, electrical contractors, mechanical contractors, inspector, and architect.
3. Carefully check all measurements of the lift hoistway enclosure and compare to the Site Installation Drawings.
4. Verify the following items against the Site Installation Drawings:
   a. Total travel from the bottom finished floor level to the top finished floor level.
   b. Clearance overhead – top finished floor sill to the top of the shaft.
   c. Width and depth of hoistway. Check to ensure hoistway is square.
   d. Pit depth. Check for equal depth and ensure pit is level.
   e. Size and location of landing door or door rough openings.
   f. Location of the machine (pump) room.
   g. Location of the electrical power disconnect switches.
   h. Correct voltage, three-phase or single-phase, and the proper size of wire (verify compliance with local codes).
   i. Ensure the jack unit can be placed in the shaft (clear access to shaft/runway).
   j. Review "Provisions by Others" with the site supervisor.
   k. Check that all walls/barriers surrounding the hoistway area are smooth, solid, vertical and perpendicular to the floor, and the walls are square to each other. It is important that the walls are perfectly level due to tight running clearances.
   l. Check the oil and electrical line sleeves from the machine room to the hoistway.
   m. Confirm the rail support wall is properly installed with adequate backing as per the appropriate drawing.
5. Ensure there are no fire and safety issues. Contact Savaria's *Technical Support* if required.
6. Verify there is adequate lighting at the landings.

Disclaimer

Savaria Concord Lifts, Inc. disclaims liability for any personal injury or property damage resulting from the operation of a product that has been modified from the original Savaria design. No person or company is authorized to change the design of this product without written authorization by Savaria.

Unpack and check shipment

1 Prior to installation, unpack and check the shipment.
2 Check the condition of the shipment for any damage; installing damaged parts can lead to safety violations and void the limited warranty. Contact Savaria's *Technical Support* if any parts are damaged. If possible, take a photograph of the any damaged parts.

Important Safety Information

The following safety instructions must always be followed. Please read and understand this entire Installation Guide before installing the unit. Follow all procedures carefully.

1 Wear proper, safety-approved protection for your head, eyes, hands, and feet during all phases of the installation.
2 Use extreme caution while raising the elevator components into position to avoid personal injury or damage to the equipment.
3 Use extreme care when operating units without panels in place to avoid personal injury from moving parts.
4 Remove power from the drive unit and operating systems when any electrical work or adjustments are being done.
5 To avoid possible electrical shock, do not work on a wet floor or enter an elevator or elevator pit when it contains water.
6 Use only specified anchor fasteners.
7 Never work alone and always be aware of fellow workers and their safety.
8 Do not wear loose-fitting clothing during installation. Shirt cuffs should be buttoned to avoid being caught in moving machinery.
9 Ensure that all electrical and mechanical equipment is properly enclosed.
10 Never place yourself in a position where you may be harmed (i.e., between shear points, under heavy objects, in the path of moving parts, etc.).
11 Never stand directly under the cab or inside the hoistway during testing or when power is being supplied to the cab itself.
12 Shaft doors should be locked or nailed shut any time the area is left unattended.
13 Always practice SAFETY FIRST.

IMPORTANT

APPLICABLE CODES

You must ensure that your installation conforms to all local codes and standards including the applicable electrical, building, and elevator/lift codes.

Each region will use a specific year of the code and it is the responsibility of the installing company to confirm which year of the code is applicable.

For the INFINITY, the following elevator/lift codes apply:

- ASME A17.1-1996, Part 5
- ASME A17.1/CSA B44-2000, Section 5.3
- ASME A17.1/CSA B44-2004, Section 5.3
- ASME A17.1-2004, Addendum 2005, Section 5.3
- ASME A17.1/CSA B44-2007, Section 5.3
- ASME A17.1/CSA B44, Addendum 2008, Section 5.3
- ASME A17.1/CSA B44-2010, Section 5.3
- ASME A17.1/CSA B44-2013, Section 5.3
- ASME A17.1/CSA B44-2016, Section 5.3
- ASME A17.1/CSA B44-2019, Section 5.3

Pre-installation procedures

Connection to the mains

⚠ WARNING

Local codes and regulations may require a licensed electrician to connect to the mains. Check with your local authority before beginning the installation.

Specify where the electrician should install the following items:

1. A fused, lockable, disconnect switch with the proper amperage and voltage supply, as detailed on the Pump Unit Data Plate or the Site Installation Drawings. The disconnect must be fused.
2. A fused, lockable, disconnect switch or breaker for the cab lighting supply. The disconnect must be fused.
3. A pit light switch and receptacle. This is optional but may be required by local code.

⚠ WARNING

Make sure the building ground is connected to the controller ground bus before turning the disconnect on. Improper or no ground can result in shocking hazard and unsafe operation.

Machine room dimensions

Machine room dimensions are shown below.

Figure 1
Machine room dimensions

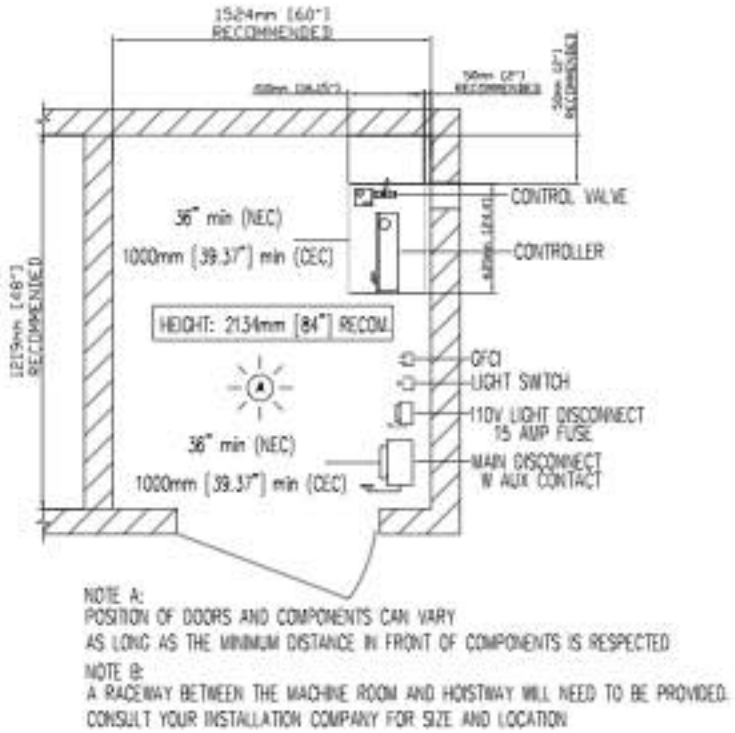

Placement of the controller tank and installation of shut-off valve

The ideal location for the controller tank (see Figure 2 on the next page) is as close as possible to the hoistway.

Do not place the tank in an area where extreme temperature changes may occur. Locate the power unit in an area where temperatures range from 50° F to 120° F (10° C to 49° C).

Controller tank specifications are provided below.

Controller tank specifications	
Dimensions (inches)	H 50" x W 28" x D 17" (Relay Brd) H 57" x W 28" x D 17" (PLC)
Minimum required clearance (inches)	39.37" (1000 mm)
Valve and manual lowering handle location	Inside tank
Rupture valve test	T-fitting factory installed
Tank to controller wiring	Quick connect valve and motor wiring
Controller layout	PLC or Relay Board
Keyed lock to tank	Yes
Machine room required	No*
Tank capacity (gal/ltr)	15-16.5 gal/57-63 ltr
Maximum dry weight (lb/kg)	147 lbs/55 kg
Maximum filled weigh (lb/kg)	312 lbs/117 kg
Operating environment	50°F - 120°F /10°C - 49°C
Operating volume	57 dBA

Figure 2
Controller tank assembly

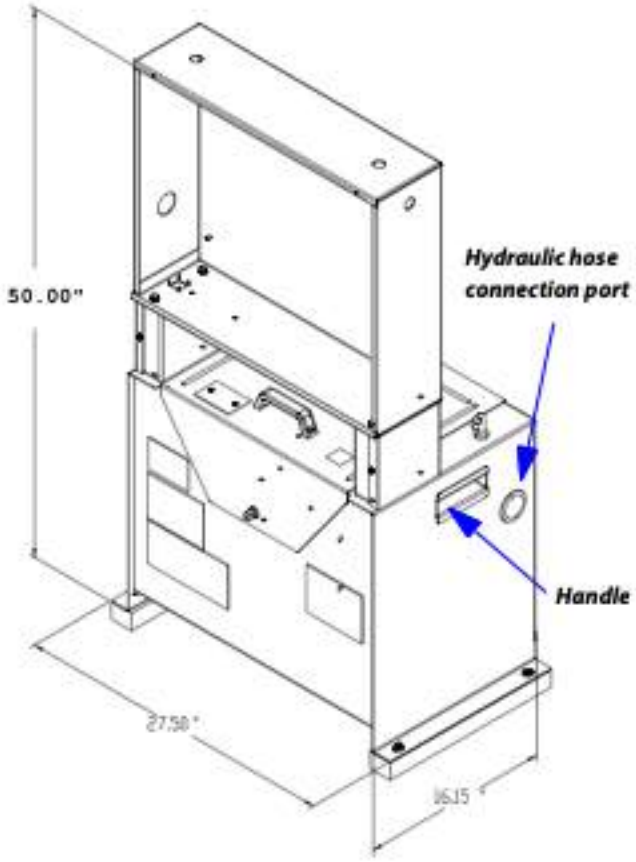

Figure 3
Controller tank, shut-off valve inside (standard)



Figure 4
Controller tank, shut-off valve outside (optional)



IMPORTANT

The controller tank is shipped drained of hydraulic oil and will need to be filled during installation. Always drain the tank before packing and shipping to another location.

The tank is also equipped with a lockable access panel. The key must be left at the site to allow the owner to gain access to the Manual Lowering Handle.

Controller tank features

- Hydraulic hose connection port on both sides of the tank
- Built-in handles on both sides of the tank
- Isolation mounting of pump motor valve assembly minimizes operating issue

Install shut-off valve

Optional shut-off valve kit (201404) with parts to attach to the T-fitting that is pre-installed in the tank. This kit gives you the ability to locate the shut-off valve either INSIDE or OUTSIDE the tank (as required by local code).

Figure 5
T-fitting pre-installed in tank

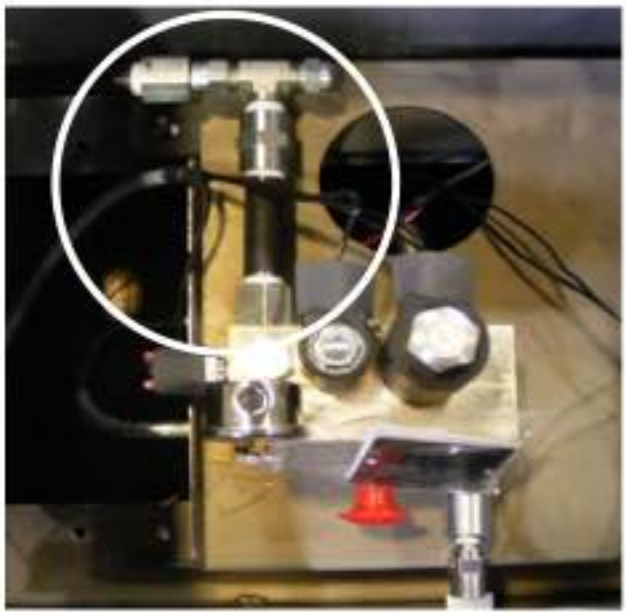

Figure 6
Shut-off valve kit (201404)

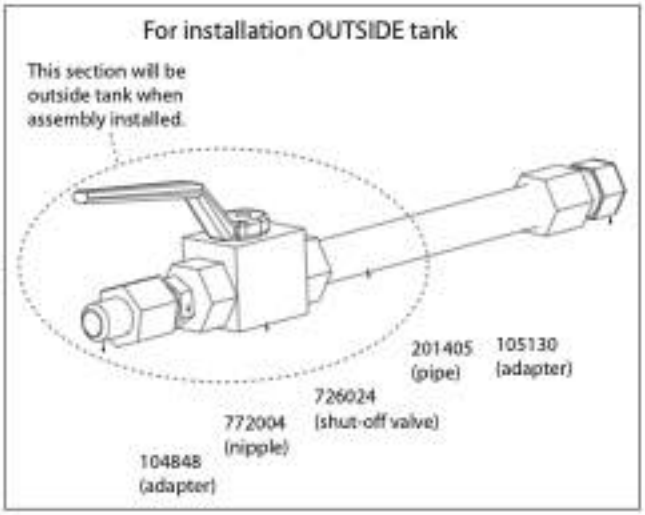

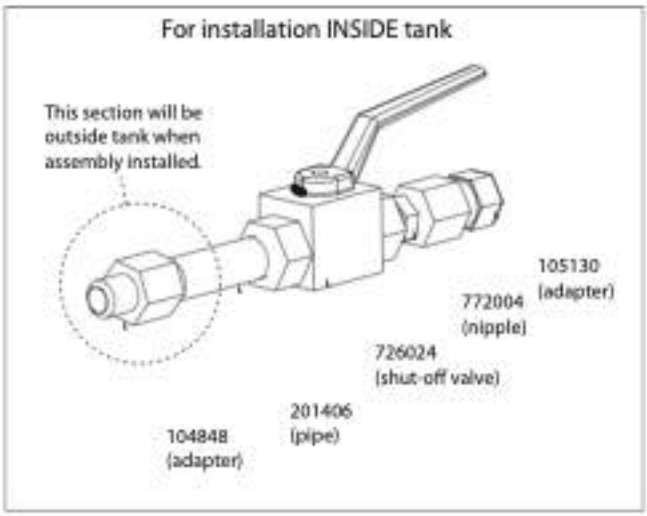

Install shut-off valve OUTSIDE tank

Procedure

Follow these steps to install the shut-off valve OUTSIDE the tank.

1 Use the parts provided in the kit (201404) to build the assembly so the shut-off valve is OUTSIDE the tank. See the top half of Figure 6.

2 Feed the long pipe (201405) through the hole in the side of the tank and use the adapter (105130) to connect it to the T-fitting pre-installed in the tank.

3 Make sure the other side of the T-fitting has a cap.

4 Continue assembling the remaining parts (including the shut-off valve) outside the tank. See Figure 6 (top half) and Figure 8 below. *Note that the shut-off valve handle must face away from the tank.*

5 Connect the hose using adapter 104848.

6 Make sure all connections are secured tightly.

Figure 7
T-fitting in tank



Figure 8
Shut-off valve assembly for OUTSIDE the tank

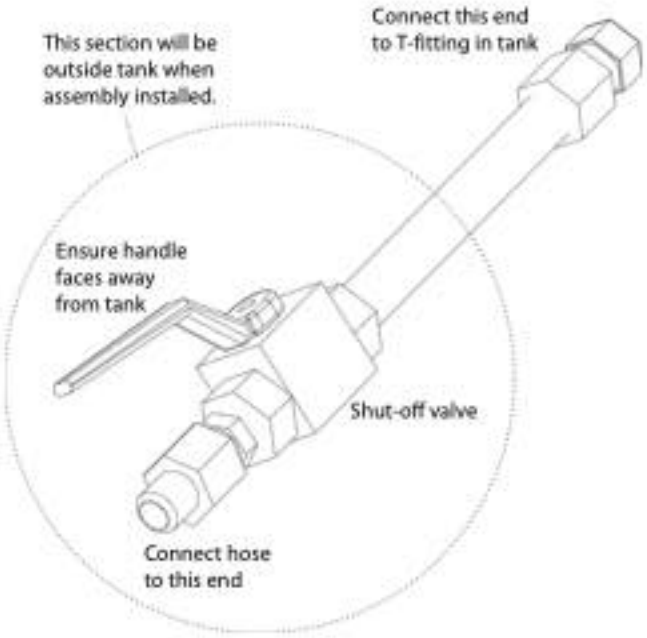

Figure 9
Assembly complete - shut-off valve OUTSIDE the tank

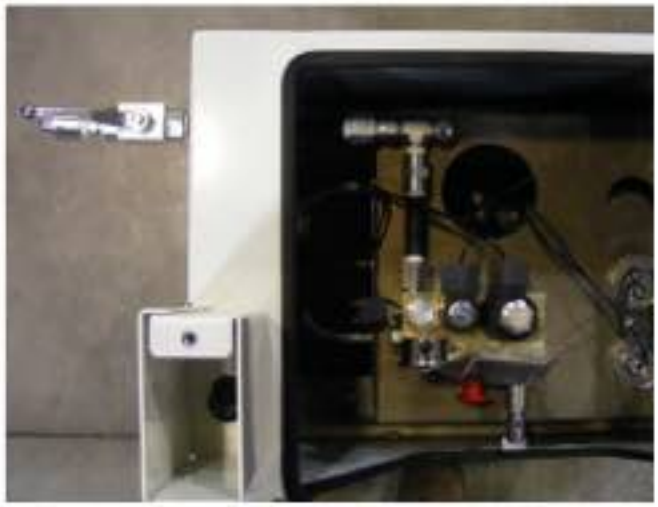

List of installation steps

NOTE

Make sure all pre-installation procedures are completed before performing the following installation steps.

⚠ WARNING

Follow the steps provided to ensure your safety during installation. Failure to follow instructions renders the Limited Warranty null and void. In addition, any party installing the product who deviates from the installation instructions agrees to indemnify, save, and hold harmless the manufacturer from any and all loss, liability, or damage that may occur as a result of the deviation.

The following table lists the installation steps.

Step	Page
Pre-installation procedures - Connection to mains - Install shut-off valve	6 5 7
Verify cab type	12
Install rails	13
Install jack unit and upstand post	17
Assemble split cylinder (if equipped)	18
Install sheave/guide yoke	20
Install buffers	21
Install shoring blocks	22
Install sling assembly	23
Fill oil reservoir	27
Install controller box	27
Install and connect UPS	30
Connect the main power supply	30
Install hydraulic piping or hose	33
Connect temporary run buttons	37
Bleed air from cylinder	37
Install aircraft cables	38
Attach cab floor (platform)	40
Set safeties	41
Install tape and tape reader (selector)	42
Install floor zone switches and cam	49
Install hall calls (landing stations)	50
Install pit switch	51
Install light screens	51
Assemble cab	53
Install car operating panel (COP)	57
Install phone	58
Install car top box	59
Connect traveling cable	62
Install gate pocket	65
Assemble gate	65
Gate operator (Porta or Savaria Gatemate)	70
Install manual gate switch	79
Interlock installation	80
Power up and test elevator	81
Check working pressure and set over pressure relief valve	82
Adjust valve speeds	85
Elevator troubleshooting	93
Test operation	94
Verify automatic cab lighting	94
Program COP position indicator (if required)	95
Program hall call position indicator (if required)	98
Before leaving job site	99
Appendix A Electrical Schematics	101
Appendix B Cab Information	101
Appendix C P-Tool Information	117
Appendix D Diagnostic Beep Codes	123
Appendix E Maintenance	123
Appendix F 110V Gate Operator	124
Appendix G Savaria Link Option	133
Appendix H RATH 2400 Installation and Operation	134

Installation flow chart



Step 1
Verify cab type

Verify the type of cab.

Procedure

Prior to installation, it is important to know what **type** and **size** of cab is being used. This will determine where the rail is to be installed. Refer to your site-specific **Installation Drawings**.

The cab types are as follows (see Figure 10):

- Type 1L
- Type 1R
- Type 2
- Type 3
- Type 4
- Type 5

The cab sizes for the cab types are as follows:

- Infinity (all cab types): 36" x 48", 36" x 54", 36" x 60", 40" x 54"
- Infinity HD (all cab types): 48" x 60"

The maximum load capacity for the cab is as follows:

- Infinity: 1000 lb (454 kg)
- Infinity HD: 1400 lbs. (635 kg)

Figure 10
Cab types

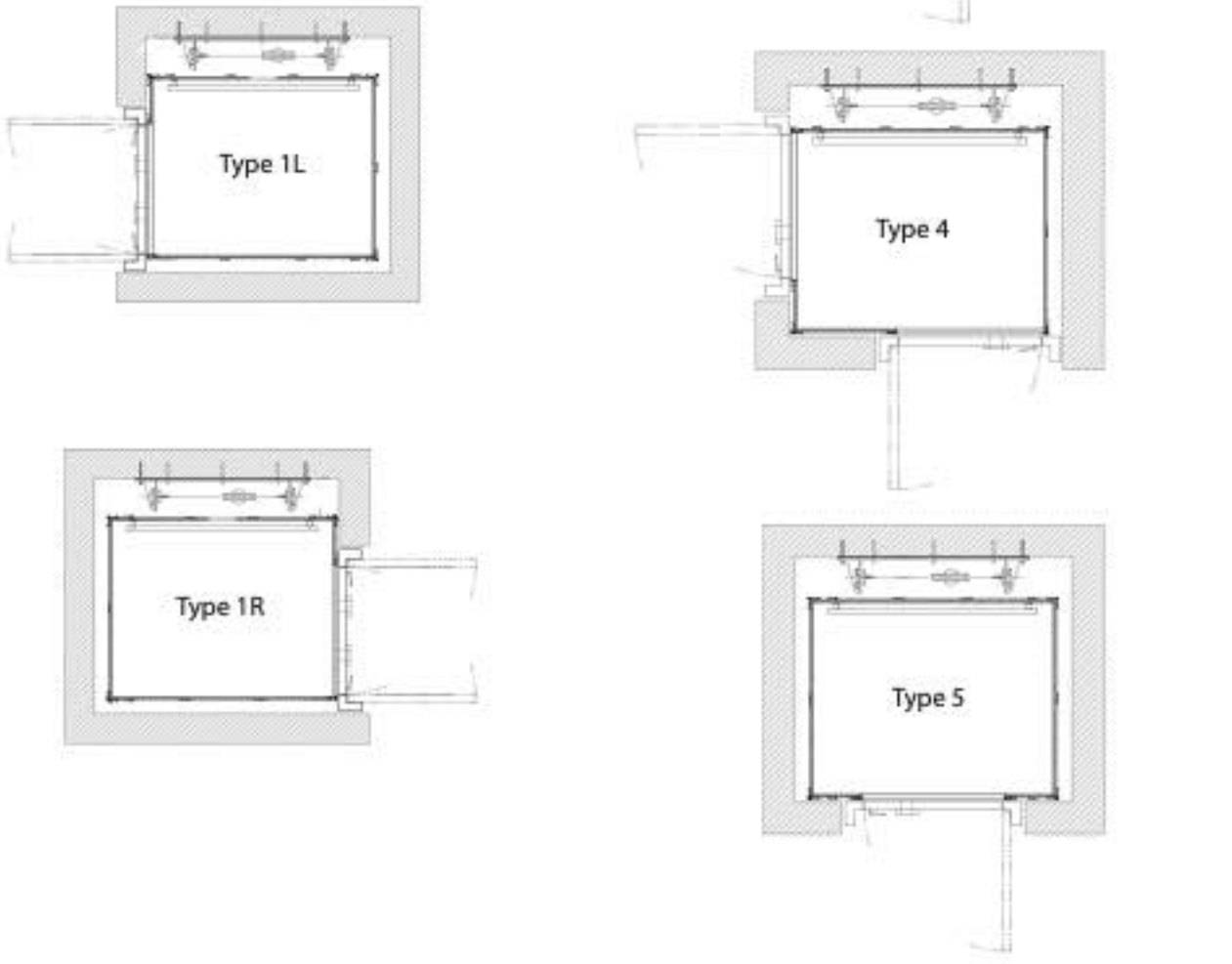

Step 2
Install rails

Install the rails on the load-bearing wall.

Procedure

The speedy jig has been designed to speed up the rail installation process and improve the accuracy of the installation. The jig is adjustable to allow use for the Infinity Standard DBG of 26-5/8" or the Infinity HD DBG of 30". See the photos below showing the two different set-ups.

Tools required – sockets and wrenches (1/4" to 1 1/4"), 4-foot carpenters level, carpenter's square, 3/8" reversible hand drill, 1/2" hammer drill, 3/8" and 1/2" concrete drill bits, scratch point awl, chalk line, two plumb lines, tape measure, four vise-grip pliers, rags and cleaning solvent, and lighting for the hoistway.

Schedule – two installers for 3 to 5 hours.

Note that the leaf brackets are now left - and right-handed. The round pre-drilled opening is to be installed on the rail wall side as shown in Figure 19.

Read these notes and warnings prior to installing the rails.

NOTE

Before starting the rail installation, be sure to clean the rail sections first. If they were shipped with a protective wax-like coating to prevent rusting, this protective coating must be removed. Once the rails are cleaned, check for any burrs or nicks and file as required. Apply lithium grease to the rails when the installation is completed.

NOTE

The importance of installing the rails accurately is critical. The rails must be supported and aligned properly and they must be true and plumb. The overall performance and the ride of the elevator both depend primarily on how well the rails are installed.

⚠ WARNING

Be sure to install the ladders and/or scaffolding to the manufacturer's recommendations. Use extreme care when working at heights and always wear a safety belt.

Figure 11
Speedy jig

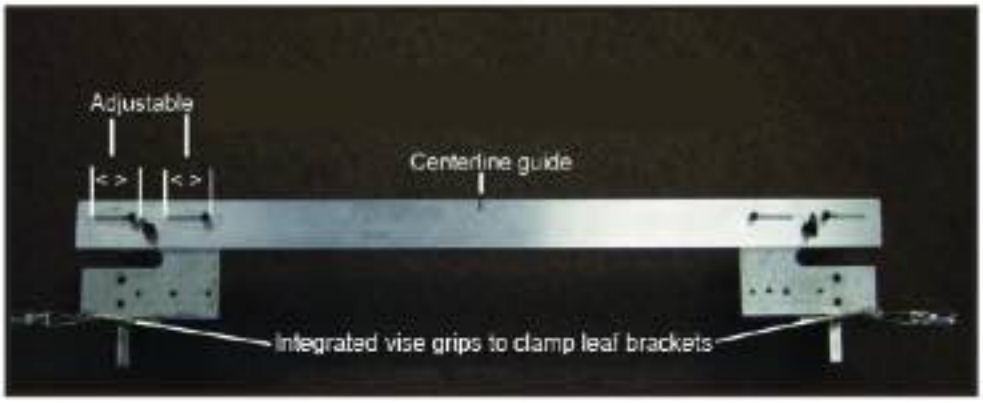

Figure 12
Vise grips clamped to leaf brackets and DBG adjustment

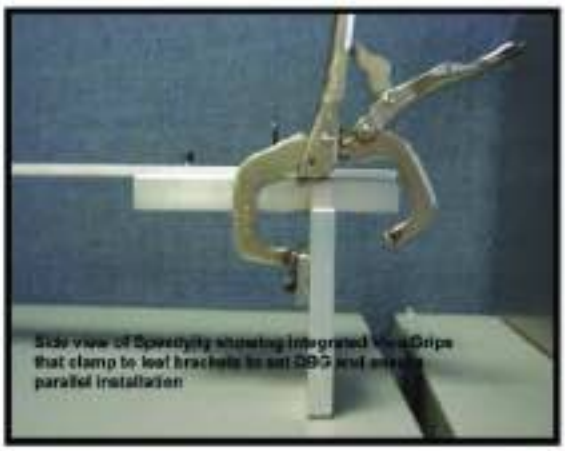



NOTE

In the following rail installation procedure, while one installer is working on steps 6, 12, 13, 14, 15 and 16, the other installer can work on steps 7, 8, 9, 10, and 11.

To install the rails and rail brackets, proceed as follows:

1 Start by plumbing the hoistway to determine the tightest spot in order to establish the running clearances and the overall condition of the rail support wall.

2 Locate the centerline of the rails (see below) as referenced from the "sill line" on the **Installation Drawings** supplied with each elevator.

Figure 13
Sample installation drawing

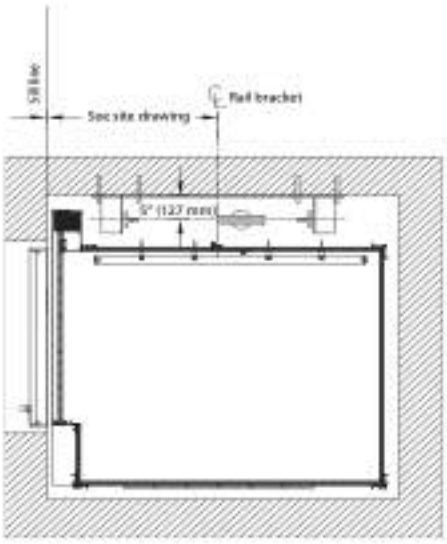

3 Mark the centerline location on the wall and then drop a plumb from this point. Be as accurate as possible here and verify that your measurements are within +/- 1/32". Snap a chalked plumb line to mark the centerline from the top of the hoistway to the bottom.

Figure 14
Rail bracket centerline

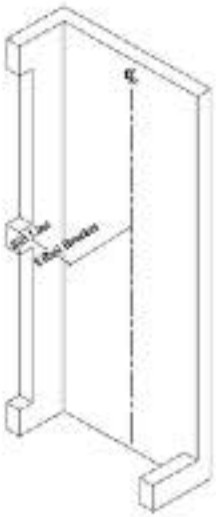

4 Prepare a 4-foot (1219 mm) carpenter's level in the following way to be used as a template to mark the location of the rail bracket holes. Use a small tip, permanent ink marker for this purpose. On the carpenter's level, mark the centerline and the position of each bracket hole to be drilled in the wall. See below.

Figure 15
Carpenter's level

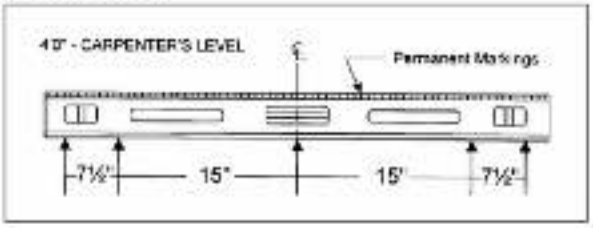

Figure 16
Drilling holes

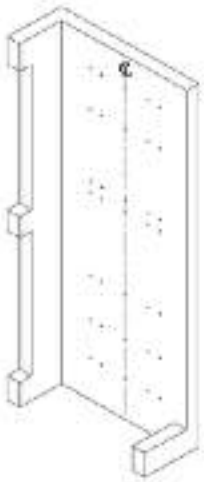

5 Starting at the top of the hoistway, use the prepared 4-foot carpenter's level to mark the position of the rail bracket mounting holes.
   a. Place the marked center point of the level even with the marked center of the rail bracket/cylinder bracket on the wall.
   b. Ensure that the level is "level" and then, mark the location of each rail bracket hole.
   c. Descend to each level and repeat this procedure at each rail bracket location.
   d. The exact number of brackets and their locations are shown on the **Installation Drawings**.

6 Drill holes for each rail bracket. (Wall fasteners may be through-bolts, concrete anchors or lag bolts - for wood walls minimum ½" bolt). Check your **Installation Drawings**.

IMPORTANT

Note that the anchors provided by Savaria are standard/typical anchors and are not suitable for all site conditions. Always make sure the anchors used are proper for the type of wall on site.

7 Completely remove the protective coating from the rail sections and the splice plates. Once cleaned, check the rails for burrs and nicks and file down.

8 Mark a centerline on the back of each rail using a T-square and scribe as shown in Figure 17. This line will be used to align the rail with the leaf brackets using the diamond cutout on the leaf bracket.

Figure 17
Mark centerline on back of each rail



9 **(OPTION)** At this point you can pre-assemble the rail brackets and leaf brackets OR you can complete this step after the rail brackets are installed (step 11) using the hardware provided. Assemble only the adjustable leaf brackets making sure that the brackets are pushed back fully as shown in Figures 18 and 19. **DO NOT** install the rail bracket clips as they will interfere with the use of the rail alignment jig.

Figure 18
Rail bracket installed



Figure 19
Rail bracket and leaf bracket assembled

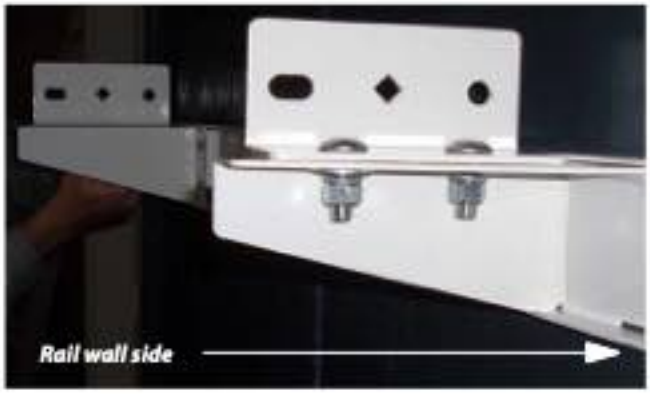

10 After referring to your **Installation Drawings** install the splice plates to the top of each rail section using four of the splice plate bolts, flat washers, lock washers and nuts provided. The bolts need to be snug only as they will be tightened up in the hoistway. **CAUTION:** Remember that you will be installing one rail male side up and the other female side up. Refer to step 19.

11 Install the pre-assembled rail brackets using the wall fasteners making sure that the brackets are level. If through-bolts are used, cut off the excess threaded rod protruding from the rail brackets as shown in Figure 20.

Figure 20
Cut off excess through-bolt



12 Proceed to the top rail bracket in the hoistway and install a plumb line on each of the adjustable leaf brackets, aligning the plumb line with the diamond cut in the middle of the bracket.

13 Install the jig at the top rail bracket as shown in Figure 21 below. Using the built-in vise-grips, pull the adjustable leaf brackets into position making sure that the centerline of the jig corresponds to the centerline of the leaf bracket and the plumb line. Use the diamond in the middle of the bracket for alignment purposes (see Figure 22). Using a tape measure, adjust the jig location to ensure that there is 5" from the back wall to the plumb line **at the tightest point of the hoistway** (see Figure 23).

Figure 21
Install jig at top of rail bracket



Figure 22
Diamond in middle of bracket



Figure 23
Plumb line

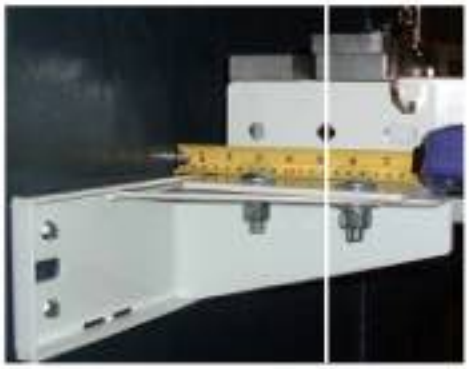

14 Use your tape measure to check the plumb line location relative to the wall at all the other rail brackets. If the plumb line location shows a dimension at a rail bracket of less than 5", you will need to adjust the jig location at the top of the hoistway to ensure a minimum plumb line to wall dimension of 5". Once you have the correct position for the top rail bracket, tighten the leaf adjustment bolts and remove the jig.

15 Proceed to the bottom of the hoistway and install the jig at the bottom rail bracket using the built-in vise-grips to pull the adjustable leafs into position ensuring the centerline of the leaf is in line with the plumb line. Tighten the adjustable leaf bolts and then remove the jig. Using a set of padded vise-grips, clamp the bottom of the plumb line to the center of the bottom adjustable leaf bracket.

16 Proceed up the hoistway using the jig to set all of the adjustable leaf brackets relative to the plumb lines.

17 Set the pit channel in place. Leave the pit channel loose but shim it to ensure it is level. The pit channel should be shimmed over its entire length since it supports the full weight of the lift and its rated load. The center directly under the jack upstand post must be shimmed with steel. **Do not bolt the pit channel into place at this time.**

18 Install the rail clips as shown below, but **do not tighten.**

Figure 24
Rail clips on leaf bracket



Figure 25
Rail clips on rail



19 Stand the first two rail sections in the pit channel. **NOTE:** Install one rail **male side up** and the other **female side up**.

20 Align the centerline on the back of the rail with the diamond cut in the adjustable leaf bracket and install and tighten the rail clips. Care must be taken to ensure that the rail clips are properly seated on the rails.

21 Continue up the hoistway installing the rails, rail bracket hardware, and splice plate hardware. Be sure to snug up the splice plate bolts before tightening the rail clips above it. Check the rail joint with the carpenter's level to ensure the rails are properly aligned in the tongue and groove joints before tightening the splice plate bolts.

22 All rail joints must be tight, clean and smooth, with no overlapping. File as required to ensure smooth joints. **The slightest misalignment here will be multiplied and felt in the cab.** A good rail filing job will smooth the joint. File at least 4" (102 mm) on either side of the joint. **Do not point file at the joint.**

Figure 26
Rail joints

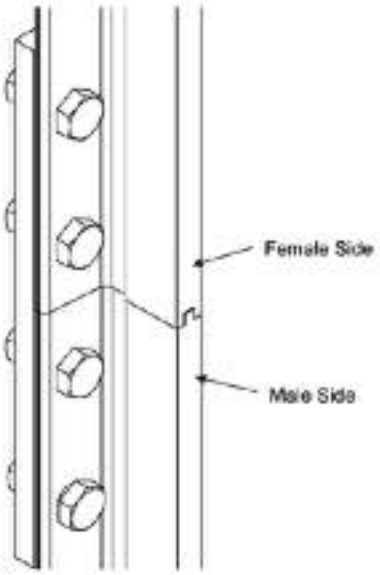

Figure 27
Assembled rails

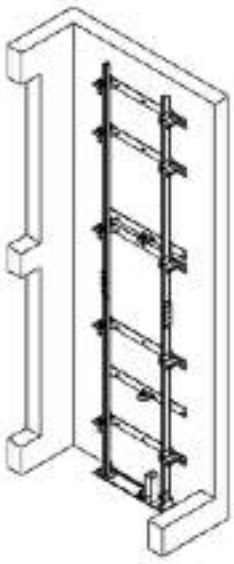

Step 3
Install jack unit and upstand post

Install the jack unit and upstand post.

Procedure

The cable hydraulic system features cables, a sheave/guide yoke and a slack/broken cable safety device.

Care must be taken to ensure that all adjustments of the safety device are properly followed and that the lifting cables are handled according to the specified procedures.

⚠ WARNING

DO NOT put any weight on the jack assembly until both the jack unit and the upstand post are securely fastened to the wall.

To install the jack unit and upstand post, proceed as follows:

1 Place the bottom of the upstand post into the pit channel and secure the top using the jack bracket (see below). **Do not tighten at this time.** See the **Installation Drawings** for exact bracket locations.

Figure 28
Jack bracket

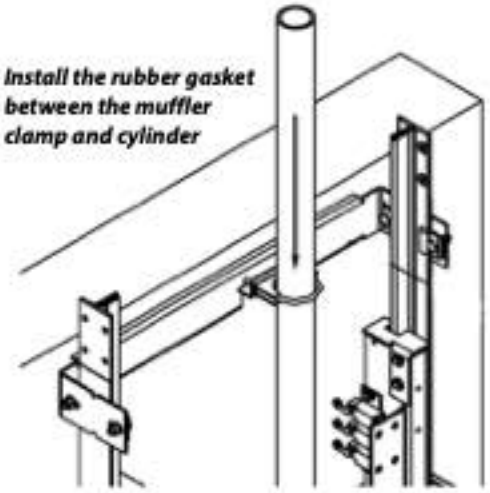

Figure 29
Jack bracket and upstand post

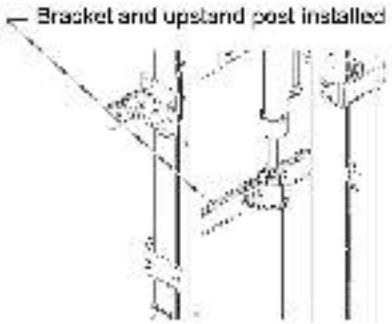

Figure 30
Jack bracket installed

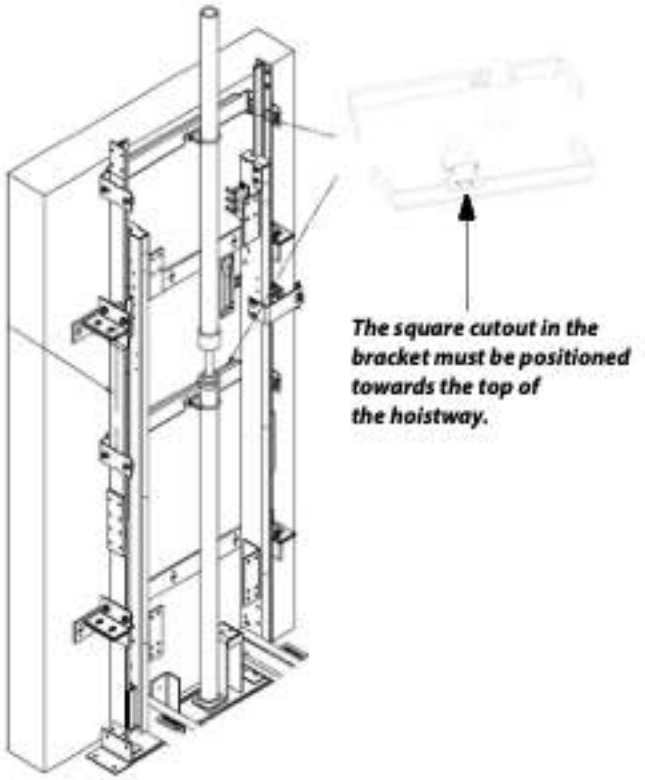

2 To adjust the upstand post to the required height (Figure 31):
   a. Loosen the lock nut at the top.
   b. See the **Installation Drawings** for the **"Adjustable Upstand Setting"** dimension.
   c. Turn the screw until the correct height is achieved.
   d. Finger tighten the lock nut.

⚠ CAUTION

Prior to installing the jack, either remove the bleeder screw or rotate the jack so the screw does not get caught on the rail bracket.

3 Mount the jack unit on top of the upstand post ensuring the male end of the jack's base fits the female socket on the top of the upstand. Secure the top of the jack unit to the rail using the jack bracket supplied. **Do not tighten at this time.**

NOTE

On elevators equipped with a 2" (51 mm) cylinder, the rubber gasket supplied must be installed on the jack bracket between the muffler clamp and the cylinder in order to provide a tight fit. See the Figure at the left.

4 Using a plumb line and carpenter's level, ensure the jack and upstand are in line with each other and vertically plumb. **Slight misalignment can cause undue wear on the seals and an unsatisfactory ride in the cab.** NOTE: The jack centerline is 4-3/8" (111 mm) to the right of the rail/cab centerline.

5 Tighten all jack and upstand brackets.

Figure 31
Detail of adjustable upstand post

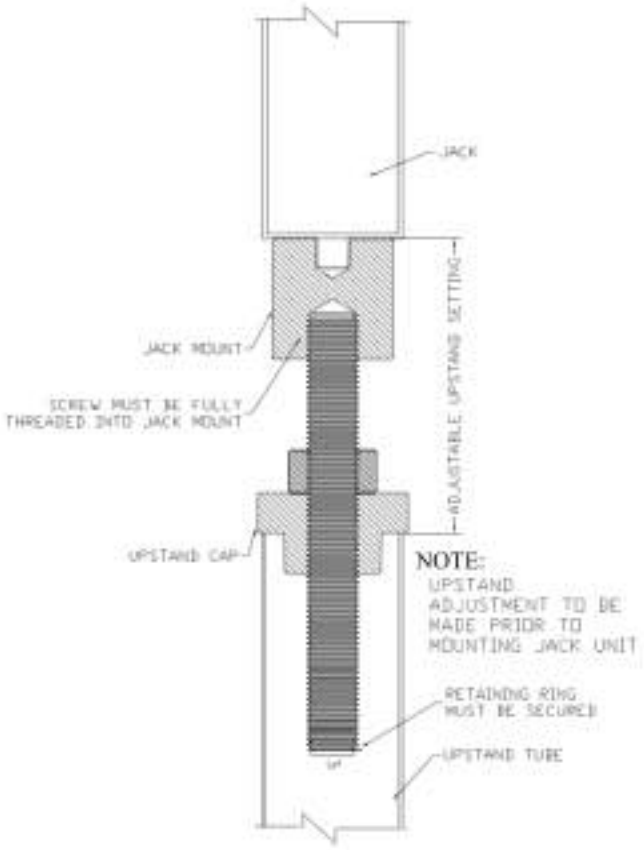

Step 4
Assemble split cylinder (if equipped)

Assemble the split cylinder (if equipped).

Procedure

1 Remove all protective tape that has been applied to the end of the lower cylinder. Pull the plunger out a few feet and remove the last few inches of tape. Then push the plunger back in.

2 Prepare a lifting device to raise the lower cylinder in the hoistway.

3 Lift the lower cylinder to a vertical position (with the exposed plunger facing upwards) and position it on the upstand post. **Loosely** clamp the lower cylinder with one of the two jack brackets to hold it in place.

4 Remove the lifting device from the lower cylinder and connect it to the upper cylinder as described below.

5 For the upper cylinder, the outer cylinder barrel and inner plunger must be lifted simultaneously. Bolt the platen plate on top of the upper piston to prevent the inner plunger from falling through. With a lifting device secured at the top of the outer cylinder barrel, lift the upper cylinder, being careful not to damage the bleeder screw, outer cylinder threads or inner plunger.

6 Remove the protective tape from the upper cylinder and exposed portion of the piston.

7 When the upper cylinder is raised, it should hang perfectly vertical, and the plunger should protrude out the bottom of the cylinder barrel about 6" (152 mm). Raise the assembly about 6" (152 mm) higher than the lower cylinder.

⚠ WARNING

Failure to strap or secure the inner plunger will cause the piston to fall through and this could result in injury or death.

Plunger assembly

1 Be sure to clean the threads and inspect the O-ring on the bottom of the plunger now hanging in the air. Lubricate the threads with "Lubriplate" (white grease) or a similar petroleum-based grease.

2 Slowly lower the upper assembly onto the lower assembly until the threaded portion of the upper plunger makes contact with the corresponding female thread of the lower piston rod. The initial starting of the thread is best accomplished by hand (since damage may be caused if cross threading occurs at the start). When started, protect the surface of the plunger halves.

NOTE

Tools are needed to screw the two halves together. Strap wrenches are the tools of choice.
Never use a chain wrench or a pipe wrench.

3 When the two plunger halves are almost completely screwed together (approximately 1/4 turn from tight), pause for a moment. Rapidly rotate the rods together so that the flat surfaces mate with sufficient force to create a torqued joint.

4 Check the joint and if a lip is noticed, it must always be sanded out until smooth. Refer to the section below, **Sand the Split Cylinder**.

Cylinder barrel assembly

1 With the upper piston now connected to the lower piston, remove the platen plate and bolt. Raise the upper cylinder to expose and remove any remaining protective tape.

2 Ensure that the female threads in the lower half cylinder barrel are clean. Inspect the seal of the O-ring just below the internal threads. With grease, lubricate the female threads and the O-ring, as described previously.

NOTE

To prevent an external leak from occurring, there must be no nicks or scratches in the O-ring.

3 Clean the male threads on the upper cylinder barrel and lubricate with grease.

4 Lower the cylinder barrel of the upper assembly and carefully start the thread engagement into the bottom half. The same care and technique should be used, similar to joining the plunger halves. Once completely threaded together, there should not be any visible threads.

5 **Loosely** clamp the top half of the cylinder assembly with the second jack bracket to hold it in place, and then install the yoke per STEP 5, Install Sheave/Guide Yoke on the next page.

6 Once the yoke is installed (per STEP 5, Install Sheave/ Guide Yoke on the next page) plumb the split cylinder top to bottom and then tighten the two jack brackets holding the cylinder halves in place.

NOTE

Be very careful not to move the split cylinder from its plumb position while tightening the jack brackets.

Sand the split cylinder (recommended)

Materials required

- 80 grit sandpaper, cut into 1" strips
- 120 grit sandpaper, cut into 1" strips
- 150 or 180 grit sandpaper, cut into 1" strips

1 Once the two split cylinder sections are joined together, there may be a visible crack at the joint (see photo at the right). Sand out the crack at the joint as follows:

   a. Cut the sandpaper into 1" long strips.

   b. Beginning with the 80 grit paper, place the sandpaper parallel with the crack as shown in the photo at the right. Slowly move the sandpaper up and down along the cylinder while sanding the crack.

   c. Continue with the 120 grit sandpaper in the same direction.

   d. Finish sanding with the 150 or 180 grit sandpaper in the same direction until the crack is no longer visible.

Figure 32
Crack in split cylinder

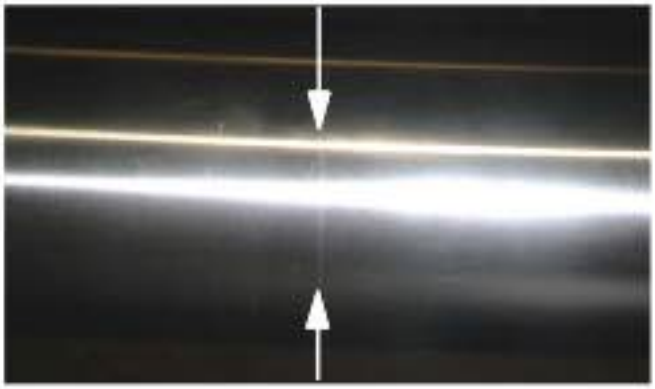

Figure 33
Sanding the split cylinder



Step 5
Install sheave/guide yoke

Install the sheave/guide yoke.

Procedure

The sheave/guide yoke must be installed after the jack unit and upstand post are assembled and while the scaffolding is still in the shaft. **CAUTION: This is a heavy piece. Make sure you have sufficient help to assist in placing the yoke in position. Use a safety line.**

NOTE

To facilitate the mounting of the yoke assembly onto the jack, it is easier to pre-assemble the guide shoes on the yoke before climbing the scaffold.

To install the yoke assembly, proceed as follows:

1 Install the two guide shoes, one on each side of the yoke (pre-pack P/N 207046) and insert the nuts, but do not tighten (see Figure 35 at the right).

2 Loosen the eight nuts and bolts on either end of the yoke to make it easier to squeeze the yoke assembly between the rails.

3 While standing on the scaffold, install the jack platen plate on top of the jack and tighten (see Figure 34). **Note that the square cutout on the jack bracket must face up towards the top of the hoistway.**

Figure 34
Jack platen plate

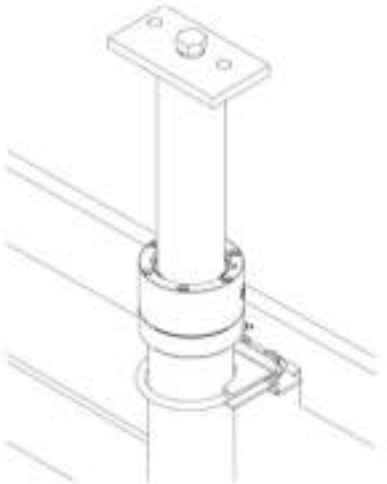

4 Position the yoke assembly on top of the jack platen plate making sure the guide shoes engage smoothly onto the rails and the two bolt holes on the jack platen plate line up. Insert the bolts into the two bolt holes and install the nuts, but do not tighten.

5 Line up the yoke with the centerline of the rails before tightening the shoe bolts and ensure that the clearance between the shoe and the rail is approximately 1/16" (2 mm) on each side. Adjustment is provided on each end of the channel.

Figure 35
Sheave/guide yoke

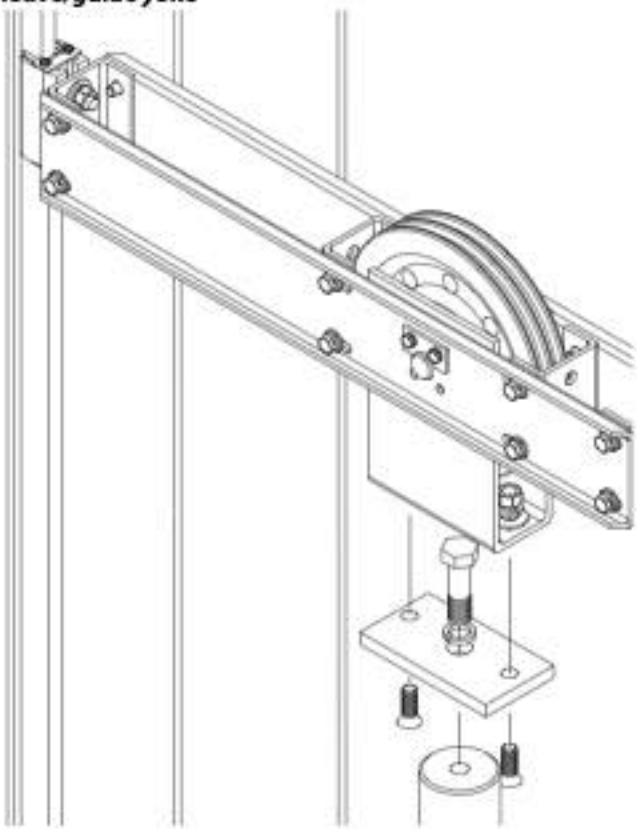

6 Tighten the jack platen plate bolts to the yoke. The inside edge of the sheave should now be lined up with the centerline of the rails and the center of the sheave should be in line with the centerline of the jack unit. **THIS IS IMPORTANT!**

7 Tighten the shoe bolts to the yoke.

8 Ensuring the guide shoes are approximately 1/16" from the rail, tighten the eight bolts on the yoke assembly.

9 Loosen the four bolts holding each of the two small channels inside the yoke (located on either side of the sheave). These channels are designed to prevent the cables from leaving (jumping) the sheave in the event of the cables slackening. Once the cables are in place, these small channels will be re-positioned as close to the sheave as possible, usually within 1/8" (3 mm), and then tightened.

NOTE

For the Standard Infinity, the DBG is 26-5/8" and therefore, the distance inside to inside of the guide shoes should be 26-1/2". It can be a little more, but it should **NEVER BE LESS**.
For the Infinity HD, the DBG is 30" and therefore, the distance inside to inside of the guide shoes should be 29-15/16". It can be a little more, but it should **NEVER BE LESS**.

Step 6
Install buffers

Install the buffers (pit or rail).

Procedure

NOTE

A pit buffer is installed in a shallow pit measuring less than 17". Rail buffers are installed in a deep pit measuring more than 17".

Pit buffers

1 Position the pit buffer so that the two buffer pads line up with the torsion bars on the cantilever arms (Figure 38 at the right).

2 Secure the buffer to the pit floor using the concrete anchors supplied.

Figure 36
Pit buffer

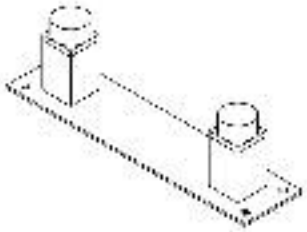

Figure 37
Pit spring buffer

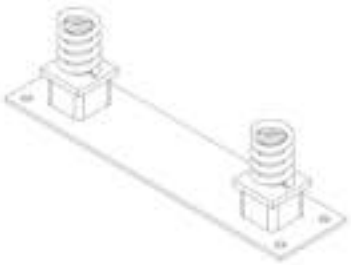

Figure 38
Pit buffer mounted

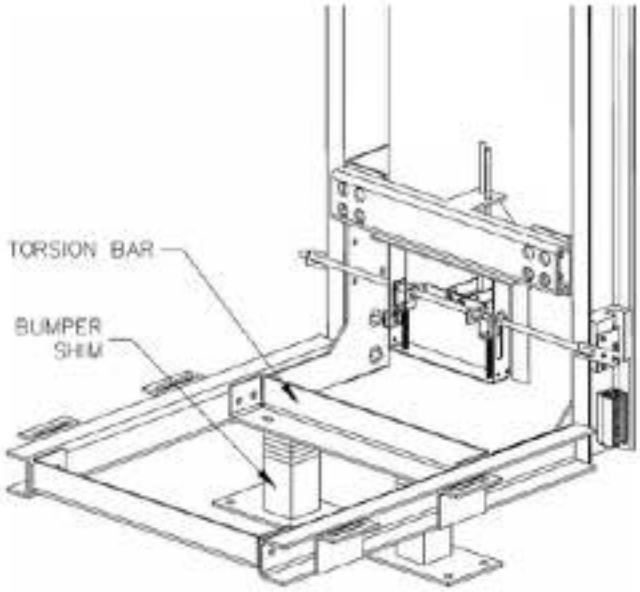

Rail buffers

To mount the rail buffers, proceed as follows:

1 Calculate the following:
   - For Standard Infinity: depth of the pit minus 13.25"
   - For Infinity HD: depth of the pit minus 16.75"
2 Place a level at the door entrance and mark the height (that you calculated above) on the rail.
3 From the mark, measure the total distance calculated in step 1 and drill a 1/2" (13 mm) hole (Figure 41) on the milled rail face.

Figure 39
Rail buffer (left-hand shown)

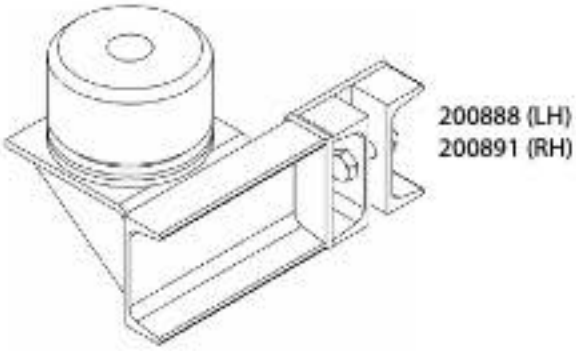

Figure 40
Rail buffer mounted

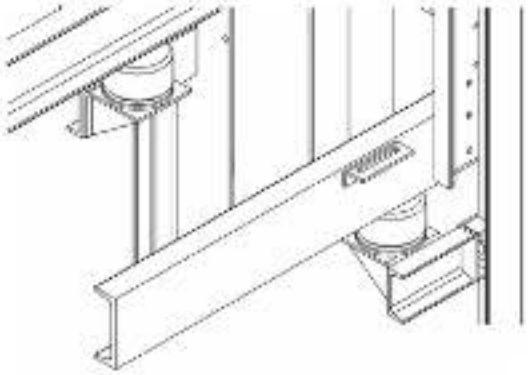

Figure 41
Rail buffer mounting detail

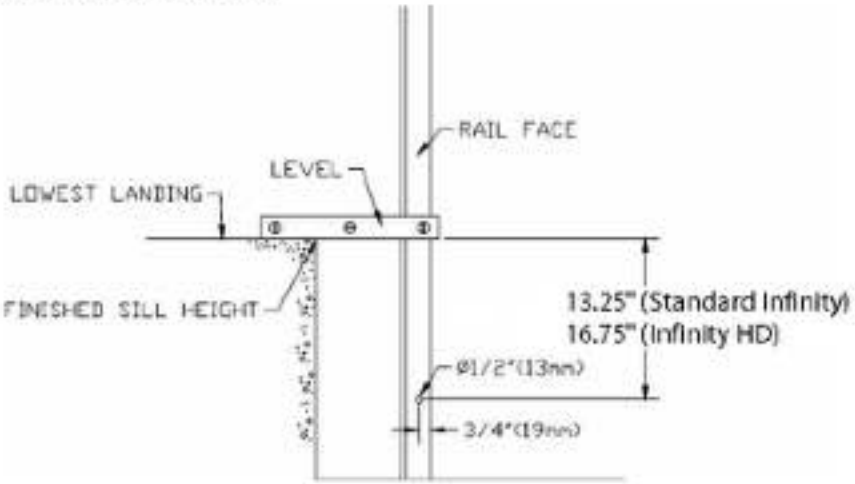

Step 7
Install shoring blocks

Install the shoring blocks.

Procedure

Before working under the platform, install the shoring blocks that have been supplied. The shoring blocks are two pieces of 3" long, 1/4" iron with approximately 2 feet (610 mm) of light chain attached (see below). Position the blocks on the rails and drill two 9/16" (14 mm) holes in the rails for attachment.

Typically, the rail stops are set approximately 4 ft, 6 in. (1372 mm) above the pit floor. The light chain is attached to the wall with a screw. When not in use, the rail stops (with nuts and bolts) hang freely against the shaft wall and are available for use whenever required.

Figure 42
Shoring block

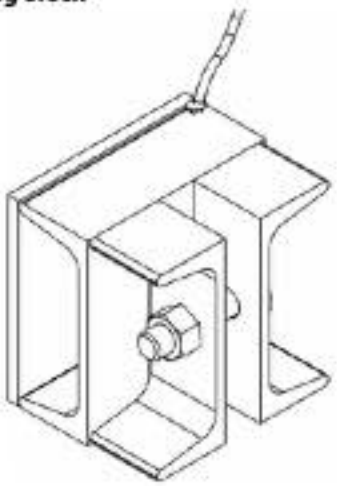

Step 8
Install sling assembly

Install the sling assembly for either the Infinity or the Infinity HD.

Procedure

NOTE

There is a left and a right safety block. Ensure they are placed properly so that as the sling lowers, the knurled wheel is driven up into the wedge.

⚠ WARNING

Remember that the safeties are a life saving device. Install them with due care and attention to detail and workmanship.

To install the sling assembly, proceed as follows:

1 The safety blocks (shown below) are shipped in a small cardboard box, pre-pack PN 220616 (attachment hardware is included). Bolt the safety blocks securely to the stiles with bolts and lock washers. Ensure the proper length bolts are used so that they are threaded at least 1/2" (13 mm) into the safety block.

Figure 43
Safety block (right-hand shown)

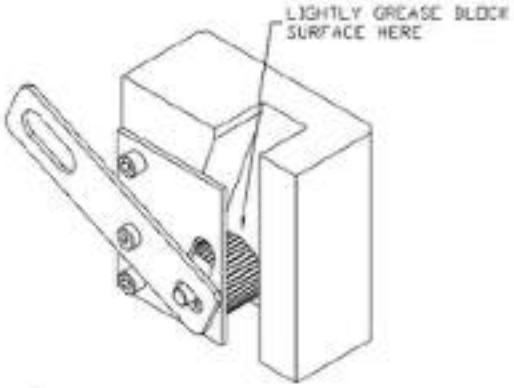

Figure 44
Adjusting safety block

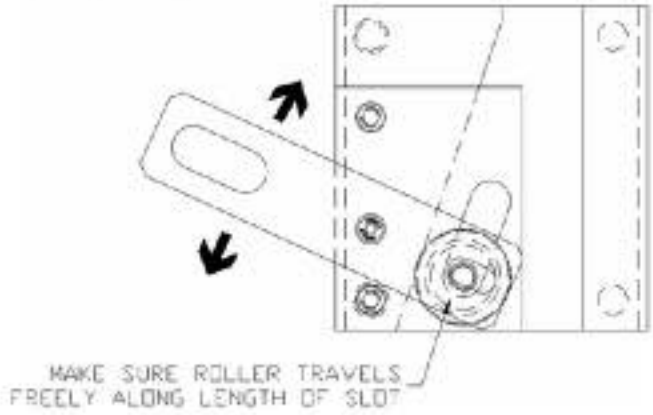

2 Loosely bolt the four guide shoes on the inside of the lift channel uprights (stiles) and position the lift frame (sling) between the guide rails (Figure 45 or 46).

3 Position the uprights on the rails one side at a time, securing each side to the rails.

4 Mount the two torsion bars to the sling (Figure 47 or 48).

5 Mount the spreader channel to the uprights.

6 The cables are normally shipped coiled and tied with baling wire. One end of the cable has a permanent swaged fitting attached and the other end is taped to prevent unraveling. The swaged end attaches to the sling lifting bracket (Figure 49) and the free end attaches to the dead end available on the pit channel.

⚠ CAUTION

When uncoiling the cable, never pull it out by its center. Undo the wire and carefully unroll the cable. NEVER LET THE CABLE BECOME KINKED as this can greatly reduce the safety and life of the cable.

NOTE

The cable has been installed in the sling lifting bracket with two clamps holding the tension of the safety actuating springs. **Do not** remove the holding clamps until ready to start the pump unit and place tension on the cables.

7 Position the lifting bracket (with attached cables) so that the 1/2" (13 mm) hollow rod extends through each safety block actuating lever. See Figure 50. Using eight carriage bolts (pre-pack 201163), attach the lifting bracket to the uprights.

8 With the bracket installed, note that the 1/2" (13 mm) hollow rod extends over to each stile and slightly beyond. The safety block actuating levers slide over each end of this rod and attach to the safety block with the special Allen head screws supplied.

NOTE

At this point, all attachments are loose and it should not be necessary to force anything into place. The shoulder bolts are factory installed and preset, and the tripping levers should be in the UP position and holding the knurled wheel clear of the rails.

Figure 45
Infinity standard sling

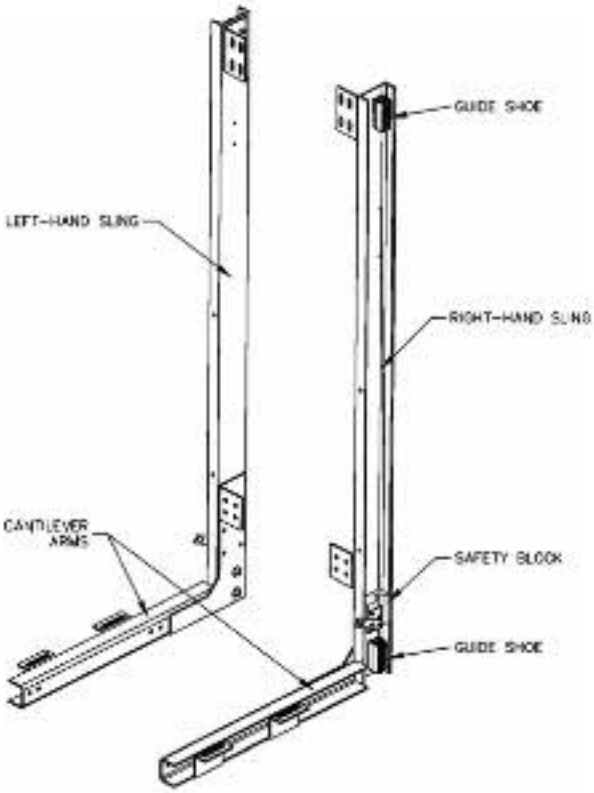

Figure 46
Infinity HD sling

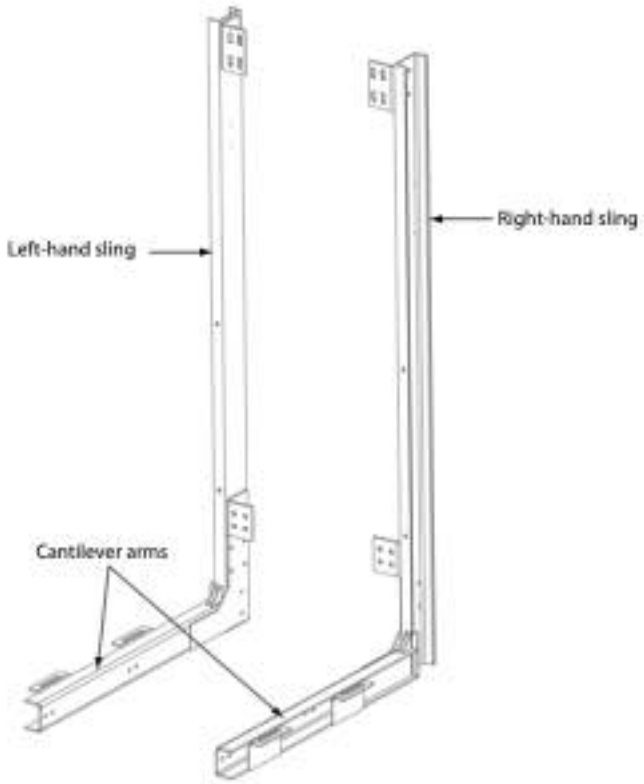

Figure 47a
Infinity standard sling assembly (cab types 1 and 2)

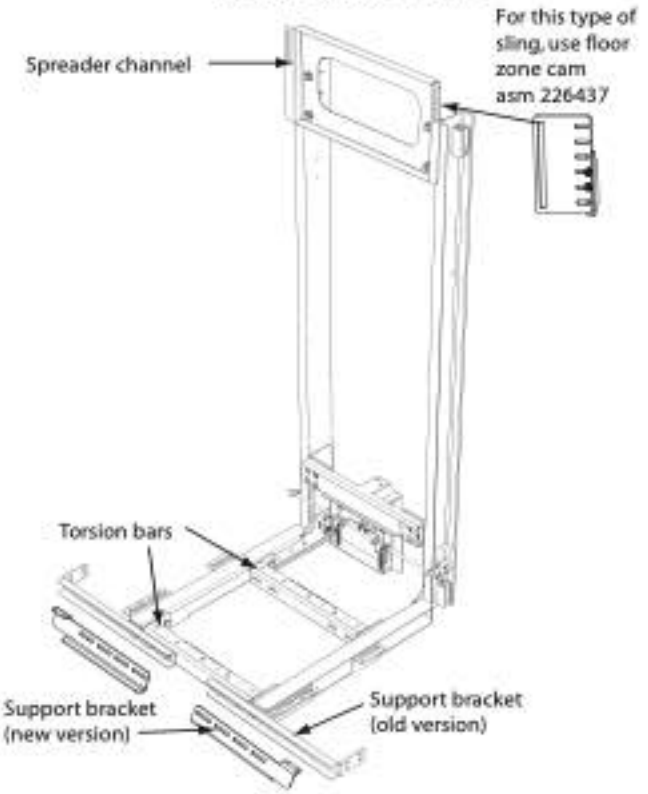

Figure 47b
Infinity standard sling assembly (cab types 3, 4, 5)

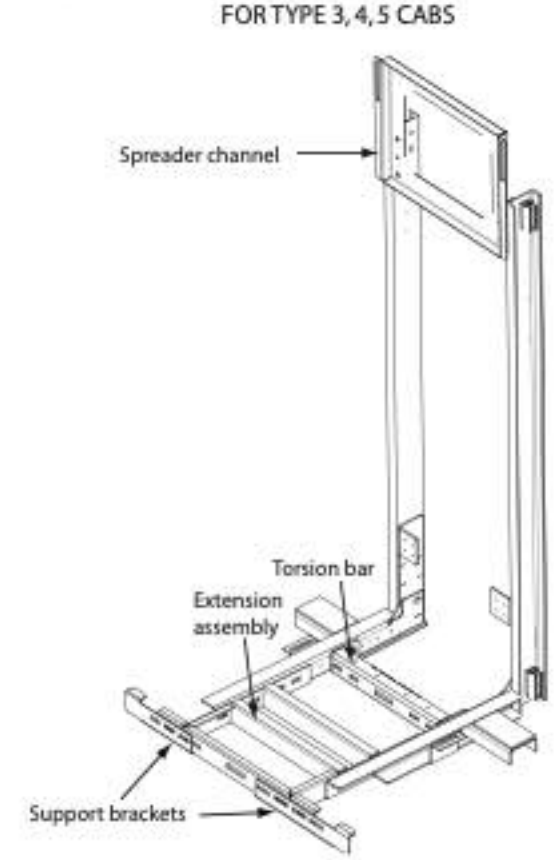

Figure 48
Infinity HD sling assembly

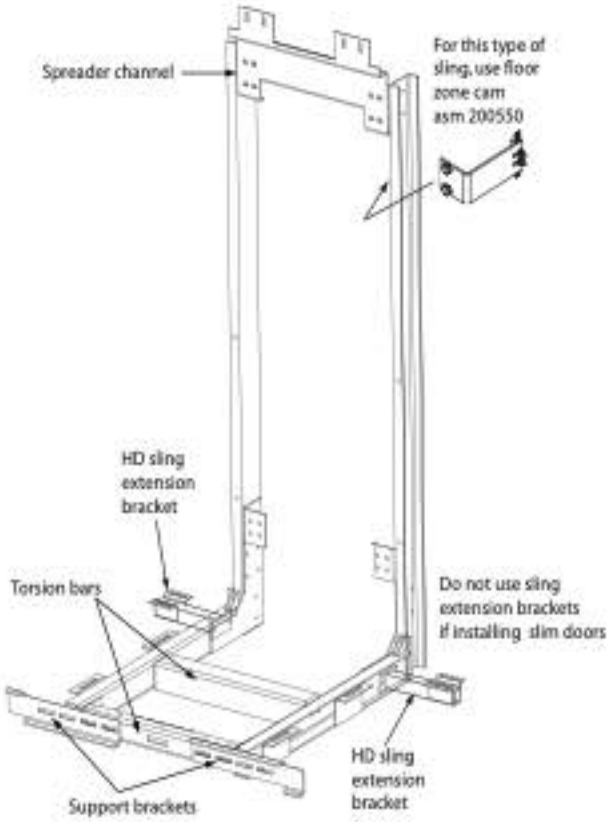

Figure 49
Lifting bracket

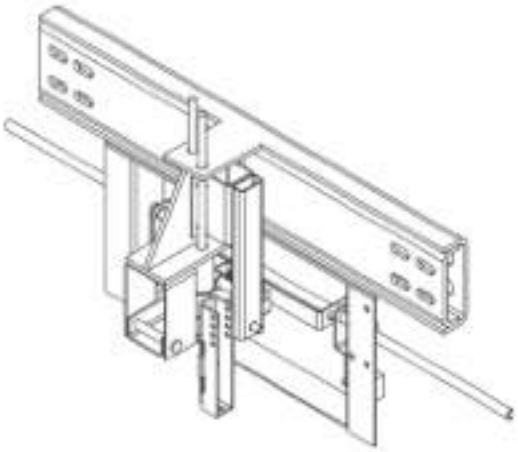

Figure 50
Lifting bracket mounted

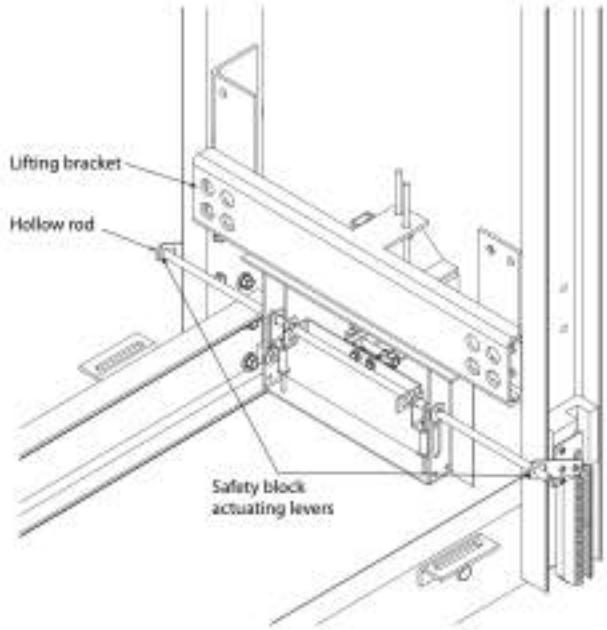

9 Assemble the cab support brackets as shown in Figure 51. All cabs include either left or right support brackets (226628 or 226270).

- If there is only one support bracket, install it on the gate opening side.
- If there are two openings, install support brackets on both the left-and right-hand sides.
- If the cab is larger than 54" but there is only one opening, be sure to install support brackets on both the left-and right-hand sides.
- If the same type of support bracket is used on both sides, flip the second support bracket to install it on the opposite side (as shown in Figure 51 below).

Figure 52 on the next page illustrates the sling assembly for the standard Infinity.

Figure 51
Cab support brackets

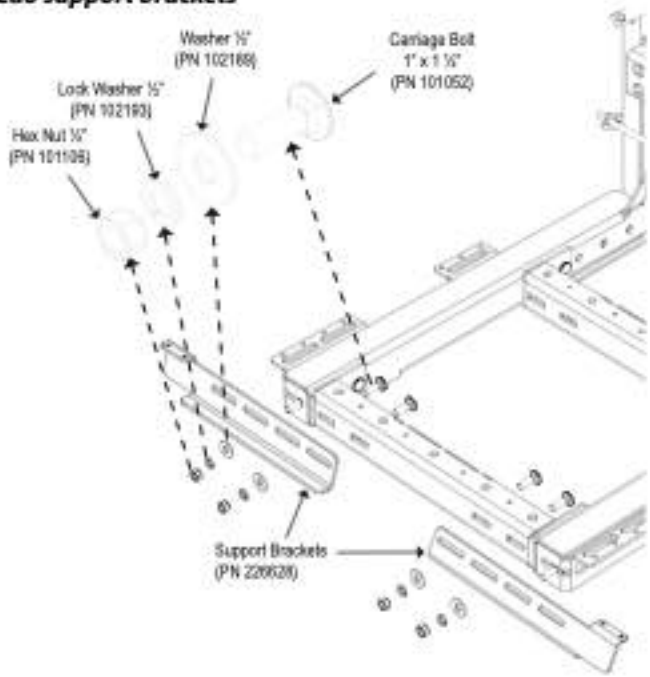

Figure 52
Infinity sling (standard assembly shown here)

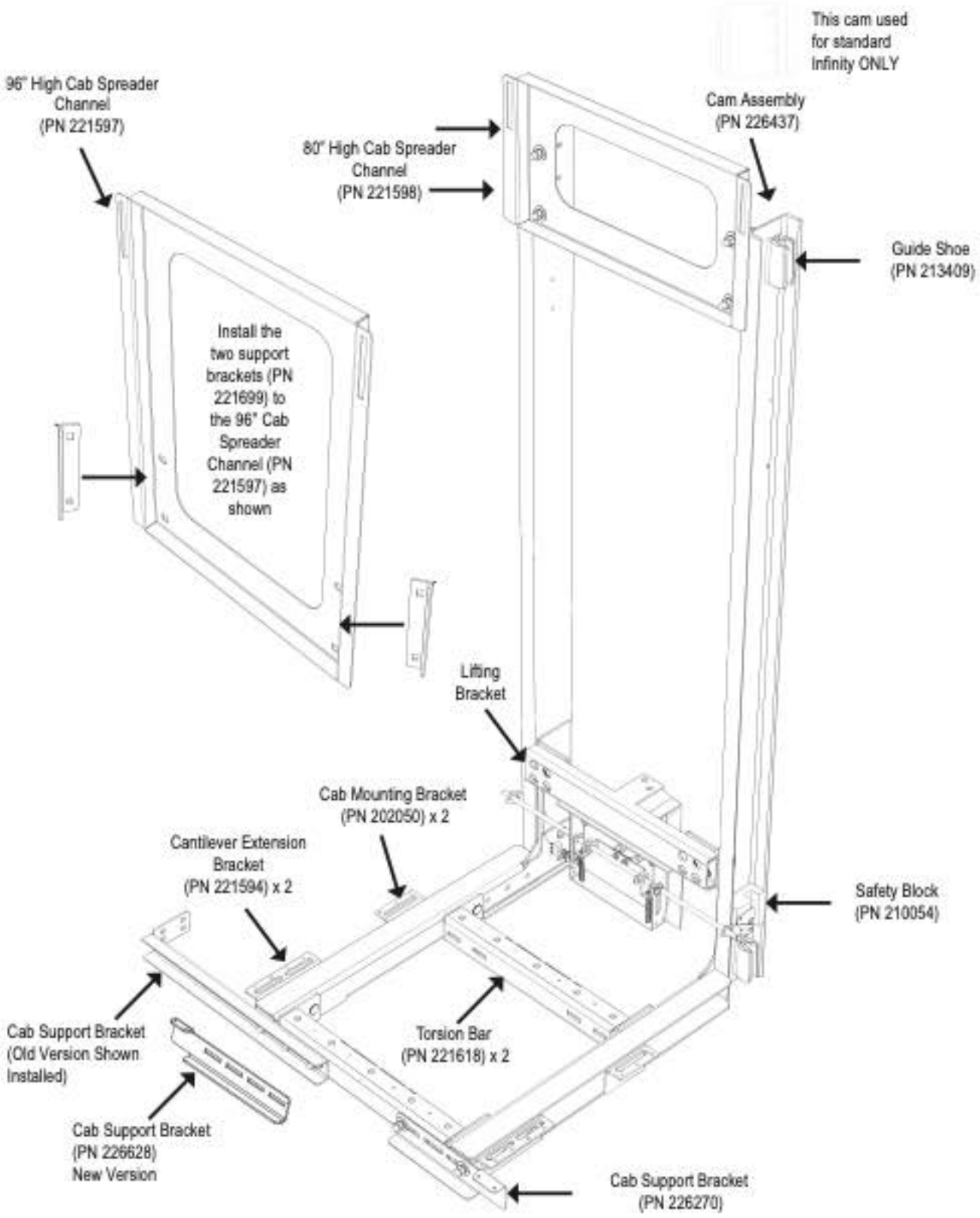

Step 9
Fill oil reservoir

Fill the oil reservoir.

Procedure

⚠ CAUTION

Always add the hydraulic oil to the reservoir when the elevator is at the bottom landing.
Ensure the tank is clean and free of any debris before adding oil.

NOTE

The pump and motor must be totally submerged in oil. Use a 32 weight (grade) hydraulic oil. **NEVER USE OLD OIL.**

The amount of oil required will vary depending on the job. The usable fluid is approximately 20 US gallons (75.7 litres). When filled to capacity, the tank should hold approximately 15 to 16.5 US gallons (57 to 63 litres).

When filling the reservoir, top up the oil until it can be seen in the filter (with the air breather cap removed). Remember that the hydraulic cylinder and oil line are empty and must be filled first when the motor starts up. This will reduce the amount of usable oil for operation when the system is filled. It may be necessary to top up the oil again once the system is filled. The oil should be about 1" to 1-1/2" (25 mm - 38 mm) below the rim of the tank.

The hydraulic system is now ready for start-up. Before starting up, confirm the following:

1 The power supply is properly connected to the correct voltage and phase. Use your meter to verify. Check that proper fuses have been supplied. On three-phase systems, confirm that the pump is turning in the proper direction. Jog the pump, and if no pressure appears in the gauge after a few seconds, reverse any two motor leads on the incoming L1, L2 or L3 power lines.
2 All rails are installed and plumb. All fasteners and anchors are installed and tightened.
3 The upstand post is connected plumb and straight to the special rail bracket.
4 The jack unit is installed and is plumb and straight. The cylinder wall mounting bracket is installed and secure.
5 The guide yoke is lowered onto the jack unit and all attachment plates and bolts are fastened correctly and securely.
6 Sufficient oil is in the reservoir. The tank must be topped up full.
7 A ladder or scaffold is in the shaft and access is available to the air bleeder valve at the top of the cylinder.
8 The main shutoff valve is open.

Step 10
Install controller box

Install the controller box.

Procedure

Mount the controller in a location that provides the following conditions:

- Adequate support for the weight of the controller. The controller is shipped with brackets to allow it to be mounted on top of the controller tank but it can be removed and mounted to properly reinforced walls. If mounted to the hydraulic unit, be sure to secure it in place with the bolts and nuts provided.
- Adequate lighting for installation and maintenance activities.
- Convenient access for the routing of required conduits and cables.
- Convenient access to other devices in the machine room.

For improved controller reliability:

- Keep the machine room clean.
- Do not install the controller in a dusty area.
- Do not install the controller in a carpeted area or area where static electricity is a problem.
- Keep the room temperature between 50ϕto 120ϕF (10ϕto 49ϕC) and 95% non-condensing relative humidity. Extended high temperatures will shorten the life of electronic components. Provide adequate ventilation or air conditioning as required.
- Avoid condensation on the equipment. Keep the controller away from sources of condensation and water (such as open windows) as these can create a hazardous condition and can damage the equipment.
- Do not install the controller in a hazardous location or where excessive amounts of vapors or chemical fumes may be present.
- Make sure power line fluctuations are within χ5%.
- High levels of radio frequency emissions may cause interference with the controller micro-processor and produce unexpected and even dangerous results. This could be caused by hand-held communications devices used near the controller.

NOTE

The controller box houses the main controller board. A connection diagram for the main controller board is provided on the next page.

NOTE

Make sure that switch SW1 (located on the bottom left quadrant of the board) is set for GEAR or HYDRO as required for the installation.

Figure 53
Controller board (772390) connection diagram

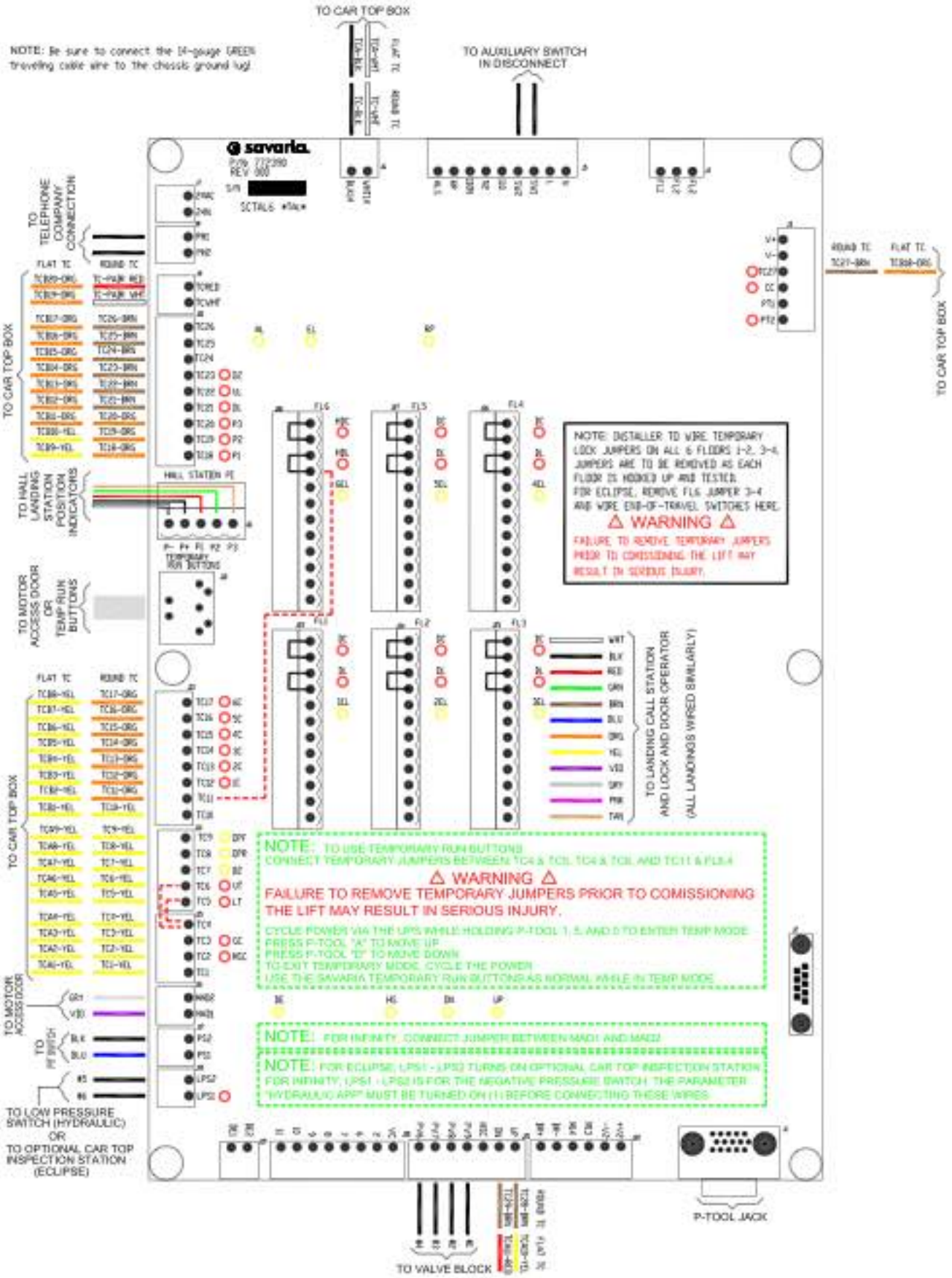

Figure 54
Controller board (772401) connection diagram

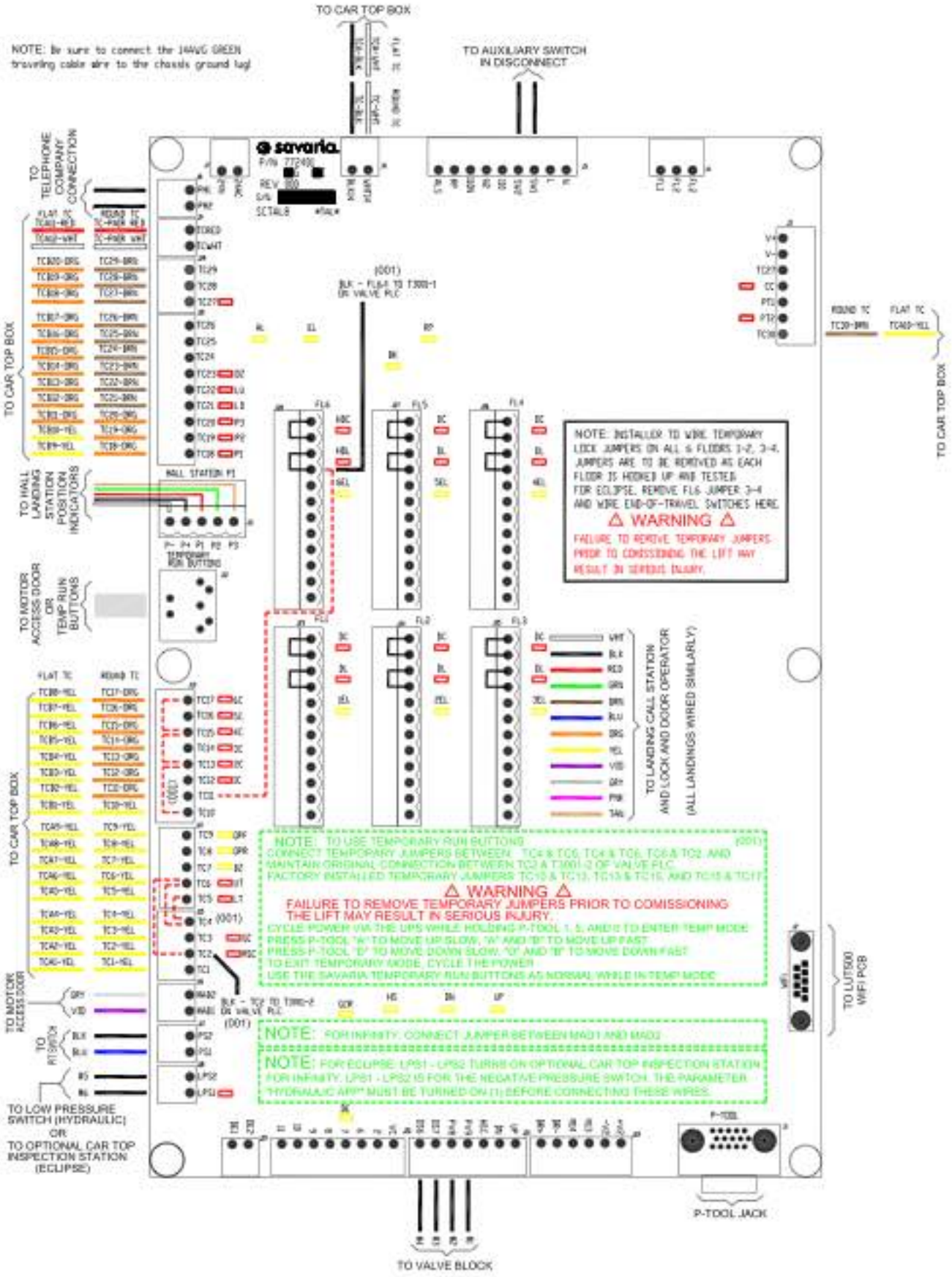

Step 11
Install and connect UPS

Install and hook up the UPS in the controller box.

Considerations

You will need to place the UPS in the bottom of the controller box and plug in the cables.

Procedure

1 Place the UPS in the bottom of the controller box as shown.

2 The cables for the UPS are located in the bottom left corner of the controller box. Connect the cables per the electrical schematics.

   a. Plug the power cord from the UPS into the receptacle marked "UPS PLUG" in the controller box.

   b. Plug the two power cords marked "BATTERY BACKUP RECEPTACLE" into the Battery Backup receptacles on the UPS.

Figure 55
UPS cables in controller box

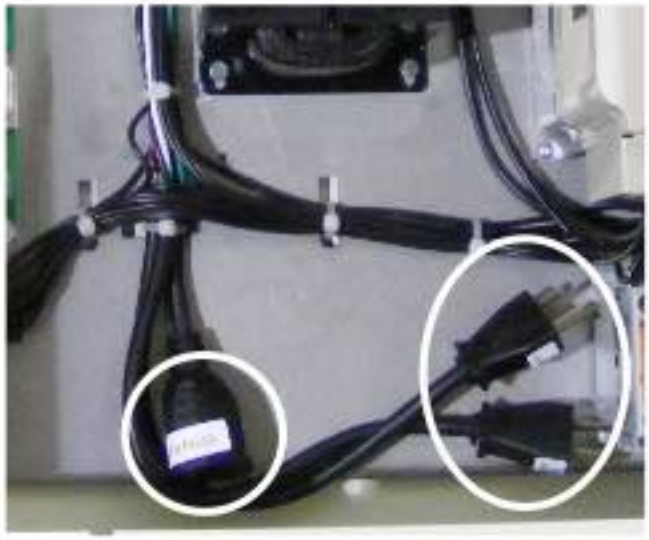

Figure 56
UPS in controller box



Step 12
Connect the main power supply

Connect the main power supply.

Procedure

⚠ WARNING

Local codes and regulations may require a licensed electrician to connect to the mains. Check with your local authority before beginning the work.

NOTE

Machine room connections are shown on the next page. Refer to the Electrical Schematics for all wiring.

1 VALVE CONNECTIONS

- Connect the pre-wired valve wires and the pre-wired low pressure switch wires to the controller per pages 29/30.

2 MOTOR WIRING

- Connect the pre-wired motor wires to the controller per pages 29/30.

3 CONNECTING THE MAIN POWER LINES

- Make sure the power supply is in accordance with the ordered configuration. Connect to screw terminals L1 & L2 (for single-phase), or L1, L2, & L3 (for three-phase), as required. Connect ground to the grounding strip "GND". See the photo after the machine room drawing.

4 CONNECTING THE CAB LIGHTING POWER SUPPLY

- Wire the fused 110-Volt, 15-Amp supply to the Hot and Neutral screw terminals. Connect ground to the grounding strip "GND". See the photo after the machine room drawing.

5 CONNECTING AUX (Auxiliary Contact Switch)

- The National Electrical Code requires that when a secondary power supply or battery is used, the main disconnect must be provided with an auxiliary switch that will open when the disconnect switch is opened. This is a safety device and must be provided by the electrical contractor. Connect the auxiliary disconnect switch to screws SW-1 and SW-2.

NOTE

To ensure proper power supply to the elevator controls, measure the input voltage for the lighting power supply (nominally 110 VAC) and the main motor and controller power supply (typically 220 VAC or 208 VAC). Ensure that the configuration is correct.

⚠ WARNING

Make sure the building ground is connected to the controller ground bus before turning the disconnect on. Improper or no ground can result in shocking hazard and unsafe operation.

Figure 57
Machine room connections

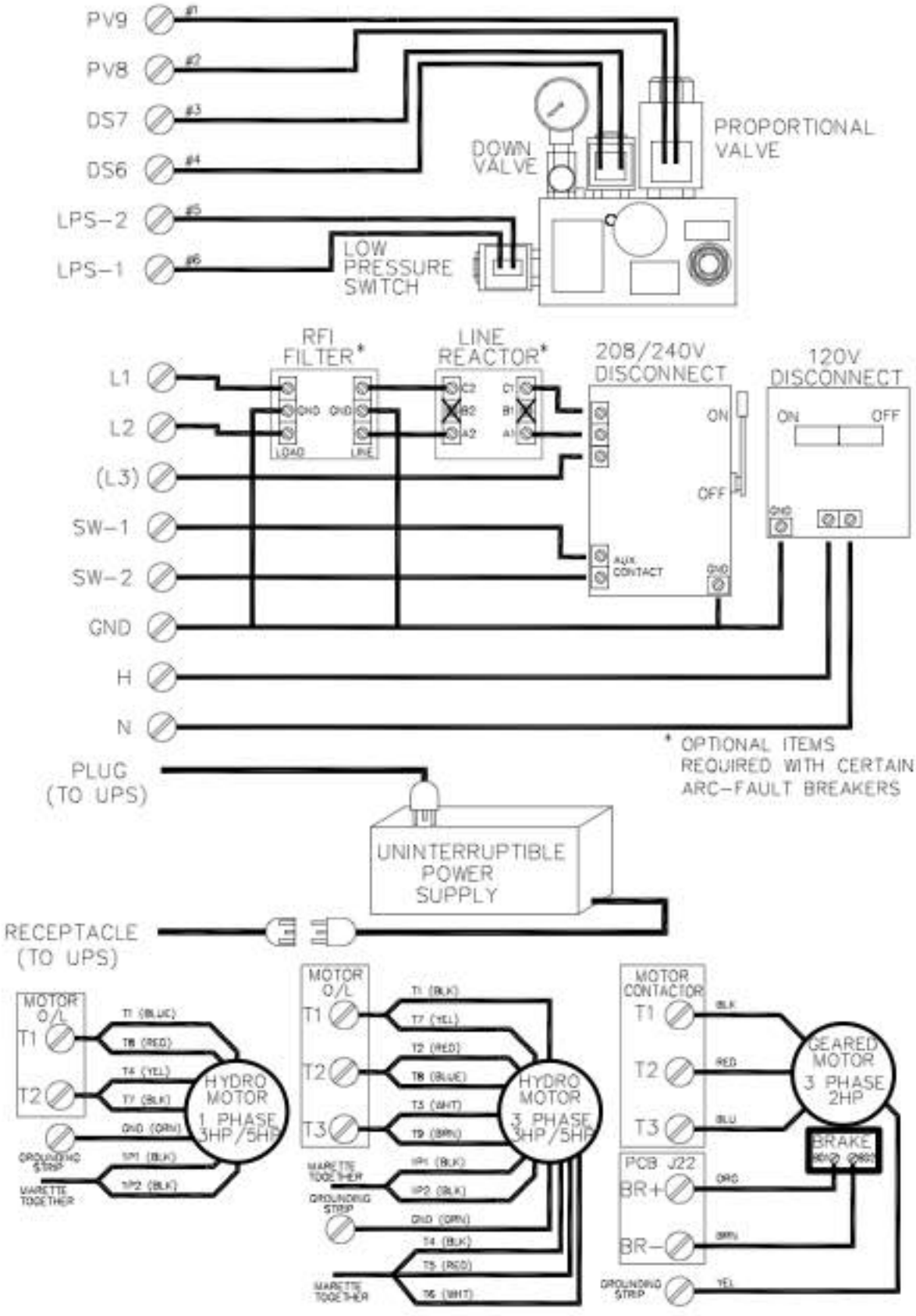

Figure 58
Controller box layout

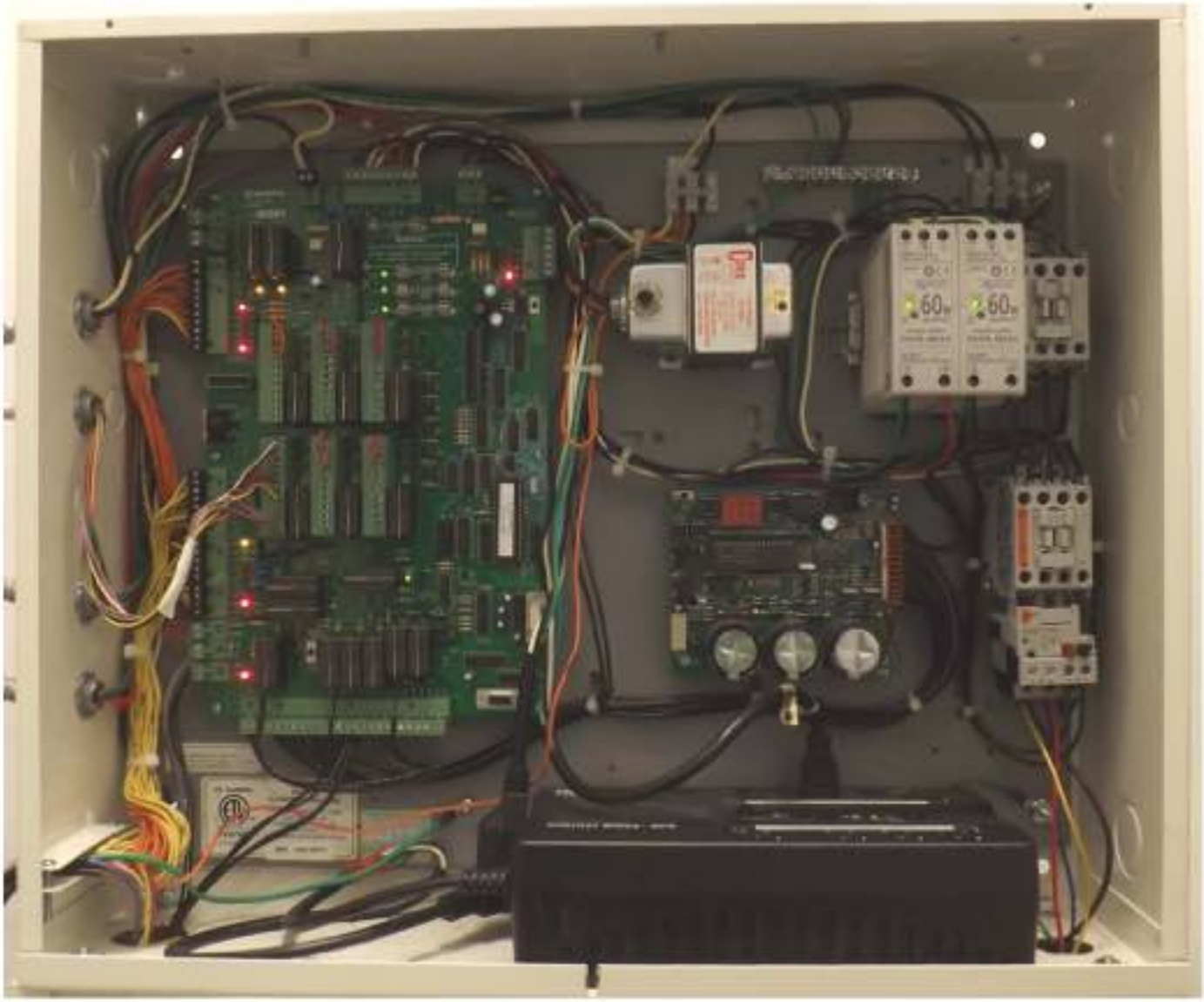

Step 13
Install hydraulic piping or hose

Install the hydraulic piping or hose.

Procedure

NOTE

When the EPV-12 is installed, the oil line must have a minimum ¾" diameter with a ½" diameter NPT adapter at the jack.

Steel piping

Before connecting the oil line, clean it out by placing the jack end of the oil line into a bucket and running the pump enough to flush out a cup or two of oil. **DO NOT PUT THIS OIL BACK IN THE TANK!** Any contamination in the oil will affect the performance of the elevator's speed of travel.

If steel pipe and fittings are used instead of hydraulic hose, make sure the pipe and fittings have the proper rating. Most jurisdictions require minimum Schedule 40 oil line and fittings.

NOTE

When routing the oil line to the hydraulic jack assembly, always minimize the number of 90° bends in the line. Each 90° bend causes pressure loss, increases the noise level and affects the ride. It can also cause the elevator to re-level too often. Instead of using 90° bends, use the proper bending radius for the size of pipe being used.

Insulate the oil line where it passes through the shaft wall to prevent vibration. The code permits the use of hydraulic hose within the machine (pump) room. Install a short length of hydraulic hose from the gate valve on the pump to where the steel oil line starts to pass through the shaft wall. This will help reduce the noise level from the pump/motor operation.

1 The steel oil line must be securely supported to reduce noise and eliminate vibration that may loosen or damage fittings and connections. Support the steel pipe on the upstand post and clip it to the shaft wall using insulating clips (Figure 59).

2 For a 90° elbow, a ½" male NPT to ½" male NPT is suggested. Remember that all fittings must be high strength (minimum Schedule 40).

3 For long runs of pipe, minimize the number of 90° bends by using 45° and 30° fittings wherever possible. Use the chart below as a guide.

Distance (Length of oil line/hose)	Size of oil line/hose
30 feet or less	1/2" diameter
31 to 60 feet	5/8" diameter
61 to 100 feet	3/4" diameter
Over 100 feet	1" diameter

Figure 59
Steel piping

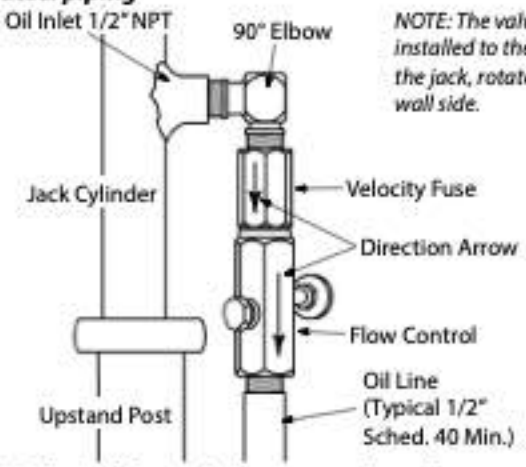

Hydraulic hose (where permitted)

⚠ CAUTION

Flexible hose and fitting assemblies shall not be installed within the hoistway or project into or through any wall (ASME A17.1-2000).

1 If a hydraulic hose is being used as the oil supply line to the jack, install a 90° ½" NPT hydraulic elbow fitting to the oil inlet on the jack. Make sure it points downward toward the upstand post (see below).

Figure 60
Flow control

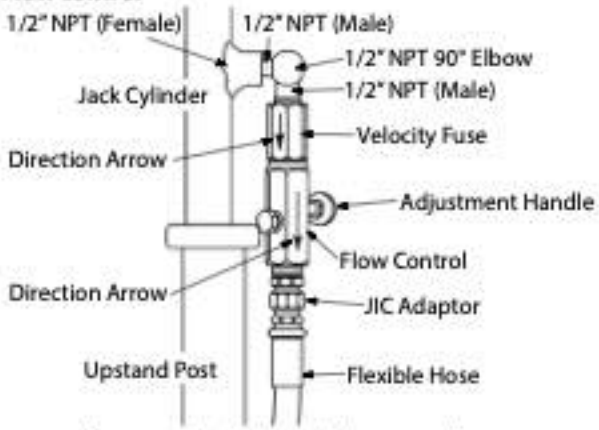

Arrow must point toward the pump unit.

2 Install the flow control valve on the 90° fitting and use Teflon tape to seal the threads. Make sure that the arrow on the flow control valve points toward the pump unit.
   - The purpose of the flow control valve is to prevent excessive speed in the DOWN direction if the hydraulic hose fails or is damaged. **NOTE: It is very important to position the flow control valve correctly. Reversing of the valve will result in very noisy operation of the elevator in the UP direction**. The valve must be positioned to the right of the jack and the jack must be rotated so that the valve is close to the rail wall.
3 Install an NPT to JIC adapter on the end of the flow control valve using Teflon tape to seal the threads. The open end will accept the hydraulic hose. (Thread sealer is not required for JIC fittings where the hydraulic hose attaches).

NOTE

If the flow control or hydraulic hose are not positioned towards the back and right, they may interfere with the sling.

4 Run the hydraulic line from the pump through the hoistway wall. Ensure that it is well protected from scraping or cutting (use a PVC sleeve).

NOTE

Ensure that when the line is bent toward the machine room, the bends do not exceed the manufacturer's recommendations for maximum bending radius, as noted on the hose tags supplied. Use care when tightening the clamps to make sure that the lines are not cut or crimped by the clamp. **Never run the hydraulic hose across the pit floor**.

⚠ CAUTION

Ensure all pipe/hoses are free of any contamination inside before making connections.

5 Secure the oil line to the upstand post with hose clamps (gear clamps).
6 Attach the hydraulic hose to the JIC fittings at the pump and jack. Roll up any excess.
7 Attach the hose tag with a replacement date.

NOTE: The next two pages illustrate the selections for flow control valves and pipe rupture valves.

Flow Control Valve Selections

Flow Control Valve

207114 KIT_PUMP FL-C AND V-F ONLY
201120-2020KIT_3/4" FL-C AND V-F ONLY
207102 KIT 1/2" 180" HOSE W/FL-C V-F
201119-2020KIT_3/4" - 180" HOSE W/FL-C V-F
200614-2020KIT_3/4" - 240" HOSE W/FL-C V-F
200570-2020KIT_3/4" - 300" HOSE W/FL-C V-F

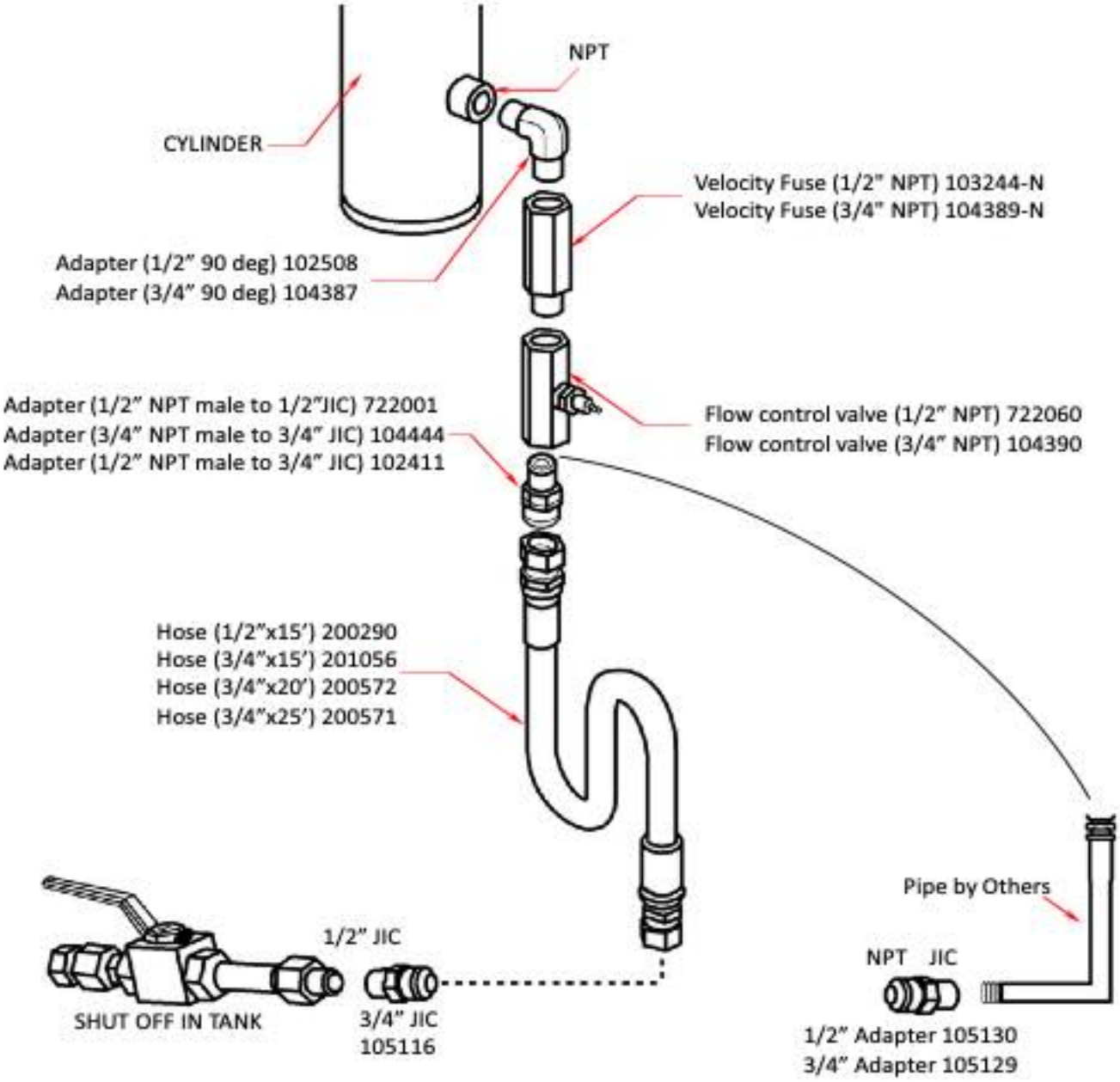

Pipe Rupture Valve Selections

Rupture Valve

207116 KIT_PUMP 1/2" VELOCITY FUSE ONLY
201121-2020 KIT_PUMP 3/4" VELOCITY FUSE ONLY
207108 KIT_1/2" 180" HOSE W/ V-F
201118-2020KIT_3/4" - 180" HOSE W/V-F
200613-2020KIT_3/4" - 240" HOSE W/V-F
200569-2020KIT_3/4" - 300" HOSE W/ V-F

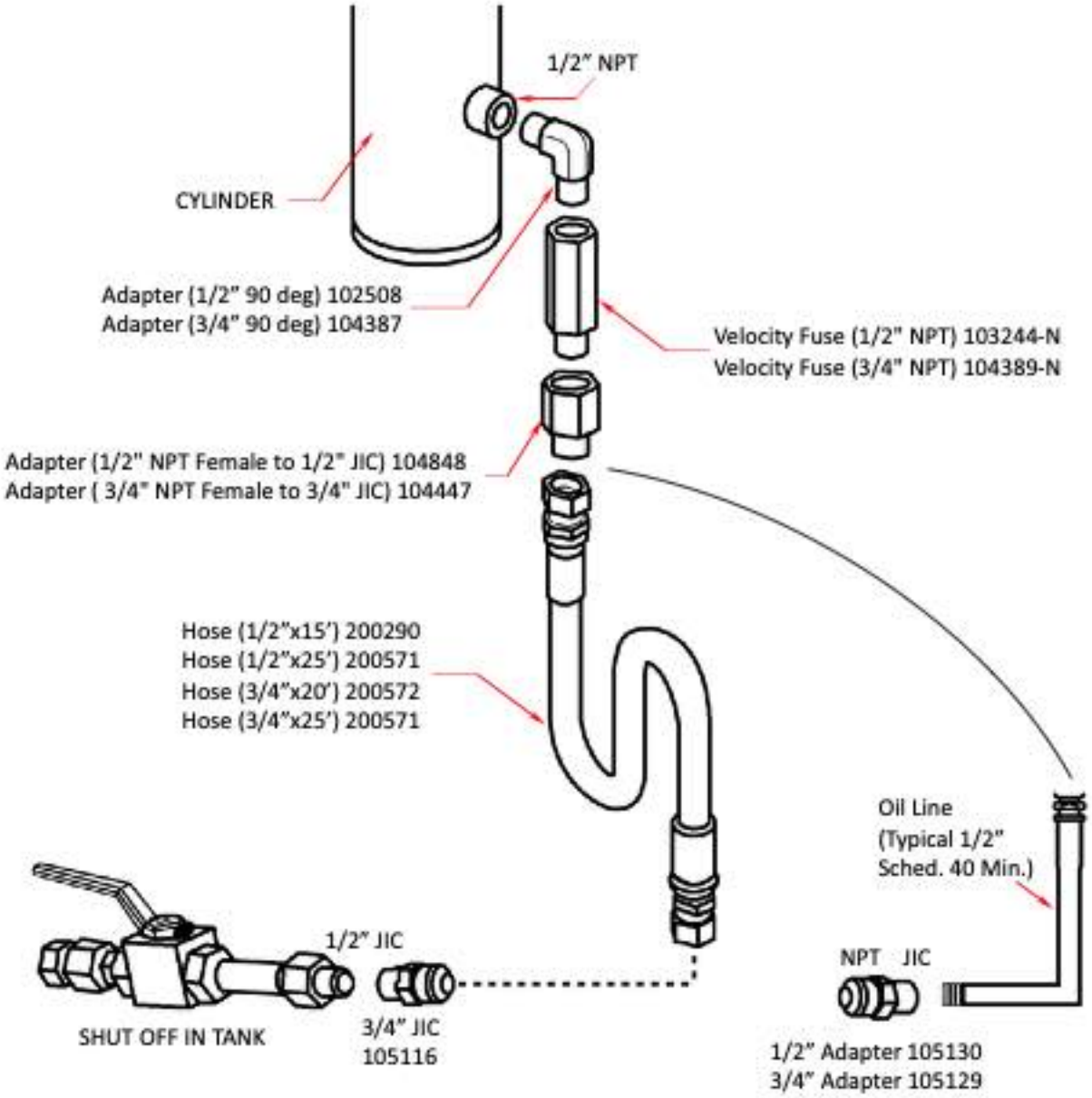

Step 14
Connect temporary run buttons

Connect the temporary run buttons.

Procedure

The temporary run buttons (PN 200438) consist of an UP button (FAST and SLOW speed), a DOWN button (FAST and SLOW speed), and a red safety button.

Figure 61
Temporary run buttons



While pressing the red button, press the UP FAST or SLOW speed button to travel in the up direction or the DOWN FAST or SLOW speed button to travel in the down direction. Release the red button to stop the elevator.

Using the temporary run buttons

1 In order to use the temporary run buttons, you must the place the elevator in Temporary Run Mode as follows:
   a. Connect the P-Tool (P/N 326049) to J1 on the main controller board
   b. Refer to the instructions in Appendix C and use the P-Tool to place the elevator in Temporary Run Mode.
2 Ensure that the auxiliary disconnect switch (fourth pole of disconnect) is connected to screw terminals SW-1 and SW-2. If this isn't done, you should place a jumper across SW-1 and SW-2. **Don't forget to remove the jumper when you're done.**
3 Plug the temporary run buttons into to J12 (TEMP RUN) on the main controller board.

NOTE

Use of the temporary run buttons MUST be restricted to trained personnel since the lift will operate regardless of the status of all safety circuits and door locks.

⚠ CAUTION

Be sure to **remove all temporary jumpers** prior to placing the lift into normal operation.

NOTE

If the temporary run buttons are used after the controller is fully wired, they will trip the redundancy circuit. To reset, turn off power, disconnect the battery, and then reconnect OR trip the final or slack cable switches.

Step 15
Bleed air from cylinder

Bleed the air from the cylinder.

Procedure

1 Open the air bleeder screw (shown below) a half turn. Using the temporary run buttons, press the UP button momentarily and release. The motor will start and then stop. Start and stop the motor quickly. Oil should start to flow through the main valve to the jack cylinder.
2 As the oil flows into the cylinder, air will be heard to hiss out of the air bleeder valve. Have your co-worker near the air bleeder to verify this.
3 **DO NOT** run the motor continuously to try and speed up the bleeding process or the jack may jump up unexpectedly. This is due to the oil entering faster than the air can escape.
4 When the air is exhausted from the cylinder, oil will begin to flow out of the bleeder valve. At this point, close the air bleeder valve. Check for oil leaks at all fittings.

Figure 62
Air bleeder screw



Step 16
Install aircraft cables

Install the aircraft cables.

Procedure

Adjust the roping position

To adjust the roping position, proceed as follows:

1 Refer to the **Installation Drawings** for **"Roping Position"** and run the cylinder to the height specified. See Figure 63 below.

2 The roping position will ensure 2" (51 mm) of run-by at the top floor and the buffers will ensure a maximum of 2" (51 mm) of run-by at the bottom floor. This may vary by jurisdiction.

3 Install the cables with the piston extended to the roping position and the sling sitting on the buffers.

NOTE

The elevator will not reach the top and bottom landings correctly unless the roping position is set correctly. Shallow pits (less than 8") will require 2" of slack rope when the cab is at the bottom landing.

Figure 63
Roping position

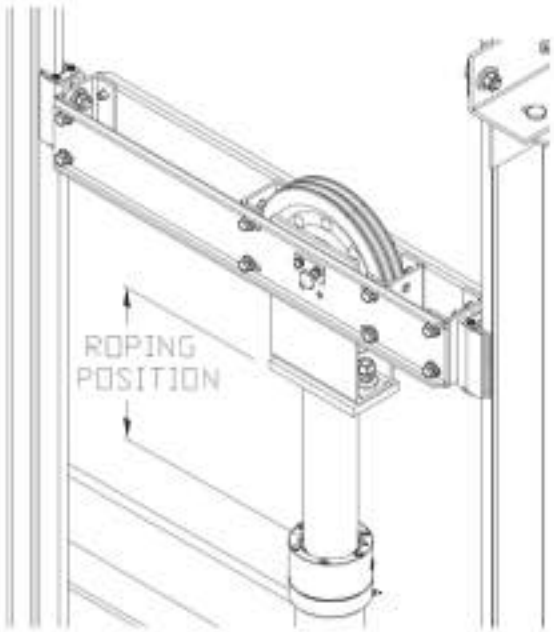

Cable installation

⚠ WARNING

Ensure there is good communication between you and your co-worker. Do not place yourself in an unsafe position during this procedure. Attach the rail safety stops.

NOTE

Before putting any weight on the cables, make sure that the nuts on the wedge clamp threaded rods are backed off to the end of the threads on the rod. To ensure plenty of adjustment to equalize the cable tension when weight is applied, leave two full nuts at the end on the thread. When adjusted, there must be two nuts locked together on the underside of each rod. There must be one nut on top that is used to prevent the wedge clamp from rotating.

⚠ WARNING

If cable adjustment within the wedge assembly is required, be sure the platform is bottomed out or on the safeties before releasing the cable wedge and clamps.

1 Attach the threaded rod of the wedge clamp to the rope tie-down bracket located in the pit channel (Figures 64 and 65).

Figure 64
Wedge clamp

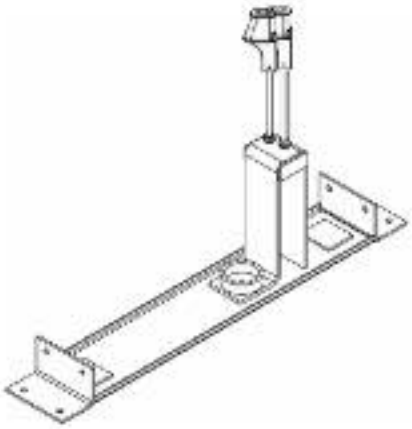

Figure 65
Position of wedge clamps



2 Identify the cables as they descend the other side of the sheave and attach them to the wedge clamps.
NOTE: Ensure that the cables do not cross over.

3 Manually thread the cables into the wedge in a loop (see below), and then place the loose wedge piece in the loop. Pull on the loose end to take up the slack in the cable. Confirm that each loaded cable is directly over the threaded rod. **DO NOT REVERSE.**

Figure 66
Cable installation

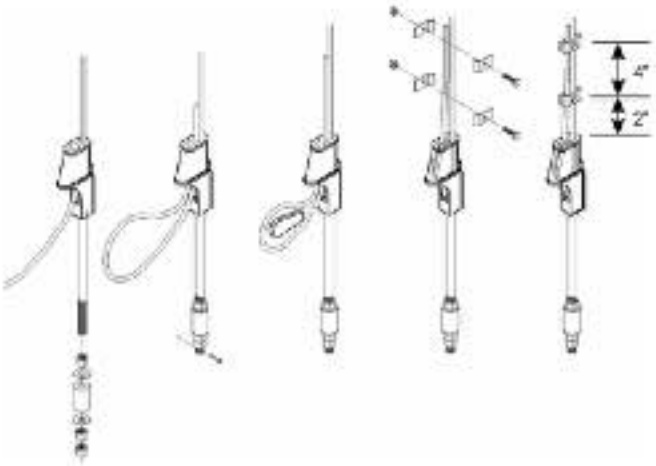

4 Pull up on both cables until they are equal in tension. The wedge piece will hold the cables in place. Tape the loose ends of each cable temporarily to prevent them from becoming wedged in the sling. They will be cut later.

5 Perform a final inspection to ensure that all cables are in correct alignment and that all hardware such as bolts, clamps, wedges and pins are in place.

There may be instances where the platform will not be able to reach the top landing, but the jack can still handle the travel. When this happens, it usually means that the rope wedge terminations have not been correctly adjusted. If the rope wedge terminations are not properly adjusted and if the pit is deep enough, the elevator may descend 6" (152 mm) below the bottom floor level but not be able to reach the top landing.

To correct this problem, shorten the cables by tightening the nuts on the 1/2" (13 mm) threaded rods. Each cable should be shortened evenly to ensure that the elevator will reach the top landing and the terminal run-bys with equal tension. After ensuring adequate travel, cut off this excess. Attach the ends with electrical tape to the lifting cable.

Step 17
Attach cab floor (platform)

Attach the cab floor (platform) to the sling.

Procedure

Secure the cab floor to the sling (see below) with #10 x 3/4" wood screws that will not pierce the floor. During cab wall assembly, you will attach longer screws (#8 x 1-1/2") through the floor and into the cab walls to add cab wall support.

1 Use the temporary run buttons to raise the sling so you can work underneath.
2 Level the sling, ensuring it is level side to side.
3 Place the cab floor on the sling arms.
4 Measure the clear opening based on the following guidelines (Figure 68):
   a. The clearance between the hoistway side of the landing door and the edge of the landing sill shall not exceed 0.75" (swing doors) and 2.25" (sliding doors).
   b. The distance between the hoistway face of the landing door or gate and the car door or gate shall not exceed 4".
   c. The elevator design is with a maximum 1.25" running clearance.
5 Ensure the cab floor is level side to side.
6 Secure the cab floor to the sling from underneath using 30 x #10 x 3/4" wood screws from pre-pack 105286. The screws are installed from underneath on all four sides of the floor (see below).

Figure 67
Cab floor assembly

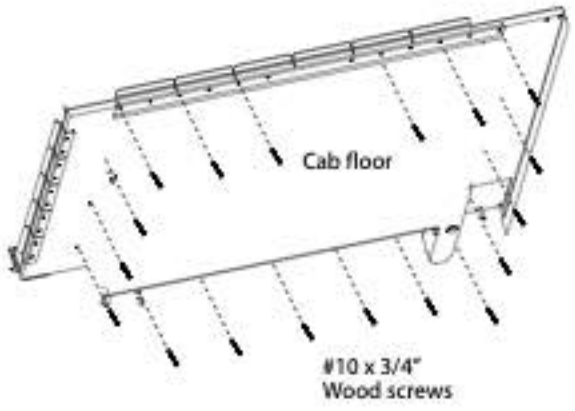

Attach with pre-pack 105286 containing:
30 x #10 x 3/4" wood screws

Figure 68
Floor running clearances

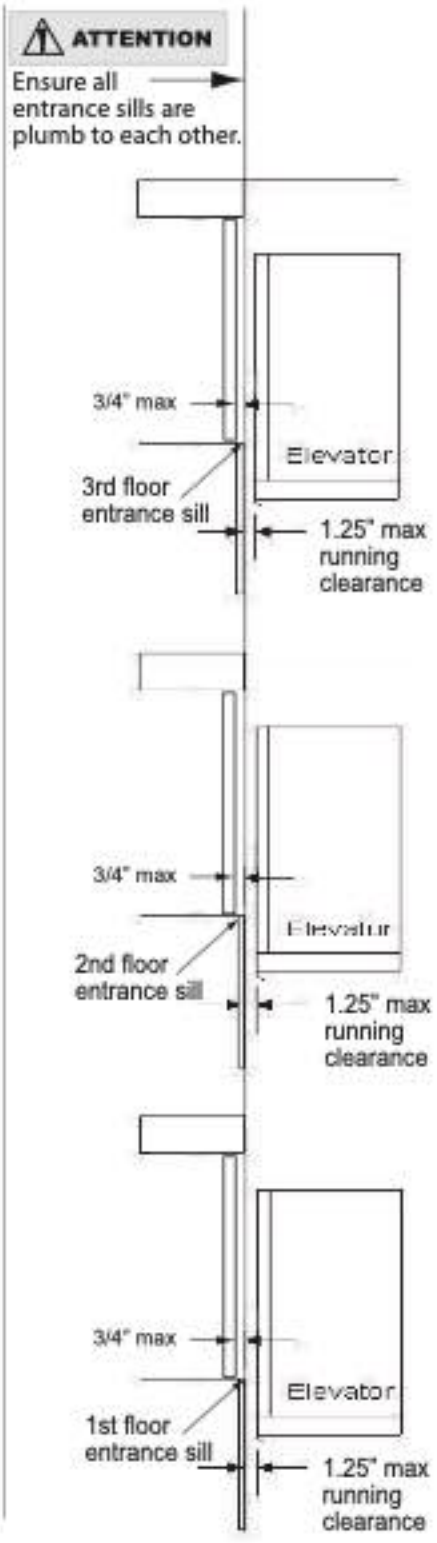

Step 18
Set safeties

Set the safeties.

Procedure

1 Position yourself on the platform and make sure the two lower guide shoes are loose on the bolts. It should be possible to manually push the platform toward the shaft wall and sufficiently open the gap at the back of the safety block to place a 1/16" (2 mm) shim on each safety block. The shims should remain in position when the pressure is released from the platform (stop pushing). See Figure 69.

2 Use the temporary run buttons to the run the lift down while you press down on the tripping pan.

3 While pressing on it, the tripping pan will move down once the platform starts to descend; the safety block's knurled wheels will be forced into position. This will wedge the safeties securely against the rails and prevent any further descent of the platform.

4 This also sets the distance of clearance at the back of the safety blocks, as the 1/16" (2 mm) shims are still in place. Once the safeties have been set (supported the load), instruct your co-worker to release the manual lowering valve.

5 With the safeties set and the shims in place, tighten the bolts on the two lower guide shoes. This will set the clearance.

6 Check that the slack cable (plank) safety switch has tripped; adjust as required. Figure 69 (top right) shows the location of the old safety switch. The new trip pan safety switch bracket assembly (323878) is shown in Figure 69b at the bottom right.

7 Start the pump and move the elevator in the UP direction a few inches. This will apply tension to the cables and the mechanical safety device will automatically reset itself to its proper running position. The switch must be pushed manually to reset it.

8 Remember to check the slack cable (plank) safety switch. This switch must be manually reset every time the safeties trip or the elevator will not operate.

9 Remove the two shims behind the safety blocks before attempting to run the platform. This may be difficult, as they may be tight in places and some loosening may be necessary to remove them. Usually, the shims will come out when the elevator is moved in the UP direction and is then lowered.

10 Ensure proper tensioning of the cables on re-application of weight.

11 File the knurled wheel imprints on the guide rail if necessary.

Figure 69
Safety block and shim

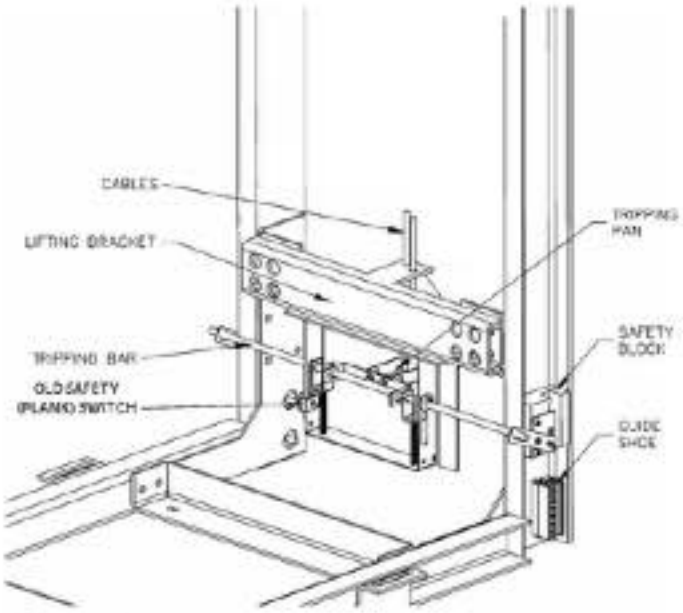

Figure 69b
New safety switch bracket assembly (p/n 323878)

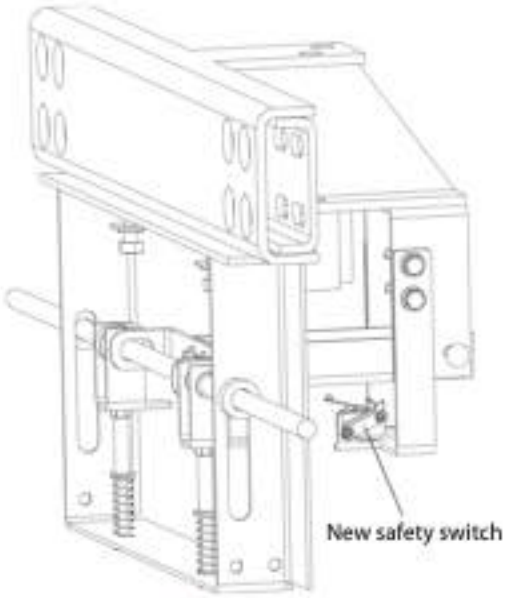



Step 19
Install tape and tape reader (selector)

Install the tape and tape reader (selector).

Procedure

NOTE

The tape and tape reader must always be installed on the left-hand side.

1 Refer to the illustrations on the next five pages for detailed instructions on how to install the tape and tape reader assembly.

2 Once the car top box has been installed (see STEP 26), you can connect the cable from J6A on the tape reader selector PCB to J6 on the car top board.

Figure 70
Infinity tower tape reader installation

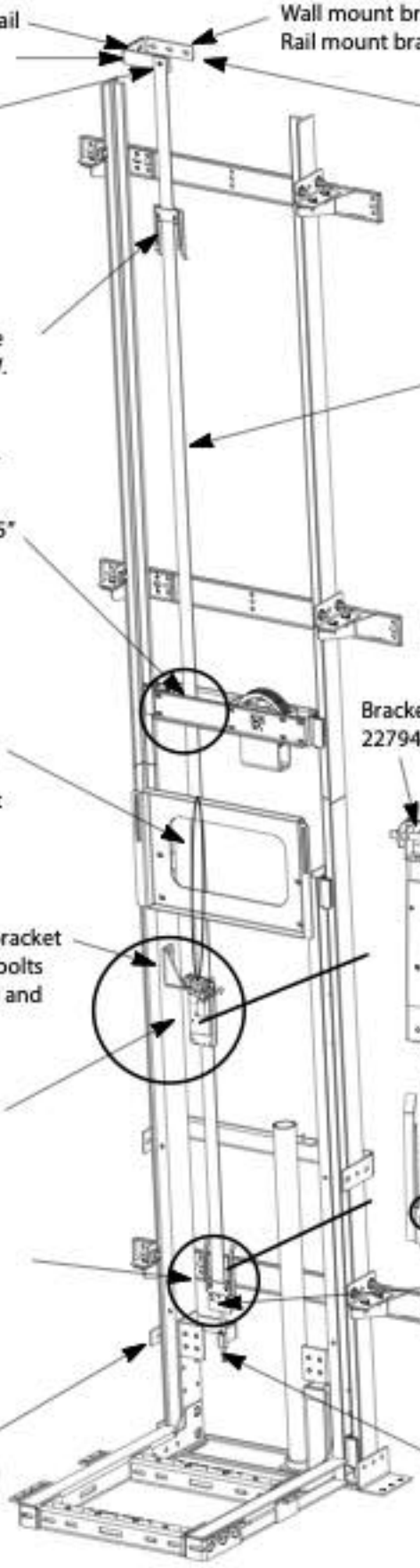

Align this face with rail

Tape mounting bracket 227831

Wall mount bracket 227832 - anchor to wall, OR
Rail mount bracket 326534 - attach to rail

Assemble top mounting brackets together (227831 and 227832 or 326534) - outside face in line with rail - using two 1/2" bolts (101052), flat washers (102189), lock washers (102193) and hex nuts (101106) from H/W KIT 227924. Adjust brackets as per *** NOTE** at left.

Attach top of tape to tape mounting bracket (227831) using one 1/4" bolt (103398), flat washer (101196) and hex nut (101930) from H/W KIT 227924.

Clamp cam (227960) onto tape using clamp (227961) and H/W. in cam box. Face of cam (see exploded view at right below) must be 3" ABOVE tape reader.

Magnetic tape:
20 ft tape (777132)
30 ft tape (777133)
40 ft tape (777134)
50 ft tape (777135)
60 ft tape (777163)
70 ft tape (777167)

*** NOTE** that tape must be 1.25" from back and 1" from front of yoke assembly brackets. Use top mounting brackets (227831 and 227832 above) to adjust distances.

Bracket 227836

Bracket 227943

Pin 106636

Attach tape reader assembly to tape reader mounting bracket using H/W from KIT 227924.

1. Attach bracket (227943) to tape reader using two #10 bolts (104523) and hex nuts (104400).
2. Attach bracket (227836) to tape reader mounting bracket (227835) using two 1/4" bolts (103398), flat washers (101196), lock washers (101213) and hex nuts (102205).
3. Position tape reader and secure to tape reader mounting bracket (227835) using 1/4" pin (106636).

Fasten a wire from tape reader to sling spreader channel. This will ensure tape reader doesn't fall off when you slide it up for maintenance after removing 1/4" pin.

Attach tape reader mounting bracket (227835) to rail using two 3/8" bolts (102197), flat washers (102188) and lock washers (102191) from H/W KIT 227924.

3"

Tape reader 227955 (selector assembly)

For cam placement, refer to page 39

Clamp cam (227960) onto tape using clamp (227961) and H/W in cam box.

Attach bottom of tape to tape tensionser (227956 and 227957) using two 3/8" bolts (102197), flat washers (102188), lock washers (102191) and hex nuts (102186) from H/W KIT 227977.

Attach bottom mounting bracket (227834) to rail using RAIL CLIP KIT 201350.

Attach tape rod (227956) to bottom mounting bracket (227834) using spring (227959), 1/2" washer (102189), hex nut (101106), and cotter pin (101832).

Figure 71
Standard tape reader (40 ft/min) assembly and cams

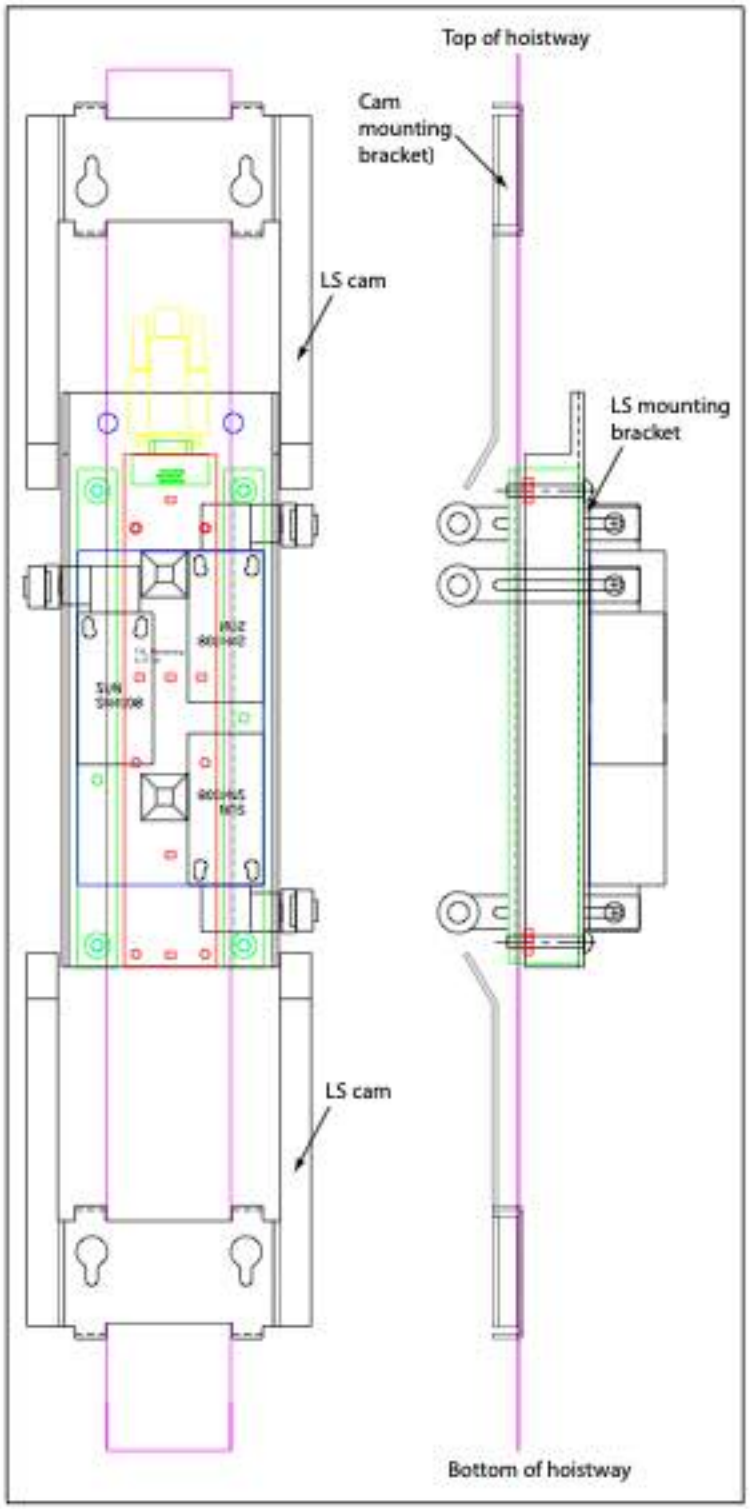

Figure 71a
Long tape reader (60 ft/min) assembly and cams

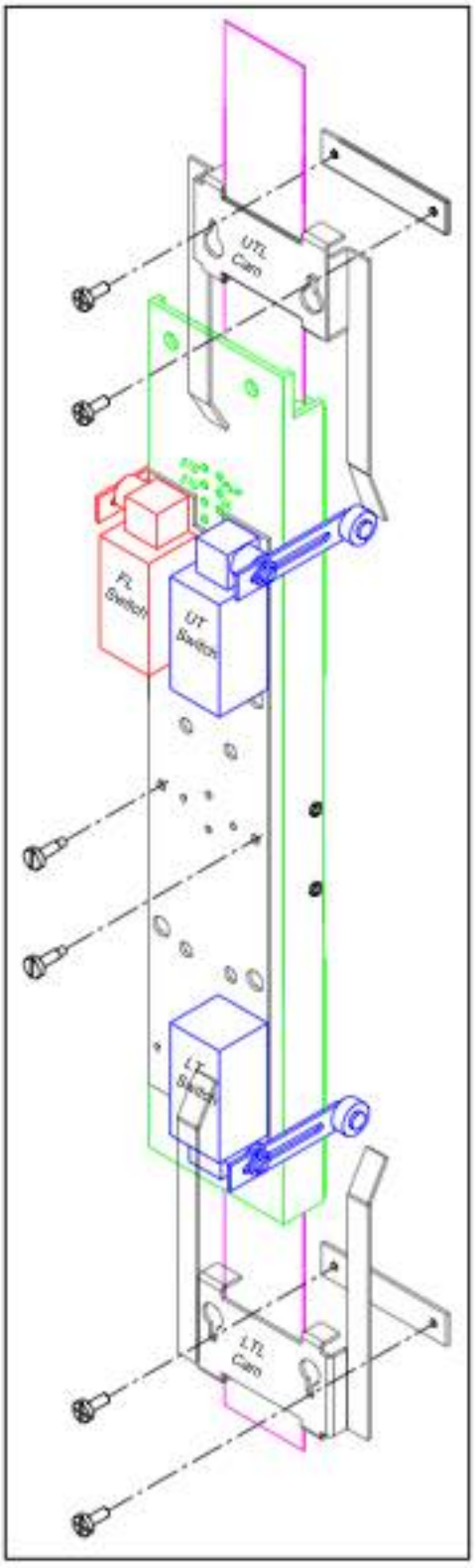

3 Figure 71a from the previous page is repeated on the right to help illustrate proper placement of the cams (steps 7 through 15 below).

4 Be careful with the lower terminal limit (LTL) cam placement.



5 You must locate the lower terminal (LTL) U-shaped cam so that it pushes the lower terminal limit (LTL) switch as the lift travels below the lower landing.

6 The LTL switch is on the lower right side of selector.

7 The selector lights are on the car top junction board and duplicates are on the upper left side of the main controller board.

8 The ideal sequence is that as the lift approaches the lower landing the DL (down level) light comes on first.

9 Then the DZ (door zone) and P1 (position 1) lights come on as the DL light goes off. Floor level is when DZ and P1 lights only are on.

10 As the lift continues down, the UL (up level) light comes on the main controller board to indicate the lift is below the floor. This is the point of travel (approximately 1 inch below the bottom floor) that the LTL switch should be depressed.

11 As the LTL switch is pressed, the LT light next to TC5 on the main controller board should go OFF and the TC27 light on the upper right of the board should come on. This LT off and TC27 on is the reset signal to the controller and it should run in slow speed back up to floor level once reset.

12 The upper terminal limit (UTL) cam should push the upper terminal limit (UTL) switch as the lift runs past the top floor.

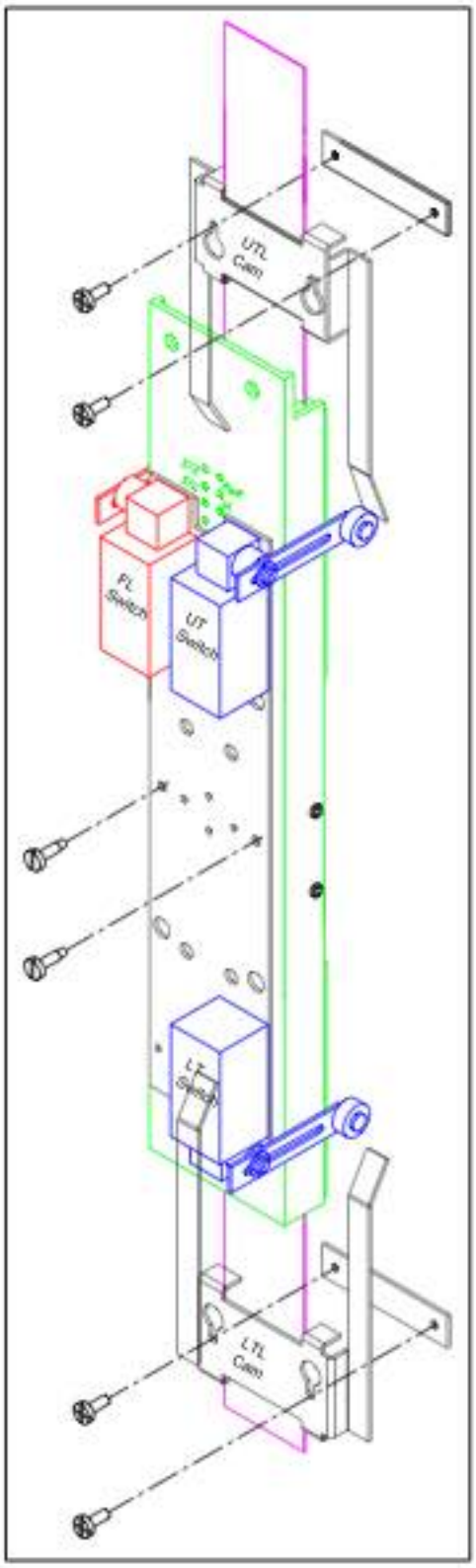

13 For the standard tape reader, use the Micro-6 magnet template part no. 227923 (shown at the right) to assist in placing the magnets on the tape. See the magnet configurations below.

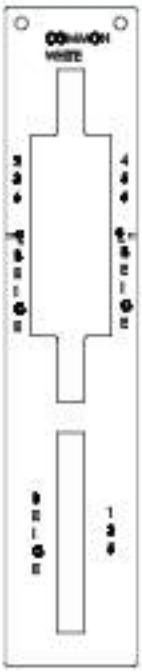

NOTE

If you are placing the magnets while using either the P-Tool or the temporary run buttons, you must unplug the cable from J10 on the controller board. Don't forget to plug it back in before running the lift in normal mode.

Figure 72
Selector magnet configuration

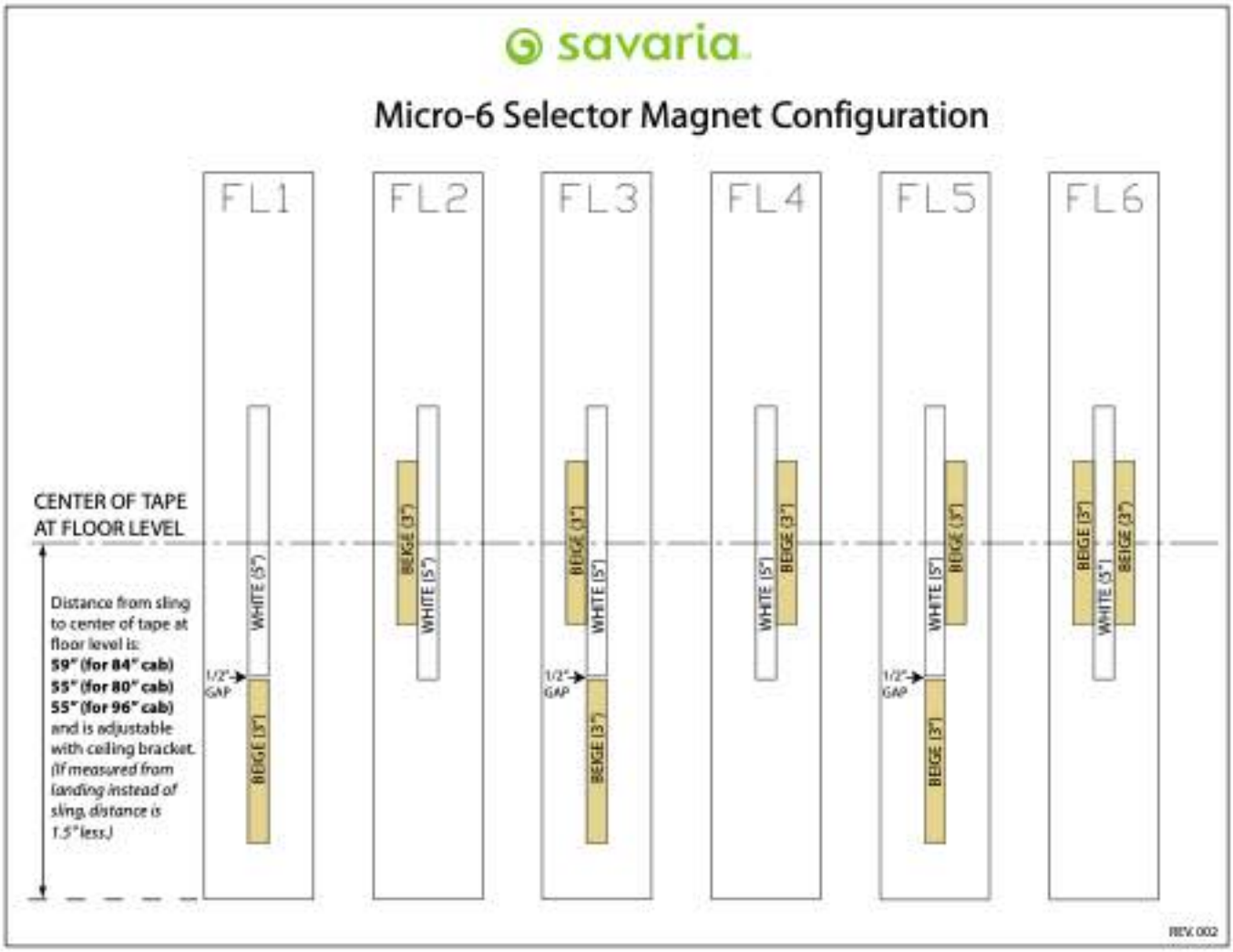

For the longer tape reader, use the Micro-6 Selector 2 magnet template (part no. 227923-HS) to assist in placing the magnets on the tape. See the magnet configuration below.

Figure 71a
Micro-6 Selector 2 magnet configuration

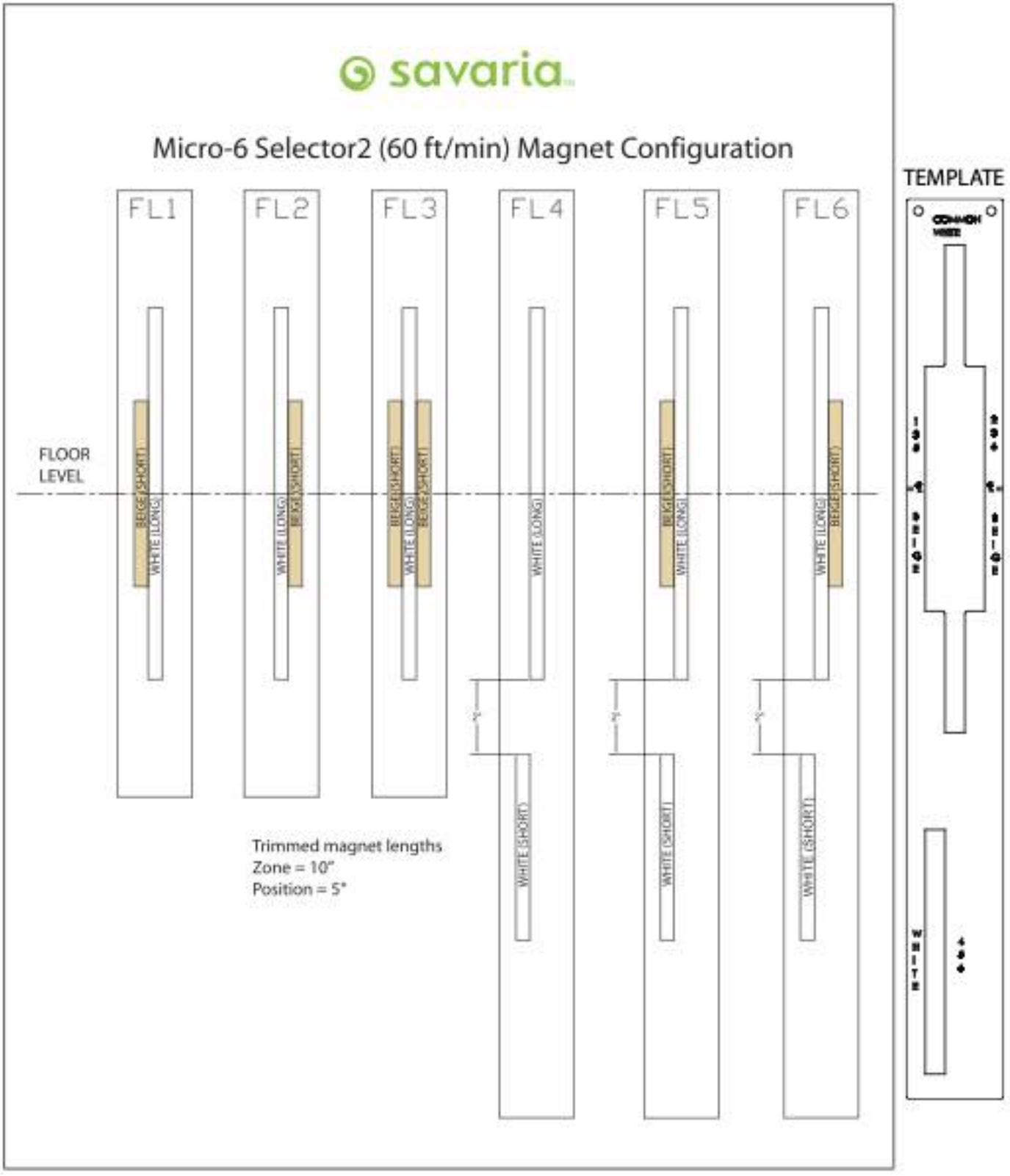

Figure 73
Selector PCB layout



Figure 74
Sensor spacing (40 ft/min and 60 ft/min)

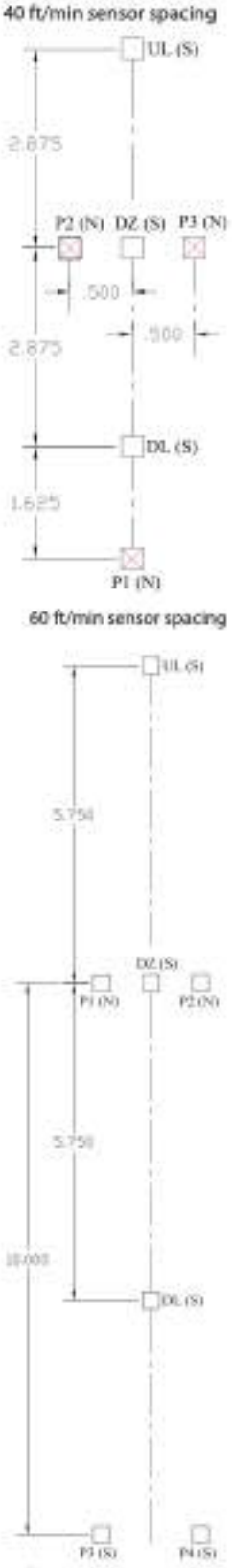

In the illustration above:

- P1 = Positioning binary 1's lane
- P2 = Positioning binary 2's lane
- P3 = Positioning binary 4's lane

Step 20
Install floor zone switches and cam

Install the floor zone switches at the landings and the cam on the sling.

Procedure

1 Turn off power to the elevator.

2 The floor zone switch is only supplied on elevators with electric solenoid door locks and swing doors. It clips onto the rail (see Figures below).

Figure 75



3 This switch is activated by the floor zone cam which is mounted on the sling (see Figure below). The switch should make contact 2" (51 mm) above or below the floor by centering the switch on the cam with the platform. The switch position is critical and must be positioned in the center of the cam.

Figure 76

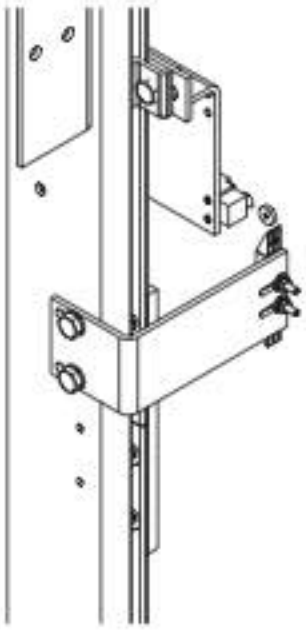

4 Connect the floor zone switch harness to the lock harness.

5 Connect the lock harness to the landing door lock.

Figure 77



Step 21
Install hall calls (landing stations)

Install the hall calls at the landings.

Procedure

If the doors and walls are under construction, temporarily attach the hall calls to the hoistway to ensure that you can test Eclipse operation; otherwise, jump the hall calls on the main controller board to ensure that you can test the operation.

Be sure to secure all wiring on the sling. Attempt to secure the wires in such a way that you can remove individual wire connections if required —this method can save maintenance time at a later date.

1 Attach the hall calls temporarily to the hoistway wall if door walls are not yet suitably built out.

Figure 78
Hall call

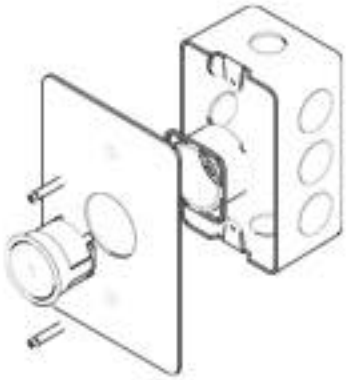

2 Connect each hall landing station harness part no. 326009-XX to the appropriate connector on the main controller board J23 (FL1) to J28 (FL6) – hall calls connect to pins 7, 8, 9, and 10 on these connectors. See the diagram on the right.

This harness carries the signals for the lock and hall call, and door operator (if equipped) to the main controller.

3 IMPORTANT: Be sure to connect a 14 AWG green ground wire (not provided) from the screw on the back of the hall call metal box to the ground bar in the controller.

4 Jump any floor on the main controller board that does not require a hall call.

5 Connect the hall station position indicator (PI) harness part no. 326053-1F from J11 on the controller board to the 1st floor PI board. Then wire from the 1st floor PI board to the 2nd floor PI board, from the 2nd floor PI board to the 3rd floor PI board, and so on up to the 6th floor.

Figure 79
Landing connection diagram

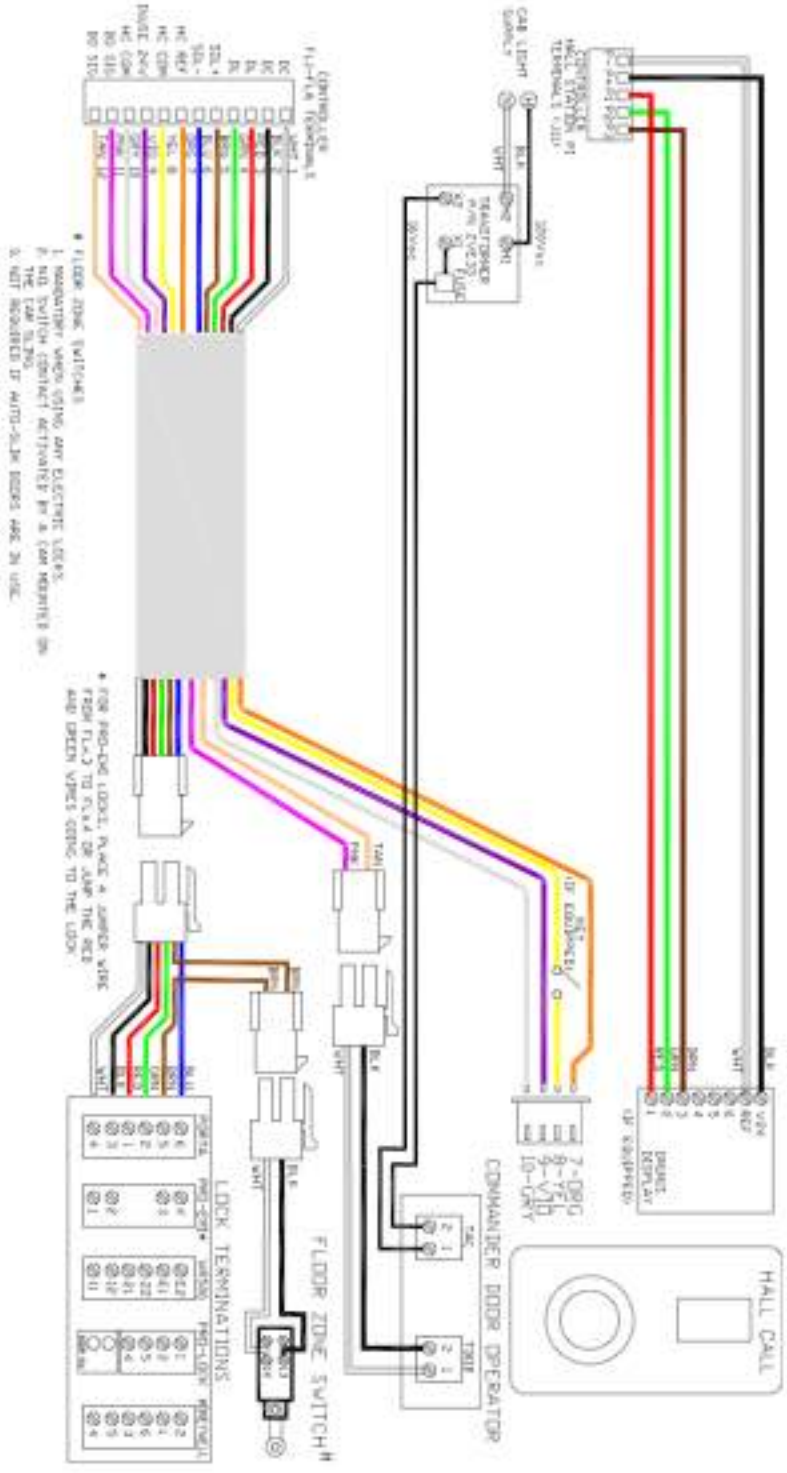

Step 22
Install pit switch

Install the pit switch in the pit area.

Procedure

⚠ WARNING

Shaft wiring must be done in accordance with local codes and regulations. Check with your local enforcing authority.

⚠ WARNING

Never use solid wire such as thermostat wire to wire the lift. Use only the stranded multi-wire provided.

1 Install the switch-box portion of the pit stop switch assembly (see below) in the pit area close to the slam side of the door frame. The switch box portion should be installed about 4 feet (1219 mm) above the lower landing level where it can be reached easily while standing in the door opening.

2 Run wiring or conduit from the pit switch to the machine room controller. Connect the pit switch to terminal J17, PS1 and PS2 on the machine room controller board. Refer to the Electrical Schematics.

Figure 80
Pit stop switch box



Step 23
Install light screens

Install the light screens.

Procedure

NOTE

You MUST install the light screens on the cab walls BEFORE building the cab.
The power supply for the light screens is shipped inside the end cap of the light screen shipping tube; be sure to check both ends of the tube before discarding it.

IMPORTANT: Before attaching the light screens, you must determine which is the ACTIVE side and which is the DEAD side. If you slide your hand along the edge of the active side, you can feel the transmitter/receiver in the groove of the light screen. The groove on the other side is empty.

It is critical that the light screen transmitter and receiver are pointed directly at one another, facing one another so the light screen will activate properly.

Note that the light screen receiver for each door opening is mounted on the extrusion closest to the control wall and the light screen transmitter is mounted on the opposite wall (as shown at the right).

A **Type 3 cab** is shown here as an example. The procedure will vary slightly depending on your cab type. (See the next page for a Type 1L cab with scissor gate).

1 For the first light screen:
   a. Place one light screen against the corresponding wall mounting extrusion making sure that you line up the bottom of the light screen with the top of the platform.
   b. Secure the light screen to the wall mounting extrusion using five #6-3/4 screws per light screen (p/n 105792).

2 For the second light screen:
   a. Place the second light screen against the corresponding wall mounting extrusion, making sure that you line up the bottom of the light screen with the top of the platform.
   b. Secure the light screen to the wall mounting extrusion using five #6-3/4 screws per light screen (p/n 105792).

3 Feed the light screen cables through the ceiling extrusion plates and connect per the Electrical Schematics.

A **Type 1R cab with scissor gate** is shown on the next page.

1 Attach the light screens to the slam post and pocket as shown, using five #6-3/4 screws per light screen (p/n 105792).

2 Feed the light screen cables through the ceiling extrusion plates and connect per the Electrical Schematics.

Figure 81
Light screen installation

Type 3 Cab

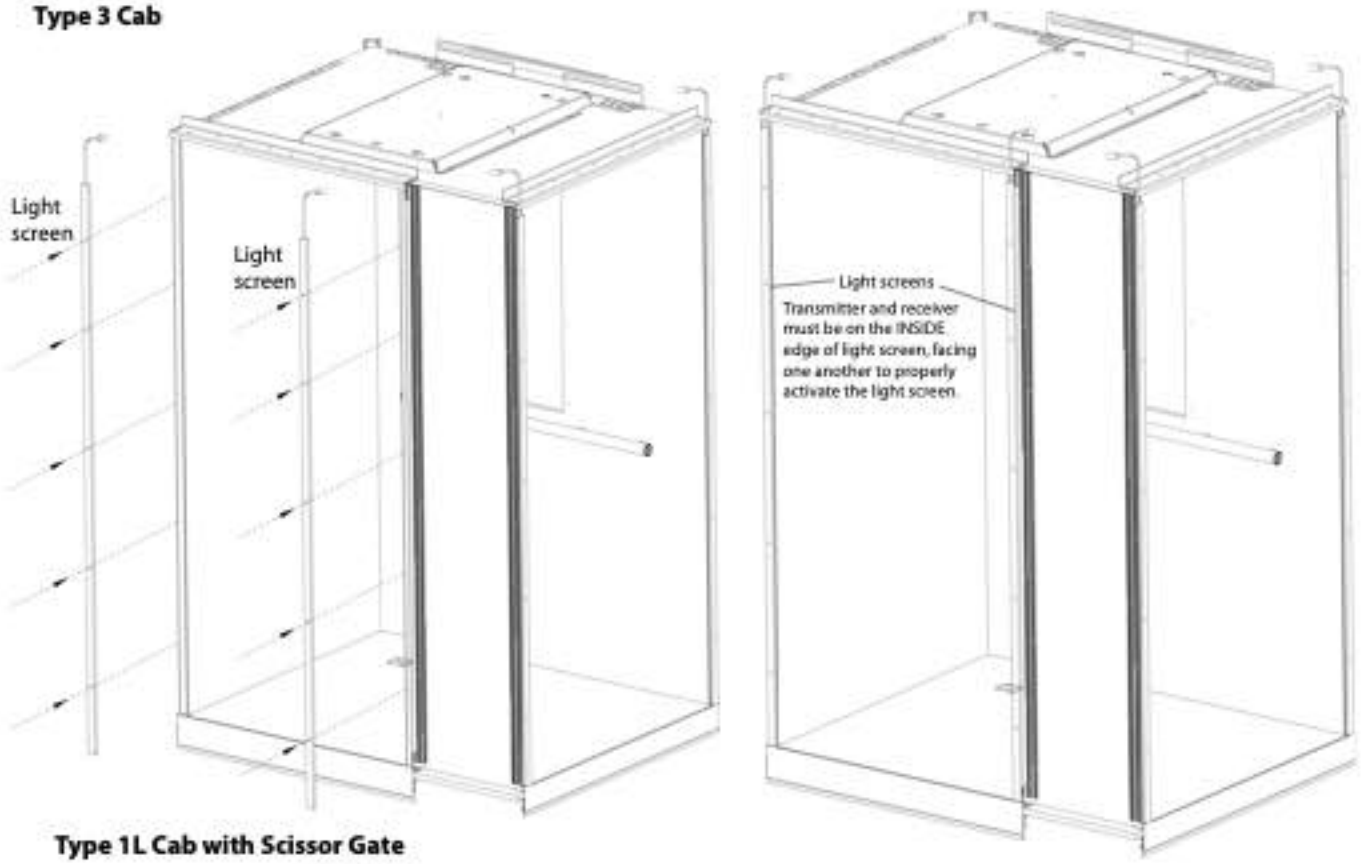

Type 1L Cab with Scissor Gate

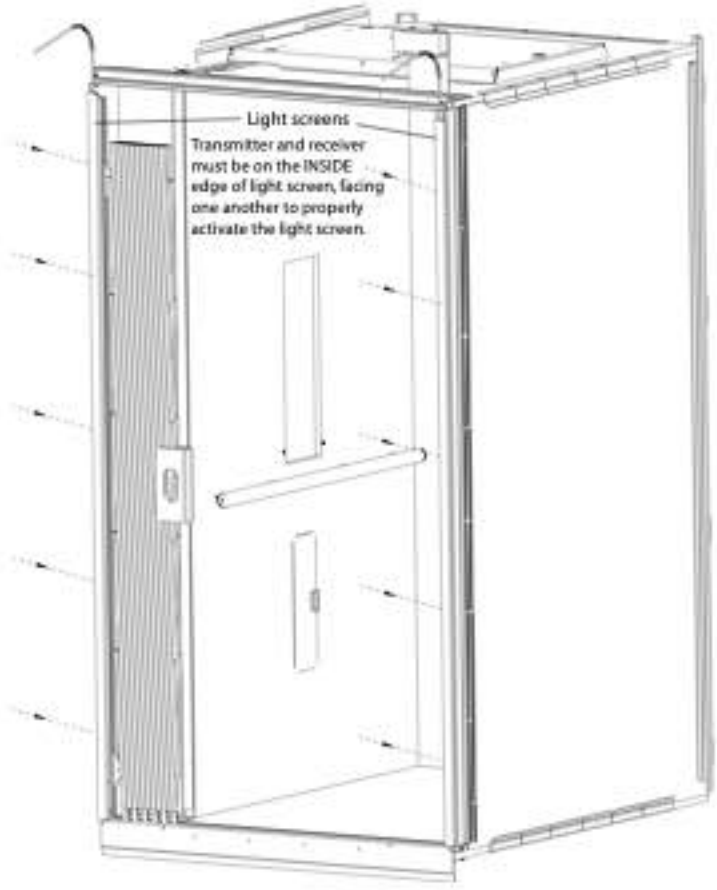

Step 24
Assemble cab

Assemble the cab.

NOTE

The following cab assembly procedure is for standard cabs. For any cab other than standard, our Engineering department fits all parts together using the full version of SOLIDWORKS. We call this 3D drawing our "model".

To get a copy of the 3D model for your job, email our Tech Support administrator at CFujs@savaria.com requesting a copy of the 3D model. This 3D model is job specific, showing all cab parts and how they fit together.

To view the 3D model, download a free read-only version of SOLIDWORKS from www.solidworks.com. In SOLIDWORKS, you can rotate, zoom in, and hide outer parts to see what is underneath

NOTE

The following cab assembly procedure is for a standard cab. For a **steel cab**, refer to Tech Bulletin, P/N 001155 for cab assembly instructions. For a **glass cab**, refer to Tech Bulletin, P/N 001024 for cab assembly instructions.

Procedure

NOTE

Be sure you have installed the light screens as described in the previous procedure; they MUST be installed on the cab walls before building the cab. Refer to Appendix B for illustrations of the various cab types and the order of installation for the cab components.

To assemble the cab, follow the steps below. This procedure is based on a Type 1R cab.

1 Ensure the cab floor is level side to side.
2 Attach the handrail to the COP wall using the screws in the bag taped to the handrail.
3 Lift the back of the cab COP wall onto the cab floor.
4 Place the next cab wall onto the cab floor.
5 To secure the walls together at the corners (see below) use a channel joiner. Tap the joiner into place using a soft mallet.
6 Repeat the preceding step for the third wall if this is a one-door elevator.

Figure 82
Joining cab walls together

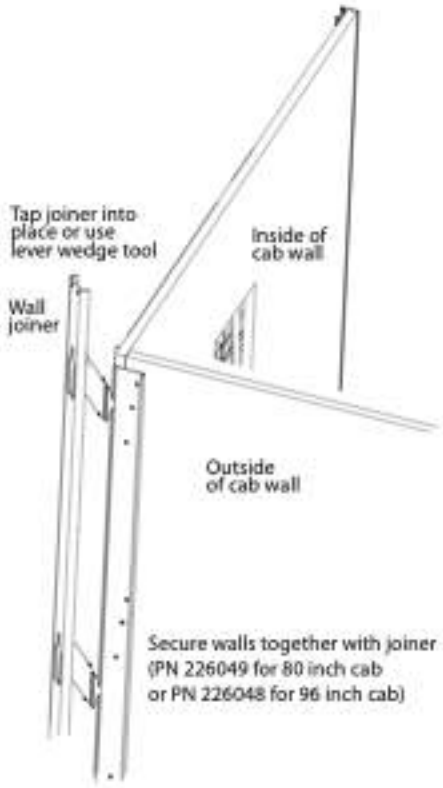

7 Place the ceiling onto the cab walls. The walls should be snug to the guide strips along the ceiling edges.

Figure 83
Ceiling placement

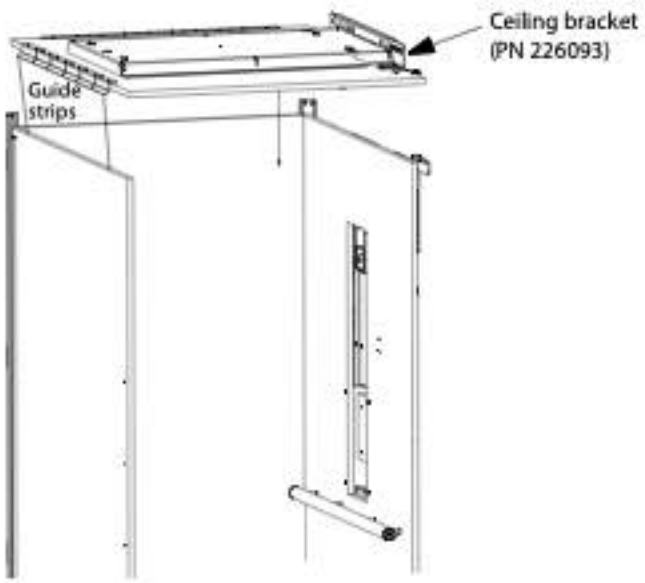

8 Assemble the ceiling bracket (PN 226093) which is already attached to the ceiling, to the 80" cab spreader channel (PN 221598) on the sling.

Figure 84
Ceiling bracket to sling attachment

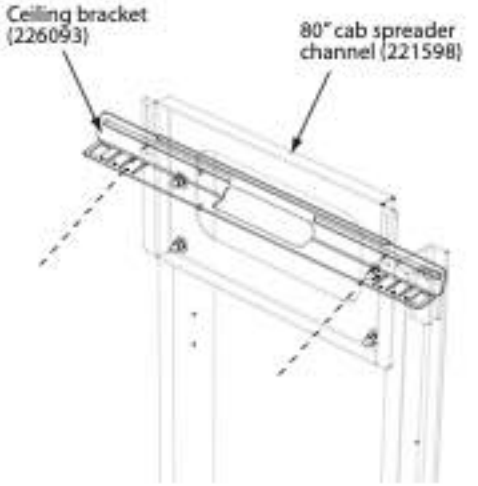

Attach with pre-pack 227029 containing:
2 x 1/2"-13 x 1-1/2" carriage bolts
2 x 1/2" lock washers
2 x 1/2" hex nuts

9 Attach the ceiling to the cab walls using wood screws. Once these screws pierce the cab walls they help support the overall cab structure.

⚠ CAUTION

The wood screws can split the cab walls. Make sure you pre-drill using a 1/8" drill bit to avoid cab wall damage.

Figure 85
Ceiling assembly

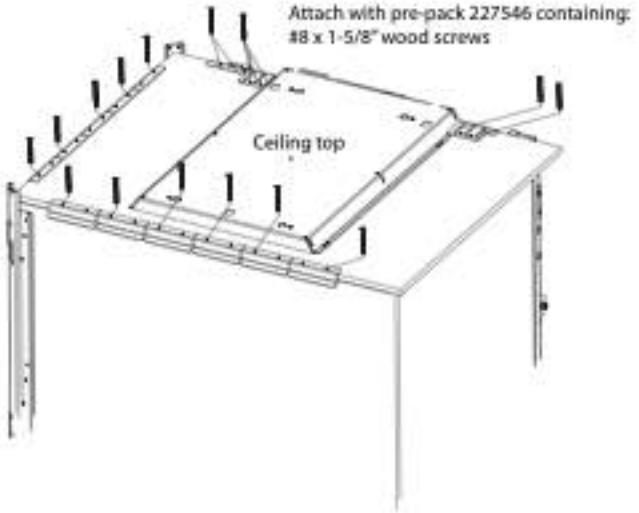

10 Assemble the ceiling to the wall strap at the pocket side.

Figure 86
Ceiling to wall strap at pocket side

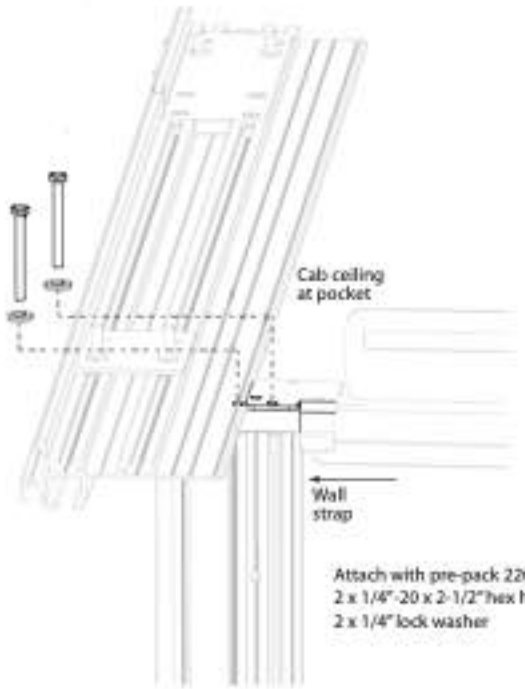

Attach with pre-pack 226660 containing:
2 x 1/4"-20 x 2-1/2" hex head bolts
2 x 1/4" lock washer

11 Assemble the ceiling to the wall strap at the slam side.

Figure 87
Ceiling to wall strap at slam side

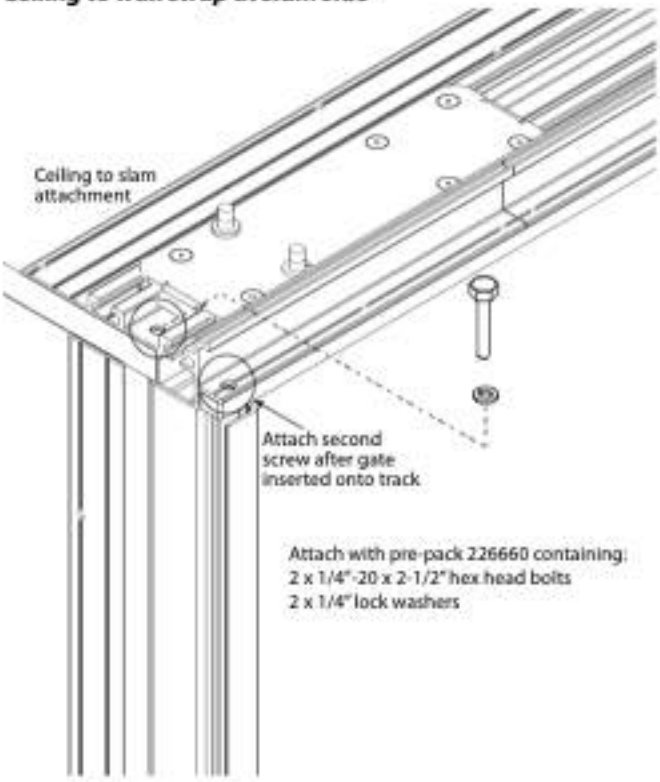

12 Attach the floor to the cab walls around the perimeter of the floor.

Figure 88
Wood screws to help support wall structure

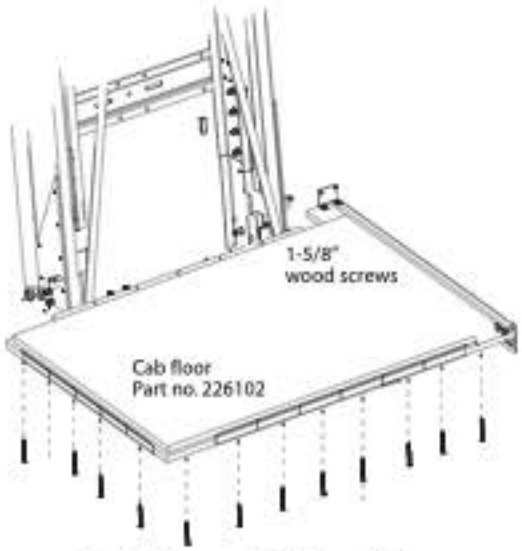

13 Attach the floor to the wall strap at the slam side.

Figure 89
Floor to wall strap at slam side

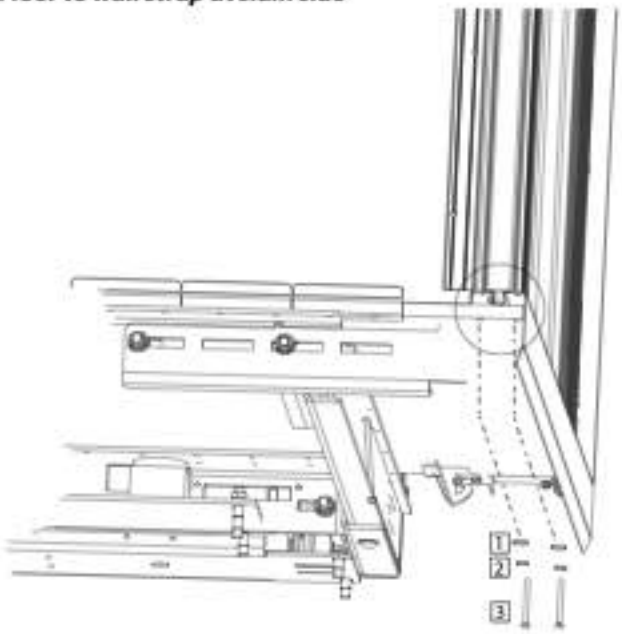

14 Attach the floor to the wall strap at the pocket side.

Figure 90
Floor to wall strap at pocket side

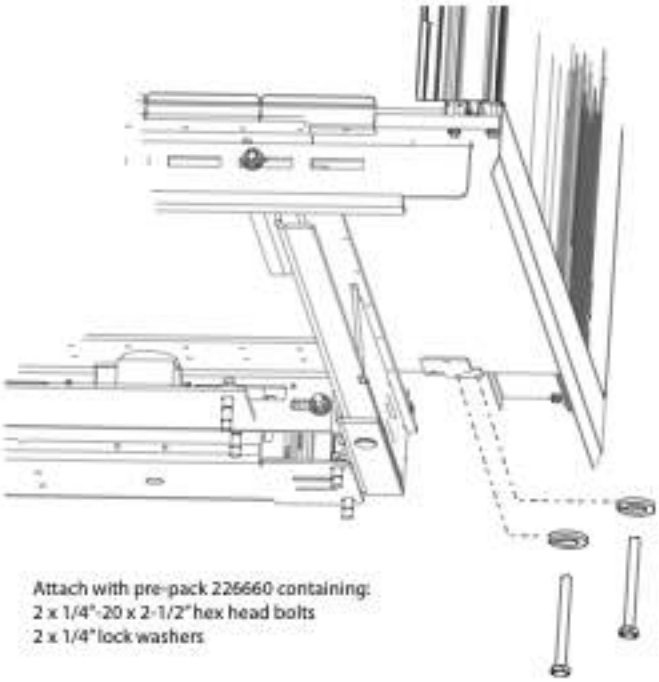

15 Plumb the cab.

16 Once the car top box has been installed (see STEP 26), you can connect the ceiling pot lights to T10 on the car top board.

The ceiling pot lights connector and car top stop switch connector are housed in flexible conduit on the cab ceiling top.

17 Once the car top box has been installed (see STEP 26), you can connect the car top stop switch between SR2 and LS1 on the car top board. The car top stop switch location is always on the sill side.

NOTE

When the car top switch is activated, you will need to reset the controller.

Figure 91
Car top stop switch

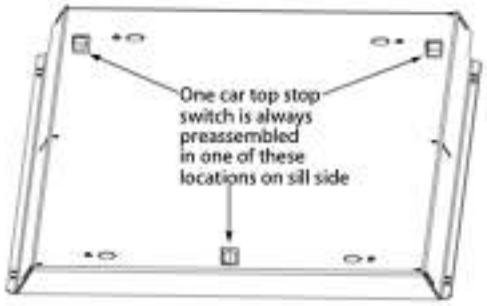

Step 25
Install car operating panel (COP)

Install the car operating panel.

Procedure

NOTE

Refer to Appendix H for Set up, programming (including how to turn off auto-answer) and troubleshooting of the Rath 2400.

1 Attach the COP support bracket to the back side of the COP wall at the bottom of the cutout (two screws).

Figure 92
COP support bracket



COP attaches to bracket at these two points (from front of COP wall)

2 Insert the car operating panel (COP) into the COP wall cutout from inside the cab. Note that the clips at the top of the COP MUST slide in behind the cab wall to hold the COP in place. Bend the clips slightly to accommodate 3/4" walls as necessary.

3 Secure the COP to the COP support bracket with the two screws provided.

4 Once the car top box has been installed (see STEP 26), you can connect the red, blue and yellow CAT-5 cables from the COP board to connectors T11, T12 and T13 on the car top board

Figure 93
COP installation





Step 26
Install phone

Mount the phone box (if equipped) and install the slim corded phone in the cab.

Step

1 If the cab has a cutout for a phone box located below the handrail on the COP wall, install the phone box as described.
   a. Insert the phone box into the COP wall cutout. Use 8 screws to fasten the box to the 3/4" COP wood through the pre-drilled holes in the box (2 at the top, 2 at the bottom and 2 on each side).
   b. Ensure the box is installed far enough in the wall so the door plate is flush against the cab wall.

Figure 94
Phone box



   c. Place the phone in the phone box.
   d. Feed the phone cord out through the top hole in the phone box, route it to the car top box and plug it into T8 (phone jack receptacle) on the car top board. Tie-wrap the cord as required so it doesn't get pinched when the cab moves.
   e. Verify the phone is working.
2 If the cab does not have a cutout for a phone box, you will need to mount the phone directly on the COP wall as described.
   a. Determine where you want to mount the phone on the COP wall and drill a hole big enough to feed the phone cord out through the wall.
   b. Feed the cord out through the wall.
   c. Mount the phone on the COP wall using the screws provided with the phone.
   d. Route the phone cord to the car top box and plug it into T8 (phone jack receptacle) on the car top board. Tie-wrap the cord as required so it doesn't get pinched when the cab moves.
   e. Verify the phone is working.

IMPORTANT

Do NOT turn over the elevator prior to having an active phone line and having properly tested the phone or automatic dialer phone (as applicable).

Step 27
Install car top box

Install the car top box and connect the wiring.

Procedure

1 Mount the car top box on top of the cab using the hardware provided.

NOTE

Install the car top box near an entrance for easier access to activate the car top stop switch and for service.

Figure 95
Car top box

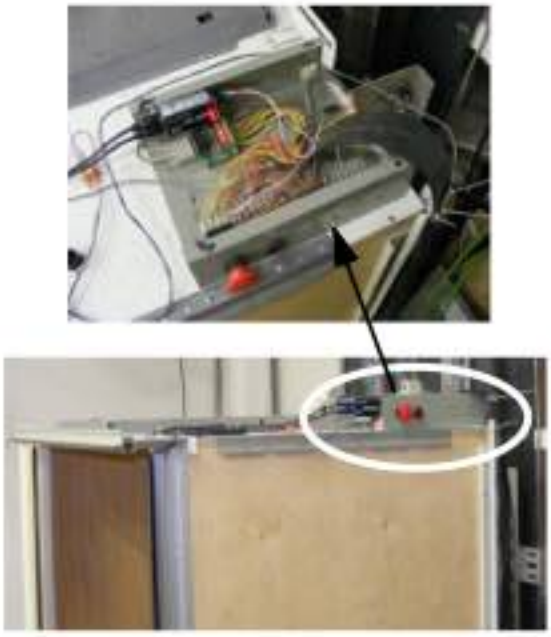

2 Insert the traveling cable into the car top box through the appropriate cutout. For the standard flat traveling cable, you will need to install the adapter brackets shown below (part no. 326180 and 326181) before connecting the traveling cable to the round cutouts in the car top box and controller box.

Figure 96
Adapter brackets for flat traveling cable

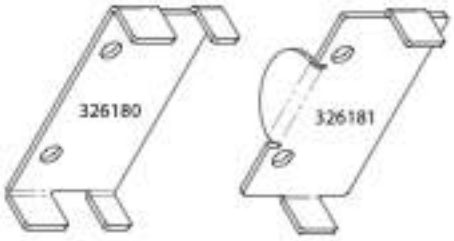

NOTE

The flat traveling cable is standard. The round traveling cable is optional at an additional cost.

a. Install the brackets on the flat traveling cable (see below) and secure with the hardware provided.

b. Connect the traveling cable to the car top box as described below.

NOTE

Be sure to connect the **pre-wired end** of the traveling cable to the car top box.

Figure 97
Adapter brackets installed on flat traveling cable



3 Make the following connections to the car top box per the drawing on the next page:

- Pre-wired end of traveling cable to car top box T1, T2, T3, T4, T5, T7
- Tape reader - T6
- Phone - T8
- Fan - T9
- Cab pot-lights - T10
- Car operating panel (COP) - T11, T12, T13
- Selector (tape reader) switches - T14
- Car top stop switch - T15
- Final limit switch - T17, pins 1 and 2
- Slack rope switch - T17, pins 3 and 4
- Front gate operator - T18 (in a later section)
- Rear gate operator - T19 (in a later section)
- Transformer - T20
- Buzzer - T21
- Aux power - T22

NOTE

Don't forget to connect the cable from J6A on the tape reader selector PCB to J6 on the car top board.

Figure 98
Car top box - automatic connection diagram (24 VDC gate operator)

AUTO PANEL FOLD
(Gatemate and Bifold 24 Vdc Gate Operator)

LED	Description
LED1	Selector P1 positioning input indicator
LED2	Selector P2 positioning input indicator
LED3	Selector P3 positioning input indicator
LED4	Selector DL (down levelling) input indicator
LED5	Selector UL (up levelling) input indicator
LED6	Selector DZ (door zone) input indicator
LED7	Selector POWER (+24V) indicator

REVISIONS

REV	ECO NO.	DATE	REVISED BY
000	C4	01/18/11	1ST RELEASE
001	C4	03/15/12	CQ
004	C4	05/22/14	CQ
005	C4	10/27/14	CQ
006	C4	12/17/15	CQ
007	C4	10/20/16	CQ
008	C4	04/18/18	CQ
009	C4	04/20/18	JS
010	C4	JUNE 25/19	JS
011	R1414	NOV. 18/21	JS

IMPORTANT!
Confirm voltage of gate operator before changing any car top wiring.

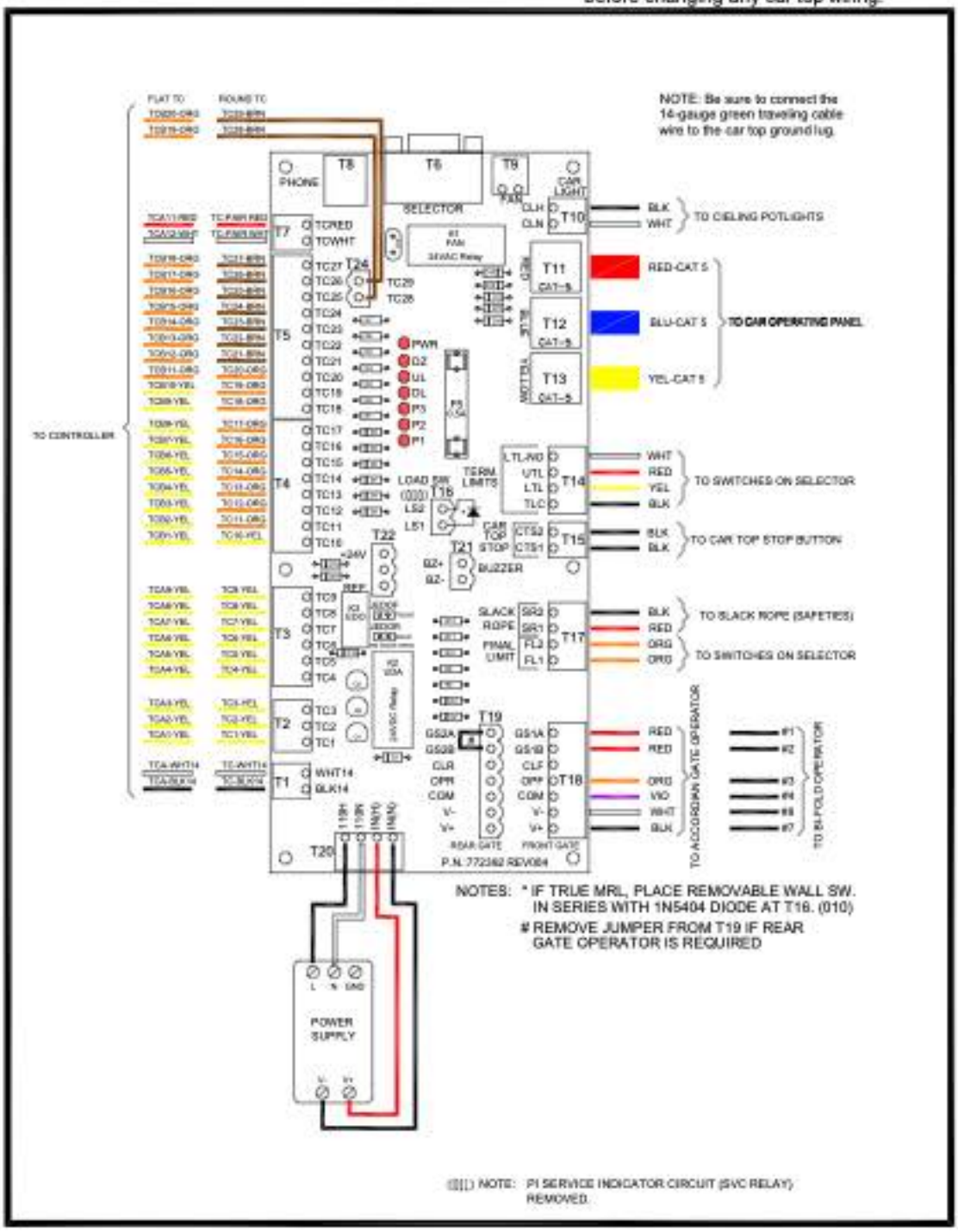

Figure 99
Car top box - manual connection diagram (120 VAC gate operator)

AUTO PANEL FOLD
(Porta 120 Vac Gate Operator)

LED	Description
LED1	Selector P1 positioning input indicator
LED2	Selector P2 positioning input indicator
LED3	Selector P3 positioning input indicator
LED4	Selector DL (down levelling) input indicator
LED5	Selector UL (up levelling) input indicator
LED6	Selector DZ (door zone) input indicator
LED7	Selector POWER (+24V) indicator

REVISIONS			
REV	ECO NO.	DATE	REVISED BY
000	C4	01/18/11	1ST RELEASE
001	C4	03/15/12	CD
004	C4	05/22/14	CD
005	C4	10/27/14	CD
006	C4	12/17/15	CD
008	C4	04/18/18	CD
009	C4	04/20/18	JS
010	C4	JUNE 25/19	JS
011	R1414	NOV. 18/21	JS

IMPORTANT!
Confirm voltage of gate operator before changing any car top wiring.

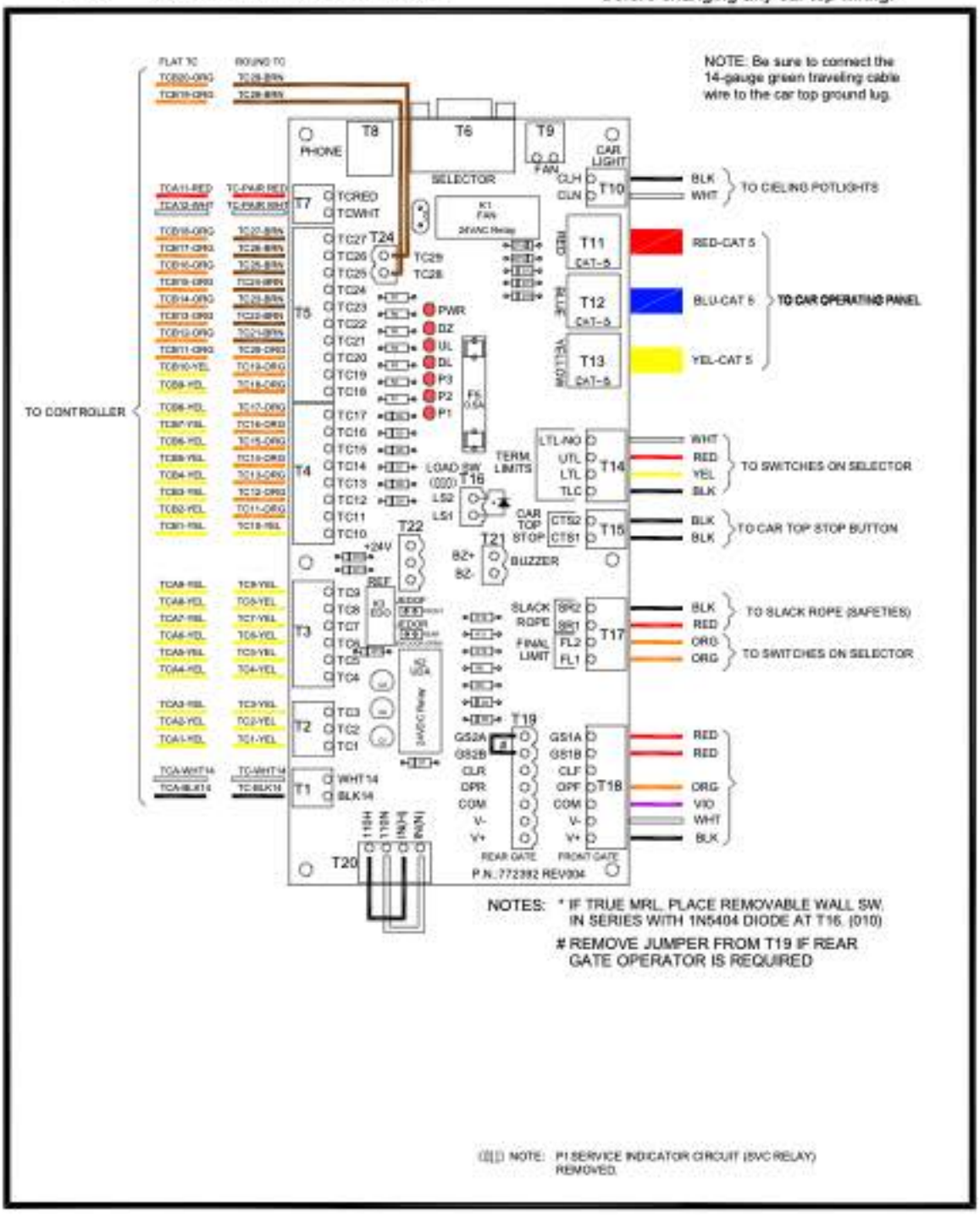

Step 28
Connect traveling cable

This section describes the traveling cable connections from the car top board to the main controller board.

Procedure

NOTE

The flat traveling cable is standard. The round traveling cable is optional at an additional cost. Routing of the traveling cable is always site-dependent. The traveling cable must always be fastened to the hoistway wall 12" to 14" higher than the halfway point of the travel (not including overhead from the top landing or pit depth.

⚠ CAUTION

Be very careful during installation of the traveling cable. Using the pendant slow speed function, move the cab up and down the full length of travel to verify that the traveling cable does not get caught in the cab.

FOR FLAT TRAVELING CABLE (STANDARD)

1 For the standard flat traveling cable, use the clamping wedge blocks (part no. 207121), the under-cab cable bracket and tension bracket to provide strain relief and guidance for the cable from the car top box to the controller box.
   a. Route the traveling cable from the car top box to the underside of the cab platform.
   b. Attach the traveling cable to the underside of the platform using the under-cab cable bracket. Secure the under-cab cable bracket to the bottom of the platform using #10 1/2" wood screws. Leave a large loop of cable at the point where the traveling cable exits the under-cab cable bracket. The loop must be large enough to accommodate the full up and down travel of the elevator.
   c. Insert the cable under the clamping wedge block (part no. 207121).
   d. To support the load of the cable, install the tension relief bracket on the hoistway wall 12" to 14" higher than the halfway point of travel (not including overhead from the top landing or the pit depth).
   e. Ensure that when the elevator is run to the top floor, there is at least 12" (305 mm) of cable hanging below the tension relief bracket and a gentle bend connecting to the cable. With the elevator at the bottom landing, ensure that the cable is not too tight and is not rubbing on the side of the platform or piling up on the pit floor. If the cable is not installed properly, short cable life will result.

Figure 100
Clamping wedge block (p/n 207121) for flat traveling cable





⚠ WARNING

Be sure to connect the 14-gauge green traveling cable wire to the chassis ground lug in the controller box. Be sure to connect the 14-gauge green traveling cable wire to the car top ground lug.

FOR ROUND TRAVELING CABLE (OPTIONAL)

2 For the optional round traveling cable, install the wire mesh system to provide strain relief and guidance for the cable from the car top box to the controller box.

Figure 101
Wire mesh system for round traveling cable



a. Install the cable guide bracket (part no. 229992) on the cab where the cable exits the car top box. Place the cable loop of the wire mesh over the top of the cable guide and feed the round traveling cable down through the mesh tube.

b. Tie-wrap the traveling cable to the cable guide bracket through the two holes in the top of the bracket.

c. Position the cab level at the lower landing.

d. Install the strain relief welded assembly (part no. 229996) on the hoistway wall 12" to 14" higher than the halfway point of travel (not including overhead from the top landing or the pit depth).

e. Loop the round traveling cable over the strain relief welded assembly (mounted on the hoistway wall) until the bottom loop of the cable is 1" off the pit floor. Note that the attachment point on the car top must be on the same side of the wall hanger as the active side for a proper loop.

Figure 102
Routing of round traveling cable using wire mesh system

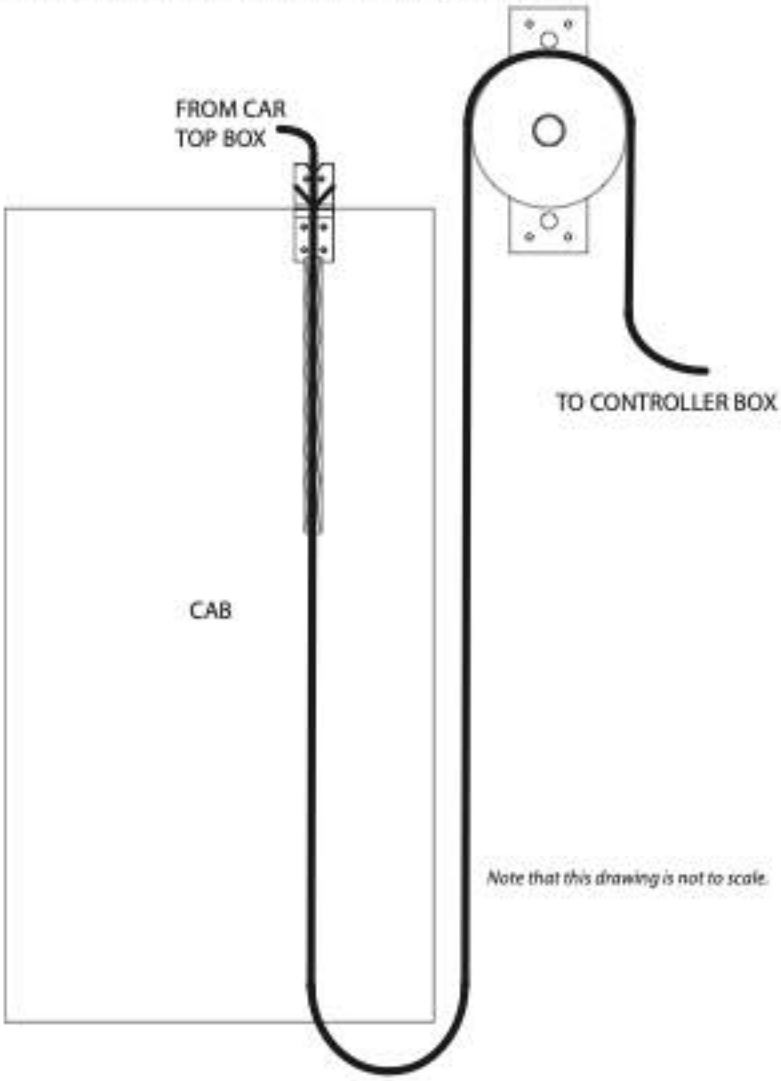

3 Route the traveling cable to the controller box.

4 Remove the temporary jumpers from J13 on the controller board.

IMPORTANT

There are jumpers pre-installed on J13 (TC10-13-15-17) so the elevator will start in temporary mode. Once these jumpers are removed and the traveling cable is connected, the lift will automatically reset (if power is cycled off then on again) by running to the bottom landing if the safety circuit/car gate/door locks are jumped out or closed.

5 Connect the controller end of the traveling cable to the connectors (J15, J14, J13, J10, J9 and J3-IN1) on the controller board as shown at the right.

- TC27 connects to J3-IN1 on the right side of the controller board (not shown here).
- The TC white and black wires terminate at J6 on the top of the controller board (not shown here).

⚠ WARNING

Be sure to connect the 14-gauge green traveling cable wire to the chassis ground lug in the controller box. Be sure to connect the 14-gauge green traveling cable wire to the car top ground lug.

Figure 103
Traveling cable connections to main controller board

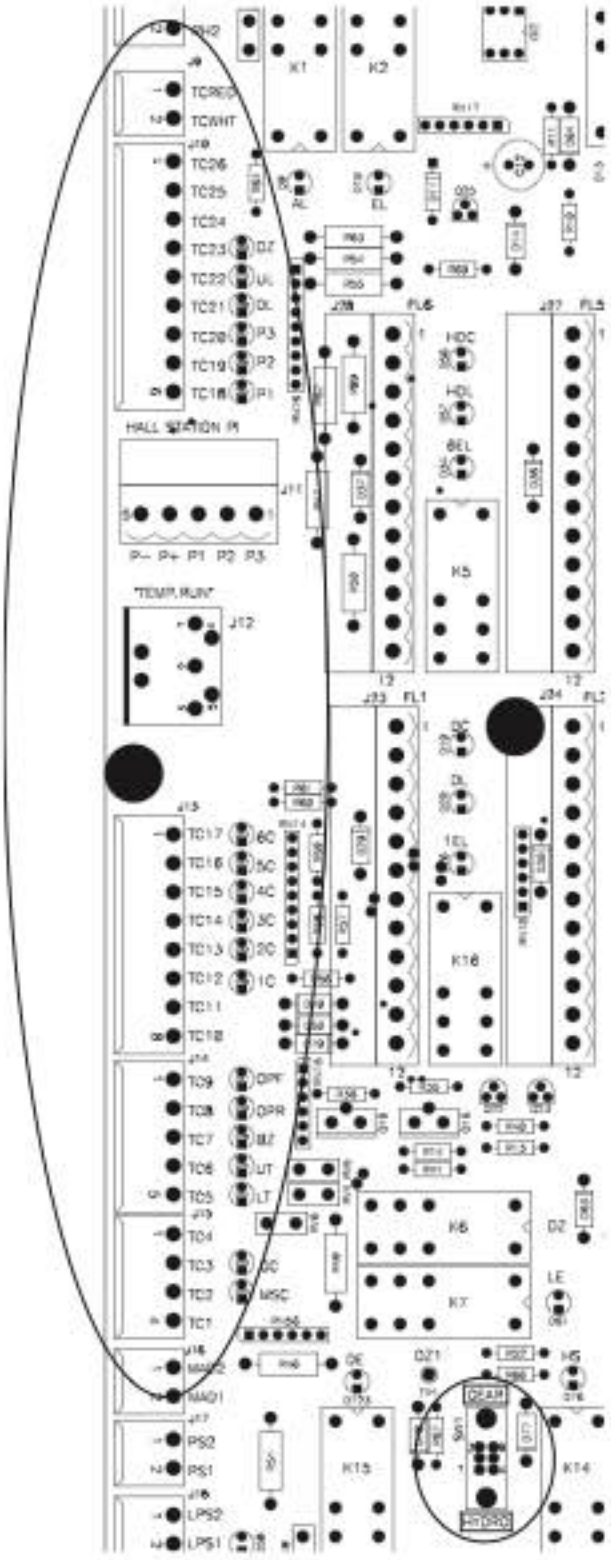

NOTE

Make sure that switch SW1 is set for GEAR or HYDRO as required for the installation.

Step 29
Install gate pocket

Install the gate pocket.

Procedure

1 Attach the pocket to the cab sill and fasten in the order of 1, 2, and 3 as shown below.

Figure 104
Gate pocket on sill

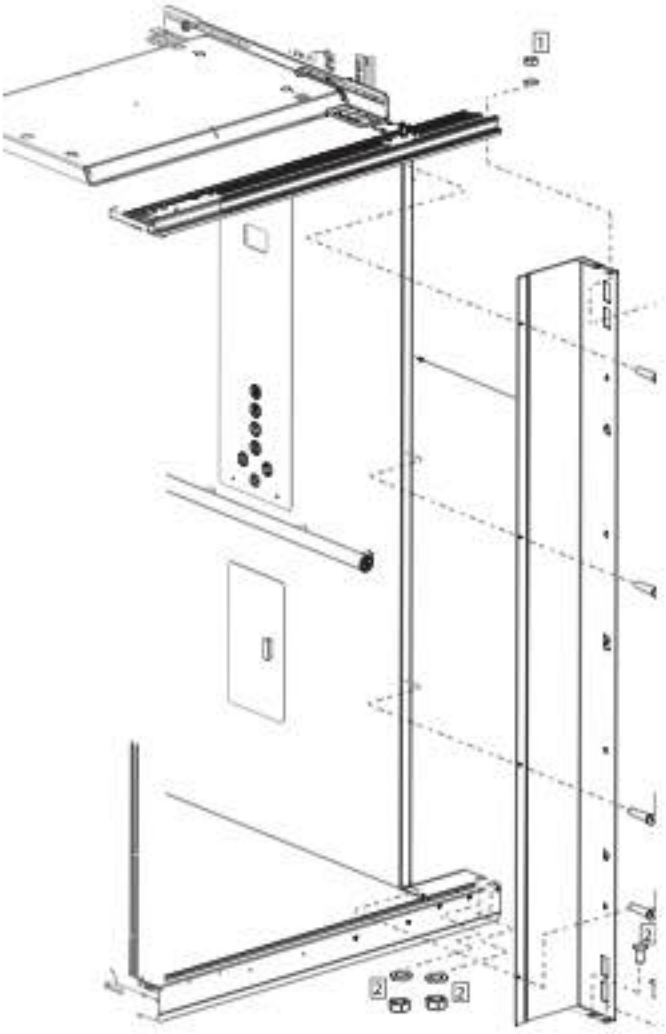

Attach with pre-pack 226660 containing:
1) 1 x ¼"-20 x 1½" hex head bolt and 1 x ¼" lock washer
2) 2 x ¼"-20 x 1½" Phillips head screws and 2 x ¼" lock wa
3) 2 x ¼"-20 x 2½" hex head bolts

Step 30
Assemble gate

Assemble the gate.

Procedure

1 Remove the screws along the track to partially pull out the plastic insert.

Figure 105
Gate track plastic insert



2 Partially pull out the plastic insert from the top of the gate track. This must be pulled out to insert the gate onto the track.

Figure 106
Gate track plastic insert pulled out



3 Disassemble the two screws at the top front of the gate track on the slam post side and remove the corner piece.

Figure 107
Gate track corner piece location

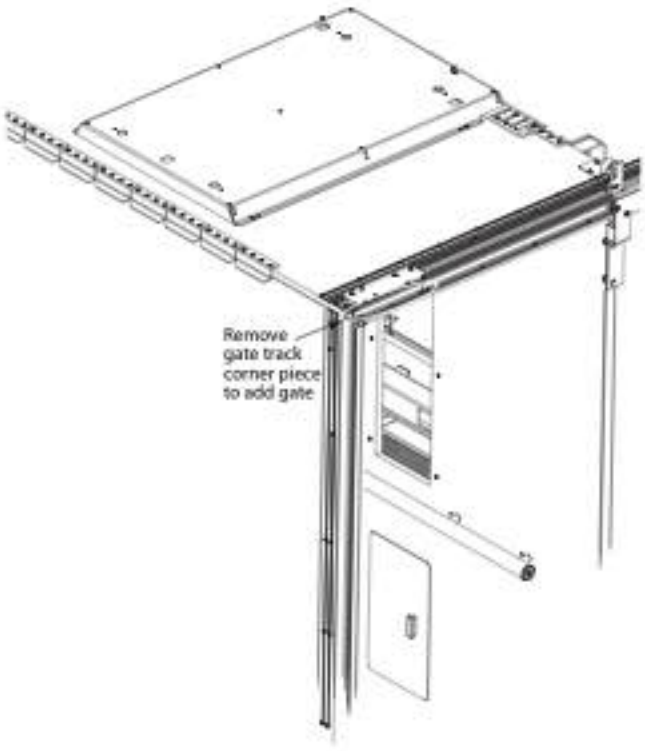

Figure 108
Gate track corner piece

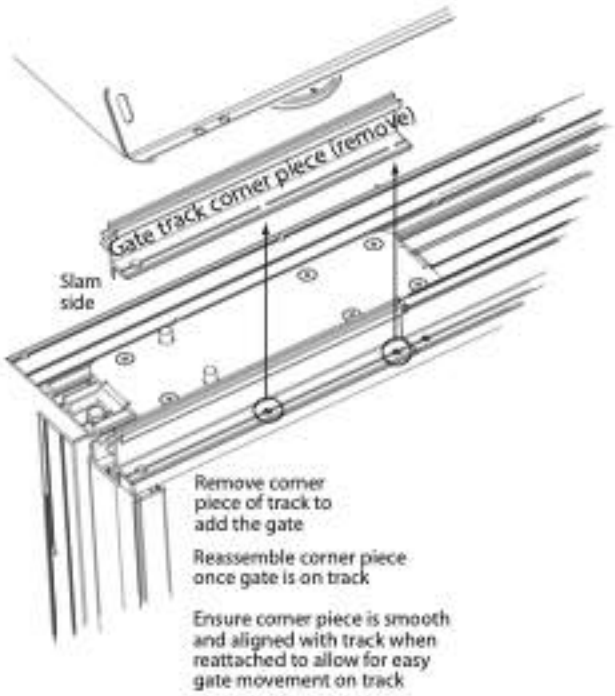

4 Remove the large operator mount plate (if equipped) to help with gate installation.

Figure 109
Remove large operator mount plate

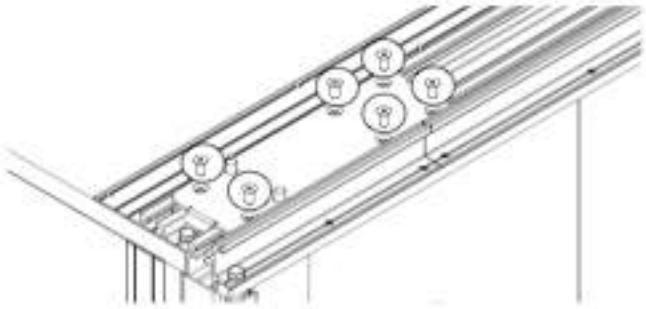

5 Place the gate onto the track at the corner piece area and slide to the pocket side.

Figure 110
Gate on track

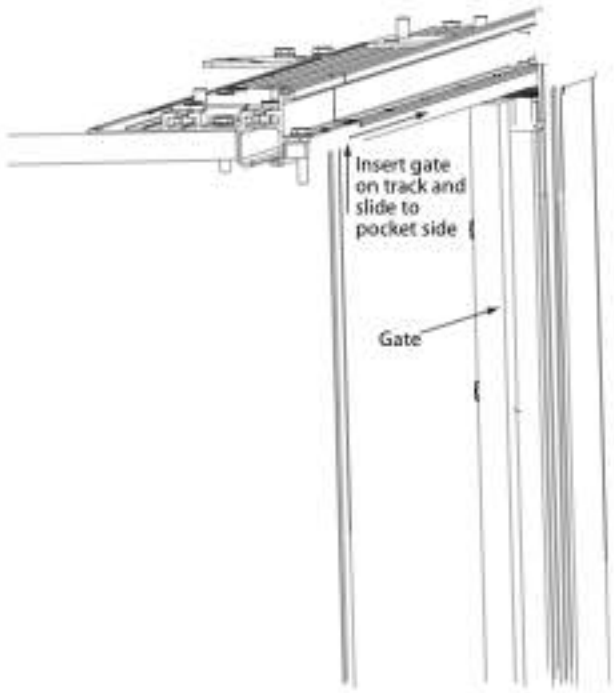

6 Place the operator mount plate (if equipped) back onto the gate track.
7 Install the plastic insert back onto the track.
8 Reassemble the screws and the corner piece to the top of the track.
9 Place the flanges (PN 106151) into the gate holes and push the gate into the pocket. The flanges insert into the pocket holes. There is no other attachment necessary for the gate to attach to the pocket.

Figure 111
Flanges into gate

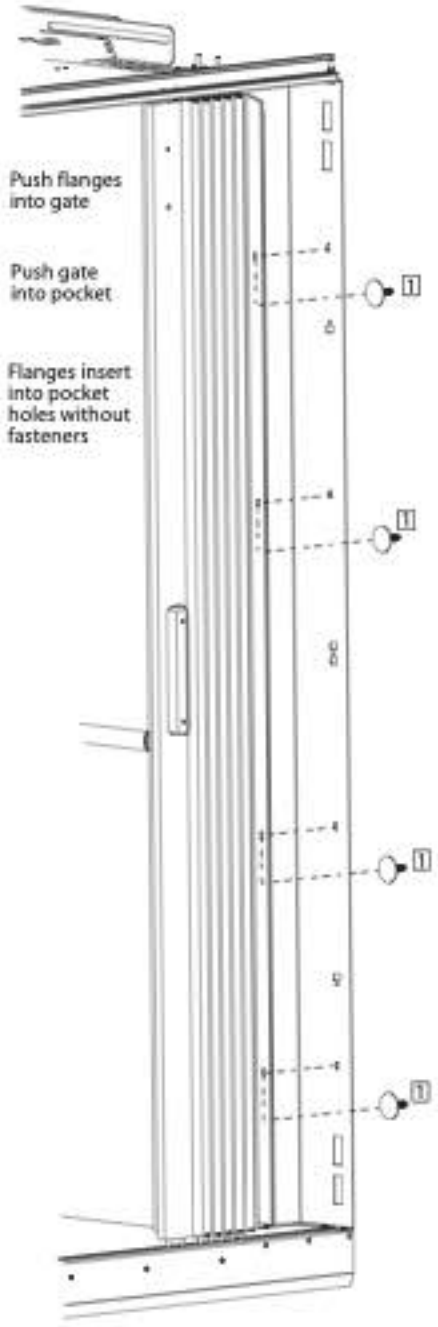

10 Be sure to attach the magnet plate for the gate to the slam side.

11 Place the gate stabilizer bar onto the gate track at the gate track corner piece area and slide to the pocket side.

Figure 112
Stabilizer on gate track

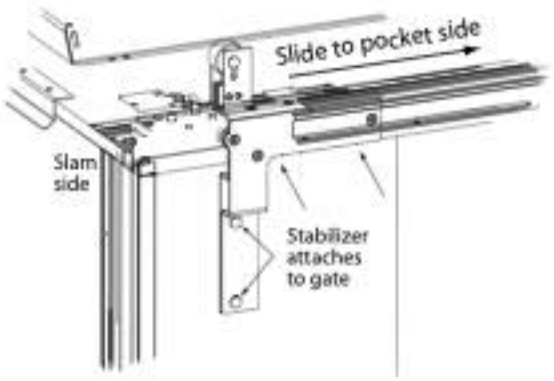

12 Assemble the stabilizer bar to the gate; line up the holes on the gate stabilizer and gate strut.

Figure 113
Gate attachment to stabilizer

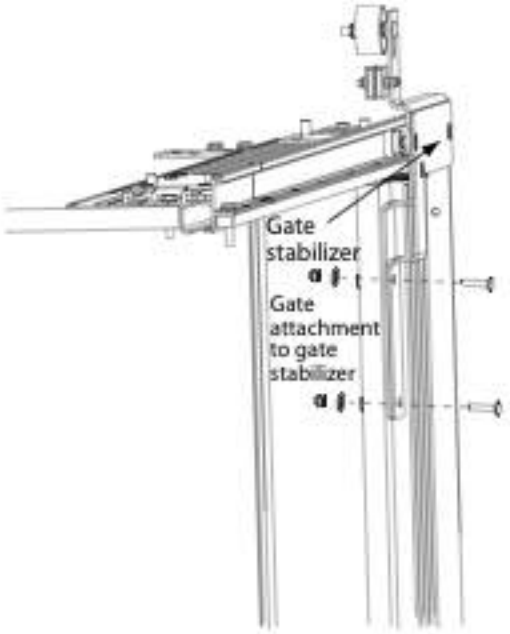

Attach with pre-pack 226442 containing:
2 x ¼"-20 x 1¼" carriage bolts

13 Reattach the front gate track corner piece.

14 Assemble and bolt the ceiling corner at the slam.

Figure 114
Ceiling to slam

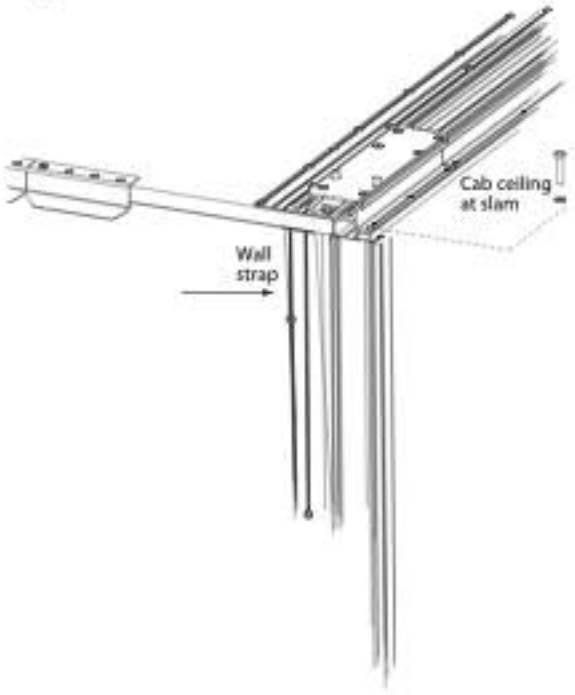

Attach with pre-pack 226660 containing:
2 x ¼"-20 x 1½" hex head bolts
2 x ¼" lock washers

15 Attach the floor support bracket to the floor.

TO ASSEMBLE THE ENTERPRISE GATE

1 Line up and tighten all gate rollers.
2 Remove the gate track from the ceiling.
3 Load the gate into the sill track.
4 Slide the ceiling gate track onto the gate rollers.
5 Tilt the gate and track up to the ceiling.
6 Reinstall the track bolts to secure it to the ceiling.
7 The pocket should have pre-drilled holes (top and bottom) for through bolts. Bolt through the fixed post with the threads through the pocket, and then install washers and nuts from the car top and from under the platform.

Figure 115
Install Enterprise gate

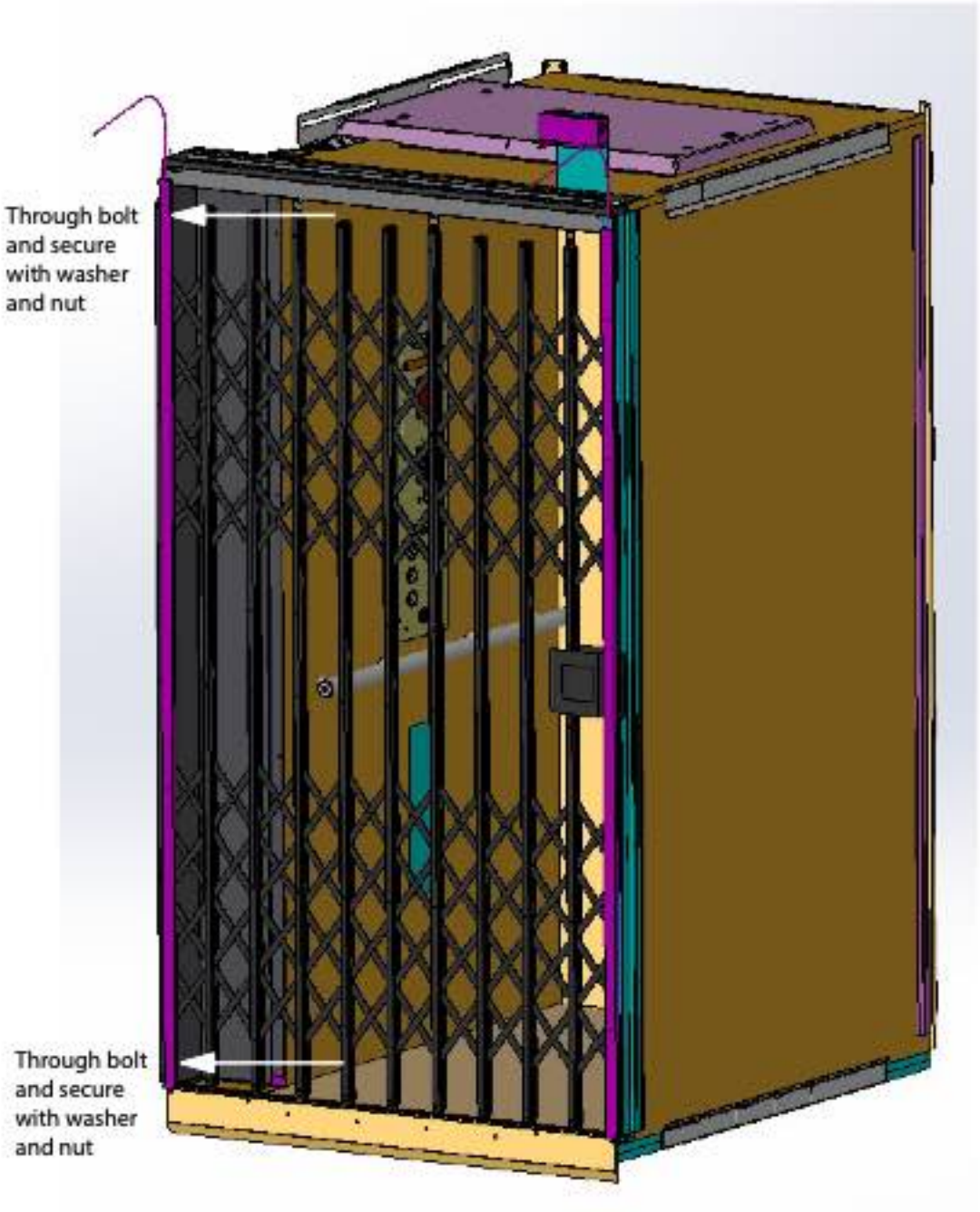

Step 31
Gate operator (Porta or Savaria Gatemate)

Attach EITHER the PORTA gate operator or the Savaria GATEMATE operator.

Considerations

If installation includes an automatic gate closer, you'll have either a left-hand or right-hand operator:
- 226142 - left hand (Porta) or 226143 - right hand (Porta)
- 227700-LCHN - left hand (Gatemate) or 227700-RCHN - right hand (Gatemate)

Figure 116
Gate operator right hand

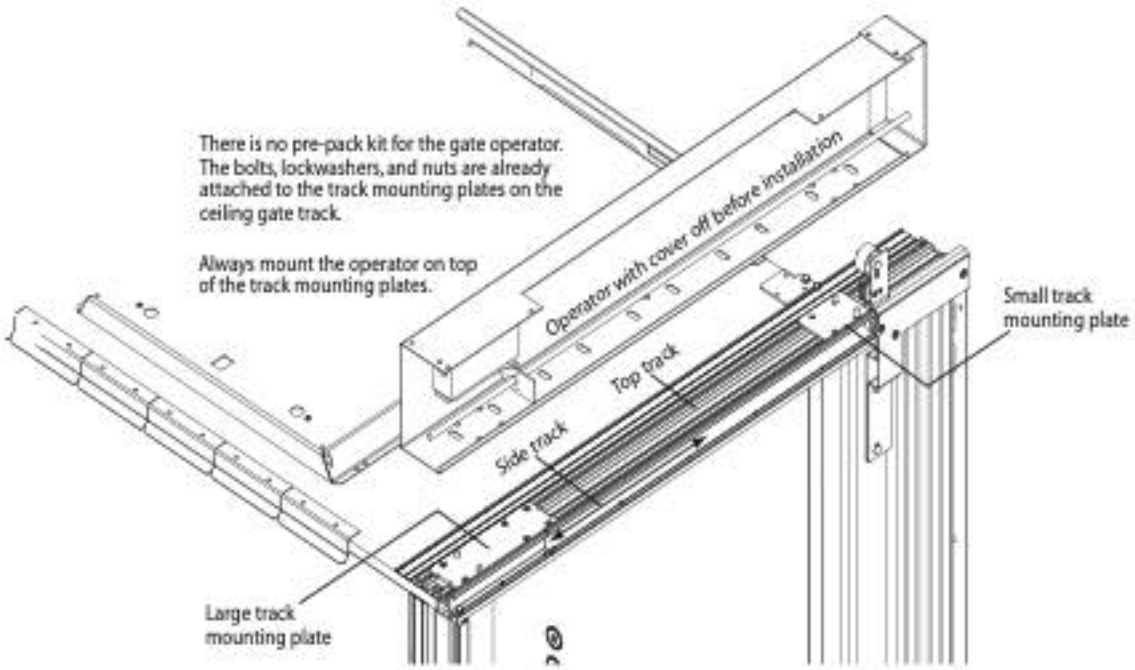

Procedure

1 Ensure the gate can manually slide across the track without friction.
2 Remove the cover from the operator.
Loosen the screws and pull the cover off of the operator body.

Figure 117
Operator cover removal

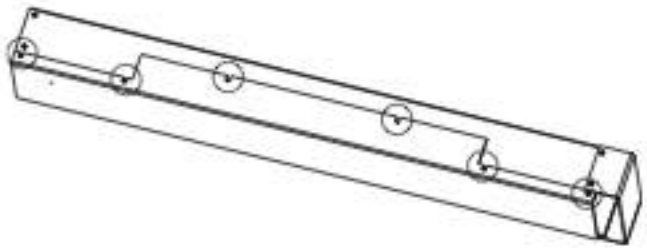

3 Detach the nut and lock washer from the two pem stud bolts on the large and small mounting plates on the cab ceiling track.

Remove with...

4 x $\frac{5}{16}$" hex nut
4 x lock washer

4 Place the operator on the top track through the pem stud bolts and carriage bolts. Ensure the distance from the center of the pem stud bolts to the edge of the track is $3\frac{3}{8}$".

Figure 118
Place operator on track

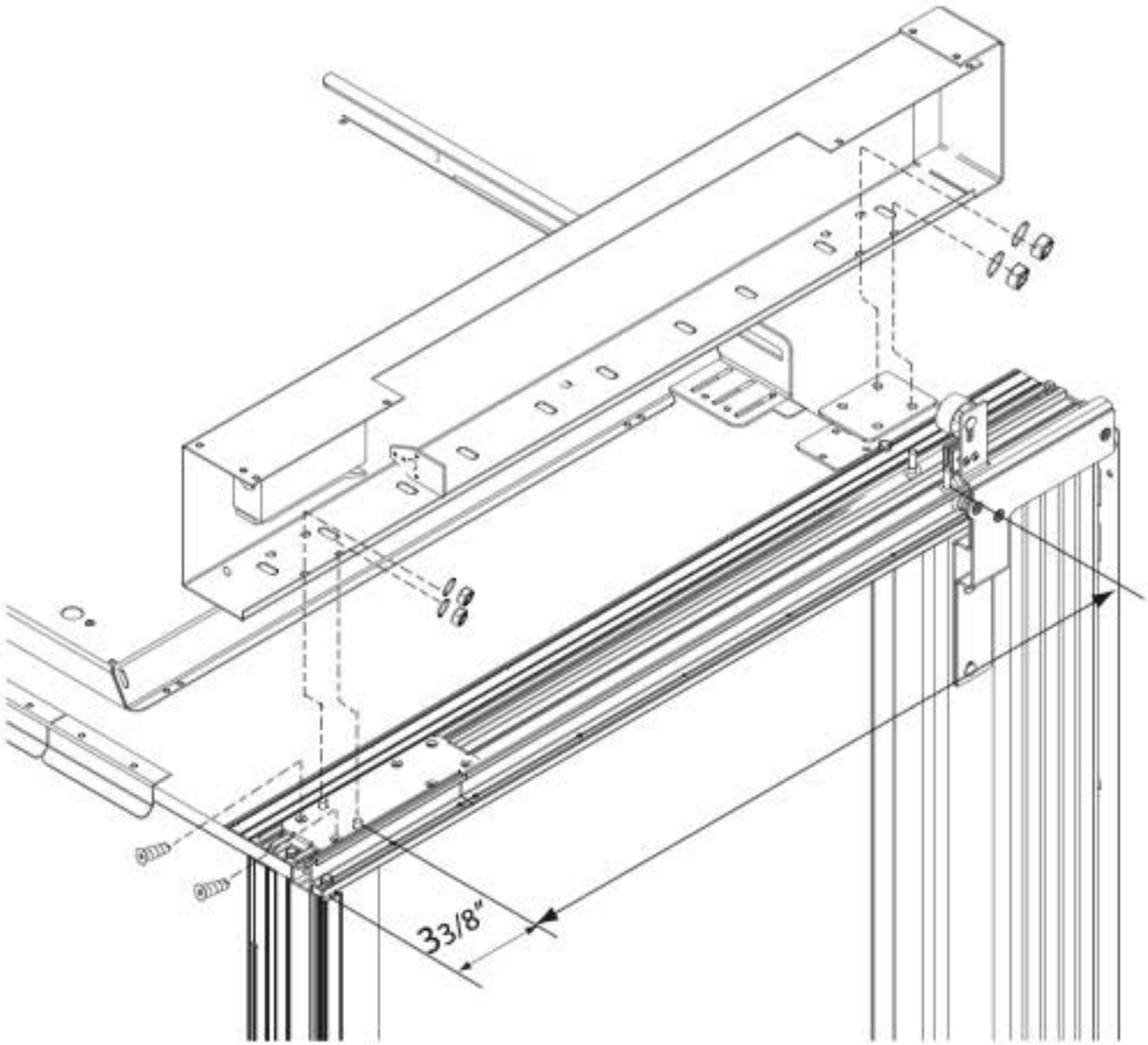

5 Ensure the operator overhangs the slam side of the cab by $\frac{3}{4}$".

Figure 119
Operator overhangs cab

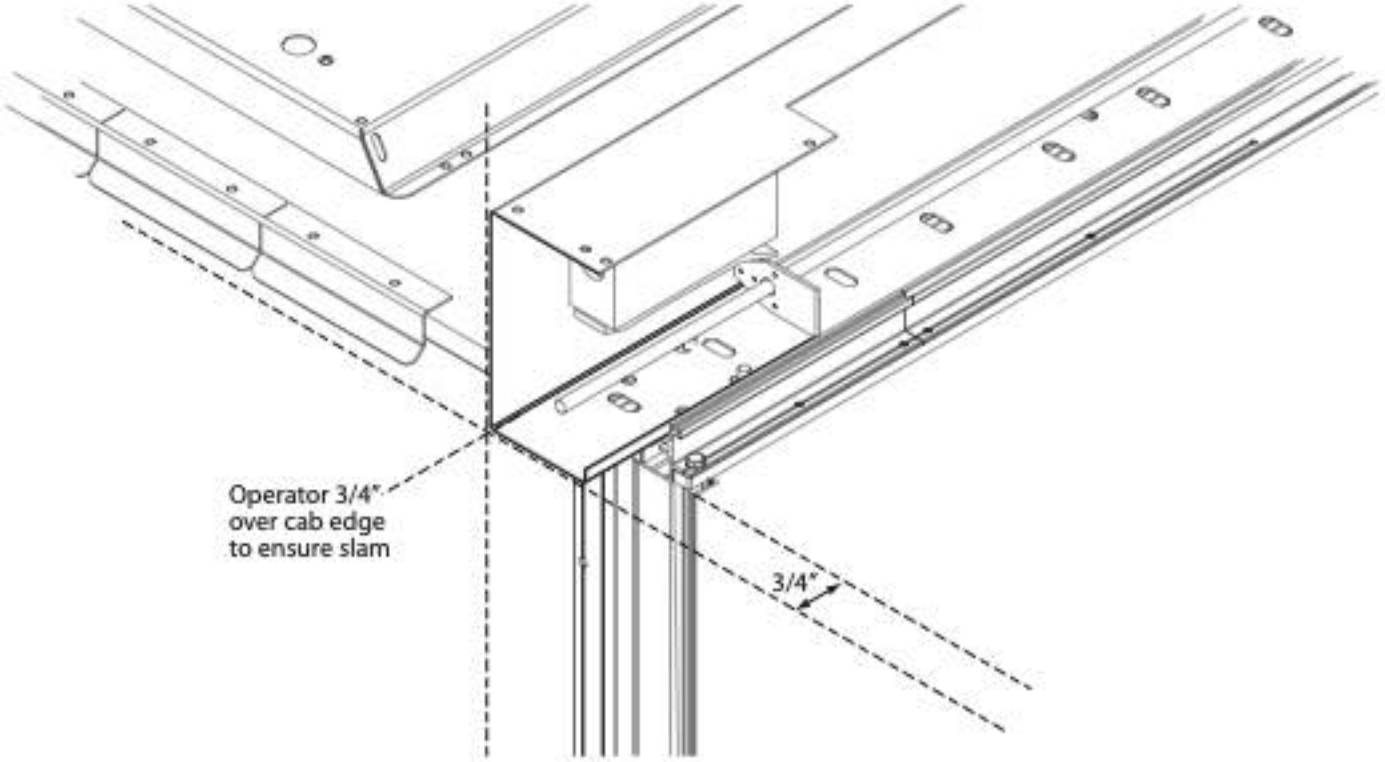

6 If the operator does not overhang the slam side of the track and cab, remove the operator to adjust the large and small track mounting plates as required.

a. Loosen or remove the screws from the large mounting plate.

b. Slide the large mounting plate along the track to adjust.

Figure 120
Large mounting plate adjustment on track

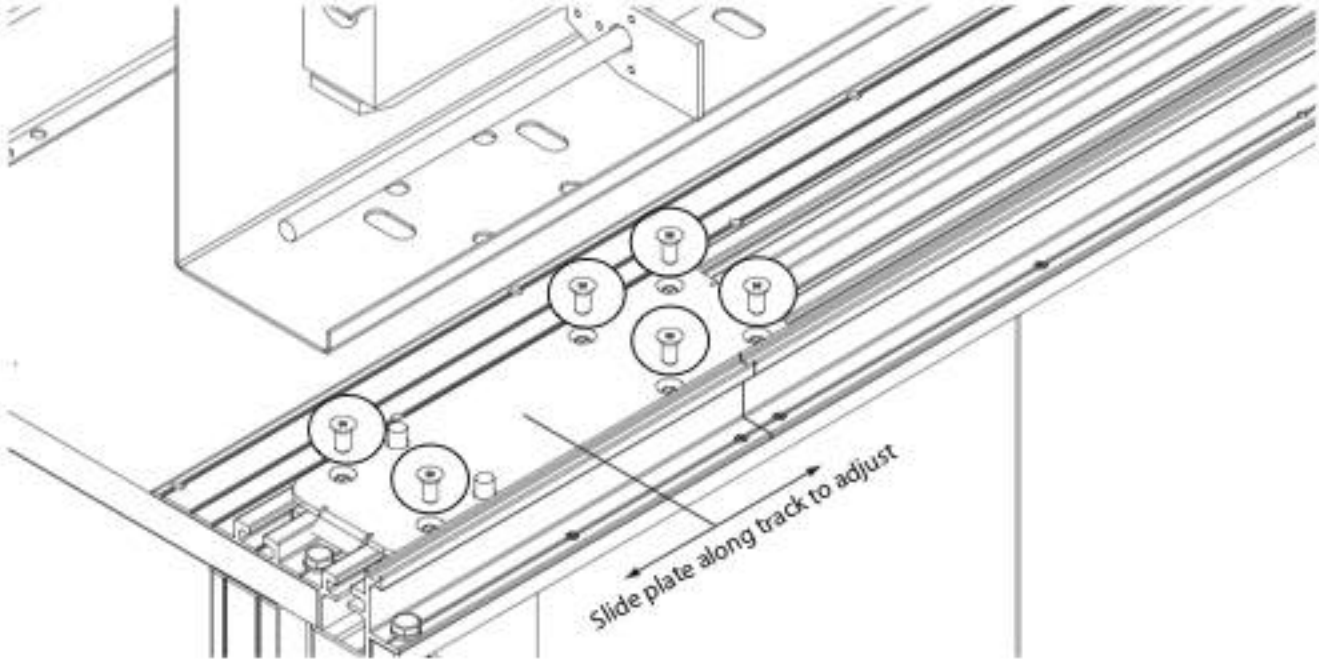

c. If the large mounting plate does not move along the track, remove the plate from the track and slide the pem stud bolt brackets to adjust.

Figure 121
Pem stud brackets

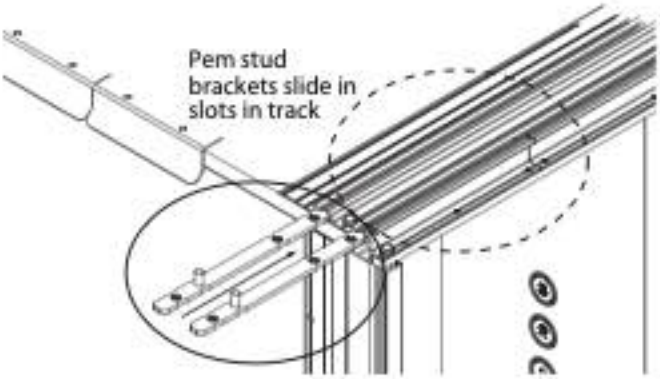

d. Reattach the large mounting plate to the track over the pem stud bolt brackets.

e. Slide the small mounting plate along the track to adjust.

Figure 122
Small mounting plate adjustment on track

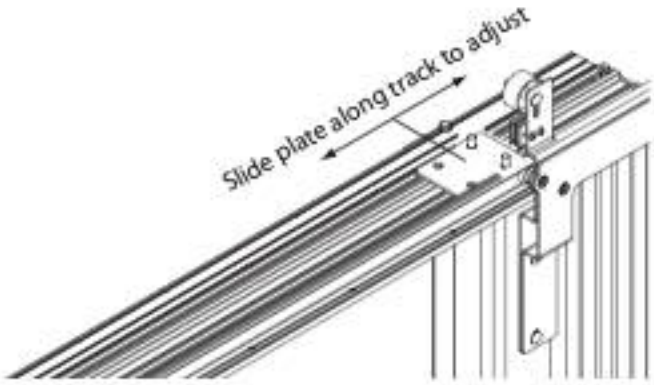

f. Place the operator back on the track and ensure it is flush on the slam side. Refer to Figure 119 on page 72.

7 Tighten the pem stud bolts and carriage bolts with the lock washers and nuts.

8 Attach the floor support bracket 226608 to the cab floor on the gate opening side at the rail once the cab wall assembly is complete.

Figure 123
Floor support bracket

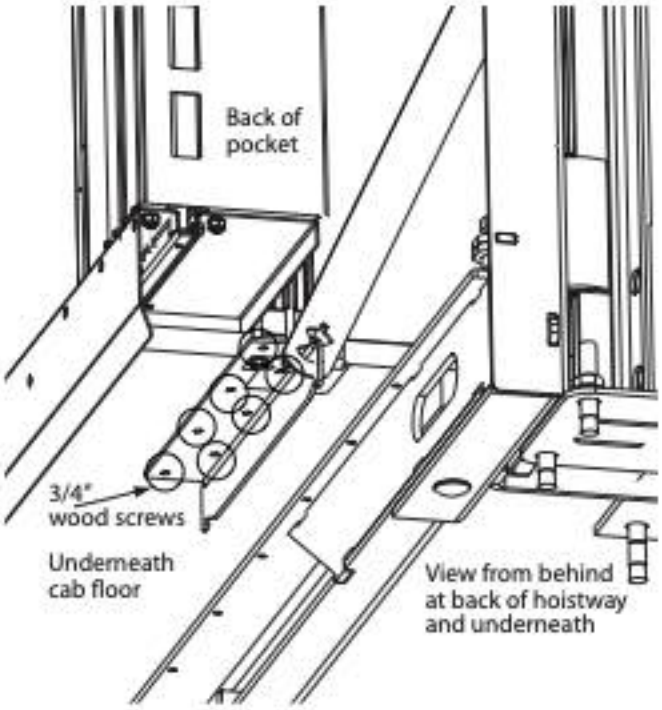

Electrical installation

Wire the gate operator to the car station junction box.

Procedure

1 The operator wiring harness feeds through the grommet hole at the back of the operator.

Figure 124
Wires through grommet hole

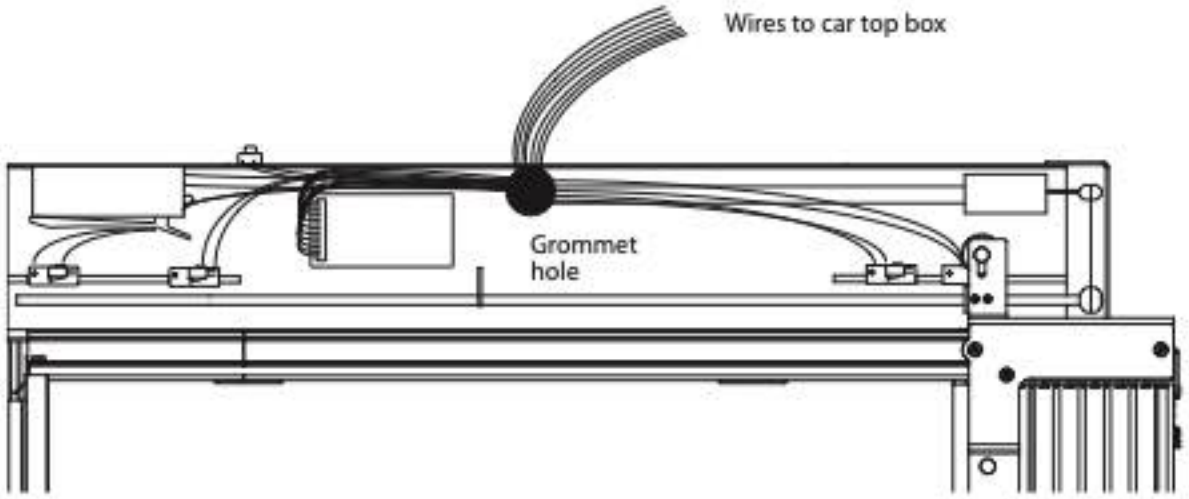

2 Connect the gate operator wires to the car top board at either T18 (for the front operator) or T19 (for the rear operator). *See the Electrical Schematics for more information.*

3 Tie off any extra wire leading from the operator to the car top board.

Gate operator board and limit switch settings

Adjust the operator board and limit switches to allow for gate open and close operation.

Procedure

1 Power on the operator using the power **ON/OFF** switch.

Figure 125
PORTA ON / OFF switch

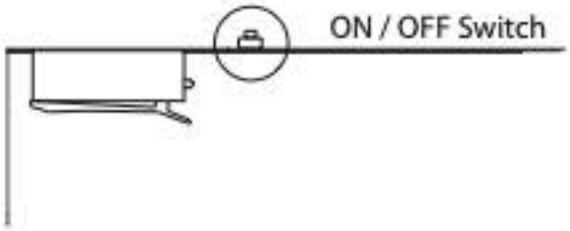

2 Check that the PORTA board power LED is **ON**.

Figure 126
Operator board power LED

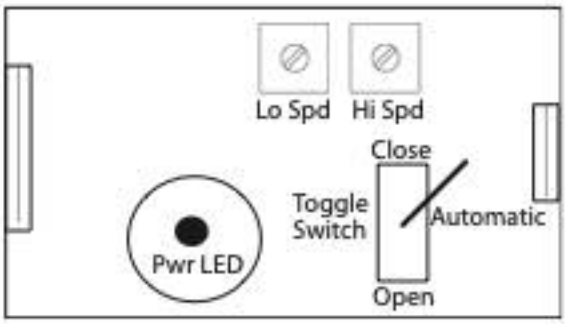

3 Push the gate until the gate stabilizer bar magnets contact the operator plate.

Figure 127
Gate stabilizer magnets contact at operator plate

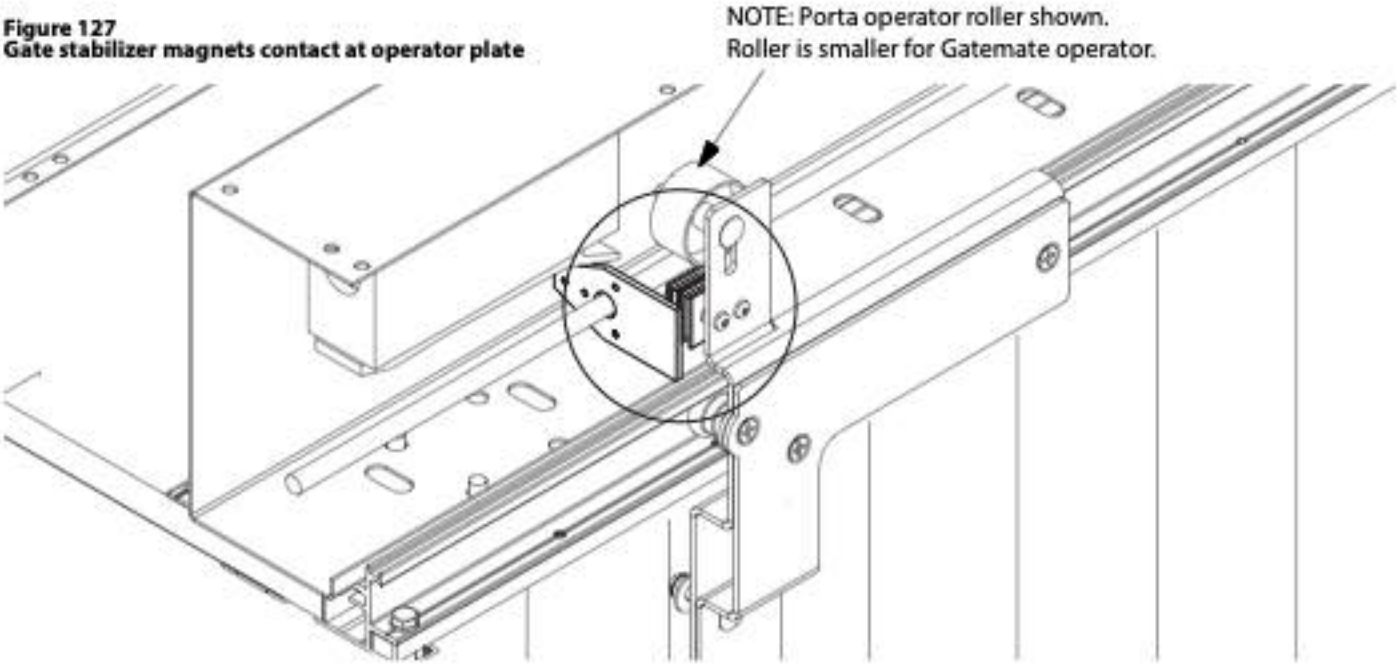

4 Adjust the limit switches (open and close) and the slow speed limit switches. Move the slam side final limit switch so it is vertically flush with the door slam.

Be sure to set the switch contact point (open/close) button so it is flush with the slam.

Figure 128
Final limit switch vertically flush with slam

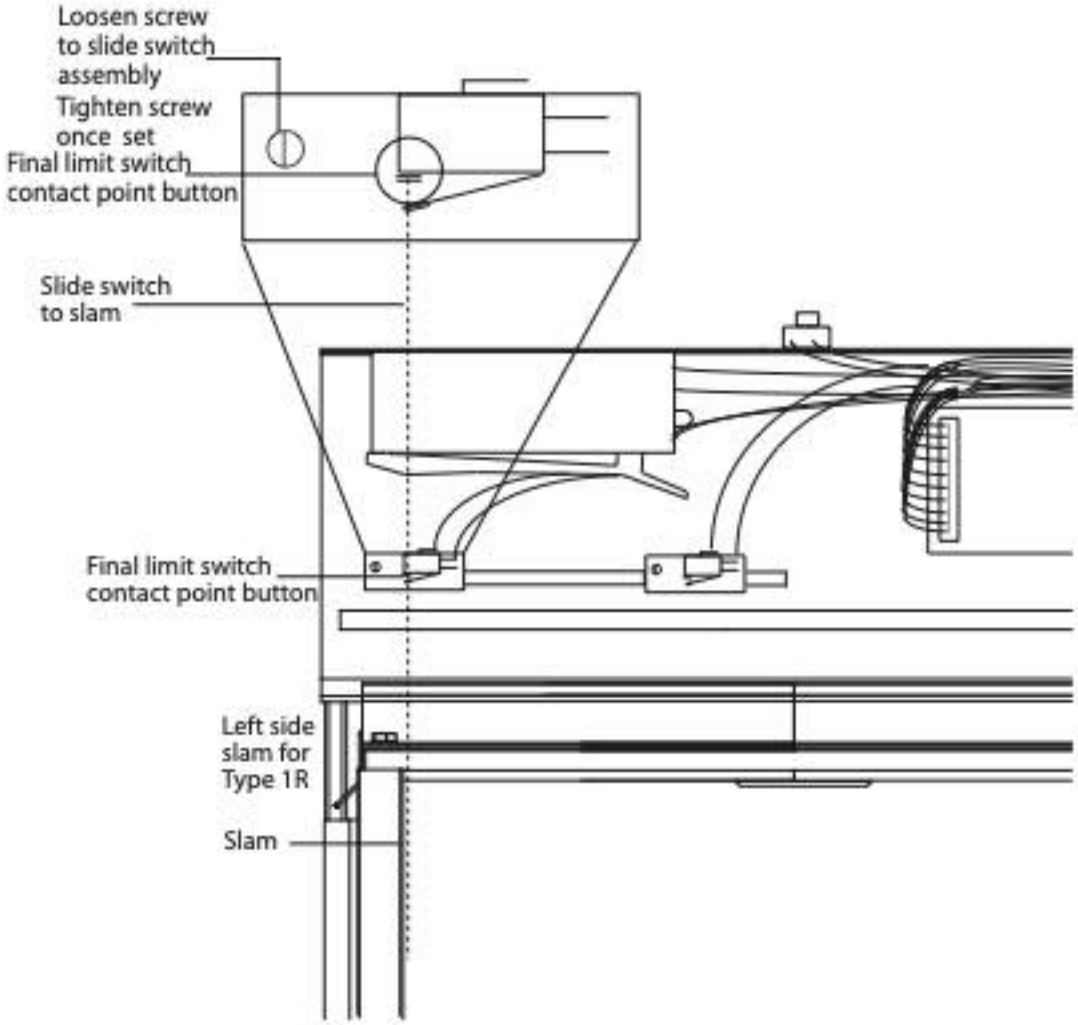

5 Slide the pocket side final limit switch contact point button so it is vertically flush with the wall at the pocket.
Be sure to set the switch contact point (open/close) button so it is flush with the wall at the pocket.

Figure 129
Final limit switch contact point button vertically flush with wall at pocket

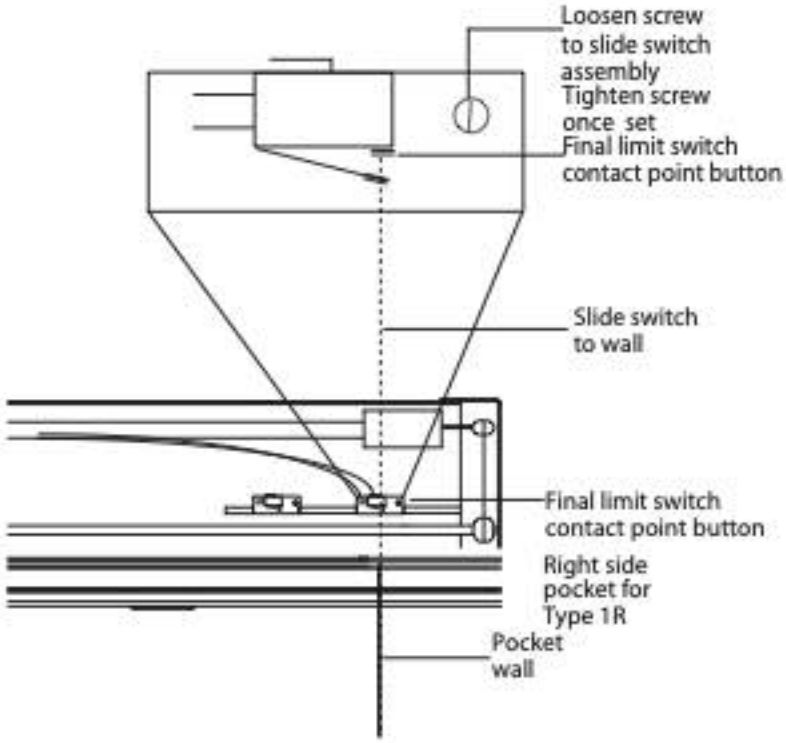

6 Slide the slow limit switches on each side to approximately six inches from the final limit switches.

Figure 130
Slow limit switches

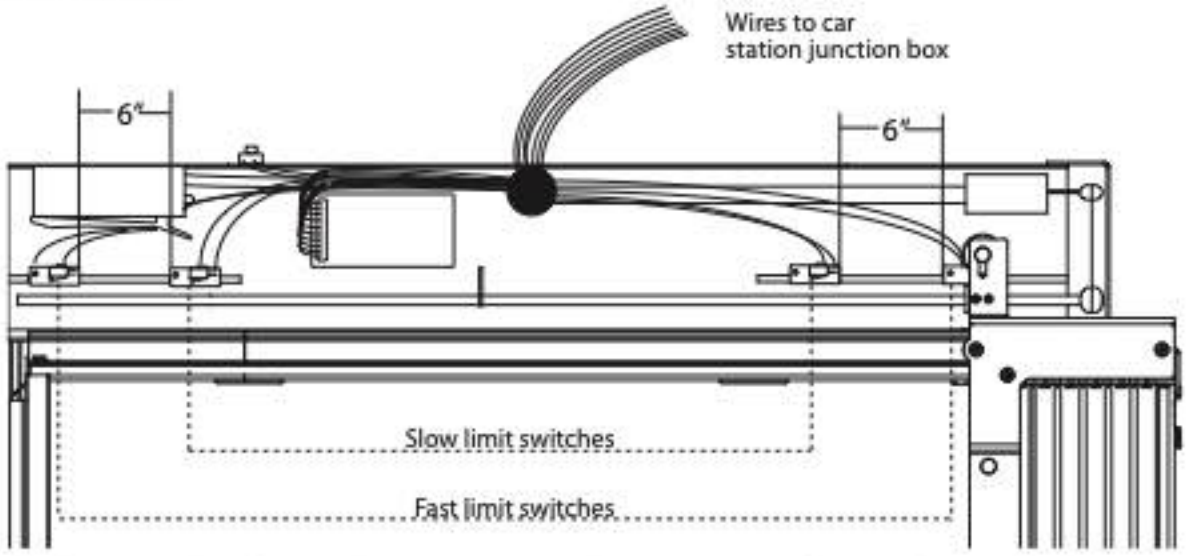

7 Flip the operator board Open/Close/Automatic switch to **CLOSE** to test the gate close into the slam.
The gate should close completely.

8 Flip the operator board Open/Close/Automatic switch to **OPEN** to test the gate open into the pocket.
The gate should open until it is flush with the cab wall at the pocket.

Figure 131
Operator board toggle switch

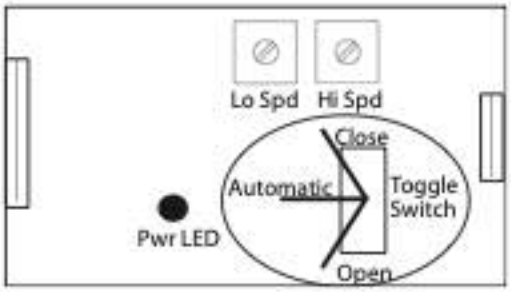

9 Adjust the POTs on the operator board as required for either more or less *high* speed, or more or less *low* speed.

Turning the low speed POT counterclockwise ensures the low speed is slower.
Turning the hi speed POT counterclockwise ensures the high speed is slower.
Turning the low speed POT clockwise ensures the low speed is faster.
Turning the hi speed POT clockwise ensures the high speed is faster.

Figure 132
Operator board POTs

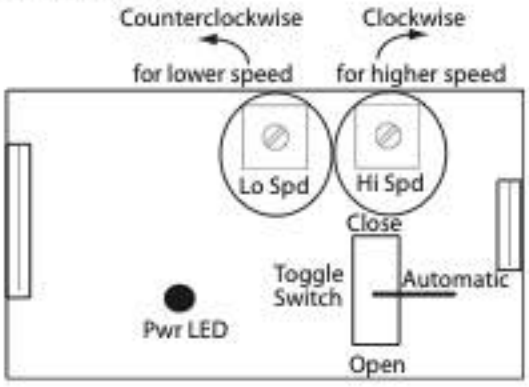

10 Once the *slow-* and *high-* speeds are set with the manual toggles for *open* and *close*, switch to **AUTOMATIC** for normal operation.

11 Run the elevator up and down with the COP buttons to ensure the operator opens and closes the gate correctly in automatic mode.

12 Reinstall the cover.

Figure 133
Operator cover

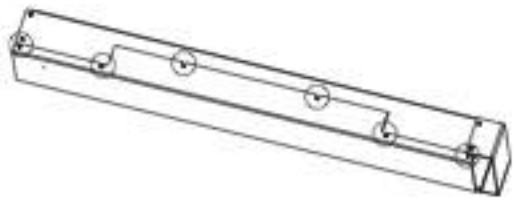

Figure 134
PORTA operator board

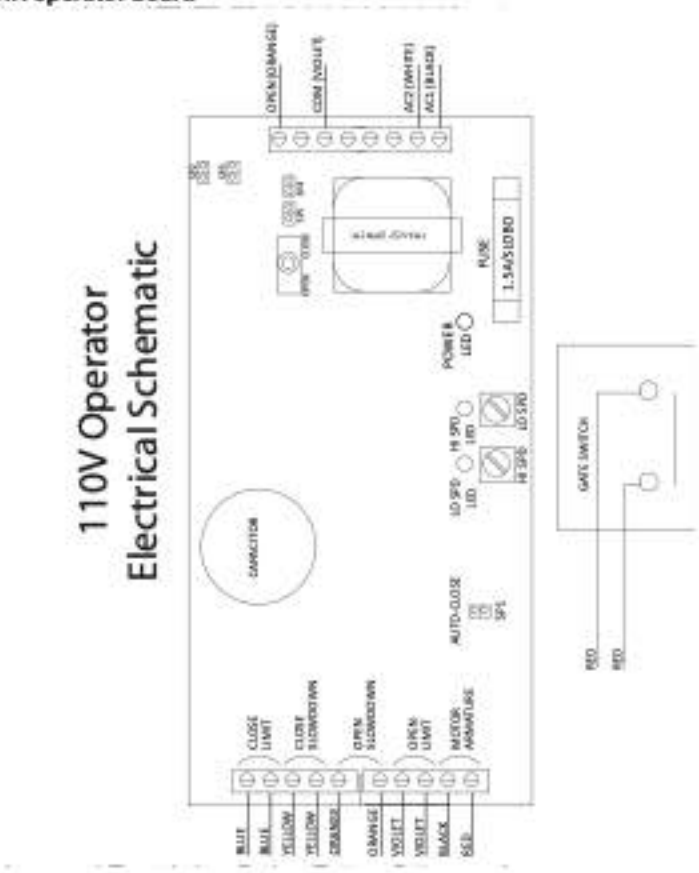

Figure 135
GATEMATE operator board

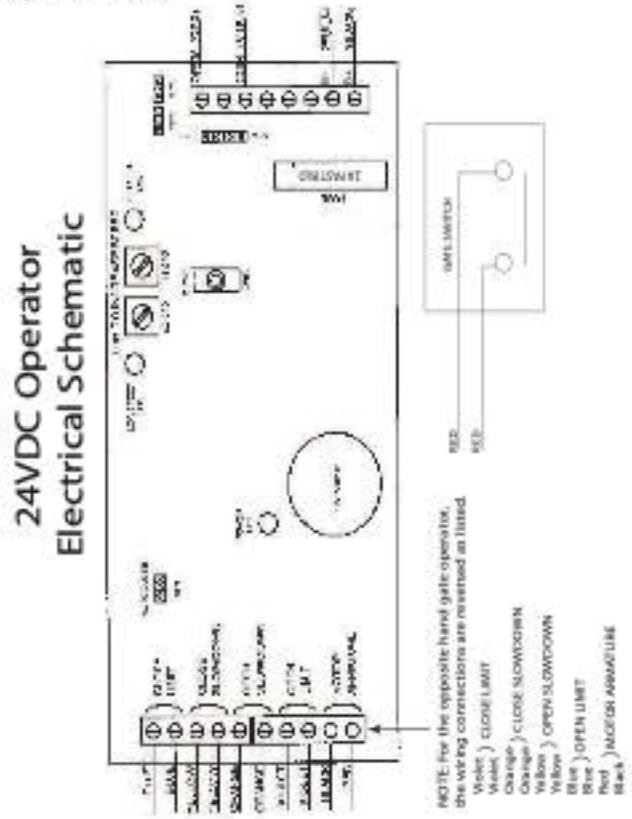

Step 32
Install manual gate switch

Install the manual gate switch.

Procedure

1 Disassemble the nut and lock washer from the one pem stud bolt on the large track mounting plate.

Figure 136
Large track mount plate pem studs

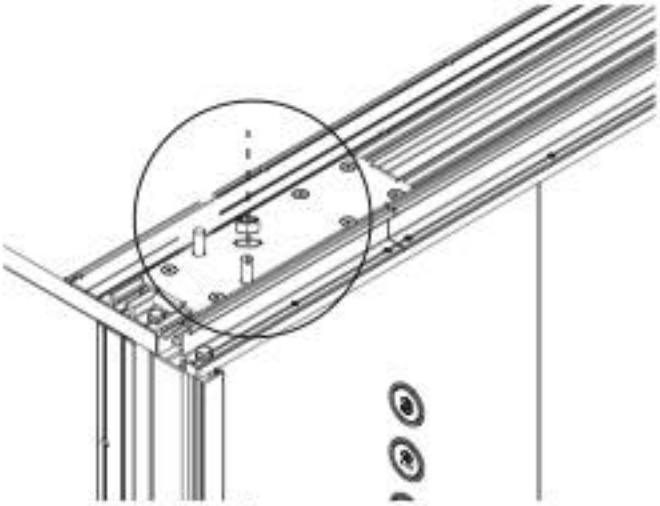

Remove ...

1 x $\frac{5}{16}$" hex nut	1 x lock washer

2 Detach the screw and lock washer from the gate switch.

Figure 137
Screw and lock washer on gate switch

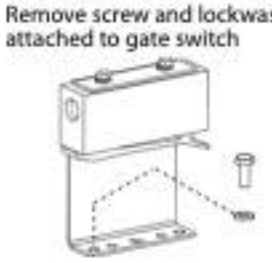

3 Detach the screw from the large track plate.

Figure 138
Large track plate

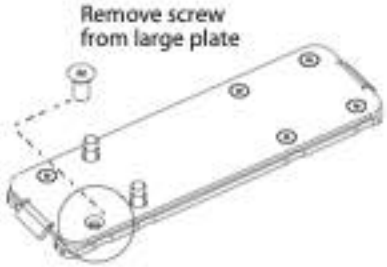

4 Assemble the gate switch to the track.

Figure 139
Gate switch attachment to track

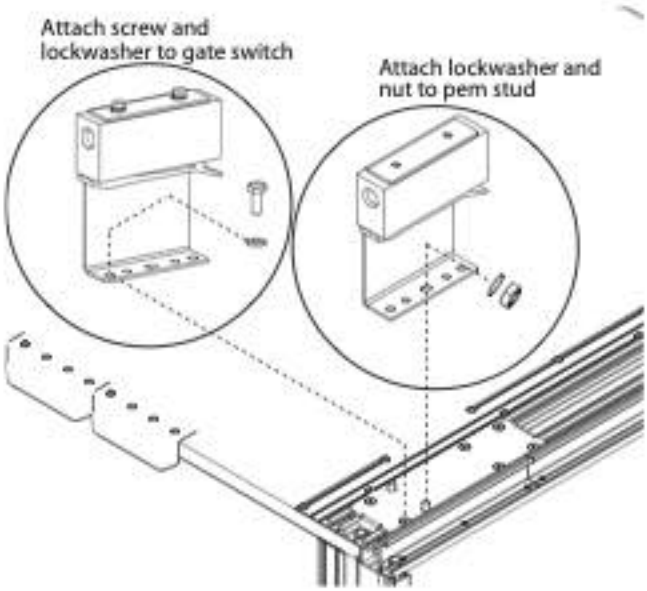

5 Adjust the stabilizer bar roller to ensure contact with the gate switch during door close.

NOTE

Be sure to set up the gate switch so contact is made within 1" of door closure.

Figure 140
Gate stabilizer at gate switch

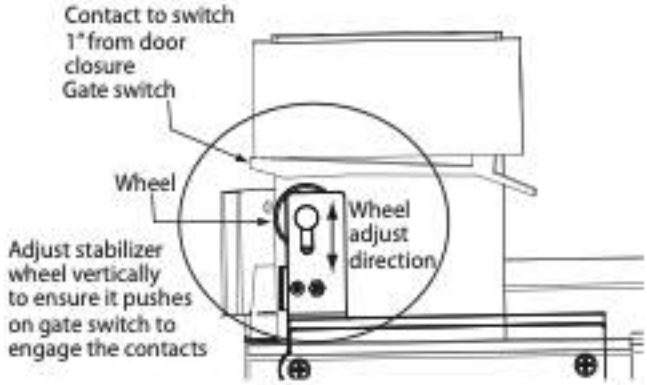

Figure 141
Stabilizer bar adjustment

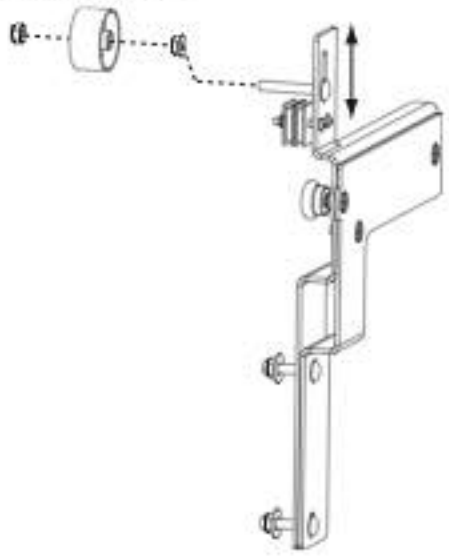

6 Connect manual gate harness part no. 772315 to car top board T18.1 (GS1A) and T18.2 (GS1B) for a front entrance, and to T19.1 (GS2A) and T19.2 (GS2B) for a rear/side entrance. NOTE: If only one manual gate is required, connect a wire jumper in the other connector.
See the Electrical Schematics for more information.

Step 33
Interlock installation

Refer to the appropriate *Residential Elevator Lock Installation Guide* for information on how to install a door interlock.

NOTE

Ensure the hoistway door meets the 3/4" & 4" rule as shown in the ASME A17.1 / CSA B44 Code, Section 5.3.1.8.3.
For more information, please consult the *Residential Elevator Lock Installation Guide (3/4&4 Rule), P/N 001286.*

Step 34
Power up and test elevator

Power up and test the elevator.

Procedure

Once all of the cabling has been completed, you are ready to power up and test the elevator.

⚠ WARNING

Make sure the building ground is connected to the controller ground bus before turning the disconnect on. Improper or no ground can result in shocking hazard and unsafe operation.

Calling the elevator to the floor

1 If the safety circuit is completed, the lift is enabled (key switch ON), and the lift is not in use (hall call light OFF), pressing a call button at any landing will register a call for the cab and the button light will come ON. At this point, other calls will be prevented (only one call is allowed). The lift will go to the floor from which the call was placed, door(s) will unlock, and the power gate/door will open (if equipped). The door will stay open for a pre-selected time before closing. If the door is held open, the gate will remain open and locks will not time-out.

2 Inside the cab, a call can be placed to any floor but the call will register only after the door has closed. Once the call is entered, TL and DOT will reset and the power gate (if equipped) will start closing.

3 When the gate(s) close, the door will lock and the lift will start moving to the selected floor. At this point, the call can be canceled with the car stop switch but **not** the car key switch. When the lift approaches the selected landing, fast speed will be turned OFF approximately 8" from the floor and the lift will continue on low speed until the leveling signal (LU or LD) is OFF. The lift will then stop, DOT will be activated, locks will open, and the power gate/door will open (if equipped). **(Note that in case of concurrent landing, both solenoids will be energized, but only the selected (front or rear) gate/door will open.)**

4 After the gate/door closes and locks, it can be re-opened by pressing the DOB button or call button corresponding to the current landing.

NOTE

This is not an exhaustive test and all limit switches, zone switches, etc. should be tested and their operation confirmed prior to handing over the elevator to the customer.

Step 35
Check working pressure and set over pressure relief valve

Check the working pressure and set the over pressure relief valve.

EPV models
The electronic proportional valve (EPV) is a variable-speed control valve that is provided in three models:

- EPV-4 is intended for oil flows up to 4 gallons per minute. The minimum down working pressure is 180 psi.
- EPV-7 is intended for oil flows in excess of 4 gallons per minute, up to a maximum of 7 gallons per minute. The minimum down working pressure is 300 psi.
- EPV-12 is intended for oil flows up to a maximum of 12 gallons per minute. The minimum down working pressure is 300 psi.

Setting the over pressure relief valve
The EPV is equipped with an adjustable relief valve that may be set, locked and sealed by an inspector. This is also a requirement of most enforcing authorities. Please test and set the relief valve, even in jurisdictions where an inspection is not required.

NOTE

There is a facility to install a seal (if equipped) by the inspector. The seal may be threaded through the holes in the domed cap and through the hole provided at one corner of the body of the relief valve.

To set the relief valve, place a full load on the car and run the elevator in the UP direction. Read the pressure gauge as the elevator ascends and mark down the pressure indicated. This is the **working pressure** of the elevator. The relief valve must be set to open at a pressure no greater than 125% of the working pressure. If the indicated pressure was 800 psi, then the maximum relief pressure permissible by code is 1000 psi (800 psi x 125% = 1000 psi).

⚠ CAUTION

DO NOT exceed a working pressure of 1600 psi.

1 Remove the dome cap from the pressure relief valve to expose the Allen head adjusting screw and lock nut.
2 Loosen the lock nut and place a 1/4" (6 mm) Allen wrench in the adjusting screw. Initially, turn the adjusting screw out at least two full turns.
3 Close the main shutoff valve with the rear handle.
4 Using the temporary run buttons, press the UP button and let the motor come up to speed. Continue to allow the motor to run as the adjustment is done. Observe the pressure reading on the gauge.
5 To increase the relief valve pressure, turn the screw in (clockwise). To reduce the relief valve pressure, turn the screw out (counter-clockwise). Turn the adjusting screw until the pressure gauge indicates about 1000 psi.
6 Release the button to stop the motor. Tighten the lock nut. The pressure relief valve is now set.
7 Install the domed cap.
8 Open the main shutoff valve.

Figure 142
EPV-4/EPV-7

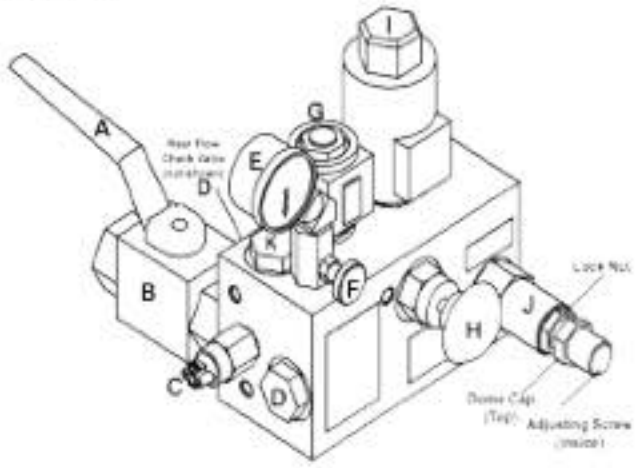

Figure 143
EPV-12

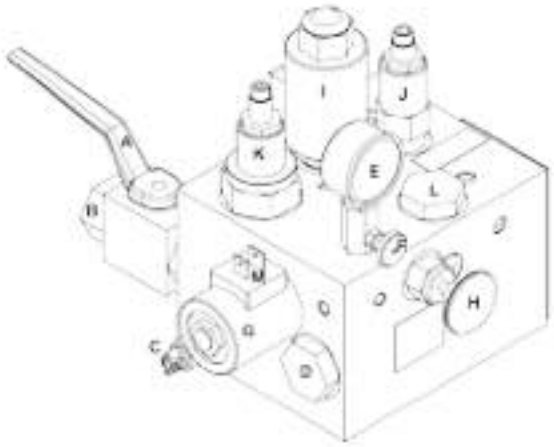

EPV-4/EPV-7	EPV-12
A – Main shutoff valve handle B – Main shutoff valve C – Low pressure switch D – Check valve E – Pressure gauge F – Pressure gauge shutoff valve G – Down solenoid H – Manual lowering release I – Proportional valve J – Pressure relief valve K – Slack rope valve	A – Main shutoff valve handle B – Main shutoff valve C – Low pressure switch D – Check valve E – Pressure gauge F – Pressure gauge shutoff valve G – Down solenoid H – Manual lowering release I – Proportional valve J – Pressure relief valve K – Adjustable slack rope valve L – Check valve M – Down solenoid electrical contacts

Pressure gauge
Each EPV is provided with a standard pressure gauge (Figure 150/151 E) and a pressure gauge isolating valve. Isolate the gauge from the pressure line by turning the gauge isolating valve to OFF, unless the elevator is being repaired or serviced.

To return the gauge to zero pressure before closing the isolating valve:

1 Rotate the main shutoff valve handle to the OFF position.
2 Open the manual lowering valve by pulling on the red manual lowering release knob on the front of the valve. The gauge will return to zero.
3 Turn the gauge isolating valve to the OFF position.
4 Return the main shutoff valve handle to the ON position (parallel with the oil line).

Slack rope monitor valve
Each EPV is provided with a standard monitor valve (Figure 150/151 K) to detect the occurrence of slack rope or loss of pressure in the hydraulic system. The device is non-adjustable and is **permanently mounted in the body of the valve**. If required, the EPV-4 and EPV-7 valve may be removed for servicing, but otherwise needs no attention. The EPV 12 valve is also factory preset but may require adjustment.

⚠ WARNING

Install the rail stops and set the safety brakes before making any adjustments underneath the cab while the elevator is in motion. Failing to do so may result in severe injury.

1 To test the valve, you must create a loss of pressure in the hydraulic system. This can be done by manually setting the safeties on the car, or supporting the car on the rail stops.
2 Pull on the manual lowering release knob (Figure 150/151 H) and observe the hydraulic plunger. There may be a slight movement of the plunger as the remaining pressure bleeds off. The plunger will remain in position while the manual lowering release is held open. Some slack cable may occur.
3 Raise the car with the temporary run buttons connected at the pump control and repeat.
4 Repeat the test using the temporary run buttons to energize the down solenoid. There may be a slight movement of the plunger as the remaining pressure bleeds off. The plunger will remain in position while the down solenoid is energized. Some slack cable may occur.
5 To reset the valve, simply raise the elevator from the safeties and allow pressure to return to the hydraulic system. The valve will automatically reset. Take care that any slack cable is carefully aligned with the sheave prior to raising the plunger and re-set the slack cable (plank) switch on the sling of the cab.

EPV-12 adjustment (slack rope monitor)
1 Loosen the lock nut on the adjustable slack rope valve (Figure 151 K).
2 Insert an Allen key in the adjusting screw and rotate it counter-clockwise until it stops.
3 Turn it clockwise by two turns.
4 Check the operation and adjust as required. Clockwise increases the pressure required to bring the cylinder down.

Low pressure switch
When activated due to loss of pressure, an electrical contact in the low pressure switch (also known as the negative pressure switch - Figure 150/151 C) on the left side of the valve will open the power supply to the down solenoid. This switch has been factory set, but adjustment on site is possible.

There is an adjustable screw on the end of the switch. Turning the screw clockwise will increase the pressure at which the contact opens. Turning the screw counter-clockwise will reduce the pressure at which the contact opens. Typically, the contact will open at about 75-100 psi.

1 To test the switch on site, place the leads of a meter directly on the down solenoid and across the two solenoid connections (Figure 150/151 E).
2 Set the meter on the low voltage, direct current setting. With the elevator operating in the DOWN direction, the meter should read approximately 24 Volts DC, because the solenoid is now energized.
3 Stop the elevator and close the handle of the main gate valve. Attempt to run the elevator in the DOWN direction by placing a down call.
4 If the main gate valve handle is in the open position, the pressure gauge will read zero. The test meter should read zero volts on the solenoid connections due to the contacts opening in the negative pressure switch. If there is power on the connections, adjust the switch as instructed.

Figure 144
EPV hydraulic schematic

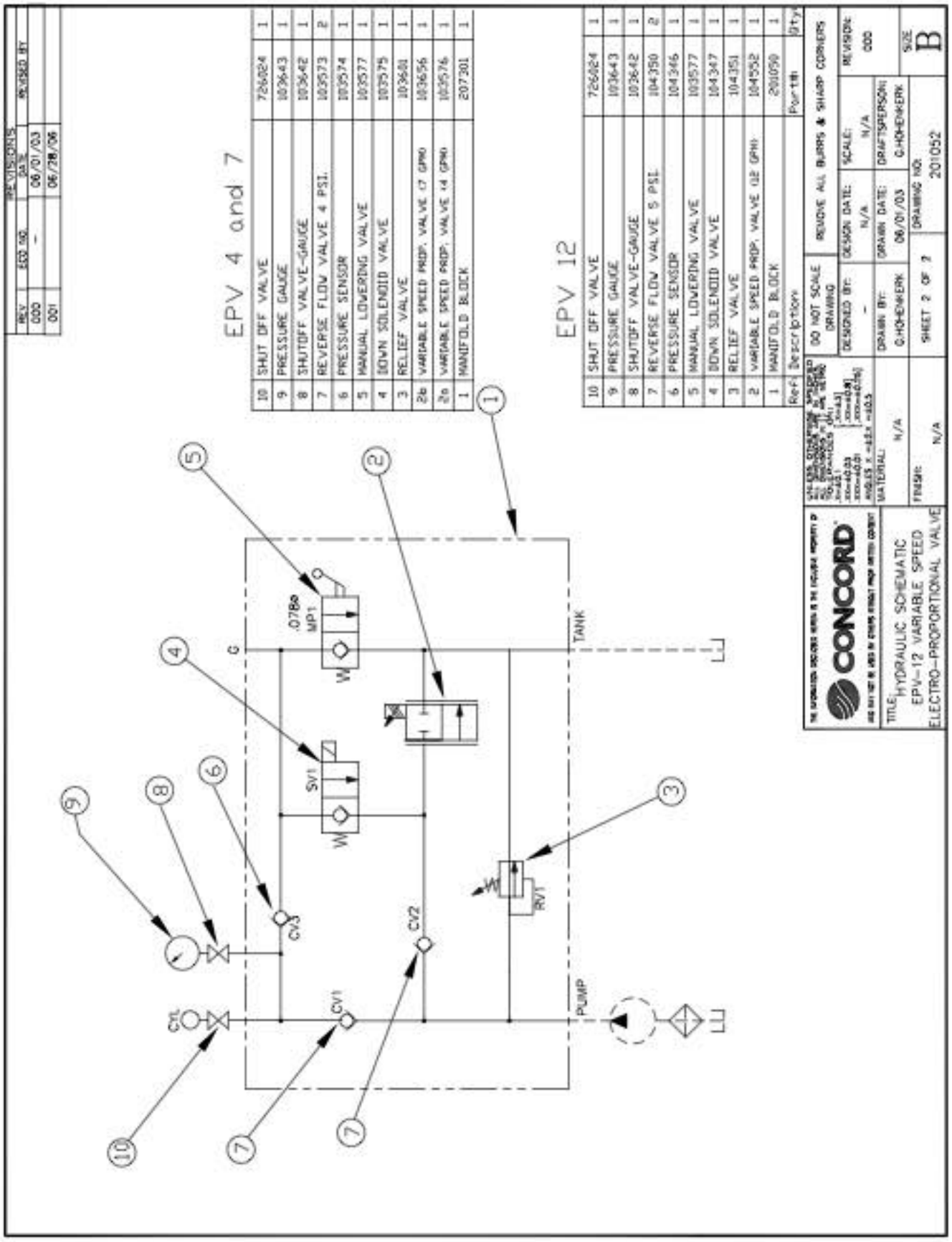

Step 36
Adjust valve speeds

Set the elevator speeds.

SPEED SETTING DESCRIPTIONS

The default speed settings are starting points only; adjustments may be required. Note that the value displayed for speed settings is a **percentage** of the speed. Note also, that the value displayed for acceleration, deceleration and change over delay is in **time** (1/10 sec).

EPV-4, F0=5 EPV-7, F0=5 EPV-11, F0=5

F0 represents adjustment of the start time delay.

The start time delay is the amount of time between motor start up and movement of the elevator. Adjust the number higher to increase the start time delay and lower to reduce the start time delay.

EPV-4, F1=20 EPV-7, F1=20 EPV-12, F1=40

F1 represents UP Acceleration.

Setting to a lower number shortens or makes the acceleration harsher. Setting to a higher number lengthens or softens the acceleration. The value is in 1/10 sec.

EPV-4, F2=20 EPV-7, F2=20 EPV-12, F2=5

F2 represents UP Deceleration.

Setting to a lower number shortens or makes the deceleration harsher. Setting to a higher number lengthens or softens the deceleration. The value is in 1/10 sec.

EPV-4, F3=65 EPV-7, F3=57 EPV-12, F3=80

F3 represents UP Low Speed (releveling).

Setting to a higher number increases the releveling speed. Setting to a lower number decreases the releveling speed.

EPV-4, F4=85 EPV-7, F4=99 EPV-12, F4=97

F4 represents UP High Speed (normal).

Setting to a higher number increases the full speed of the elevator. Setting to a lower number decreases the full speed of the elevator.

EPV-4, F5=20 EPV-7, F5=20 EPV-12, F5=30

F5 represents DOWN Acceleration.

Setting to a lower number shortens or makes the acceleration harsher. Setting to a higher number lengthens or softens the acceleration. The value is in 1/10 sec.

EPV-4, F6=20 EPV-7, F6=20 EPV-12, F6=5

F6 represents DOWN Deceleration.

Setting to a lower number shortens or makes the deceleration harsher. Setting to a higher number lengthens or softens the deceleration. The value is in 1/10 sec.

EPV-4, F7=20 EPV-7, F7=18 EPV-12, F7=9

F7 represents DOWN Low Speed (releveling).

Setting to a higher number increases the releveling speed. Setting to a lower number decreases the releveling speed.

EPV-4, F8=40 EPV-7, F8=53 EPV-12, F8=23

F8 represents DOWN High Speed (normal).

Setting to a higher number increases the full speed of the elevator. Setting to a lower number decreases the full speed of the elevator.

EPV-4, F9=65 EPV-7, F9=57 EPV-12, F9=80

F9 represents UP After High Speed (leveling).

Setting to a higher number increases the leveling speed. Setting to a lower number decreases the leveling speed.

EPV-4, Fa=20 EPV-7, Fa=18 EPV-12, Fa=9

Fa represents DOWN After High Speed (leveling).

Setting to a higher number increases the leveling speed. Setting to a lower number decreases the leveling speed.

EPV-4, Fb=10 EPV-7, Fb=10 EPV-12, Fb=10

Fb represents Restart (Change Over) Delay.

Setting to a higher number lengthens the time before a request to run in the opposite direction will be executed.

Setting to a lower number shortens the time before a request to run in the opposite direction will be executed.

EPV-4, Fc=1 EPV-7, Fc=2 EPV-12, Fc=3

Fc represents Valve Model Select.

1 = EPV-4 valve presets

2 = EPV-7 valve presets

3 = EPV-12 valve presets

Changing Fc will load the default values listed on this page for the respective valve model.

SEQUENCE OF OPERATION OF THE EPV

The following functions (F#) are used to set the various speeds of the elevator.

NOTE: Refer to the illustration on page 93 for directional speed curves.

UP direction	**Function**
Motor Start Delay	(F0 Function)
UP Acceleration	(F1 Function)
UP High Speed (normal)	(F4 Function)
UP Deceleration	(F2 Function)
UP After High Speed (leveling)	(F9 Function)
UP Deceleration	(F2 Function)

DOWN direction	**Function**
DOWN Acceleration	(F5 Function)
DOWN High Speed (normal)	(F8 Function)
DOWN Deceleration	(F6 Function)
DOWN After High Speed (leveling)	(Fa Function)
DOWN Deceleration	(F6 Function)

1 The EPV solenoid is fully closed when a button is pressed to call or send the elevator in the UP direction. Power is applied to the valve controller.

2 On power-up, the solenoid fully opens for a short period (about 1 second) when all of the oil sent from the pump returns to the oil reservoir. This permits the motor to start up under very little load.

3 The motor start time is adjusted using the **F0-Motor Start Delay** setting which is displayed on the valve controller. The PLC continues to send signals to the EPV solenoid as per the F0 setting.

4 When the timing of the F0 setting has passed, the display changes to **F1-UP Acceleration** and the elevator accelerates smoothly.

5 The valve controller display then changes from F1 to **F4-UP High Speed**.

6 When the elevator reaches its selected floor, the magnetic switch at that floor will send a signal to the controller that the elevator is at the correct floor. The PLC starts the deceleration phase to the floor level.

7 The display will indicate a change from F4 to **F2-UP Deceleration**, and the elevator will immediately start to slow down as the solenoid responds to the new signal. The slow down distance from full speed to leveling speed is approximately 5" to 5 ½" (127 mm - 140 mm). (The distance depends on magnet length and both vary depending on speed).

8 As the elevator approaches within a few inches of the floor, the display will change from F2 to **F9-UP After High Speed** (leveling).

9 The elevator will slow to the preset leveling speed and will continue ascending until the magnetic switch signals the next stop.

10 The process for the DOWN direction operation is identical to the UP direction, except the EPV starts closed and opens to increase the DOWN speed. The function numbers are also different: F5 is DOWN Acceleration, F6 is DOWN Deceleration function, Fa is DOWN After High Speed (leveling), and F8 is DOWN High Speed.

DETERMINING SPEEDS

Use a tachometer to set the speed settings of the elevator. Refer to the default speed settings and your **Installation Drawings** for the rated speed of the elevator. *Note the default speed settings are not absolute and may have to be adjusted to suit the application.*

NOTE: Refer to the illustration on page 93 for directional speed curves.

The temporary run buttons must be set up and wired as instructed in this guide.

1 Press the UP button to allow the elevator to ascend at leveling speed. By holding the UP button and pressing the High Speed button, the elevator will accelerate to full speed. Note the rate of acceleration. The same procedure is required for the DOWN direction settings.

2 If a tachometer is not available to set the speeds, use a stopwatch and time the elevator to set the speeds. A simple method to set the leveling speed is to use a standard landing doorway height. This height is usually 80" or 84" (2032 mm or 2134 mm).

3 For the DOWN direction, set the elevator car with the platform opposite to the top of the door panel. This means the platform is now about 80"- 84" higher than the landing sill. Use the stopwatch (or the second hand of a watch) and start the elevator down in slow or leveling speed. Time how long it takes to reach the bottom of the door or the landing level. It should take about 1 minute and the leveling speed will be approximately 7 ft/min.

4 If the speed is faster than 7 ft/min, the time will be shorter than 1 minute; decrease the F7 and Fa settings. (The lower the number is set, the slower the leveling speed.)

5 If the timing is longer than 1 minute, then to speed up the elevator, increase the F7 and Fa settings. Note that the time of 1 minute is only approximate, not absolute. The objective is to adjust the leveling speed to be approximately 7 or 8 ft/min.

6 Repeat the process for the UP direction leveling speed using F3 and F9. Start at the landing level and time how long the elevator takes to reach the top of the door panel.

When setting the high speed without the use of a tachometer, use the following procedure:

1 Time the UP High Speed by setting F4 to the highest number, 97.

2 Time how long it takes for the elevator to travel the full distance from level at the bottom landing to level at the top landing. Note this time.

3 Time how long it takes for the elevator to travel from level at the top landing to level at the bottom landing. The time should be approximately the same.

4 If the DOWN travel time is significantly longer than the UP travel time, then the elevator is traveling slower. To increase the speed in the DOWN direction, increase the F8 DOWN High Speed setting.

NOTE

Before making any adjustments to the EPV, fully open the flow control (shown below) on the jack assembly. On completion, turn to close the flow control until the speed is affected, back off a half turn away from that point and then lock.

Figure 145
Flow control

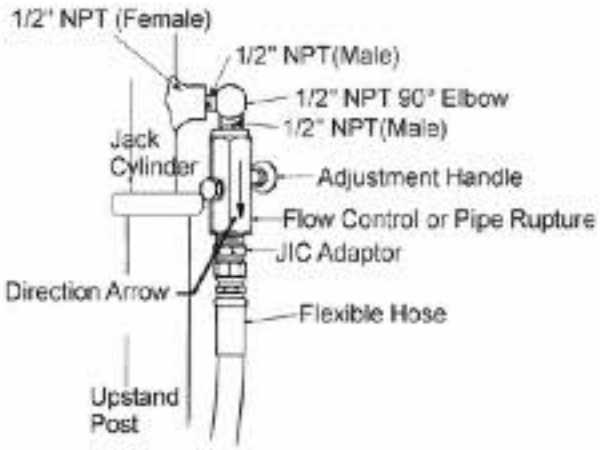

Arrow must point toward the pump unit.

Figure 146
Directional speed curves

VALVE CONTROLLER ADJUSTMENT INSTRUCTIONS

Method 1 - Standard LCD Screen

The standard LCD screen is shown below.

Figure 147
Valve controller standard LCD screen



1 Navigate up or down the parameter menu screens via the ↑ and ↓ arrows, until the desired parameter is present.

2 Press and hold "»" and "OK" for 2 seconds. The cursor will begin to blink at the "&" position.

Figure 148
Press and hold OK



3 Navigate across the "digits" using the "»" arrow, altering the values up or down via the ↑ and ↓ arrows on the digit where the cursor is blinking.

4 When the desired value is achieved, press the "OK" button. The cursor will return to the "&" position.

5 Press the "ESC" button to exit edit mode.

Figure 149
Press ESC



6 If you would like to alter another parameter, use the ↑ and ↓ arrows to move to the next desired screen and repeat steps 2 through 5.

7 When finished, return the display to the HOME screen via the ↑ and ↓ arrows.

An illustration of the screens is provided on the next page for reference. The sequence begins at the Home Screen, cycles through F0 to Fc, and then returns to Home.

NOTE

For Fc - Valve Model Select, the allowed values are:
&00001 = EPV-4 valve typical settings
&00002 = EPV-7 valve typical settings
&00003 = EPV-12 valve typical settings
Upon altering the Valve Model Select parameter, parameters F0 though Fb will be overwritten with the typical values. The parameters can then be fine-tuned.

NOTE

To utilize the standard LCD display, the OMRON PLC must have DIP switch #4 set to ON (Port = Auto). The location of the DIP switch is inside the door labeled PERIPHERAL.

⚠ WARNING

NEVER REMOVE OR INSTALL A DISPLAY WHILE THE PLC IS POWERED AS THIS WILL DAMAGE THE PLC.

Figure 150
Screens



Home Screen



F0 - Motor Start Delay



F1 - UP Acceleration



F2 - UP Deceleration



F3 - UP Low Speed



F4 - UP High Speed



F5 - DN Acceleration



F6 - DN Deceleration



F7 - DN Low Speed



F8 - DN High Speed



F9 - UP After High Speed



Fa - DN After High Speed



Fb - Restart Delay



Fc - Valve Model Select



Return to Home Screen

Method 2 - Optional 3" Colour Touch Screen

The optional 3" colour touch screen (P/N 641309) is shown below.

Figure 151
Valve controller optional 3" colour touch screen



1 On the **Home** screen, parameters F0 through F8 can be accessed directly. To alter a value, touch the value box and enter a new value in the pop-up window that opens. Touch "ENTER" to accept the new value.

Figure 152
Home screen



2 Various subsequent screens can be accessed by touching the buttons across the bottom of the screen. To access the remainder of the valve parameters, touch **Extra**. On the **Extra** screen, you can pre-load typical parameter settings by valve type by touching the EPV-4, EPV-7 or EPV-12 buttons.

Figure 153
Extra screen

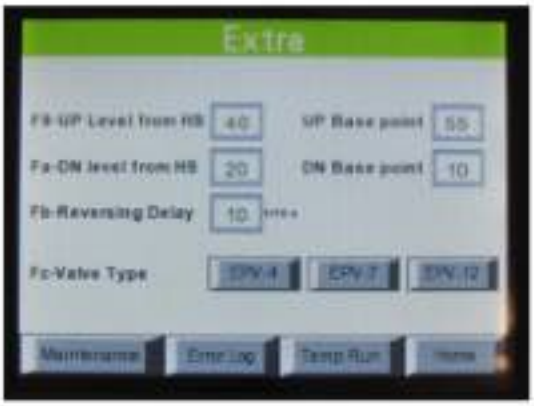

3 The **Maintenance** screen provides access to counters within the valve controller. On the left, there is a running count of the # of trips and re-levels since it was last reset. There is also a display in hours and minutes that the valve controller has spent moving the elevator. On the right, there is a count of the trips and re-levels which have been logged during the life of the valve controller. The interval counters (on the left side) can be reset by touching the reset buttons.

Figure 154
Maintenance screen



4 The **Error Log** screen provides a record of the last four errors that the valve controller has detected, including the date and time that the errors occurred. This log can be reset at any time by touching the Reset Log button.

- **NOTE:** If the error which occurs is a fault detected with the timer, the valve operator will be shut down until the error is corrected and reset. To complete this, you must touch the Reset Alarm button once the timer has either been adjusted correctly or completely replaced.

Figure 155
Error log screen

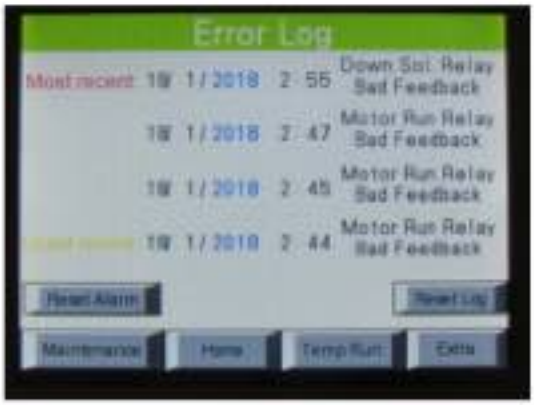

5 The **Temp Run** screen provides an additional way to move the lift during installation. First you must touch the Enable button, and then on the subsequent screen you may touch (and hold) the direction and speed you want. As soon as the button is released, you will be returned to the **Enable** screen. This is to ensure there are no erroneous activations of the temp run function.

Figure 156
Temp run screens



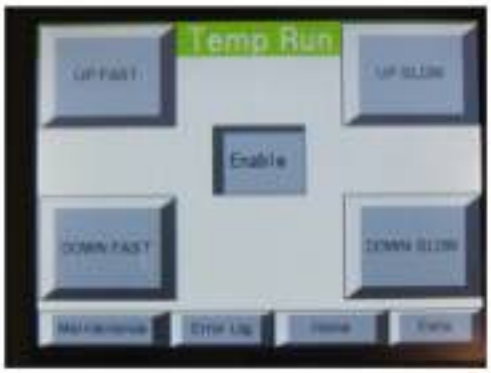

6 On the **Maintenance** screen, there is a small button on the top left labeled Dealer. This button causes a **USER LEVEL LOGIN** screen to appear. You must enter "Maint" as the User Name, and "134679" as the Access Password in order to reach the **Dealer** screen.

Figure 157
User level login screen



7 On this expanded **Dealer** screen, a dealer can set a Maintenance Max Count. When the Max Count is exceeded, the valve controller will no longer respond to requests to move. To negate this feature, the Max Count should be set to 0. The Maintenance Count can be reset by touching the Reset Count button.

Figure 158
Dealer screen



NOTE

To utilize the optional 3" colour touch screen, the OMRON PLC must have DIP switch #4 set to OFF (Port = Setup). The location of this DIP switch is inside the door labeled PERIPHERAL. Also, the small standard LCD screen is removed and replaced with the OMRON communication interface.

⚠ WARNING

NEVER REMOVE OR INSTALL A DISPLAY WHILE THE PLC IS POWERED AS THIS WILL DAMAGE THE PLC.

EPV ERROR MESSAGES

Error	Definition
ERROR MC RELAY WELDED MUST REPLACE	Relay K2 (motor contactor) has welded closed. The lift will not run until the relay has been replaced.
ERROR DS RELAY WELDED MUST REPLACE	Relay K1 (down solenoid) has welded closed. The lift will not run until the relay has been replaced.
ERROR UP AND DOWN SAME TIME REFER SCHEMA	Signals for both UP and DOWN are being received at the same time. Check to see if the controller is doing it or if a wiring error is present.
ERROR TOF ADJUST 1S OR REPLACE	The Timer setting is not 0.7s. Check that the mode is set to "D", the range is set to "SEC" and the time dial is set to "0.7s". If the failure persists, replace the timer.
ERROR PROPORTIONAL NOT CONNECT REFER SCHEMA	The valve is not connected. Check all connections between the proportional valve and the valve controller (including through the main controller board).

To reset the error (standard LCD screen):

1 Press ESC and OK simultaneously.
2 Scroll down to IO MEMORY and press OK.
3 Scroll down to HR and press OK.
4 Press OK with the screen showing H000 # W.
5 Press the right arrow button to the error number (i.e. #0001 or #0008 etc.) At the prompt #00??, ensure the value there is #0000, and then press OK. The error is now cleared. Press ESC until you reach the Home Screen.

- ***NOTE:*** *If you have the optional 3" colour touch screen, you can reset the error at the Error Log screen by touching the Reset Alarm button.*

EPV MAINTENANCE

If DOWN leakage occurs, clean or replace the valve components as follows:

1 Down solenoid valve (G)
2 Manual lowering valve (H)
3 Reverse flow check valve (D) x 2
4 If the DOWN speed is slow, there may be debris in the screen underneath the down solenoid valve (G). Remove the valve and clean the screen.

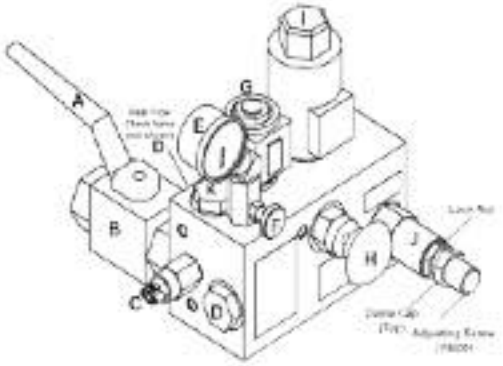

Step 37
Elevator troubleshooting

This section provides information on elevator troubleshooting.

Condition	Probable cause(s)
Car controls are inoperable but landing controls work	1 Defective key switch/key switch not turned ON in cab 2 Defective push button
Landing controls are inoperable but car controls work	1 Key switch at landing turned OFF 2 NIT timer has not timed out 3 Loose wire connections to push button 4 Incorrect wire connections to push button 5 Defective push button 6 Cut or damaged traveling cable
Elevator does not operate in the UP direction and pump does not run	1 Blown fuse in controller 2 Circuit breaker tripped, cutting power to disconnect 3 Car stop button pressed/stuck in (if equipped) 4 Final limit switch engaged (if equipped) 5 Normal limit UP switch activated or faulty loose wiring 6 Pit switch not turned ON (if equipped) 7 Traveling cable cut or broken 8 Faulty plank switch 9 UTT may be tripped
Elevator travels in UP direction very slowly	1 Valve operator board not adjusted properly 2 Relief pressure not properly set 3 High speed not activated to proportional valve 4 Valve microprocessor faulty 5 Proportional valve faulty
Pump runs but elevator does not move UP	1 Gate valve closed 2 Low oil level 3 Valve operator board not adjusted properly 4 Relief valve set too low or faulty
Elevator travels in DOWN direction very slowly	1 Valve operator board not adjusted properly 2 Elevator binding on rails / improper lubrication 3 Rails not plumb 4 Gate valve partially closed 5 Jack is binding 6 Proportional valve faulty 7 Valve microprocessor faulty 8 Flow control (if equipped) faulty or not set
Fuses at disconnect blown	1 Incorrect size (amperage) fuse 2 Loose wiring on main power contactors 3 Incorrect wire gauge from disconnect to unit 4 Direct short circuit on main power side
Emergency power lighting does not activate	1 Bulbs blown 2 Fuse blown on charger board 3 Batteries not plugged in/charged
Emergency light remains on	1 No 110V power to controller
Elevator will not travel in DOWN direction	1 Platform on safeties/slack rope 2 Normal limit down switch activated or faulty/loose wire connections 3 Defective push button 4 Loose wire connections on push button/controller 5 Gate valve closed 6 Flow control (if equipped) adjustment not set properly 7 Faulty valve microprocessor 8 Faulty proportional valve 9 Valve operator board adjustments not set properly
Elevator runs with a door open	1 Incorrect lock wiring 2 Lock circuitry may have been jumped out
Elevator creeps in DOWN direction (drifts down)	1 Manual lowering valve partially open 2 Oil contaminants in down hydraulic circuit 3 Oil leak
Elevator will not re-level	1 Door zone switch not activating/ loose wire connections 2 Improper setting of magnets
Excessive machine vibrations	1 Lack of lubrication on rails 2 Guide shoes too tight on rails 3 Cylinder packing dry or too tight 4 Rail bracket mounting bolts loose 5 Pump unit mounting bolts loose or faulty pump unit 6 Jack binding/out of plumb 7 Hydraulic pipe not securely fastened 8 Tank not secured to floor

Step 38
Test operation

Test the operation of the elevator.

The following features must be verified as operational **BEFORE** the elevator can be released to the customer.

⚠ WARNING

To avoid personal injury, never stand directly under the cab or inside the hoistway during testing.

1 **Cab Key Switch**
Verify that when the key is in the OFF position, the buttons on the cab station are inoperable.

2 **Call Controls**
Verify that the controls are inoperable whenever a landing door or the cab gate is left in the open position, or when the key switch is in the OFF position.

3 **Emergency Car Stop Button**
Verify that turning the stop key to the STOP position stops the elevator from running and stops the doors from moving.

4 **Door Interlock**

a. **Door Switch:** Verify that when the door is left open, the car will not run in any direction from any station. Check all controls at all stations.

b. **Lock:** Verify that the door is locked after 2" of movement away from the landing. If necessary, adjust the cam accordingly.

c. **Cab Gate (Optional)**: Verify that all controls are inoperable if the gate is left in the open position.

5 **Pit Switch and Car Top Stop Switch**
Verify that turning either switch to the OFF position renders all controls inoperable.

6 **Emergency Light**
Verify that the emergency light comes on any time that the 110-volt power to the equipment is interrupted.

7 **Emergency Lowering**
Verify that when the power to the elevator (both 110 volt and 220 volts) is disconnected, the DOWN button controls in the cab remain operable allowing the cab to operate in the DOWN direction only.

8 **Cab Telephone (Option)**
Verify that the cab telephone is operable.

9 **Traveling Cable**
Make sure that the traveling cable is running free and clear of all obstructions while the cab travels to all floors being served.

Step 39
Verify automatic cab lighting

Verify the automatic cab lighting function.

1 **Calling the Elevator from Landing Controls**
Upon pressing the call button, the car lights automatically come on. The elevator starts to move. The car will arrive at the landing with the car lights on.

2 **Entering the Elevator**
If the elevator is at the same landing as the caller, then opening the landing door or car gate to enter the elevator will cause the elevator interior lights to turn on automatically.

3 **Power Failure**
If there is a power failure in the main power supply to the motor control (not the lighting supply), then the lights will also turn on as a safety feature.

Step 40
Program COP position indicator (if required)

Program the car operating panel position indicator as necessary.

The LCD position indicator (PI) is programmable using the on-board DIP switches and push buttons (shown below).

Figure 159
COP position indicator



Figure 160
COP position indicator board

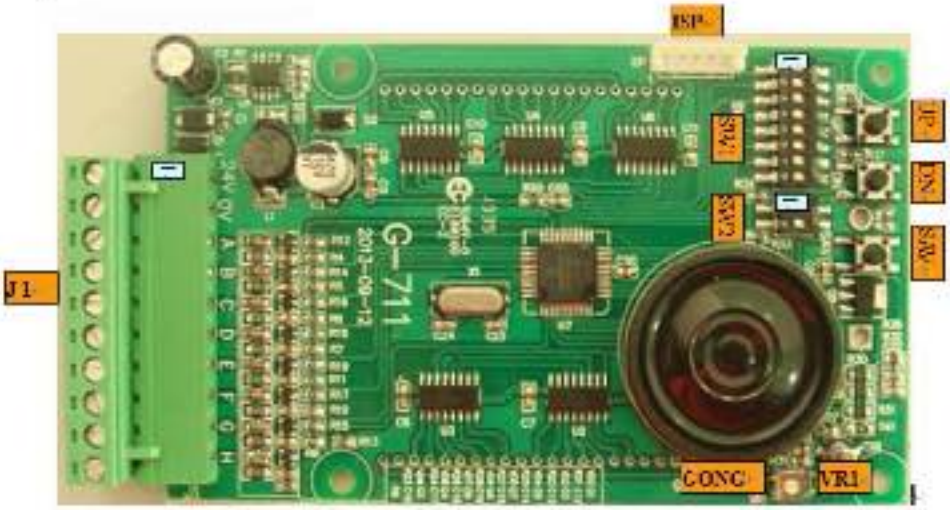

SW2 settings

1	2	Function
OFF	X	Operating mode or setting mode
ON	OFF	Self-testing 1
ON	ON	Self-testing 2
X	ON	Logo **Savaria** displaying in operating mode

Self-testing 1

1 Floor information, icon, arrow, and arrival gong testing
2 8 inputs and display

Input	A	B	C	D	E	F	G	H
Display	D1	D2	D3	D4	D5	D6	D7	D8

3 DIP switches SW1 and SW2, and display

Switch Position	SW1.1	SW1.2	SW1.3	SW1.4	SW1.5	SW1.6	SW1.7	SW1.8	SW2.1	SW2.2
Display	S1	S2	S3	S4	S5	S6	S7	S8	S9	SA

Self-testing 2

1 Scan each segment and icon of LCD
2 Scan floor information and character

NOTE: Settings will be effective after restarting power-on.

SW1: 8-position DIP switch settings

Use DIP switch SW1.1 through SW1.4 to program the floor (see table on next page)

Push-button switches for setting up and saving display information

1 **UP**: Press to scroll upwards through the characters
2 **DN**: Press to scroll downwards through the characters
3 **SAV**: Press to step from 10's, to 1's, to timing during floor programming procedure

Volume adjustment of arrival gong via VR1

- Increase volume by turning VR1 clockwise; decrease volume by turning VR1 counter-clockwise
- Single gong for UP direction; double gong for DOWN direction
- The default volume of arrival gong is set to 60 dB

LCD icons

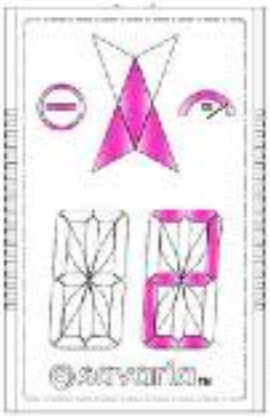

- **Call for service**: Symbol is displayed when elevator requires maintenance. Normally, symbol is not displayed.
- **Full on/Full off**: Symbol is displayed when elevator overloads. Normally, symbol is not displayed.
- **Savaria logo**: Normally, the logo is displayed.

Floor programming procedure

1 Set DIP switch SW1, positions 1 through 4 to select the floor to program (see the table below).



Note:
DIP Switch 5 to 8 not used

All switches are normally in OFF position

Floor being programmed	DIP Switches (1, 2, 3...)	Selector Signals
1	1	P1
2	2	P2
3	1, 2	P1, P2
4	3	P3
5	1, 3	P1, P3
6	2, 3	P2, P3

Note:
The DIP Switches that are turned on mimic the selector lights that are on for that given floor.

Please ensure you are getting the correct selector lights for each floor or else your COP will not program correctly and will show the wrong letter/number.

Check both controller and Car Top Board (if applicable).

2 Press and hold SAV for 3 seconds until the character in the LCD display is blinking. The 1's digit should be blinking. NOTE: The 10's digit display should be set to "Blank" for single digit use.

3 Press UP or DN to scroll upwards or downwards through the numbers/letters.

4 When the desired number or letter is selected, press SAV once. The 10's digit should now be blinking.

5 Press UP or DN to scroll upwards or downwards through the letters/numbers. When the desired number or letter is selected, press SAV once. You will now see T2 or T#.

6 Press SAV once again, your floor display that you programmed will now be blinking. Press and hold SAV button for 5 – 10 seconds. Your display should stop blinking.

7 The floor setting is programmed.

8 Turn off the DIP switches SW1 turned on in step 1.

9 Repeat the above steps 1 through 7 for each floor to be modified.

NOTE

Programming has a timer lockout. If timer expires mid-programming, user will be booted back to the start. It is advised to program each floor one at a time, and ensuring it is saved before programming the next floor.

To set Time Delay:

1 Set the time delay (default is T2: 100ms):

a. Press and hold SAV for 3 seconds until the character in the LCD display is blinking.

b. Press SAV until 'T' is displayed in the 10's digit display.

c. Use the UP/DN buttons to set the time delay value in the 1's digit display, T0 through TF per the table below

Setting	Time Delay (ms)
T0	0
T1	50
T2	100
T3	150
T4	175
T5	200
T6	225
T7	250
T8	275
T9	300
TA	325
TB	350
TC	500
TD	600
TE	800
TF	1000

Step 41

Program hall call position indicator (if required)

Program the hall call position indicator as necessary.

The position indicator (PI) display for the landing station (hall call) is an optional feature.



PI wiring

For a landing station with PI indicator display, there is a 5 conductor wire (in addition to the 12 conductor wire) to run from the machine room to each landing station.

To save wire, run the wire from the machine room to floor 1, and then extend the wires from floor 1 to 2, then 2 to 3, and so on.

Wiring for the landing station with PI indicator is shown below.

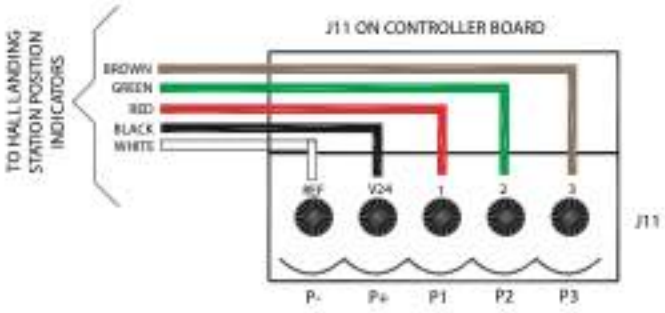

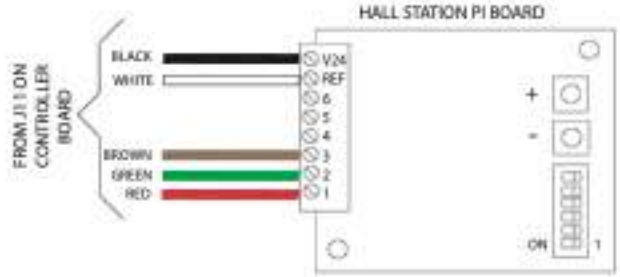

PI programming

You can program the hall position indicator (PI) to change the display output using the on-board DIP switch and +/- pushbuttons (shown below).

HALL STATION PI BOARD

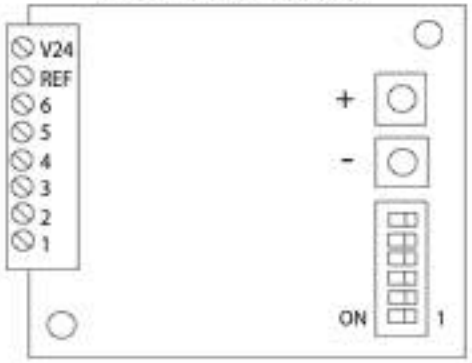

To program the hall position indicator, follow these steps.

1 With power applied, the dot-matrix LED display on the hall position indicator will light up.
2 Turn DIP switches 5 and 6 ON, and then press the (+) or (-) pushbutton until **b** is displayed.
3 Turn DIP switch 5 OFF and leave 6 ON on until all floors have been programmed.
4 Choose the floor to be programmed by setting the DIP switch to the binary code of the floor number. Refer to the table below.

Position Indicator DIP Switch Settings

Floor	DIP Switch			
	4	3	2	1
1	OFF	OFF	OFF	ON
2	OFF	OFF	ON	OFF
3	OFF	OFF	ON	ON
4	OFF	ON	OFF	OFF
5	OFF	ON	OFF	ON
6	OFF	ON	ON	OFF

5 Press the (+) or (-) pushbutton until the desired number or character (0 to 9, A to Z) is displayed.
6 When you get the desired display, turn the DIP switch OFF to save the display to memory.
7 Repeat steps 4 to 6 until all floors are programmed.
8 Turn DIP switch 6 OFF.
9 When the PI display stops flashing, the unit is ready to run.

Step 42
Before leaving job site

Before leaving the job site, make sure the work area is clean and the elevator is safe and operational.

Procedure

1 Clean up the work area.
2 Make sure all hardware has been tightened.
3 Make sure all controls operate properly.
4 Make sure any excess aircraft cable has been cut from the clamp end.
5 Ensure the slack rope safeties are tested and functioning properly (refer to the procedure on the next page).
6 Explain the operation of the elevator to the customer.
7 Assist the customer on an orientation ride. During this orientation, stress the importance of proper operation and regular maintenance.
8 Provide a copy of the Owner's Manual and Warranty to the customer. Be sure to record all required details per the Owner's Manual.

Infinity Safety Testing

The safeties provided on our 1:2 roped hydraulic units are designed in accordance with CSA Standards. The safeties are operated by the overspeed governor (if equipped) and/or the action of a slack suspension rope device.

NOTE: The purpose of the illustration below is to show the safety testing method. This does not represent any specific product and does not illustrate the actual rated load for the Infinity.

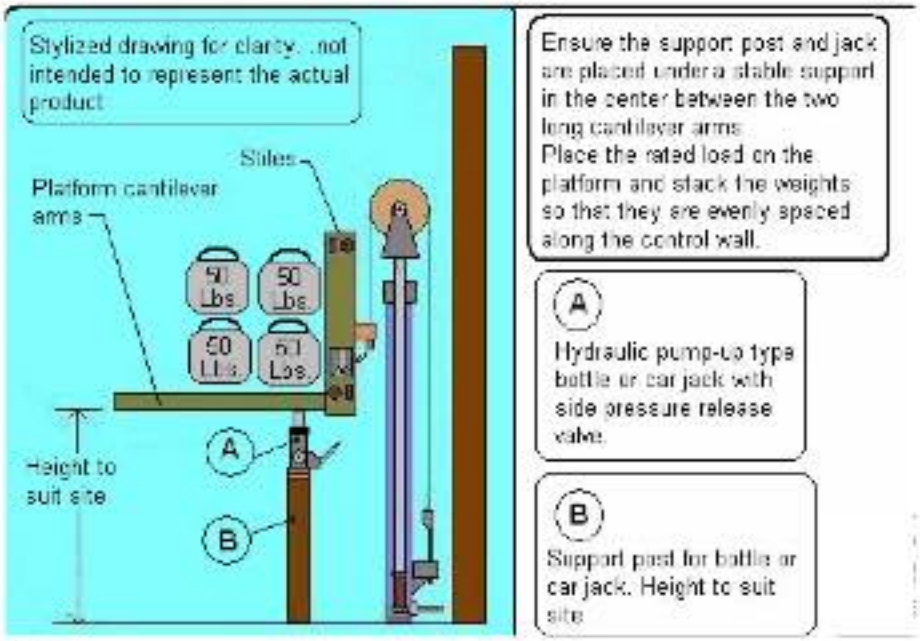

Hydraulic Flow Control

If required, a permanent flow control valve is attached directly to the cylinder. If the hose should be damaged so that uncontrolled oil pressure is released from the system this valve will limit the speed of the unit in the down direction to 125% of the rated speed.

These safety provisions are sufficient to insure a safe installation.

Safety Test Procedure

Perform the safety test BEFORE building the cab so you can see/access safeties if adjustment is needed.

1. Place the rated load on the platform.
2. Run the lift up at least 2 feet higher than the shoring blocks or pit prop location.
3. Remove power from the unit.
4. Press the pit stop button, and then enter the pit and install the shoring blocks or pit prop.
5. Use the manual lowering in the tank to slowly lower the unit down onto a bottle jack and support post that is positioned approximately 6 to 8" higher than the shoring blocks or pit prop height.
6. With the lift on the bottle jack and the manual-lowering valve fully open, apply enough pressure down on the cables to gain about 6" of slack rope.
7. Carefully check that the safeties have engaged the rails properly and evenly.
8. Step clear of the pit!
9. Mark the level of the cab on the door frame/rails.
10. Using a long pipe, release the bottle jack from outside the hoistway.
11. The lift will remain on the safeties, and the ropes will be slack proving that the safeties are supporting the gross load.
12. Mark the location of the lift on the door frame/rails and record the distance from the original mark.
13. Restore power to the unit.
14. Push in both motor contacts to run the lift up at least 3 feet to reset the safeties, as well as to allow access to the safety marks on the rails. **CAUTION:** Make sure slack cables don't get caught on anything and return to their proper position.Ensure that the marks are fairly even in height and application.
15. Ensure that the marks are fairly even in height and application.
16. File the marks on the rails and reset the safety plank switch.
17. Verify that the cables and cable fastening have returned to their proper location.
18. Remove the pit prop or shoring blocks and exit the pit.
19. Reset the pit stop switch.

Appendix A
Electrical Schematics

The Micro-6 Electrical Schematics are shipped in a separate package.

Appendix B
Cab Information

NOTE

You MUST install the light screens on the cab walls BEFORE building the cab. Refer to STEP 22 earlier in this manual.

Cab types and gate handing

The illustration on the next page shows the cab types and gate handing.

Order of installation of cab parts

The illustrations on the subsequent pages show the order of installation of parts for each cab type for Infinity and Infinity HD.

NOTE

The numbers in the following cab assembly illustrations represent the sequence of assembly. For example, install the floor first, followed by the COP wall and so on.

Cab types differences

This section describes the differences between the cab types.

Cab types and gate handing

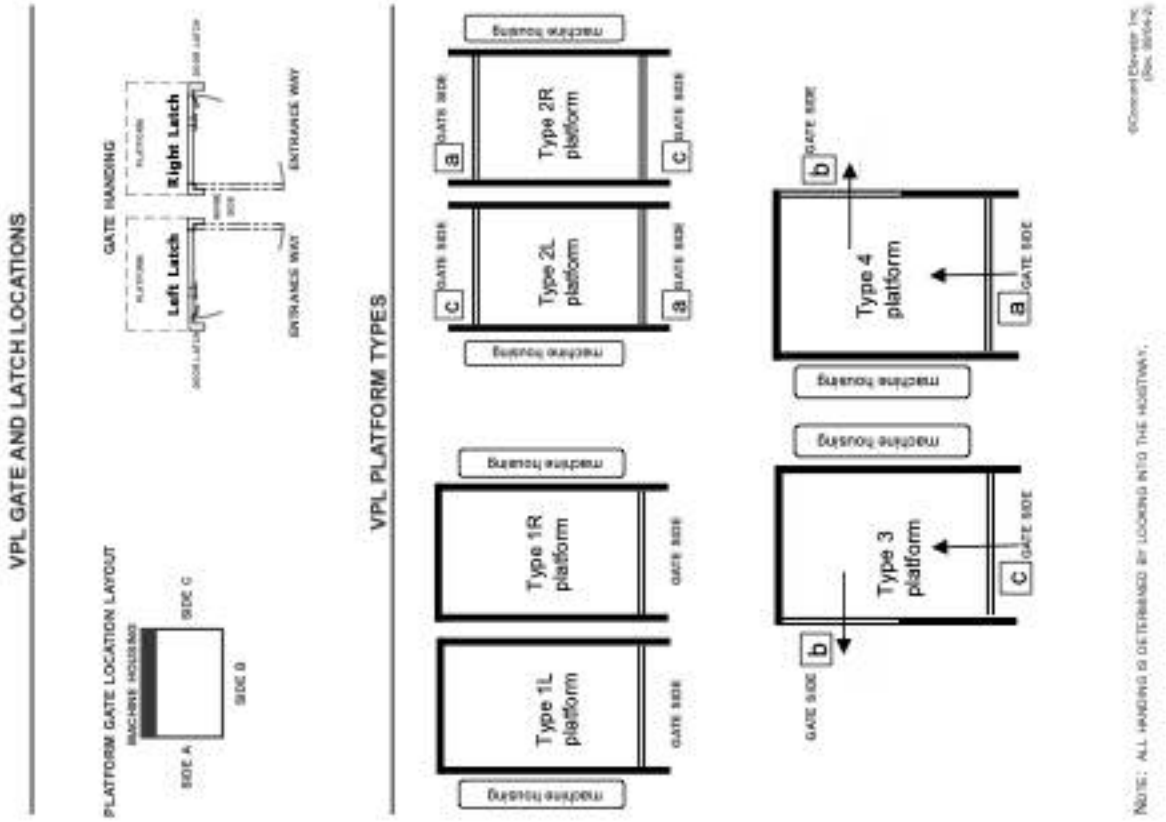

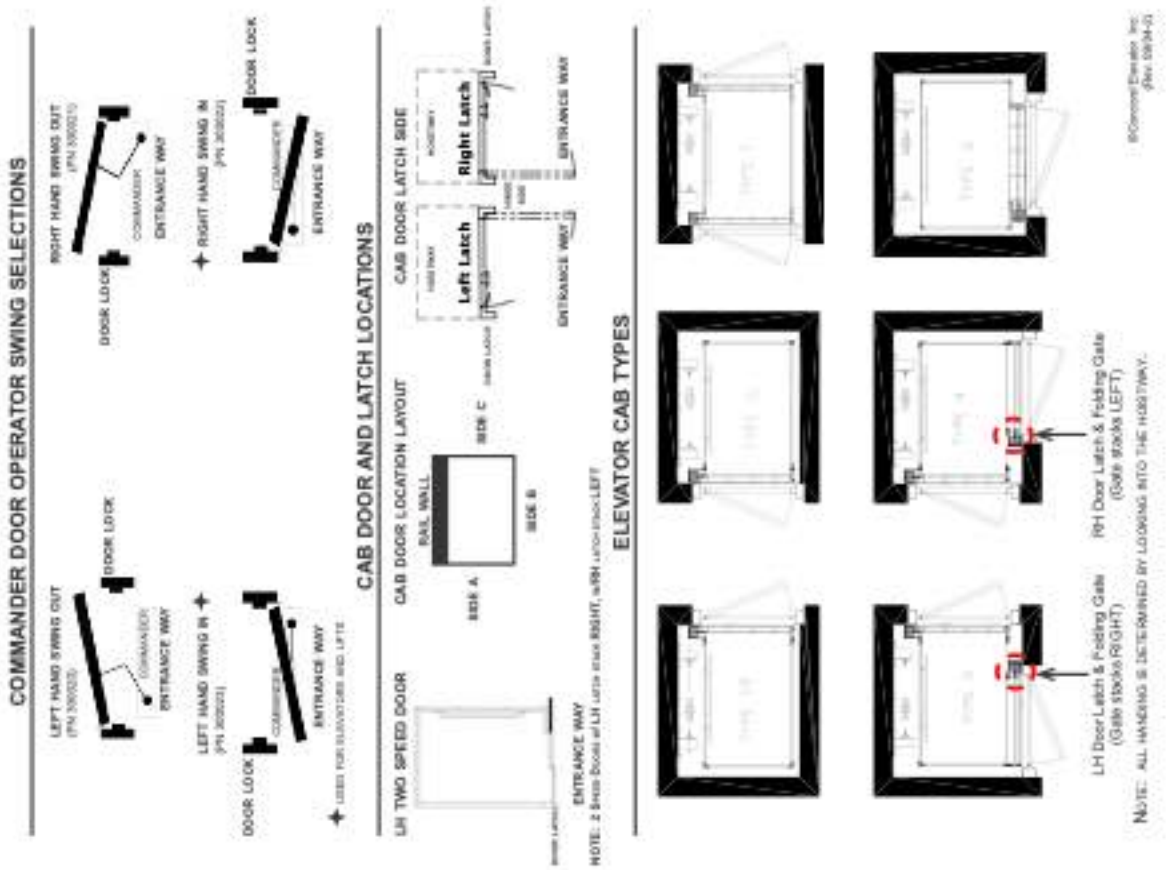

Type 1L cab – Infinity

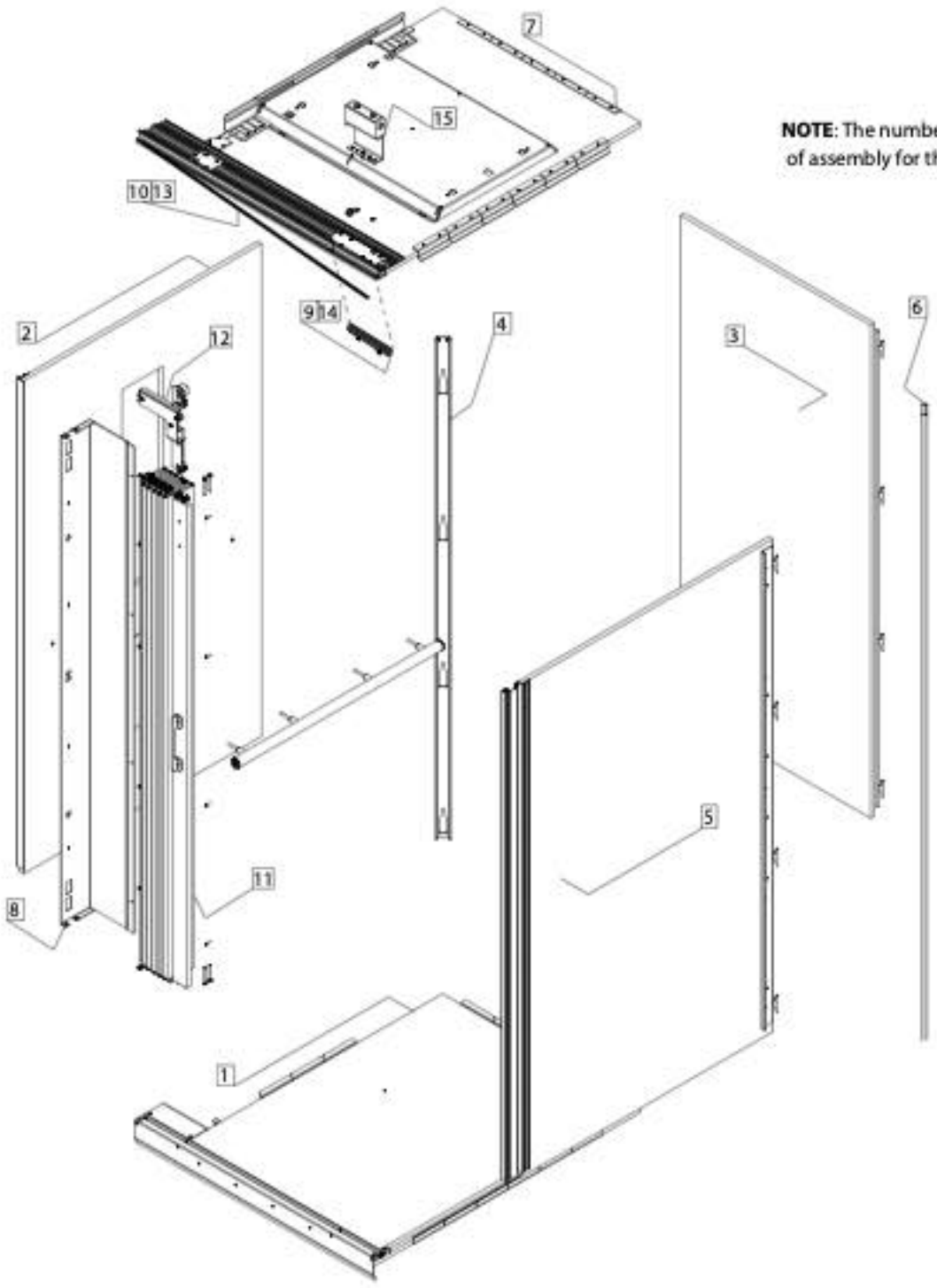

NOTE: The numbers represent the sequence of assembly for the cab components.

Order of installation

1) Floor

2) COP wall

3) Side wall opposite entrance

4) Channel joiner

5) Side wall opposite COP wall

6) Channel joiner

7) Ceiling

8) Pocket

9) Gate track corner piece - remove to install gate

10) Header splice tab - remove to install gate

11) Gate

12) Gate stabilizer

13) Header splice tab - reattach

14) Gate track corner piece - reattach

15) Gate switch

Type 1R cab – Infinity

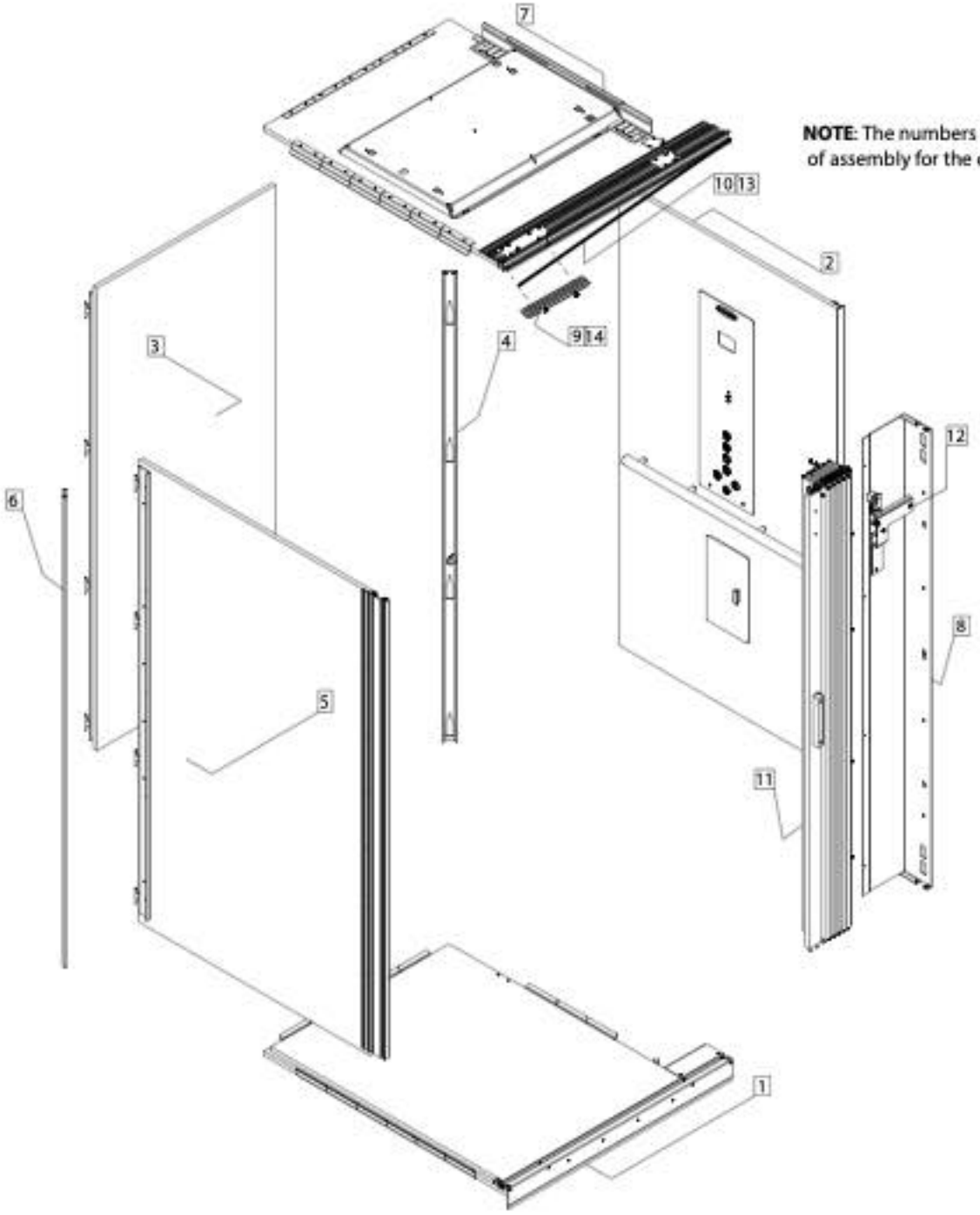

NOTE: The numbers represent the sequence of assembly for the cab components.

Order of installation

1) Floor

2) COP wall

3) Side wall opposite entrance

4) Channel joiner

5) Side wall opposite COP wall

6) Channel joiner

7) Ceiling

8) Pocket

9) Gate track corner piece - remove to install gate

10) Header splice tab - remove to install gate

11) Gate

12) Gate stabilizer

13) Header splice tab - reattach

14) Gate track corner piece - reattach

Type 2 cab – Infinity

NOTE: The numbers represent the sequence of assembly for the cab components.

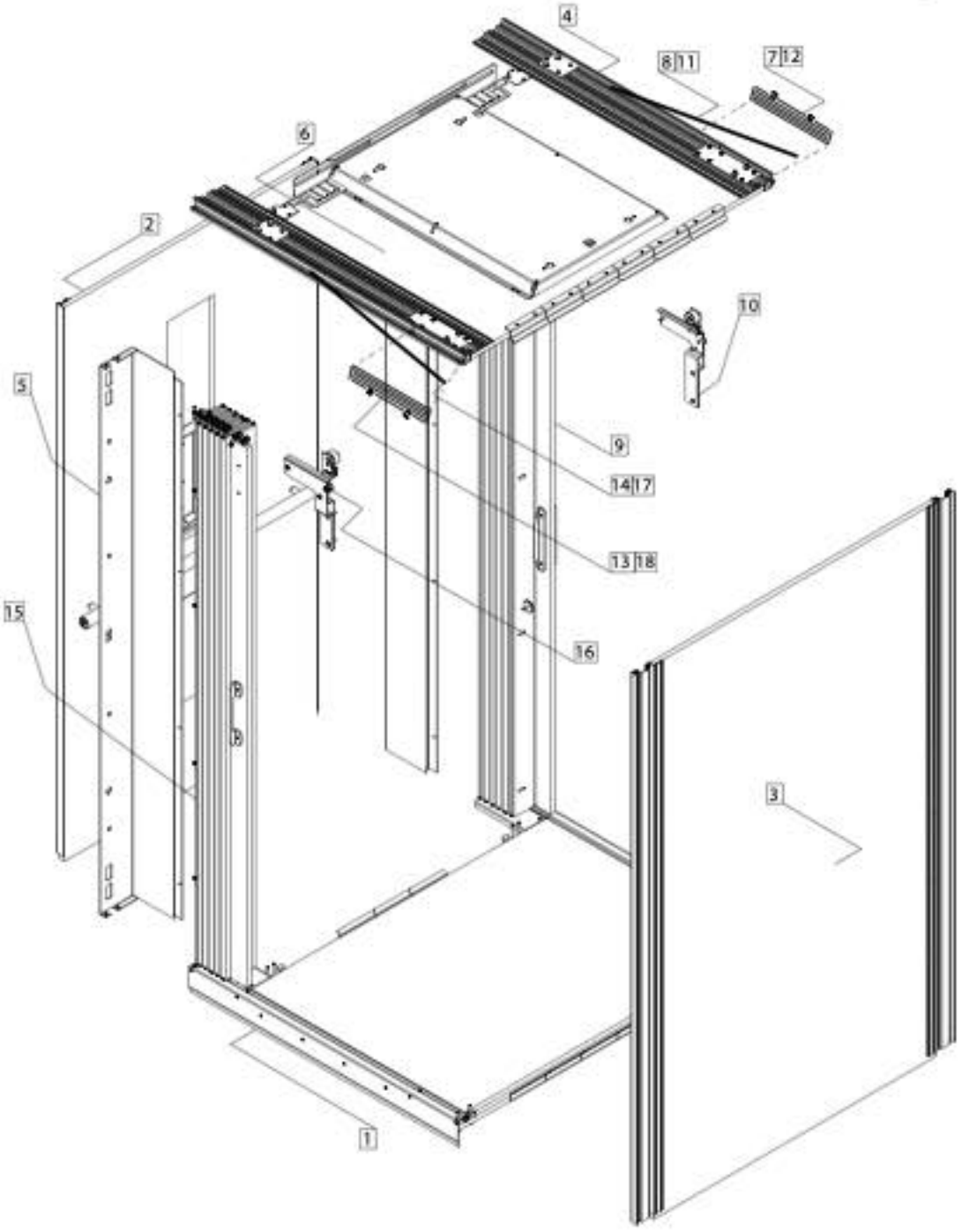

Order of installation

1) Floor

2) COP wall

3) Side wall opposite COP wall

4) Ceiling

5) Pocket

6) Pocket

7) Gate track corner piece - remove to install gate

8) Header splice tab - remove to install gate

9) Gate

10) Gate stabilizer

11) Header splice tab - reattach

12) Gate track corner piece - reattach

13) Gate track corner piece - remove to install gate

14) Header splice tab - remove to install gate

15) Gate

16) Gate stabilizer

17) Header splice tab - reattach

18) Gate track corner piece - reattach

Type 3 cab – Infinity

NOTE: The numbers represent the sequence of assembly for the cab components.

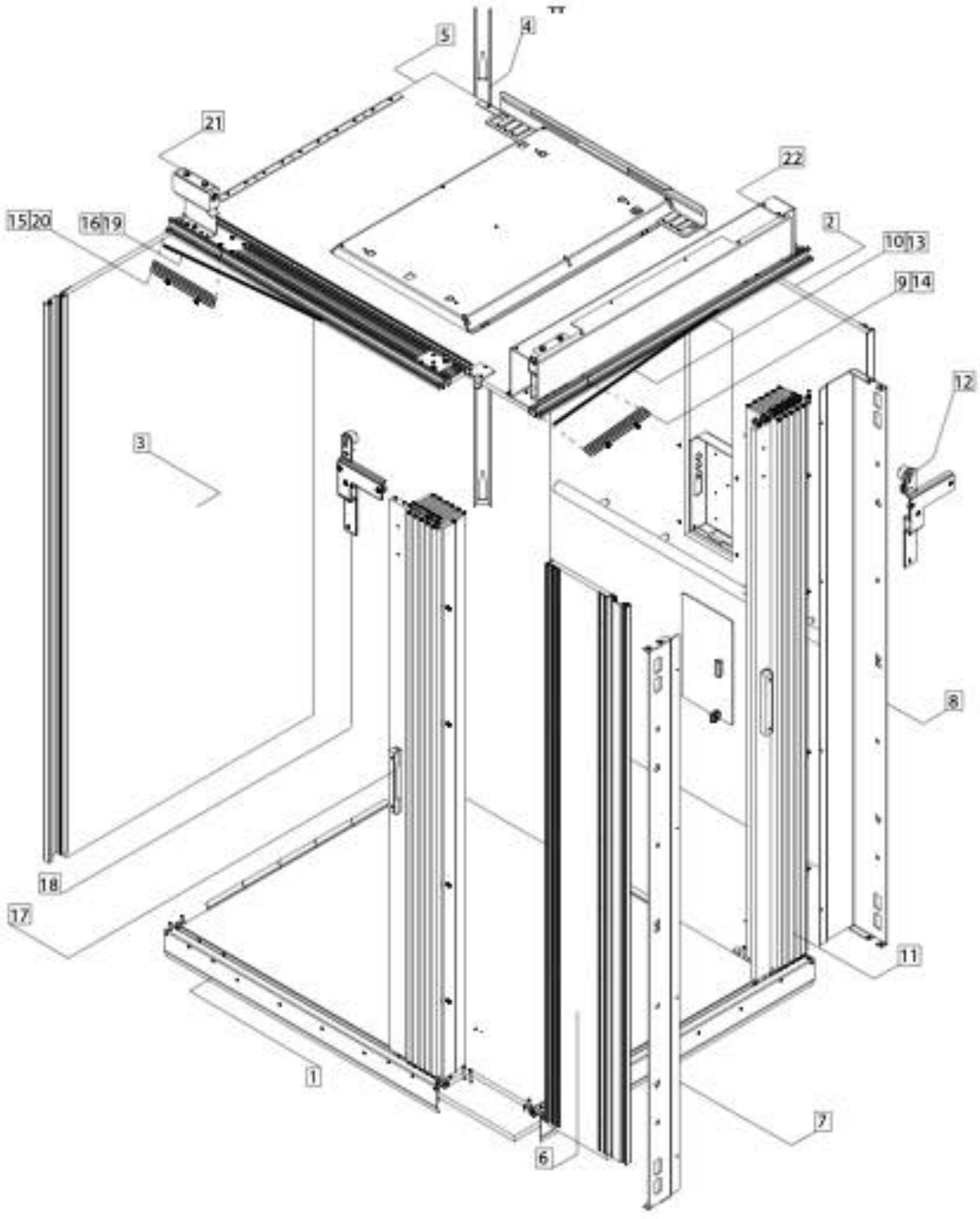

Order of installation

1) Floor

2) COP wall

3) Side wall

4) Channel joiner

5) Ceiling

6) Nib wall

7) Pocket

8) Pocket

9) Gate track corner piece - remove to install gate

10) Header splice tab - remove to install gate

11) Gate

12) Gate stabilizer

13) Header splice tab - reattach

14) Gate track corner piece - reattach

15) Gate track corner piece - remove to install gate

16) Header splice tab - remove to install gate

17) Gate

18) Gate stabilizer

19) Header splice tab - reattach

20) Gate track corner piece - reattach

21) Gate switch

22) Gate operator

Type 4 cab – Infinity

NOTE: The numbers represent the sequence of assembly for the cab components.

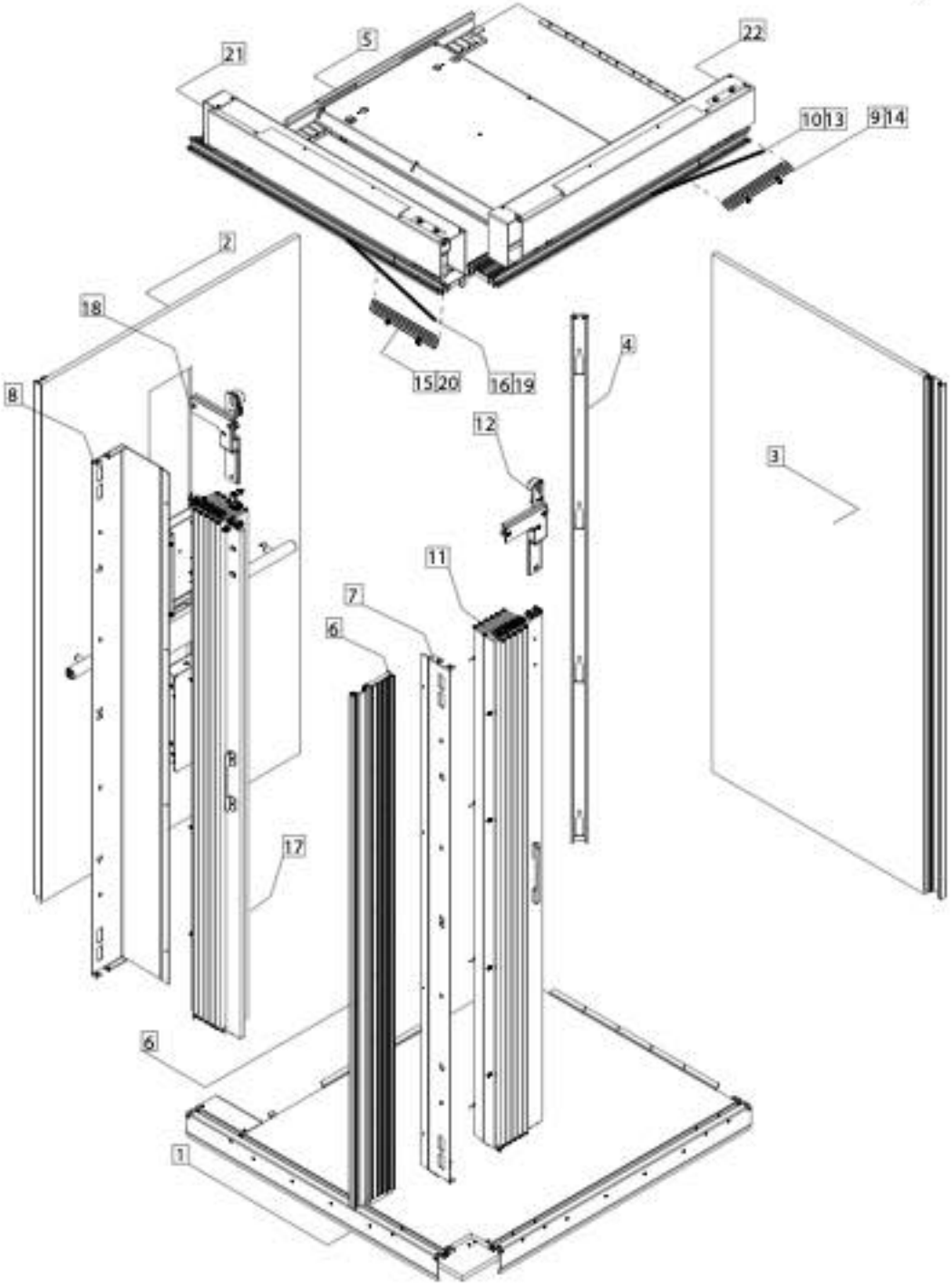

Order of installation

1) Floor

2) COP wall

3) Side wall

4) Channel joiner

5) Ceiling

6) Nib wall

7) Pocket

8) Pocket

9) Gate track corner piece - remove to install gate

10) Header splice tab - remove to install gate

11) Gate

12) Gate stabilizer

13) Header splice tab - reattach

14) Gate track corner piece - reattach

15) Gate track corner piece - remove to install gate

16) Header splice tab - remove to install gate

17) Gate

18) Gate stabilizer

19) Header splice tab - reattach

20) Gate track corner piece - reattach

21) Gate operator

22) Gate operator

Type 5 cab – Infinity (left gate stack)

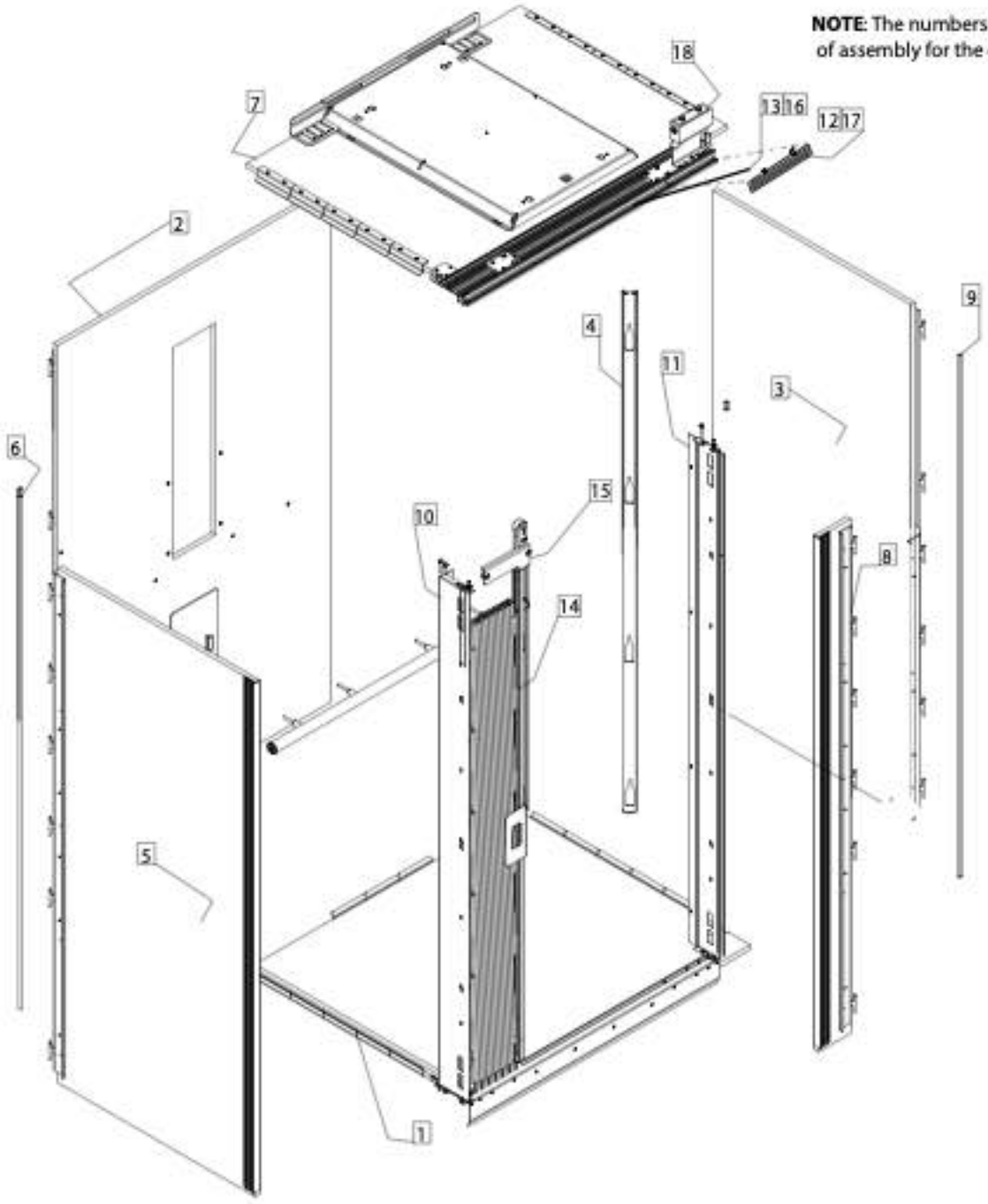

NOTE: The numbers represent the sequence of assembly for the cab components.

Order of installation

1) Floor
2) COP wall
3) Side wall
4) Channel joiner
5) Side wall
6) Channel joiner
7) Ceiling
8) Nib wall
9) Joiner channel
10) Pocket
11) Slam support
12) Gate track corner piece - remove to install gate
13) Header splice tab - remove to install gate
14) Gate
15) Gate stabilizer
16) Header splice tab - reattach
17) Gate track corner piece - reattach
18) Gate switch

Type 5 cab – Infinity (right gate stack)

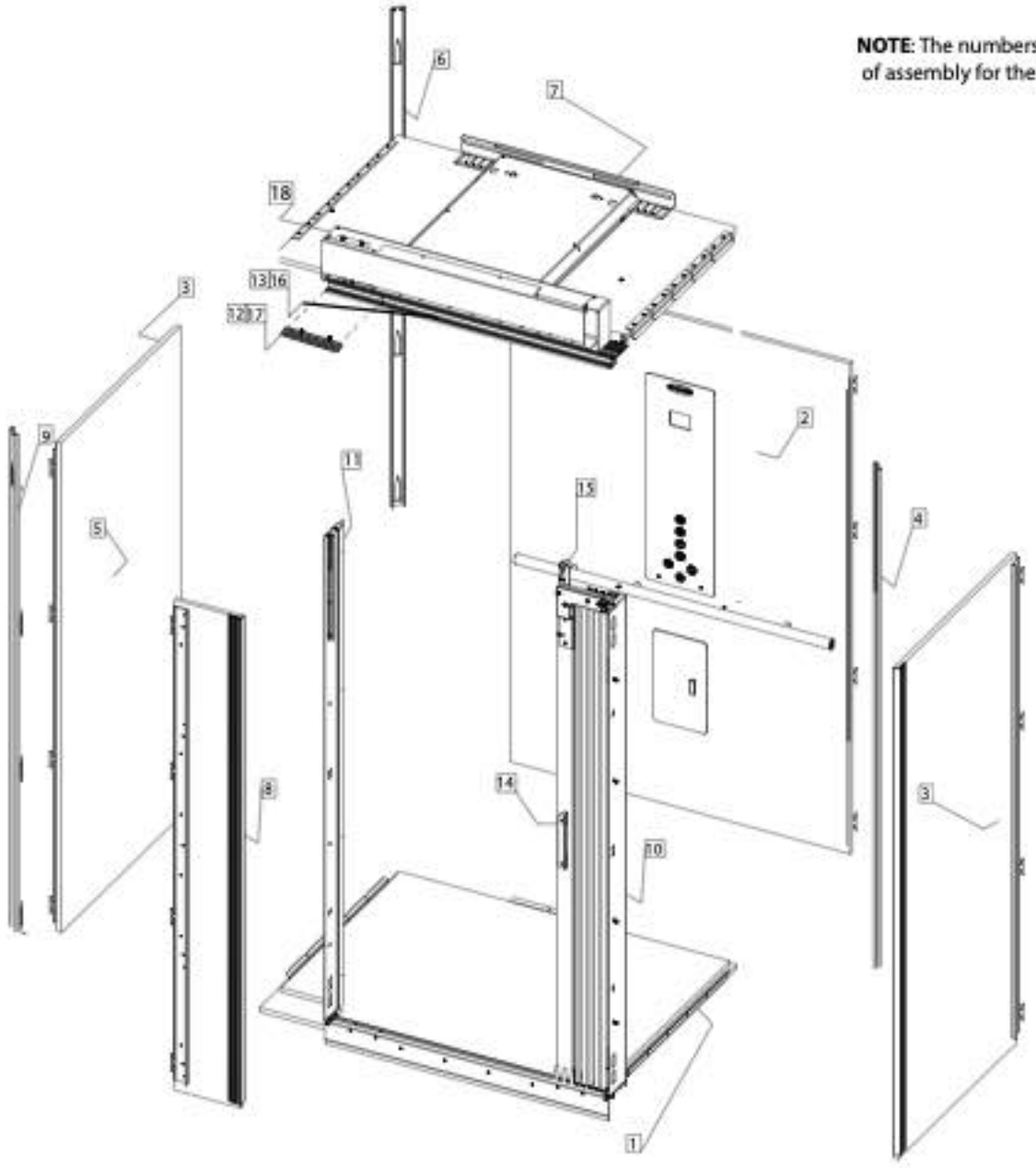

NOTE: The numbers represent the sequence of assembly for the cab components.

Order of installation

1) Floor
2) COP wall
3) Side wall
4) Joiner channel
5) Side wall
6) Joiner channel
7) Ceiling
8) Nib wall
9) Joiner channel
10) Pocket
11) Slam support
12) Gate track corner piece - remove to install gate
13) Header splice tab - remove to install gate
14) Gate
15) Gate stabilizer
16) Header splice tab - reattach
17) Gate track corner piece - reattach
18) Gate switch

Type 1L cab – Infinity HD

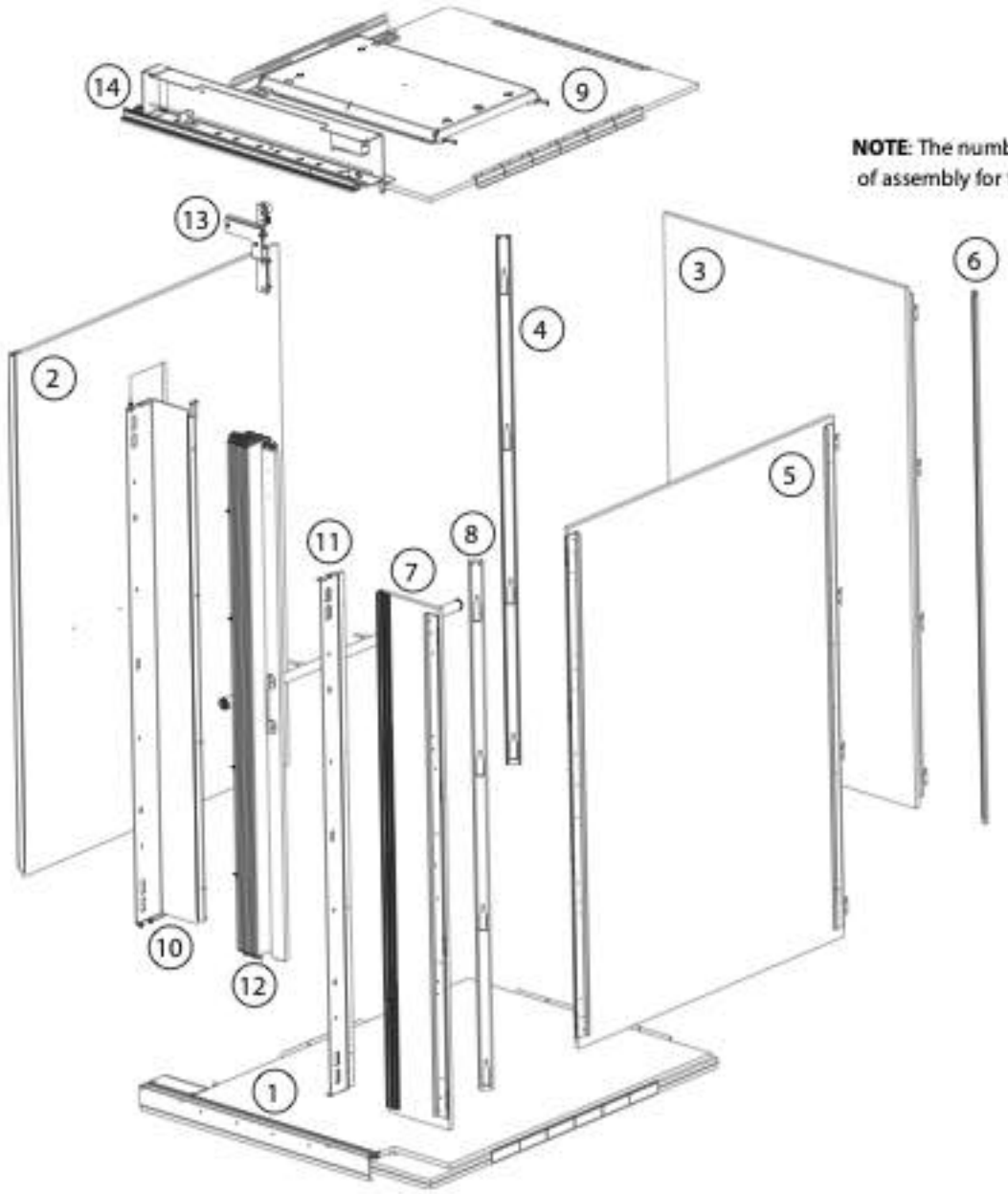

NOTE: The numbers represent the sequence of assembly for the cab components.

Order of installation

1) Floor
2) COP wall
3) Side wall opposite entrance
4) Channel joiner
5) Side wall opposite COP wall
6) Channel joiner
7) Nib wall
8) Channel joiner
9) Ceiling
10) Pocket
11) Slam support
12) Gate
13) Gate stabilizer
14) Gate operator

Type 1R cab – Infinity HD

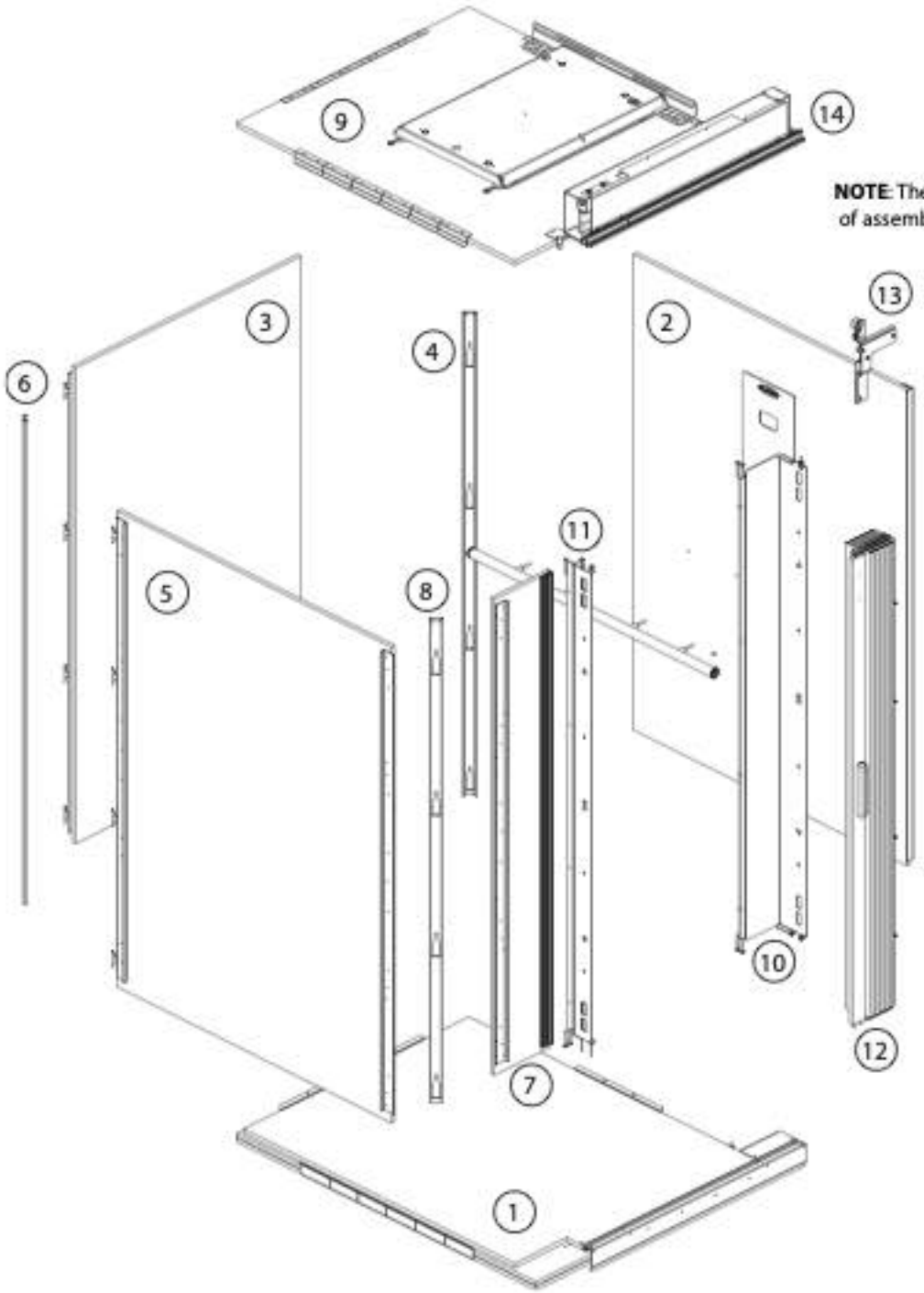

NOTE: The numbers represent the sequence of assembly for the cab components.

Order of installation

1) Floor
2) COP wall
3) Side wall opposite entrance
4) Channel joiner
5) Side wall opposite COP wall
6) Channel joiner
7) Nib wall
8) Channel joiner
9) Ceiling
10) Pocket
11) Slam support
12) Gate
13) Gate stabilizer
14) Gate operator

Type 2 cab – Infinity HD

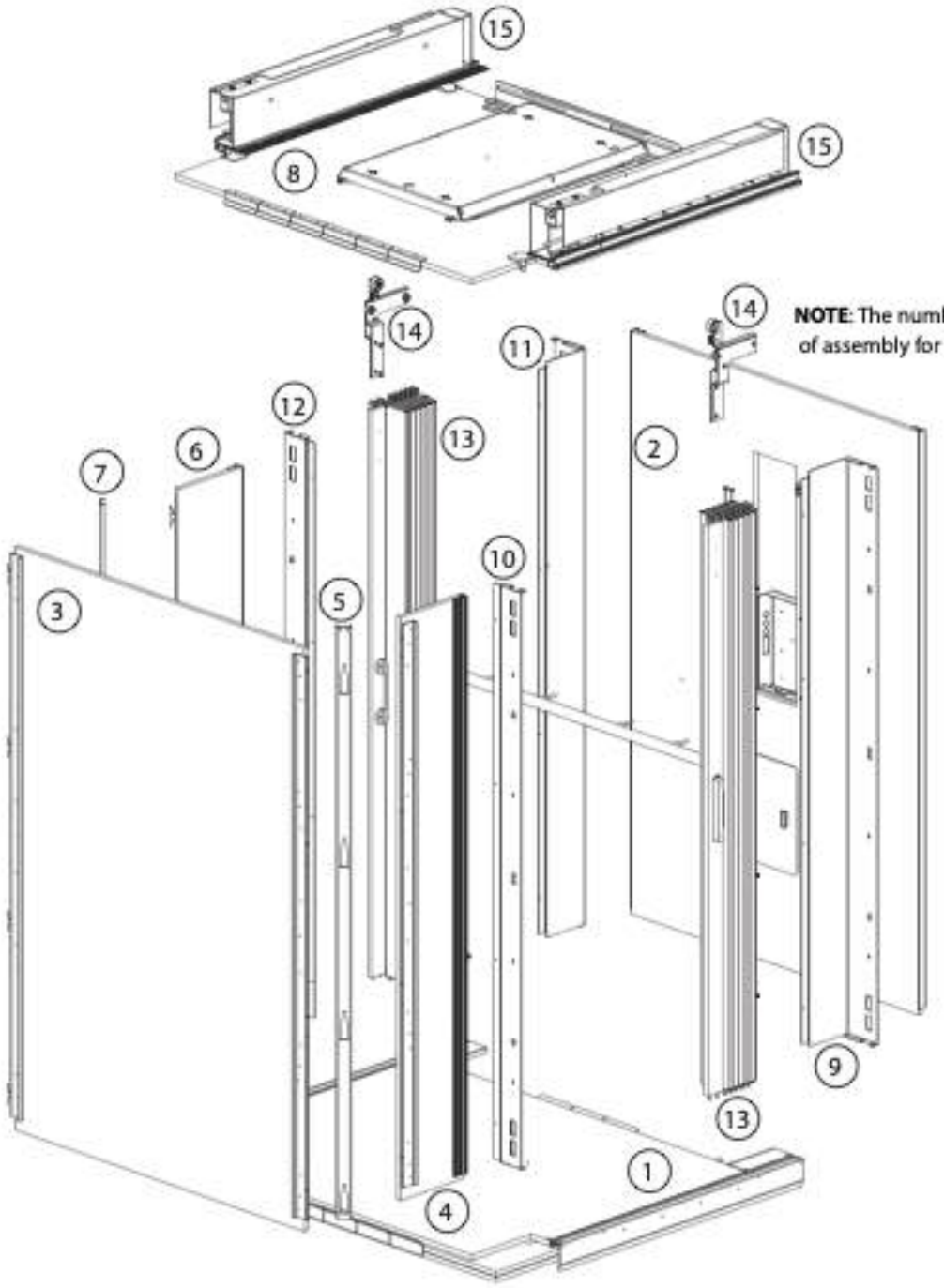

NOTE: The numbers represent the sequence of assembly for the cab components.

Order of installation

1) Floor
2) COP wall
3) Side wall opposite COP wall
4) Nib wall
5) Channel joiner
6) Nib wall
7) Channel joiner
8) Ceiling
9) Pocket
10) Slam support
11) Pocket
12) Slam support
13) Gates
14) Gate stabilizers
15) Gate operators

Type 3 cab – Infinity HD

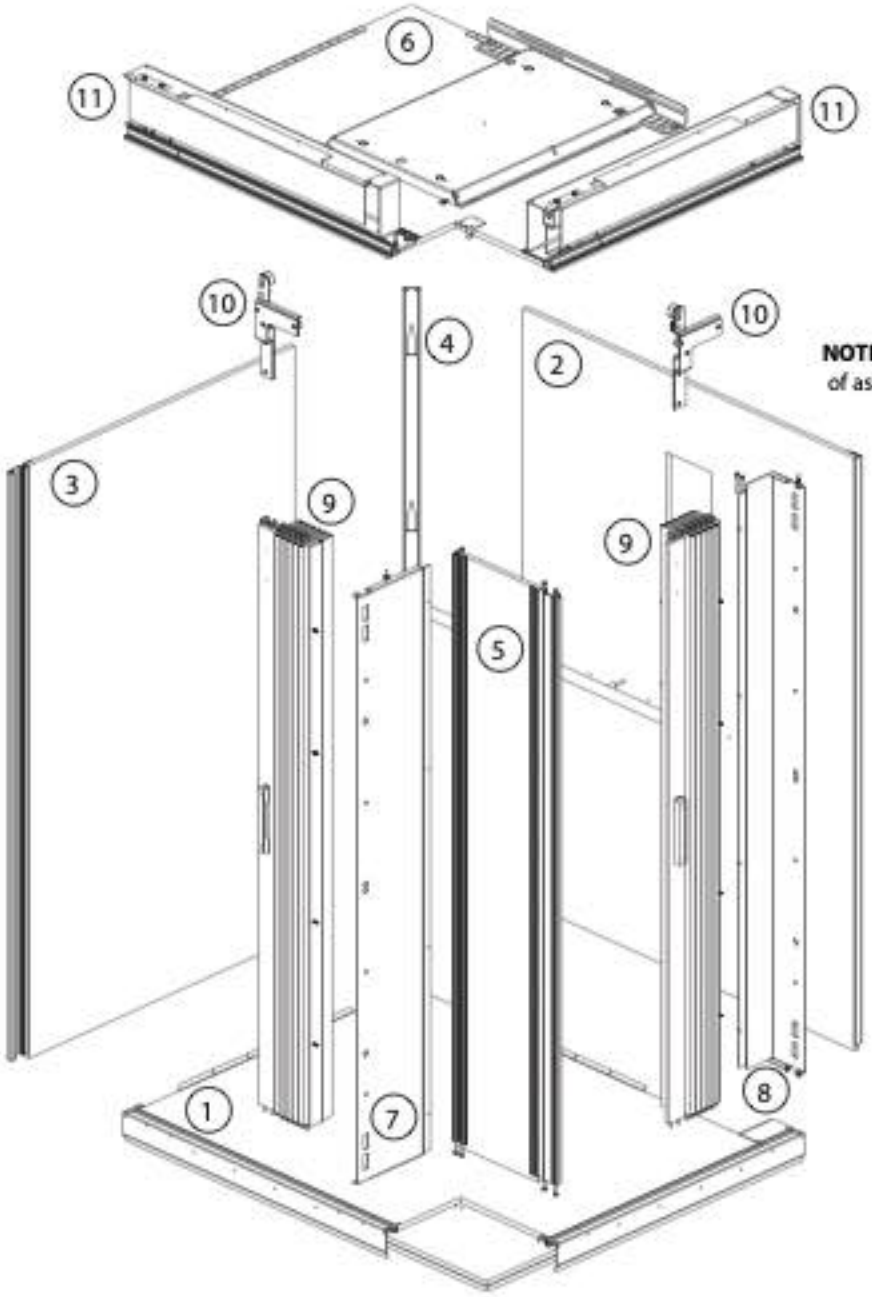

NOTE: The numbers represent the sequence of assembly for the cab components.

Order of installation

1) Floor
2) COP wall
3) Side wall
4) Channel joiner
5) Nib wall
6) Ceiling
7) Pocket
8) Pocket
9) Gates
10) Gate stabilizers
11) Gate operators

Type 4 cab – Infinity HD

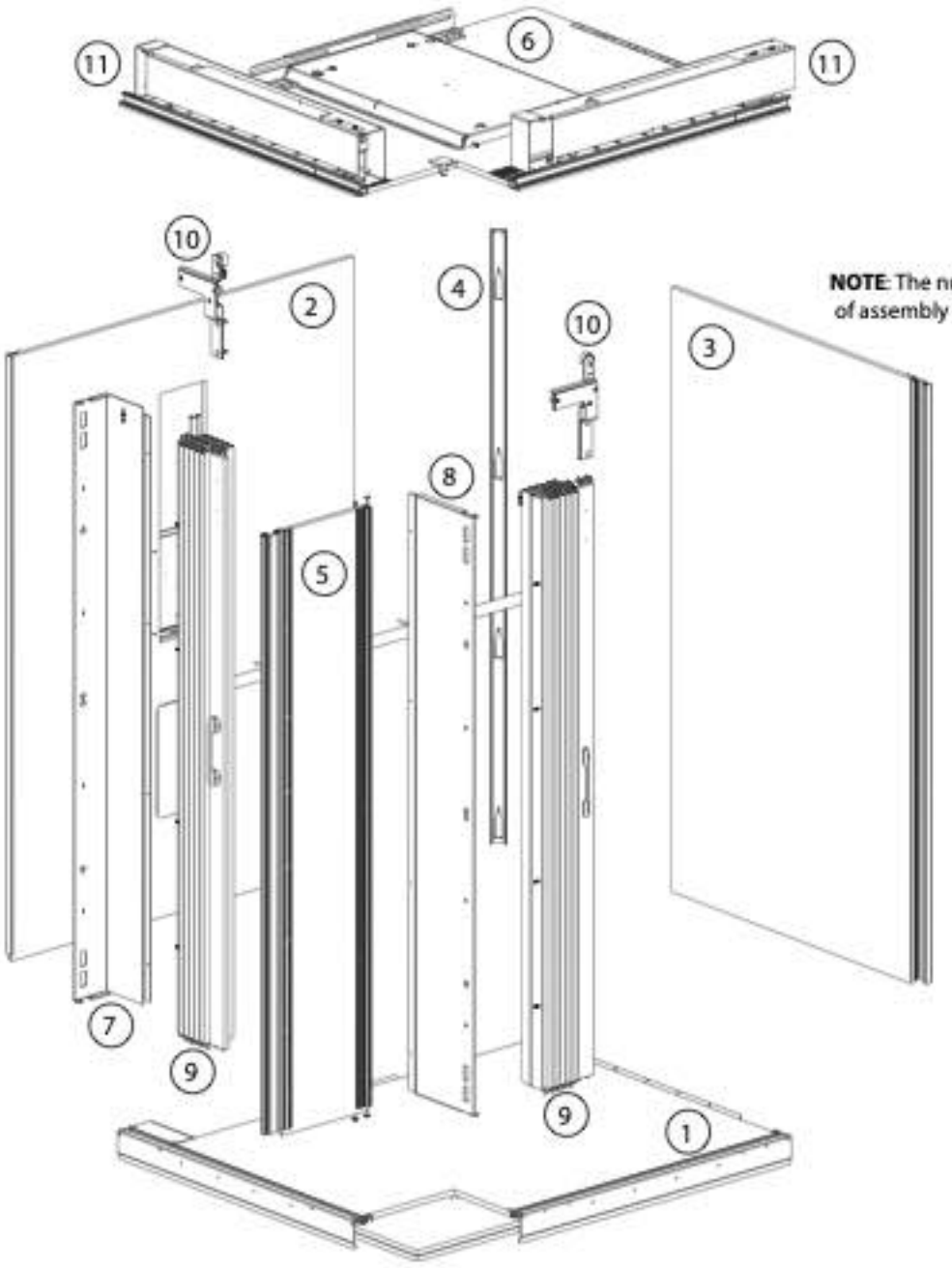

NOTE: The numbers represent the sequence of assembly for the cab components.

Order of installation

1) Floor
2) COP wall
3) Side wall
4) Channel joiner
5) Nib wall
6) Ceiling
7) Pocket
8) Pocket
9) Gates
10) Gate stabilizers
11) Gate operators

Type 5 cab – Infinity HD

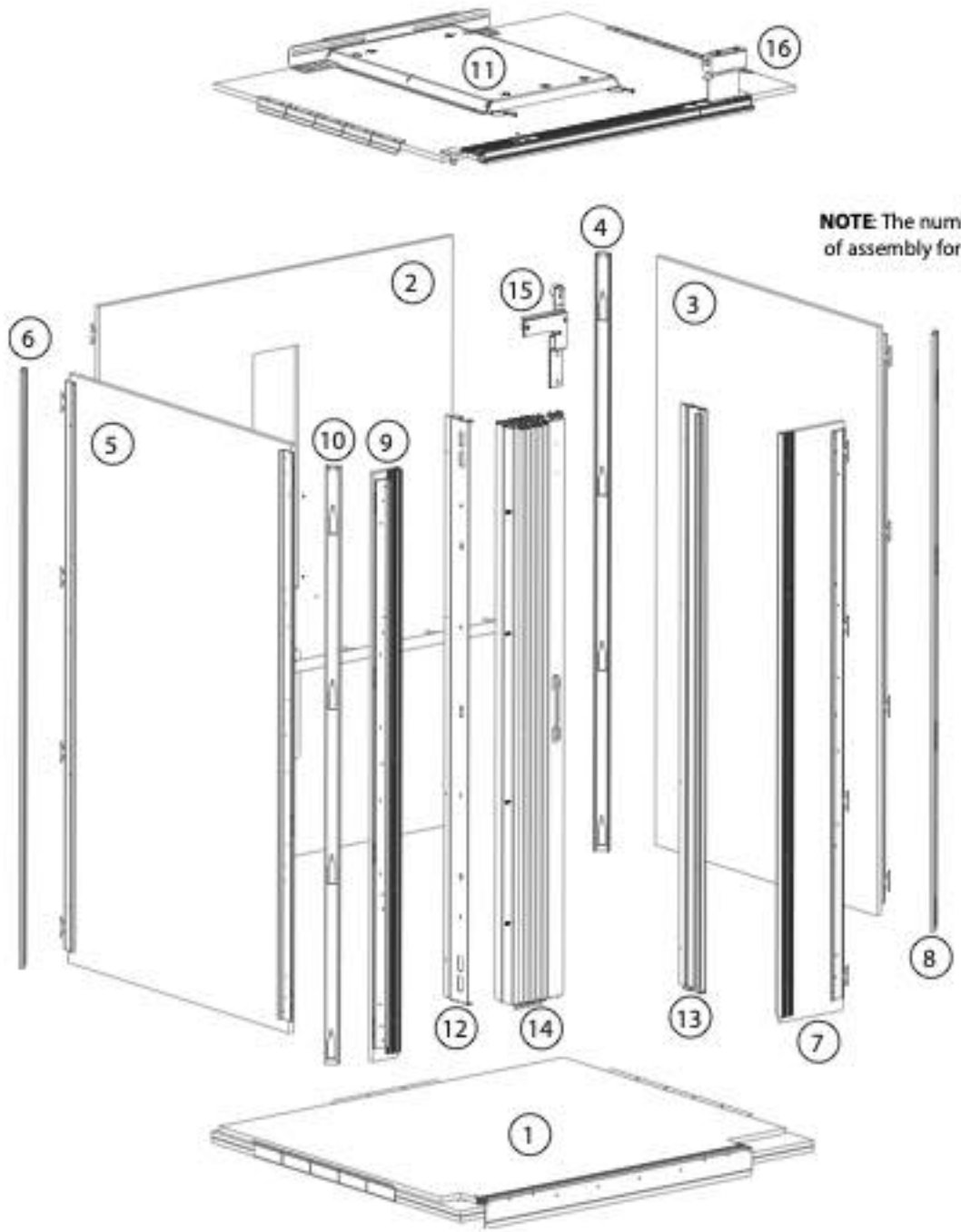

NOTE: The numbers represent the sequence of assembly for the cab components.

Order of installation

1) Floor
2) COP wall
3) Side wall
4) Channel joiner
5) Side wall
6) Channel joiner
7) Nib wall
8) Channel joiner
9) Nib wall
10) Channel joiner
11) Ceiling
12) Pocket
13) Slam support
14) Gate
15) Gate stabilizer
16) Gate switch

Cab type differences

Infinity cab sizes, number of doors per elevator, and fastener attachment locations are different from type to type, however; generally speaking, all floors, ceilings, slam side top and bottoms, and pocket side tops and bottoms have the same fastener locations.

For example, a type 3 includes an additional door with respect to type 1, and therefore you have two slams that require 2" bolts.

Ceiling to wall strap at pocket

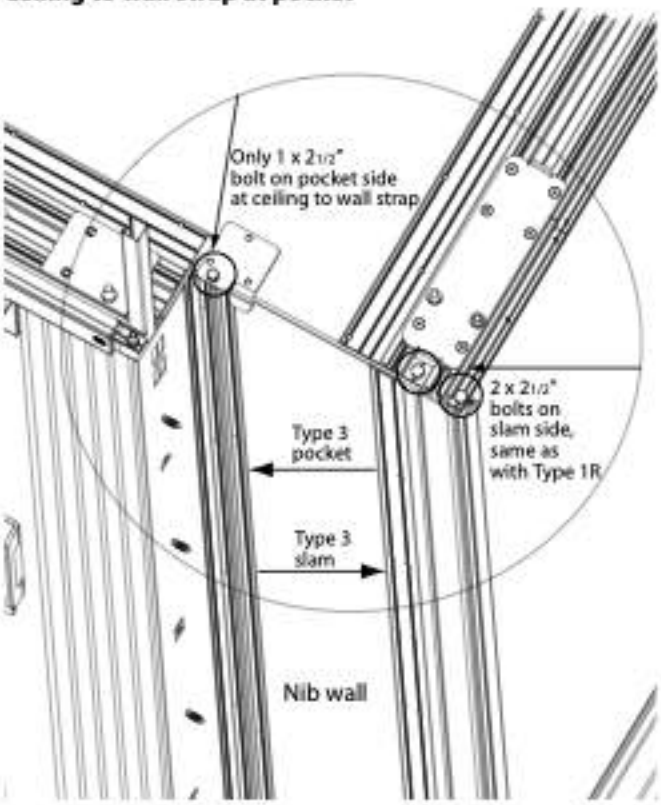

Wall to cab bottom

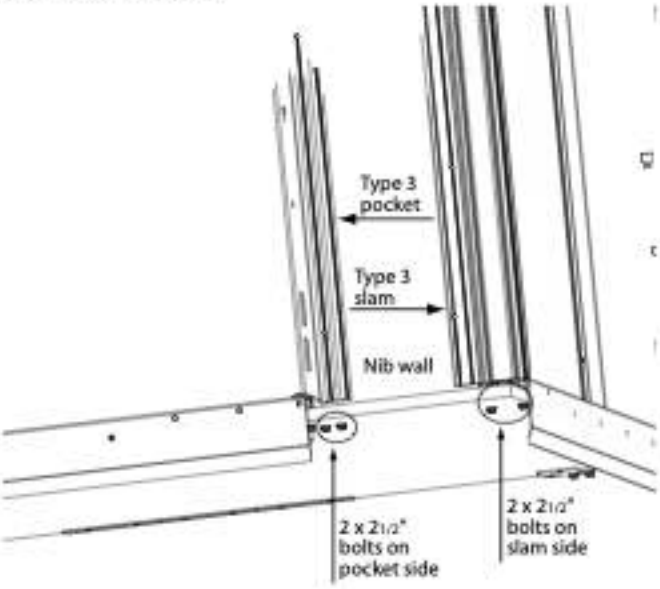

- Type 1 left is a mirror image of type 1 right. Type 1 right is described in this manual.
- •Type 2 is a combination of type 1 left and type 1 right.
- •Type 3 includes an additional door with respect to type 1. See the illustrations on the previous page.
- Type 4 is similar to type 3 but a mirror image.
- Type 5 center left-hand small includes a nib wall, slam pocket, and channel joiner at the pocket. Like type 3, use only one bolt at the pocket from the ceiling to the strapping, and two bolts underneath the floor. See the illustrations on the previous page.
- Type 5 center right-hand small is a mirror image of type 5 center left-hand small.
- Type 5 center left -hand includes two nib walls, a slam pocket, and one channel joiner per pocket. It is similar to Type 5 center left-hand small except the items shown in the illustrations below are on both sides of the entrance.
- Type 5 center right-hand is a mirror image of Type 5 center left-hand.
- Type 5 left includes one nib wall, no slam pocket, and one channel joiner at the pocket. Similar to Type 5 center left hand small except the items shown in the illustrations below are on both sides of the entrance.
- Type 5 right is a mirror image of type 5 left.

Channel joiner at wall strap; pocket corner at cab top

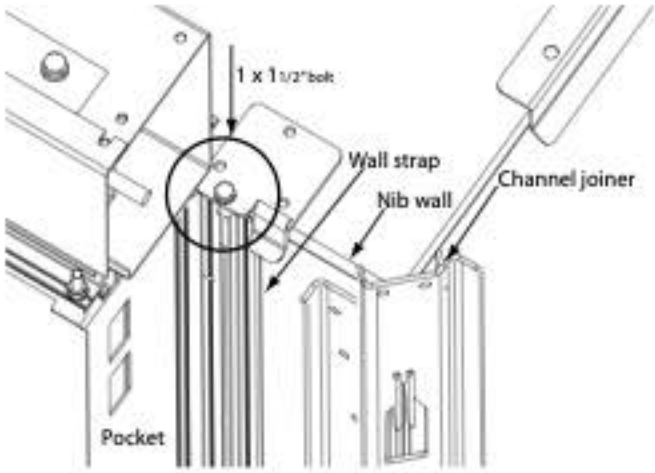

Channel joiner at wall strap; pocket corner at cab bottom

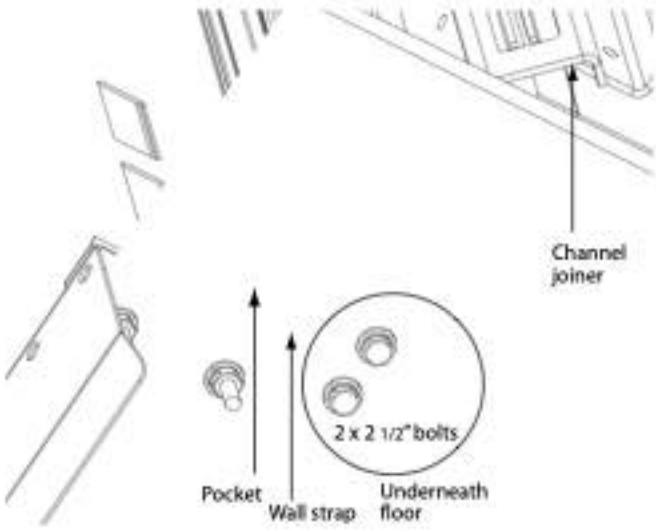

Appendix C
P-Tool Information

This appendix contains information about the Programming Tool (P-Tool) shown at the right.



To use the P-Tool (P/N 326049), connect it to the J1 connector in the bottom right-hand corner of the controller board.

Press the **[1]** key and the display will show the current status of the elevator.

You can use the P-Tool to perform the following:

- View the status of the elevator
- Change parameter settings
- View and clear the fault log
- View and clear the counters
- Put the system into temporary run mode
- Run the elevator while in temporary run mode

NOTE

For a detailed description of the controller and the programming tool, refer to the *6M2 Series Controller Operations Manual (000798)*.

NOTE

There is no need to power down the controller to plug in the P-Tool. When you plug the P-Tool into a controller that is powered on, the P-Tool displays gibberish. To clear this and read faults, press and hold the 'D' key for 3 seconds.

TEMPORARY RUN MODE

Follow these steps to use temporary run mode:

1. Connect the following temporary jumpers on the Micro-6 controller board:
   - TC4 and TC5
   - TC4 and TC6
   - TC11 and FL6-4
2. Cycle power via the UPS while holding P-Tool **1, 5, 0** to enter temporary mode.
3. Press P-Tool **A** to move up. For high speed, press P-Tool **B** also.
4. Press P-Tool **D** to move down. For high speed, press P-Tool **B** also.
5. Use the Savaria temporary run buttons (P/N 200438) as normal when in temporary mode.

NOTE

Be sure to remove the jumpers from the controller board when no longer running in temporary mode.

PROGRAMMING TOOL
SAVARIA LOGIC BOARD
Software v1.0

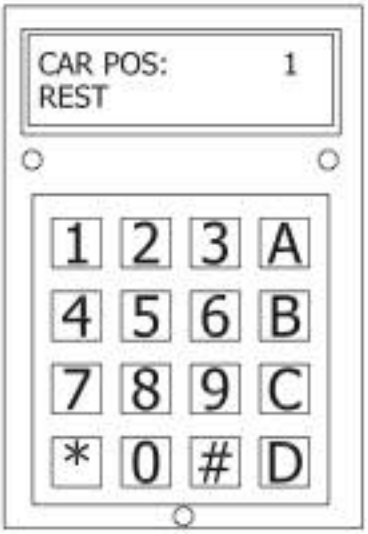

NORMAL DISPLAY:
TOP LINE = CAR POSITION
BOTTOM LINE = CAR STATUS

HOT KEY FUNCTIONS:
(*) - RESET
(A) - VIEW MENU

MENU OPTIONS:
1-NORMAL: DISPLAYS THE CAR'S POSITION AND STATUS
2-PROGRAM: ALLOWS YOU TO EDIT SYSTEM PARAMETERS
3-LOG: VIEW THE LAST 20 EVENTS
4-COUNT: THREE COUNTERS ARE PROVIDED: TOTAL, TRIP AND RE-LEVEL

A DETAILED DESCRIPTION OF EACH MENU OPTION IS PROVIDED

PROGRAMMING v1.0 (1 of 3)

CAR POS: 1 REST	PRESS (A) TO VIEW THE MENU
NORM (1) PROG (2) LOG (3) COUNTER (4)	PRESS (2) TO VIEW OR CHANGE PROGRAMMING
Password Then # Prog:	TYPE IN THE PASSWORD THEN PRESS THE (#) KEY FACTORY DEFAULT: 2,4,8,6,5
Number of Floors (2)	TYPE IN THE DESIRED NUMBER OF FLOORS AND PRESS # (ADJUSTABLE FROM 2 - 6) **NOTE:** If the # of floors is changed, default parameters are loaded and you will have to set the Hydraulic App parameter back to (1) Yes for Hydro.
Automatic PB (0)No (1)Yes (1)	SELECT (0) NO IF CONSTANT PRESSURE OPERATION IS DESIRED
Hydraulic App (0) (0)No (1)Yes	IF DRIVE SYSTEM IS HYDRAULIC SELECT (1)YES OTHERWISE SELECT (0) NO IF (0) NO IS SELECTED, RE-LEVELING IS DISABLED
Delay Up Stop X 0.01sec (000)	TYPE IN THE TIME AND PRESS # TO SET THE TIME THAT THE MOTOR WILL CONTINUE TO RUN AFTER "UL" DROPS OUT. ALLOWS CAR TO STOP HIGHER IN THE DEAD ZONE. (ADJUSTABLE 0-200 X10ms | 000 = DISABLED)
Run Timer (090) SEC	TYPE IN TIME AND PRESS # TO SET THE MAXIMUM RUN TIME (ADJUSTABLE FROM 30 - 180 SECONDS) See NOTE below.
Car Light Timer (05)Minute	TYPE IN THE TIME AND PRESS # TO SET THE TIME THE CAR LIGHT SHALL REMAIN ON AFTER THE COMPLETION OF A CALL (1-10 MINUTES)
Non-interference Timer (2) Sec	TYPE IN THE TIME AND PRESS # TO SET THE TIME BEFORE A NEW CALL CAN BE ACCEPTED (2-60 SEC)
Car Call Cancel Timer (10) Sec	TYPE IN THE TIME AND PRESS # TO SET THE TIME AFTER WHICH THE CALL WILL BE DROPPED IF THE CAR IS UNABLE TO RESPOND (ADJUSTABLE 0 - 60 SECONDS)

ONCE IN PRORAMMING MODE:

TO MAKE A CHANGE PRESS THE KEY FOR THE DESIRED NUMBER AND PRESS THE (#) KEY TO ACCEPT THE CHANGE.

(A) TO RETUN TO THE MAIN MENU
(B) TO SCROLL UP
(C) TO SCROLL DOWN
(D) TO CLEAR THE CURRENT VALUE.
(#) TO ACCEPT THE CHANGE
(*) TO PERFORM A RESET

NOTE: If the RUN TIMER trips on a geared unit and the lift is not at floor level, it will have to be moved to a landing before the reset can be performed.

PROGRAMMING v1.0 (2 of 3)

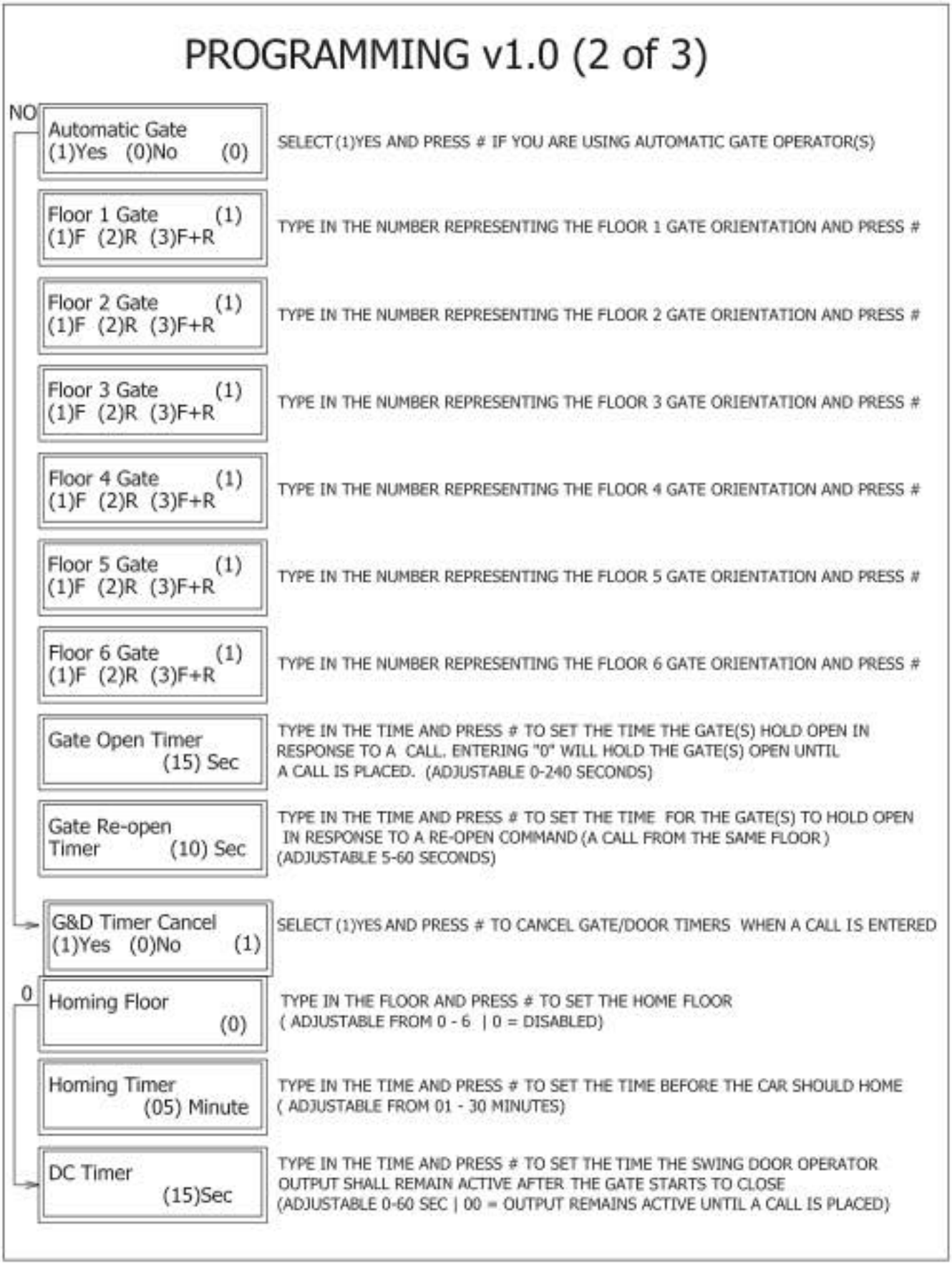

PROGRAMMING v1.0 (3 of 3)

Short Floors 1/2 (0)No (1)Yes (0)	SELECT (1)YES AND PRESS # TO INHIBIT HIGH SPEED IN BOTH DIRECTIONS WHEN RUNNING BETWEEN FLOORS 1 AND 2 MIN FLOOR DISTANCE IS 7" FOR APB AND 14" FOR CP
Short Floors 2/3 (0)No (1)Yes (0)	SELECT (1)YES AND PRESS # TO INHIBIT HIGH SPEED IN BOTH DIRECTIONS WHEN RUNNING BETWEEN FLOORS 2 AND 3 MIN FLOOR DISTANCE IS 7" FOR APB AND 14" FOR CP
Short Floors 3/4 (0)No (1)Yes (0)	SELECT (1)YES AND PRESS # TO INHIBIT HIGH SPEED IN BOTH DIRECTIONS WHEN RUNNING BETWEEN FLOORS 3 AND 4 MIN FLOOR DISTANCE IS 7" FOR APB AND 14" FOR CP
Short Floors 4/5 (0)No (1)Yes (0)	SELECT (1)YES AND PRESS # TO INHIBIT HIGH SPEED IN BOTH DIRECTIONS WHEN RUNNING BETWEEN FLOORS 4 AND 5 MIN FLOOR DISTANCE IS 7" FOR APB AND 14" FOR CP
Short Floors 5/6 (0)No (1)Yes (0)	SELECT (1)YES AND PRESS # TO INHIBIT HIGH SPEED IN BOTH DIRECTIONS WHEN RUNNING BETWEEN FLOORS 5 AND 6 MIN FLOOR DISTANCE IS 7" FOR APB AND 14" FOR CP
Call But. Fault 0-No 1-A 2-U (2)	No: WILL DISABLE THIS FEATURE A: WILL FLASH ALL CODES TO THE CALL BUTTON LIGHTS U: WILL FLASH ONLY THOSE CODES WHICH ARE USER CORRECTABLE
Auto Shutdown Counter X10(000)	TYPE IN THE NUMBER AND PRESS # TO SET THE NUMBER OF TRIPS BEFORE THE ELEVATOR IS DISABLED (ADJUSTABLE 0 - 999 | 0 = DISABLED) THIS FEATURE WILL BE DISABLED AFTER FOUR ACTIVATIONS
CALL 3 ASSIGNMENT (3)	TYPE IN THE FLOOR NUMBER WHICH THE CAR WILL RUN TO WHEN THIS CALL IS PLACED. THE FLOOR 3 DOOR SETTINGS WILL APPLY WHEN THIS IS USED. (THIS PARAMETER DOES NOT SHOW UP WHEN THE NUMBER OF FLOORS >= 3)
CALL 4 ASSIGNMENT (4)	TYPE IN THE FLOOR NUMBER WHICH THE CAR WILL RUN TO WHEN THIS CALL IS PLACED. THE FLOOR 4 DOOR SETTINGS WILL APPLY WHEN THIS IS USED. (THIS PARAMETER DOES NOT SHOW UP WHEN THE NUMBER OF FLOORS >= 4)
CALL 5 ASSIGNMENT (5)	TYPE IN THE FLOOR NUMBER WHICH THE CAR WILL RUN TO WHEN THIS CALL IS PLACED. THE FLOOR 5 DOOR SETTINGS WILL APPLY WHEN THIS IS USED. (THIS PARAMETER DOES NOT SHOW UP WHEN THE NUMBER OF FLOORS >= 5)
CALL 6 ASSIGNMENT (6)	TYPE IN THE FLOOR NUMBER WHICH THE CAR WILL RUN TO WHEN THIS CALL IS PLACED. THE FLOOR 6 DOOR SETTINGS WILL APPLY WHEN THIS IS USED. (THIS PARAMETER DOES NOT SHOW UP WHEN THE NUMBER OF FLOORS = 6)
Modify Password (1)Yes (0)No (0)	TYPE IN C TO KEEP THE PASSWORD AND VIEW NEXT PARAMETER TYPE IN 1 AND PRESS # TO CHANGE THE PASSWORD NOTE: PASSWORD MUST BE 5 DIGITS (NUMERICAL ONLY)

LOG



PRESS (A) TO VIEW THE MENU

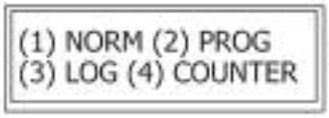

PRESS (3) TO VIEW THE LOG



THE FIRST LINE IS A DESCRIPTION OF THE EVENT
2U=EVENT OCCURED AT 2ND FL WHILE TRAVELING UP
L= LAST EVENT



(C) VIEWS PREVIOUS EVENT UNTIL "NO EVENTS" IS SEEN

ONCE IN LOG MODE:

THE LOG STORES 20 ERRORS IN A LAST IN FIRST OUT FORMAT.

(A) TO RETUN TO THE MAIN MENU
(B) TO VIEW LATER EVENT
(C) TO VIEW EARLIER EVENT
(D) TO CLEAR THE LOG
Note: PASSWORD IS REQUIRED TO CLEAR LOG
(*) TO PERFORM A RESET

COUNTERS



PRESS (A) TO VIEW THE MENU

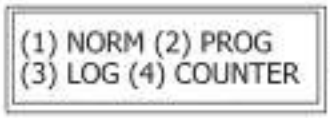

PRESS (4) TO VIEW COUNTERS

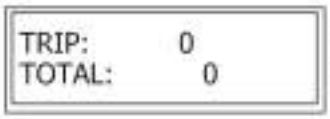

THE "TRIP" AND "TOTAL" RUN COUNTERS ARE DISPLAYED



(C) TO VIEW UP LEVELING COUNTER

ONCE IN COUNTER MODE:

THE SYSTEM HAS THREE COUNTERS.

TRIP: INCREMENTS EACH TIME THE CAR MOVES IN RESPONSE TO A CALL. RESETTABLE

TOTAL: SAME AS TRIP BUT NOT RESETTABLE

UP LEVELING: INCREMENTS EACH TIME THE CAR MOVES UP WITHOUT A CALL. RESETTABLE

(A) TO RETUN TO THE MAIN MENU
(B) TO VIEW PREVIOUS COUNTERS
(C) TO VIEW NEXT COUNTER
(D) TO CLEAR THE COUNTERS
Note: PASSWORD IS REQUIRED TO CLEAR COUNTERS
(*) TO PERFORM A RESET

Appendix D
Diagnostic Beep Codes

The Micro-6 controller can be set up to provide audible fault codes (diagnostic beep codes). These codes can help the user diagnose certain problems themselves and also provide information to the dealer as to why a lift isn't functioning properly.

To enable the codes, use the P-Tool and set the parameter "call but.fault" to:

- 0 for no audible codes
- 1 for User codes only
- 2 for User and Service codes

User codes provide feedback to the user and do not require a service visit.

- 1 short beep - a gate is open or the in-car Stop switch is activated. Make sure the in-car Stop switch is in the Run position. Check that the car gate is closed.
- 2 short beeps - a door is open. Check that the landing door is closed.
- 3 short beeps - gate needs to be cycled. Manually open the gate.
- Single beep every 30 seconds - power failure, unit will only respond to calls/commands to go in the down direction.

Service codes are those that require a site visit. All Service codes begin with one long 2-second beep.

- 1 long and 1 short beep - possible problems are overload trip, run timer fault, safety circuit open, door lock fault or auto shutdown counter.
- 1 long and 2 short beeps - possible problems are re-level shutdown or low pressure switch activated.
- 1 long and 3 short beeps - possible problems are selector fault, selector encoding or position error.

Appendix E
Maintenance

NOTE

For Maintenance Procedures that are code-compliant, please refer to ASME A17.1-2010/CSA B44-10, Section 8.6 (Maintenance, Repair, Replacement, and Testing).

NOTE

If the unit has been shut down for an extended period of time, be sure to perform maintenance before startup.

Regular maintenance will keep the elevator in proper operating condition. To ensure proper operating condition of the unit, the items listed below must be inspected and maintained. For normal and heavy use, maintenance should be scheduled at minimum **once a year.** For units with an excessive number of daily cycles, inspection/maintenance should be performed **every six months.**

1. Tighten all rail and cab fastening bolts.
2. Lubricate the door hinges and adjust the door closure if required.
3. Lubricate the rails with light grease, such as white lithium.
4. For a Gatemate operator, lubricate the shaft and bushing using a general silicone lubrication spray (lubricate on installation as well).
5. Inspect the traveling cable for wear. Replace the cable if any cuts or damage to the jacket are evident.
6. Inspect the elevator cables for wear or damage and replace if necessary. Always replace the safety washers at the swaged end of the cable when replacing cables. The washers are provided with replacement cables.
7. Inspect the safety washers at the swaged end of the elevator cables. Put the elevator on slack rope high enough so you can safely get under the elevator. Pull the manual lowering device so there is enough slack in the rope to pull the rope with the swag fitting down to view the washer. Replace the washer if there is any visible damage.
8. Check for any hose/pipe leaks. Replace and/or tighten the fittings to correct any hydraulic leaks found.
9. Check the fluid level of the pump reservoir (with the elevator at its lowest landing), and fill as required. (Use Grade 32 Hydraulic Oil). There must be at least 1" inch of oil on the dipstick.
10. Tighten any hose connections or bleeder valves found loose. Check the hydraulic cylinder (jack) for any leaks. If necessary, the packing seals may have to be replaced.
11. If you have a problem with the cab "bouncing", wipe some maxiglide oil additive onto the jack and add some to the hydraulic tank as required.
12. Replace the batteries inside the control panel as indicated on the battery label.
13. Perform the required maintenance to the door locks.
14. Activate and test the safety mechanism.

Appendix F
110V Gate Operator

This appendix provides documentation for the 110V gate operator.

KIS100
Power Gate Operator
Installation Manual - Savaria

Table of Contents

Introduction	Page 1
Technical Specifications	Page 2
Installation Mechanical	Page 3
Installation Electrical	Page 5
Electrical Schematic	Page 6
Troubleshooting	Page 7

PATENT PENDING

Porta Inc.
250 Hamilton Rd.
Arlington Heights,IL 60005

Phone: (847) 593-4900
Fax: (847) 593-1394
website: emiporta.com

Page 1

KIS100 Power Gate Operator

Introduction

The KIS100 gate operator is a proven product that provides a user friendly, dependable and cost effective means of automating accordion gates used in residential and LULA elevators. It has passed an accelerated life test of 25 years of normal residential use (100,000 cycles).

This product conforms to UL508A, ASME A17.1A, ASME A17.5, CSA-B44-944, and CSA-C22.22, No. 14-M91.

Features & Benefits

- Two Speed bi-directional gate operation
- Selectable Auto-Close feature
  Will automatically close the gate when the open signal is removed
- GAL type G gate switch mounts within the KIS100 chassis
- Micro-switch slow downs and limits
  Provide a simple and accurate means of decelerating and stopping the gate
- Magnetic coupling of gate to operator
  Provides a simple and positive means of preventing damage or injury in the case of an obstruction. If the resistance to gate closure exceeds the magnetic coupler, the gate disengages and becomes a manual gate. There is nothing to get out of adjustment or reset. This coupling system also allows for moderate mis-alignment of operator and gate.
- 14" gate arm
  Reduces bottom hinge lag
- Quiet Operation
  A precision ground lead screw drive system provides virtually silent operation.
- Retrofit existing installations
  The footprint of the KIS100 is the same as the standard Accordion gate
- PWM motor drive
  Provides quiet operation, longer motor life and reduced power consumption.

ATTENTION!

WARNING: The installation of this device should only be performed by a professional elevator technician that has a full understanding of this device's operation and function.

Note: If there is any doubt regarding the installation procedures, please call the factory for assistance. We are available M-F 8:00 am to 5:00 pm Central Time.

WARNING: Failure to comply with all instructions and "WARNING"(s) can result in a safety system compromise. This, in turn, can result in serious injury or death.

PATENT PENDING

PORTA Inc.

Porta Inc.
250 Hamilton Rd.
Arlington Heights,IL 60005

Phone: (847) 593-4900
Fax: (847) 593-1394
website: emiporta.com

KIS1OO-Accordion Gate Operator

Page 2

Technical Specifications

Input Power	120VAC
Motor	90VDC
Motor Drive	1A(P.W.M.)
High Speed (nom.)	107sec.
High Speed Adj.	0-100%
Low Speed Adj.	0-80%
Drive Belt	0-Ring (343)
Control Interface	12/24 VDC
Gate Switch	GTS100

Dimensional Data

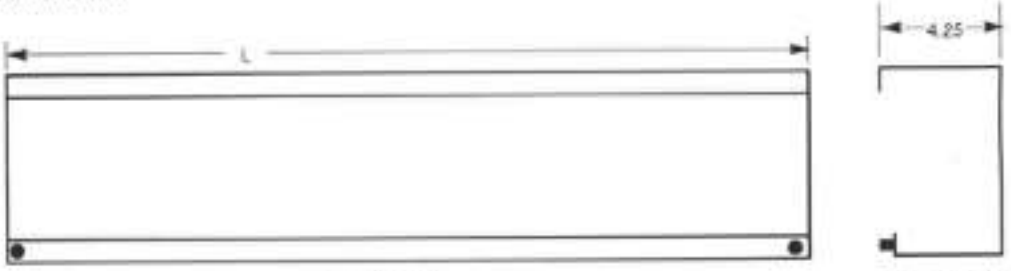

Front View

Side View

Gate Travel	
29 Inches	36 1/2"
32 Inches	39 1/2"
36 Inches	43 1/2"
42 Inches	49 1/2"

PATENT PENDING

PORTA Inc.

Porta Inc.
250 Hamilton Rd.
Arlington Heights,IL 60005

Phone: (847) 593-4900
Fax: (847) 593-1394
website: emiporta.com

Page 3

KIS1OO-Accordion Gate Operator

INSTALLATION - MECHANICAL

1. Unpack the unit, remove the cover, and check for any physical damage before proceeding.

2. Check to see that you have the correct hand unit. The operator is designed so the motor is on the stack side of the gate. The operator can be made to work on the opposite hand, but on most jobs it will require a large amount of overhang. The chassis is symmetrical; if necessary you can covert hand in the field, however this will VOID THE WARRANTY.

3. Operate the gate manually. The door must operate smoothly without any binding. Correct any problems with the gate before proceeding.

4. Mark a line on the car top corresponding to the centerline or the front edge of the gate track.

5. If the distance from the gate track centerline to the edge of the car top is more than 1 -1/8", there are two options: Shim out connecting arm (maximum recommended distance is 1/2"), or cut back the edge of the car top. If you need to cut back the car top, do so now - cut so there is 1-1/8" from the gate track centerline to the edge.

6. Place the operator on the cartop. Set the operator so the front edge is 1-1/8" (max) from the centerline or 9/16" (max) from the front edge of the gate track toward the inside of the car, and so the lead end is 3/4" past the gate strike . See Fig 1.

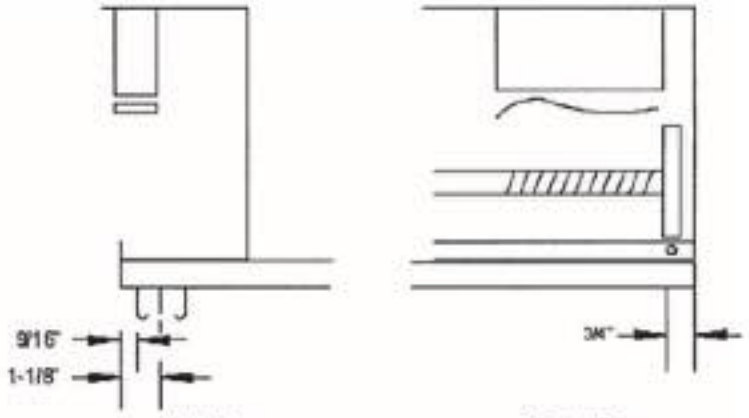

Fig. 1 Side View Front View

PATENT PENDING

PORTA Inc.
Porta Inc.
250 Hamilton Rd.
Arlington Heights,IL 60005
Phone: (847) 593-4900
Fax: (847) 593-1394
website: emiporta.com

KIS1OO-Accordion Gate Operator

Page 4

INSTALLATION - MECHANICAL (CON'T)

7. Pull the gate to its fully closed position. Check that the drive nut is about 1/2" away from the closed side pillow block; manually rotate the lead screw if necessary (it will be easier to rotate with the drive o-ring removed). Place the gate arm magnet on the magnet flag; the middle of the magnet should be in the middle of the flag. Check that the gate switch is closed, but still has about 1/4" of follow-up. See Fig 2.

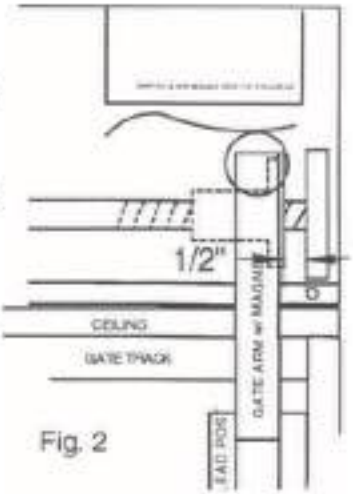

Fig. 2

8. The gate arm should line up with the gate lead post. If not, minor adjustments can be made by simply moving the gate arm magnet around on the flag. Large adjustments will require repositioning of the operator.

9. With the operator and gate arm in position, mark through the mounting holes for drilling the car top and the gate lead post.

10. Move the operator so you can drill 1/8" pilot holes in the cartop and 1/4" through holes in the gate lead post. BE CAREFUL NOT TO DRILL THROUGH THE CAR TOP IF THE HOLES WOULD BE VISIBLE.

11. Attach the operator to cartop. #12 x 3/4 screws are provided for wood cartops. Attach the gate arm with 1/4" -20 x 1 1/4" carriage bolts and acorn nuts. See Fig. 3

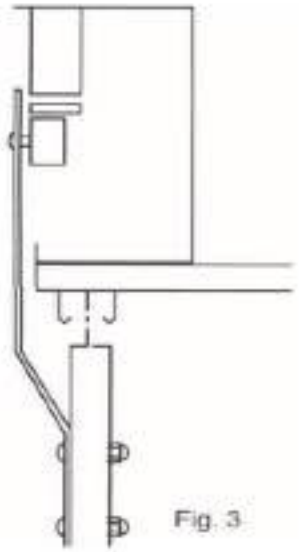
Fig. 3

12. Manually rotate the lead screw to open the gate about 1/2" from its fully closed position. Adjust the closed limit so that it "clicks" when the gate is about 1/4" from being fully closed; check by manually rotating lead screw.

13. Adjust the close slow down limit so that it is about 2" center-to-center from the closed limit.

14. Manually rotate the lead screw to about 1/2" from its fully open position. Adjust the open limit so that it "clicks" when the gate is about 1/4" from being fully open; check by manually rotating lead screw.

NOTE: LEAD SCREW ASSEMBLY IS SELF-LUBRICATING. LUBRICATION IS NOT RECOMMENDED.
NOTE: IF NEEDED, PETROLEUM JELLY CAN BE USED TO LUBRICATE THE GUIDE RAIL.

PATENT PENDING

PORTA Inc.
Porta Inc.
250 Hamilton Rd.
Arlington Heights,IL 60005
Phone: (847) 593-4900
Fax: (847) 593-1394
website: emiporta.com

Page 5

KIS1OO-Accordion Gate Operator

INSTALLATION - ELECTRICAL

1.The KIS100 is field wired including the gate switch if so equipped. Run field wires from operator through conduit or greenfield. 2-1/2" knockouts are provided in the chassis for an appropriate fitting.

2. Ground the chassis per code.

3. Verify power before connecting the operator.

4. Verify the type and voltage of control signal being used, refer to the Field Connection Diagrams.

5. There are 5 jumpers on the board:

SP1: Auto close; with this jumper installed the operator will automatically close when there is no signal to open. Remove if controller provides an independent close signal, or for testing and adjusting.

SP2-SP5: Are used to select the control signalization. Refer to the Field Connections

6. To test unit, set speed pots in the middle of their range. Then use on board toggle switch to open and close the operator. Adjust the speed control and limit switches as necessary.

7. Connect wiring from elevator controller to interface board. Reinstall SP1 if using only an open signal from the controller.

8. Test the unit for automatic operation and replace cover.

Field Connection Diagram

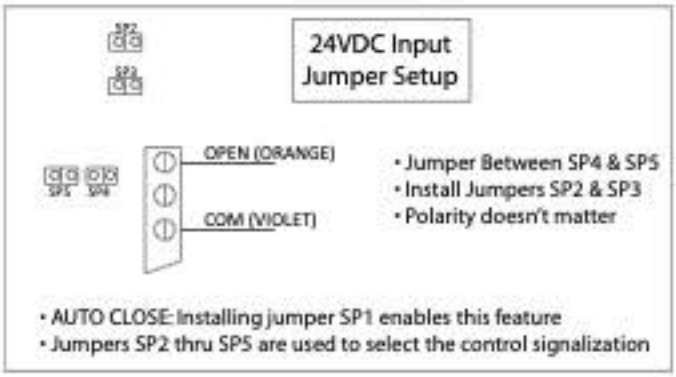

PATENT PENDING

PORTA inc.

Porta Inc.
250 Hamilton Rd.
Arlington Heights,IL 60005

Phone: (847) 593-4900
Fax: (847) 593-1394
website: emiporta.com

KIS1OO-Accordion Gate Operator

Page 6

Electrical Schematic

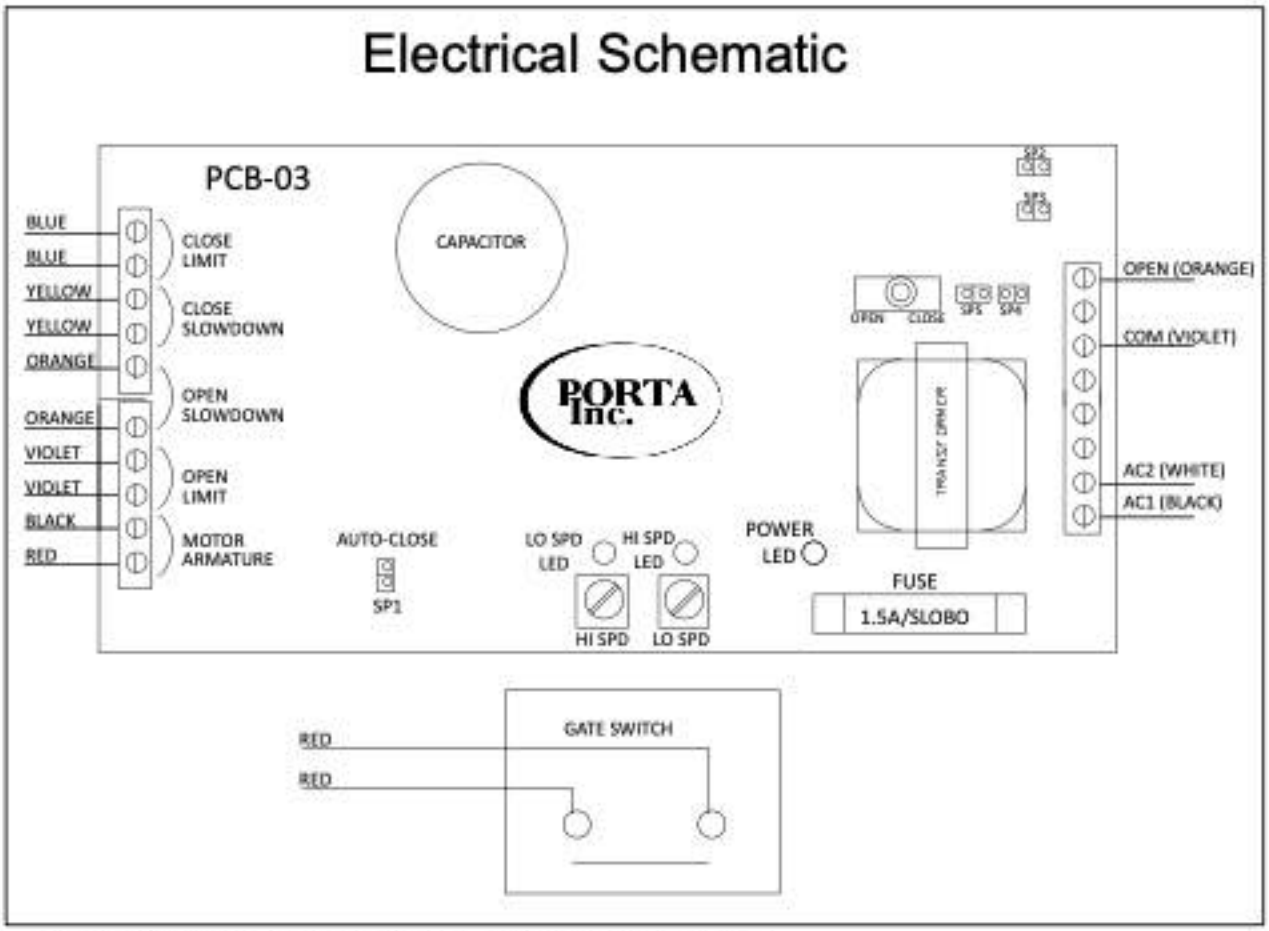

- AUTO CLOSE: Installing jumper SP1 enables this feature.
- Jumpers SP2 thru SP5 are used to select the control signalization.
- Factory jumper setup is for 12/24 VDC signalization and Auto Close enabled.

PATENT PENDING

Porta Inc.
250 Hamilton Rd.
Arlington Heights,IL 60005

Phone: (847) 593-4900
Fax: (847) 593-1394
website: emiporta.com

Page 7

KIS1OO-Accordion Gate Operator

TROUBLESHOOTING

Problem	Possible Cause	Corrective Action
No Function	No power	Verify 120VAC between "AC1" & "AC2".
	Fuse	Check Fuse "F1".
	Controller Signal	Check operation with test switch.
	Faulty Limit	Verify that limits are closed when not actuated.
No High Speed	Faulty Slow down	Verify that slowdowns are closed when not actuated.
No low speed	Slow down not actuating	Verify that the cam engages the slow down.
	Faulty Slow down	Verify that slowdowns have continuity when actuated.
Motor turns but no gate movement	Loose Pulleys	Verify that the drive and driven pulley's are tight on their shafts.
	O-Ring	Check for loose or missing o-ring.
	Gate	Check gate for excessive bind.
Reverse operation	Board wiring or controller wiring	Check operation with test switch
		DOWN is open. Swap M+ & M- if necessary.
Excessive breakaway force	Step 1	Put small washers on the magnets opposite the flag. If force is still excessive, go to step 2.
	Step 2	Remove a magnet. If force is still excessive, put small washers on the remaining magnet opposite the flag.
Board is powered but does not engage	Unit has stalled out	Step 1: Shut off power supply to unit Step 2: Identify and remove the cause of the stall. Step 3. Power unit back up.
Gate breaks away from operator	Magnet assembly has no pivot action.	Loosen lock nut (in ¼ turns) until magnet assembly pivots.

ATTENTION!

If the resistance to gate closure exceeds the magnetic coupler, the gate dis-engages from the operator and becomes a MANUAL GATE. Advise the user that they must do one of the following:

- Close the door manually to run the elevator
- Cycle the door to re-engage the magnetic coupler.

PATENT PENDING

PORTA Inc.

Porta Inc.
250 Hamilton Rd.
Arlington Heights,IL 60005

Phone: (847) 593-4900
Fax: (847) 593-1394
website: emiporta.com

Appendix G
Savaria Link Option

For information on the Savaria Link option, refer to the following document:

- Savaria Link Installation and Setup Guide, P/N 001180

Appendix H
RATH 2400 Installation and Operation

System Requirements

TELCO Voltage: 48-52vdc on an analog line with at least 25mA of line current and valid dial tone. Line must be dedicated for a 2400 Series phone.

Getting Started

Carefully open the shipping box and remove contents. Inspect the phones for damage. If there is any damage, call 800-451-1460 immediately to arrange corrective action.

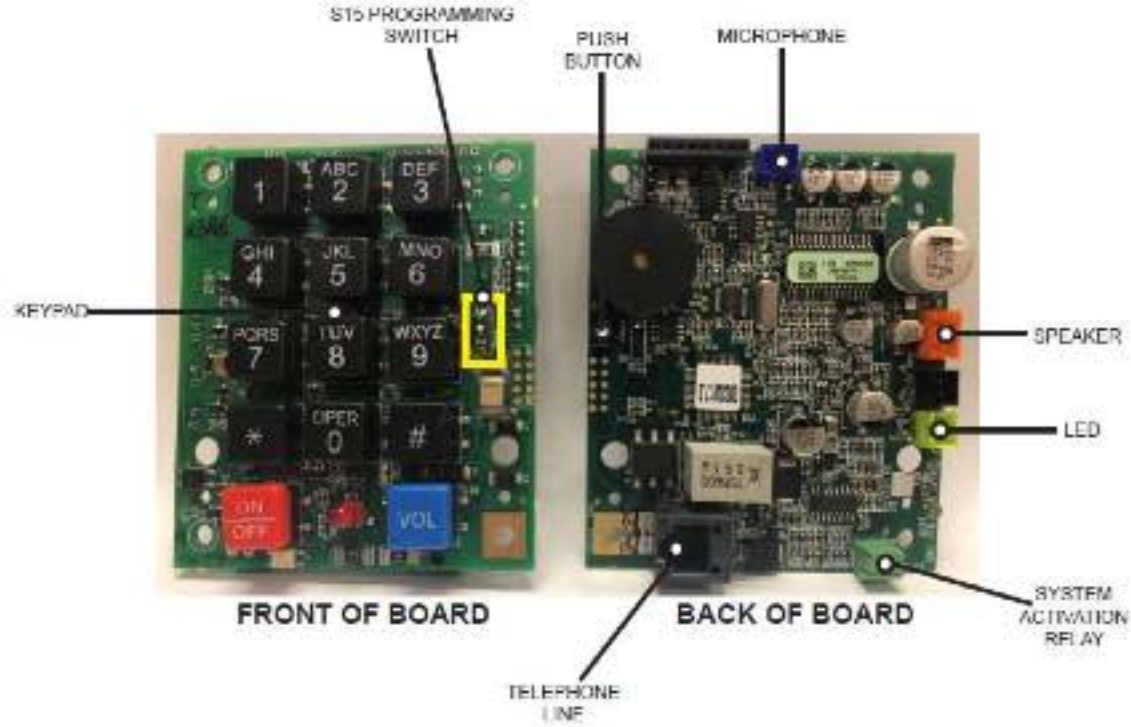

Line Connections

Connect a dedicated phone line to the RJ11 jack on the back of the 2400 Series phone board labeled TEL LINE using one of the following recommended methods:

1 Crimp the phone line on to the center pins of a standard RJ11 jack and plug into TEL LINE input on the back of the 2400 Series phone.

2 Connect the phone line to a female RJ11 jack then take the phone line cord provided with the 2400 Series phone from the jack to the TEL LINE input on the 2400 series phone.

3 Connect the phone line to a biscuit jack style connector. Screw the phone line onto red and green terminals on the back of the biscuit jack. Take the phone line cord provided with the 2400 Series phone from the biscuit jack to the TEL LINE input on the back of the 2400 Series phone.

RATH® phones use the center pins of the RJ11 (red and green) for the outside phone line. Phone is not polarity sensitive.
Note: Do not cut off the end of the phone line cord and splice the phone line directly onto the line cord.

It is recommended that the wiring used inside the traveling cable or horizontal cabling is a 20 - 22 AWG twisted shielded pair with the shield grounded at the elevator controller end only. This will help reduce or eliminate any possible interference.

The phone line can be checked through the 2400 Series phone by pressing the **ON/OFF** button on the keypad. After pushing the **ON/OFF** button, the phone should have dial tone. Once the phone has dial tone, use the keypad to dial a number. Verify that the call connects and has two-way communication. Press the **ON/OFF** button again to end the call.

Quick Set-up

RATH® 2400 Series phones can only be programmed using the onboard keypad. When programming 2400 Series phones, it is imperative to move quickly through the programming due to many Telco systems providing limited off-hook time.

Program Number

1 Press the **ON/OFF** button (phone should give a dial tone)
2 Slide the S15 switch down into "ON/PROGRAM" position
3 Press **1, *,** the number you want the phone to dial, blue **VOL** key

Program Message

1 Press **7, *, 2** for message to play twice
2 Press **4, *** (phone will start beeping), speak message when beep ends, press blue **VOL** key when finished speaking (message will playback automatically)
3 Slide S15 switch back up into "1" position
4 Press the **ON/OFF** button to turn the phone off

Detailed Programming

Programming Primary Phone Number:

1 Press the **ON/OFF** button (phone should give a dial tone)
2 Slide the S15 switch down into "ON/PROGRAM" position
3 Press **1, *,** the number you want the phone to dial, blue **VOL** key
4 Slide the S15 switch back up into "1" position
5 Press the **ON/OFF** button to turn the phone off

Note: In situations where a delay is needed, such as needing an 8 or 9 to dial out, use the **ON/OFF** button on the keypad for a pause. The button can be pressed multiple times for more of a delay. One PAUSE = 1 second.

Programming Secondary Phone Number:

1 Press the **ON/OFF** button (phone should give a dial tone)
2 Slide the S15 switch down into "ON/PROGRAM" position
3 Press **2, *,** the number you want the phone to dial, blue **VOL** key
4 Slide the S15 switch back up into "1" position
5 Press the ON/OFF button to turn the phone off

Note: In situations where a delay is needed, such as needing an 8 or 9 to dial out, use the **ON/OFF** button on thekeypad for a pause. The button can be pressed multiple times for more of a delay. One PAUSE = 1 second.

Programming Location Message:

RATH® phones can play a location message when the call is answered. This feature is used when the phone iscalling a phone number that cannot identify where the call is coming from by caller ID, or needs more location information than caller ID can provide. This feature is turned on by default. Perform the following steps to program the location message feature.

Turning Location Message ON:

1 Press the ON/OFF button (phone should give a dial tone)
2 Slide the S15 switch down into "ON/PROGRAM" position
3 Press **7, *, (1, 2, or 3)** (1 will play message once, 2 will play message twice, 3 will play message on a loop until the operator presses the **#** key 4 times)
4 Press **4, *** (phone will start beeping), speak message when beep ends, press blue **VOL** key when finished speaking (message will playback automatically)
5 Slide S15 switch back up into "1" position
6 Press the ON/OFF button to turn the phone off

Turning Location Message OFF:

1 Press the **ON/OFF** button (phone should give a dial tone)
2 Slide the S15 switch down into "ON/PROGRAM" position
3 Press **7, *, 0**
4 Slide the S15 switch back up into "1" position
5 Press the **ON/OFF** button to turn the phone off

Note: The answering party can replay the message anytime by pressing ***, ***.

Resetting the Phone:

The phone can be reset by performing the following steps:
1 Press the **ON/OFF** button (phone should give a dial tone)
2 Slide the S15 switch down into "ON/PROGRAM" position
3 Press **9, *, 7, 2, 8, 4**
4 Press **5, *, 1**
5 Slide the S15 switch back up into "1" position
6 Press the **ON/OFF** button to turn the phone off

Note: Resetting the phone will not clear out any programmed numbers or messages.

Programming Talk Timer:

Talk Time is the amount of time that two-way communication will occur after a call is answered. When Talk Time expires, the phone will hang up and the button on the phone will need to be pushed again to re-establish a call.
1 Press the **ON/OFF** button (phone should give a dial tone)
2 Slide the S15 switch down into "ON/PROGRAM" position
3 Press **6, *,** 3 digit number in minutes (3 minutes = 003, 20 minutes = 020)
4 Slide the S15 switch back up into "1" position
5 Press the **ON/OFF** button to turn the phone off

Note: The lowest Talk Time can be set to is 1 minute. The longest is 999 minutes.

Programming Auto Answer:

Auto Answer allows the 2400 Series phone to answer if called without someone needing to push the call button.This feature is required by code. By default, all 2400 Series phones are manufactured with Auto Answer enabled.This feature should only be turned off in a home or private elevator application.
1 Press the **ON/OFF** button (phone should give a dial tone)
2 Slide the S15 switch down into "ON/PROGRAM" position
3 Press **8, *, 1 or 2** (1 is ON, 2 is OFF)
4 Slide the S15 switch back up into "1" position
5 Press the **ON/OFF** button to turn the phone off

Volume Adjustment:

If the voice of the person you call is not loud enough in the phone speaker, increase the volume by pressing the ON/OFF button. When the phone has dial tone, press the blue VOL button. Each time you push the VOL button, the volume will go up or down one level. 2400 Series phones have three volume levels: high, medium, and low.When desired volume level is reached, push the ON/OFF button to save the change.

Troubleshooting

Phone will not let you get through programming:

- Program the phone while it is on an active call:

1 Press the **ON/OFF** button
2 Call your cell phone number and answer the call
3 Slide the S15 switch down to "ON/PROGRAM" position
4 Perform the desired programming steps on the 2400 Series phone keypad
5 Slide the S15 switch back to "1" position
6 Press the **ON/OFF** button on the 2400 Series phone (this will also hang up the call on your cell phone)

- Verify the voltage on the phone line meets the minimum needed for the phone. See the "System Requirements" section for voltage range.
- Exit programming mode and re-enter. Attempt programming steps again.

Phone does not call out:

- Verify the voltage on phone line and dial tone. Phone lines can have voltage but no dial tone. 2400 Series phones must have dial tone or a valid ring down circuit to call out properly.
- Verify the push button is connected to the "PANIC" connector on the back of the circuit board.
- Remove the push button from the black "PANIC" connector on the circuit board. Use a small piece of wire or a small screwdriver to short 2 pins inside of the connector on the circuit board. If the phone calls out after shorting pins on the circuit board, there is a problem with the push button.
- Double check the number being programmed into the 2400 Series phone. Verify the phone line doesn't require an access digit such as an 8 or 9 to dial out or have any line restrictions such as long distance or toll restriction.
- Verify the phone line going into the 2400 Series phone is dedicated. 2400 Series phones cannot share a phone line with anything other than another 2400 Series phone.
- Verify phone is in Standard Mode. See "Resetting the Phone" section for instructions.

Phone does not hang up:

- 2400 Series phones require either a CPC or Open-Loop Disconnect Signal provided by the phone line to properly disconnect. This is a setting on the line that the phone provider should be able to supply.
- Before the receiving party hangs up the call, they can press ***, #** to disconnect.
- Lower the Talk Time on the phone. This will not hang up the phone instantly, but it will lower the amount of time the phone will stay off-hook. See the "Detailed Programming" section for instructions.

Phone hangs up after the call is answered:

- Phone may be in the wrong mode. Verify the phone is in Standard Mode. See "Resetting the Phone" section for instructions.
- There may be excessive noise on the phone line. Connect an analog phone to the line and place a call out. Listen for any interference (buzzing, humming, etc.) on the line. If any noise is heard, the phone line must be cleaned up.
- Verify the phone line going into the 2400 Series phone is dedicated. 2400 Series phones cannot share a phone line with anything other than another 2400 Series phone.

Phone volume is too low:

- The volume level on the phone may need to be increased. See the "Volume Adjustment" section for instructions.
- Line voltage and line current on the phone may be too low. See the "System Requirements" section for the appropriate range.
- Verify the speaker is lined up with the holes on the panel and is not blocked.
- Verify the microphone is lined up with the holes on the panel and is not blocked.

Infinity & Infinity HD (with Micro-6 Controller)

INSTALLATION GUIDE

Part No. 000838, Rev. 054
© Copyright 2024

Savaria Concord Lifts, Inc.
www.savaria.com

Support
2 Walker Drive
Brampton, Ontario, L6T 5E1, Canada
Toll free: (800) 791-7999
Fax: (905) 791-2222

savaria