Position ring beam (with levelling brackets attached) in the aperture.

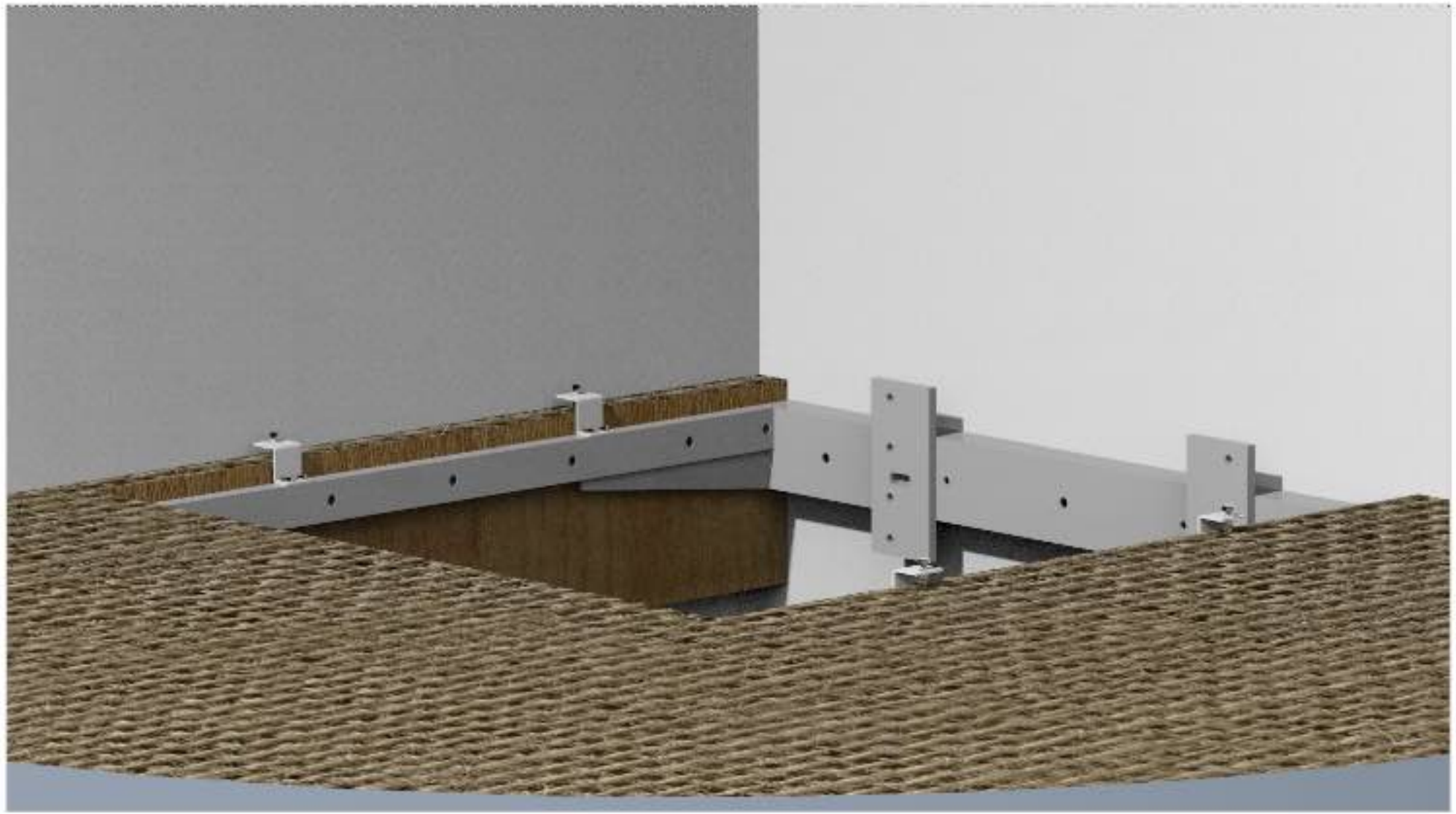

Adjust the levelling brackets to set the ring beam 25mm below finished floor so track plates are plumb.



Optional ring beam fixings into rear wall - Please refer to **25900954** for loading implication.
Drill ϕ8 x 100mm into rear wall and fix using 3-off M10x8x100 Ankerbolts.

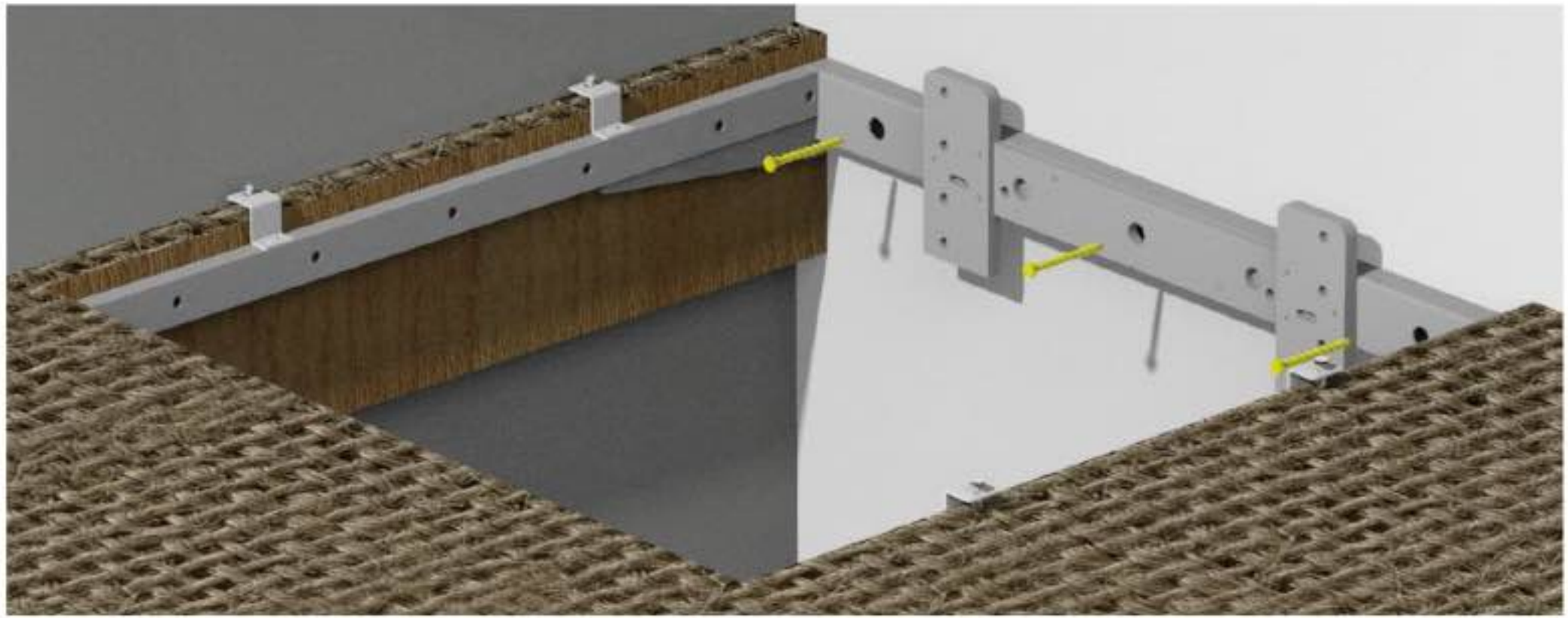

Pack ring beam with hardboard/formica and fix using #5x70 woodscrew (16 places).

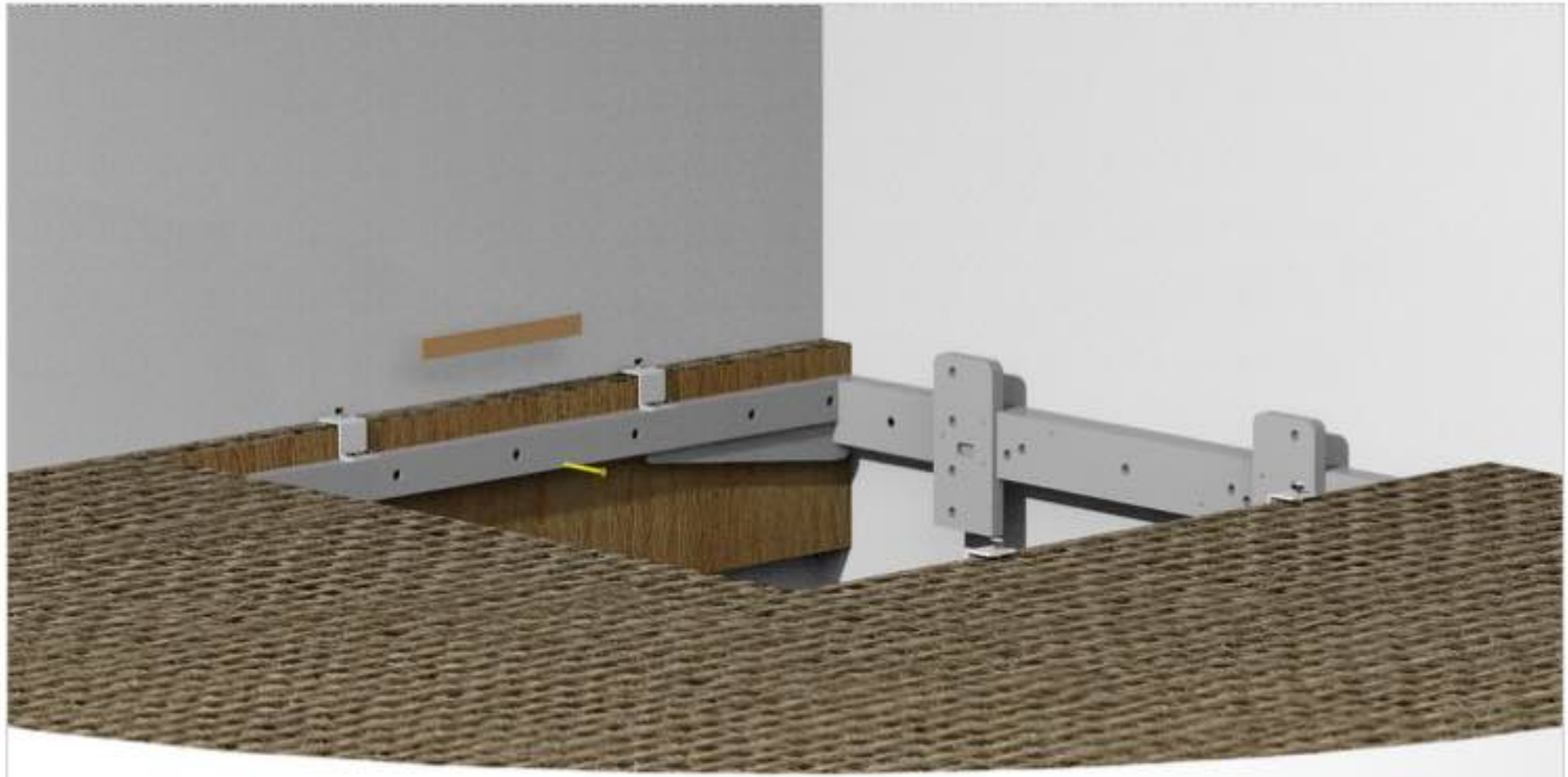

Fix the wooden batons 27mm above finished ceiling using #5x80 woodscrew (16 places) ensuring they are packed to align with inside edge of ring beam.

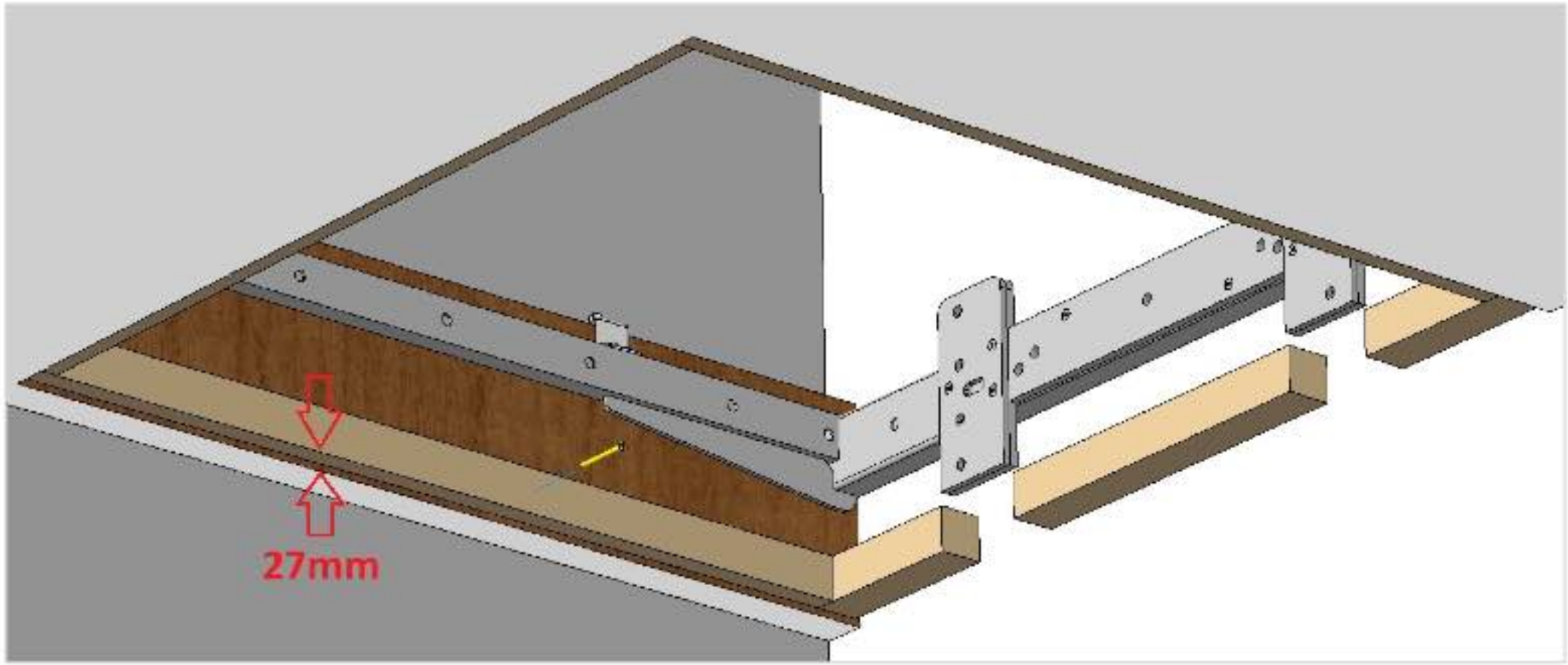

Press the lower liner into the wooden frame and fix using #4x25 woodscrew (12 places).

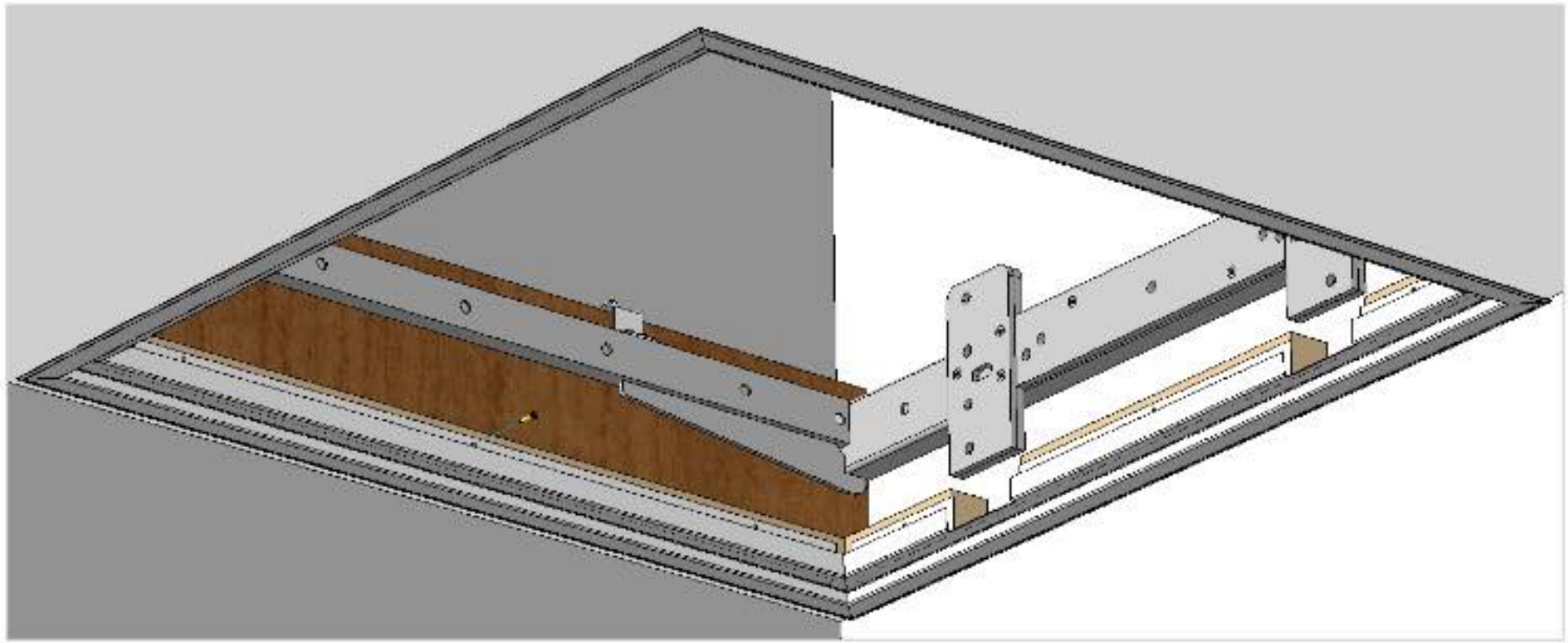

Remove the levelling brackets. Fit and mark the masterboard to the top of the ring beam. Cut masterboard 3mm smaller than mark. Locate all six pieces into the lower liner.

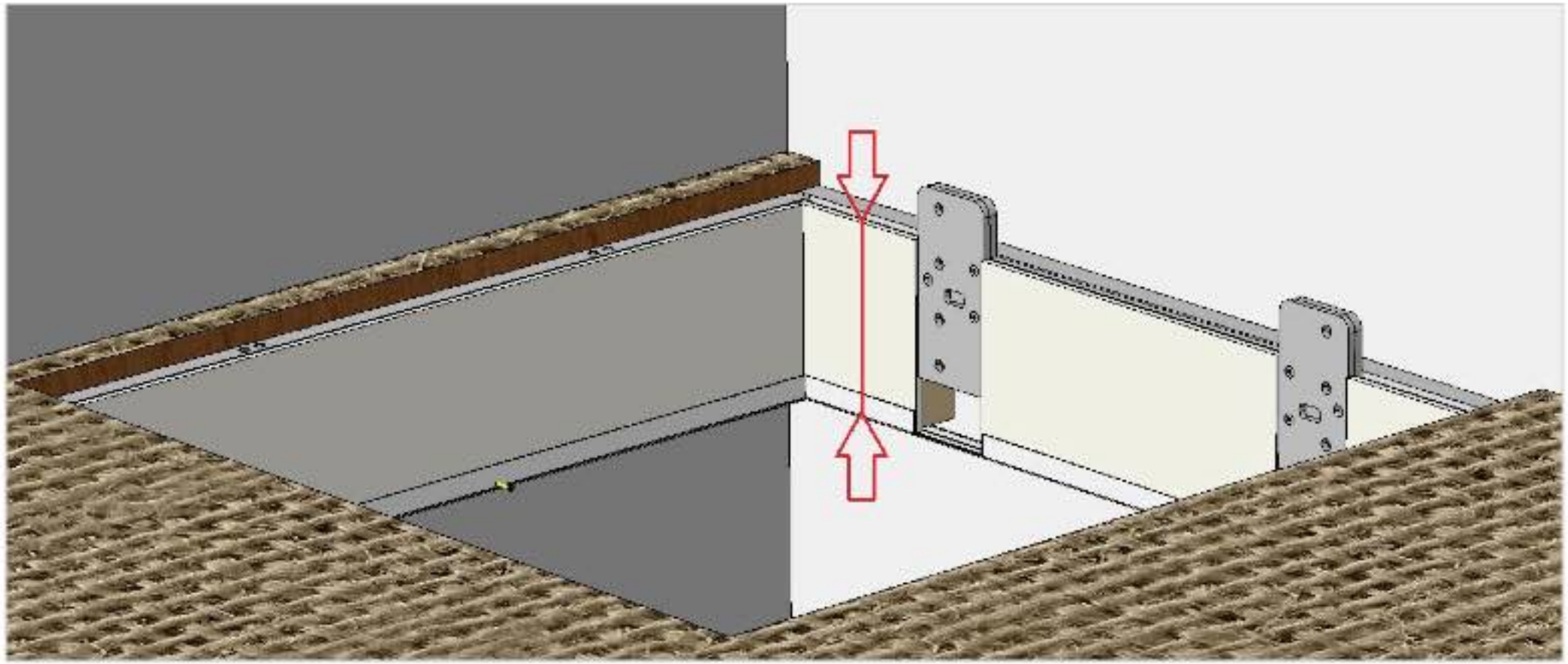

Press the upper liner into the ring beam to locate the masterboard. Drill through each fixing point into the ring beam with a ϕ3.2mm drill. Fix the upper liner using #10x1 self tapping screws (12 places).

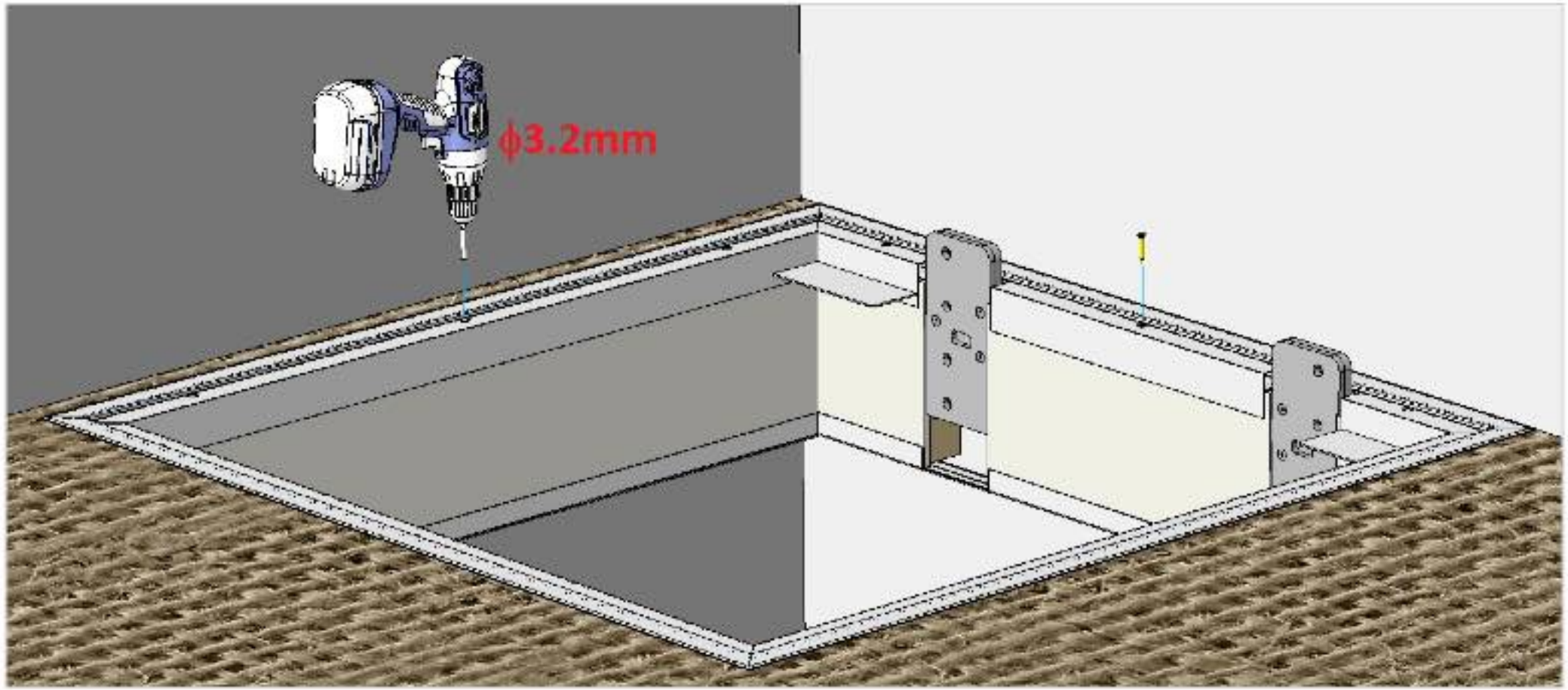

Seal all joints around the aperture using fire sealant and fit f11mm hole plugs (12 places).

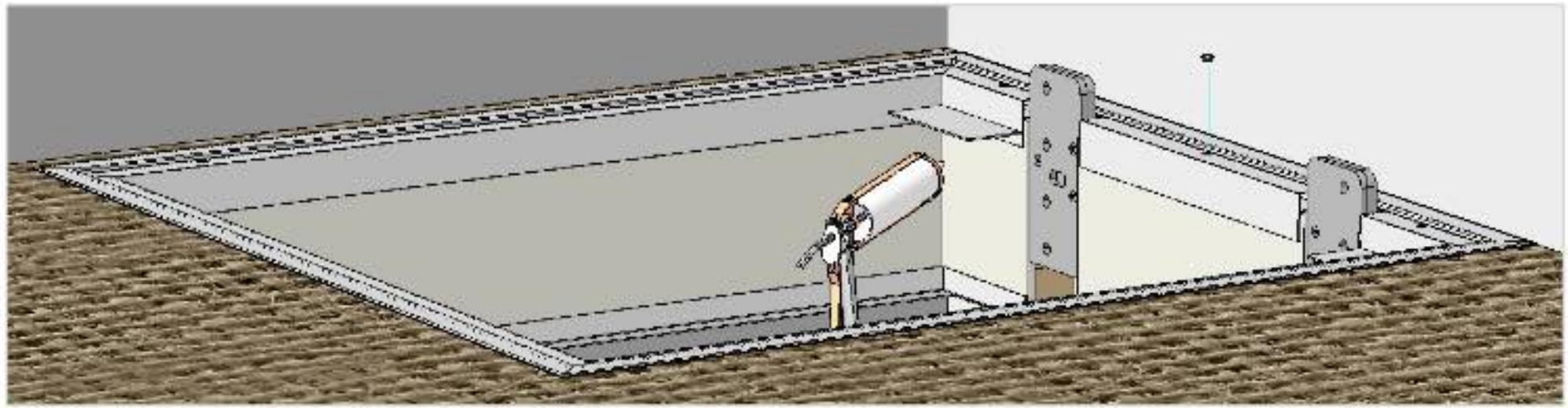

Measure from the bottom edge of the rectangular hole to the lower floor on each side. Cut the lower rails to these measurements.

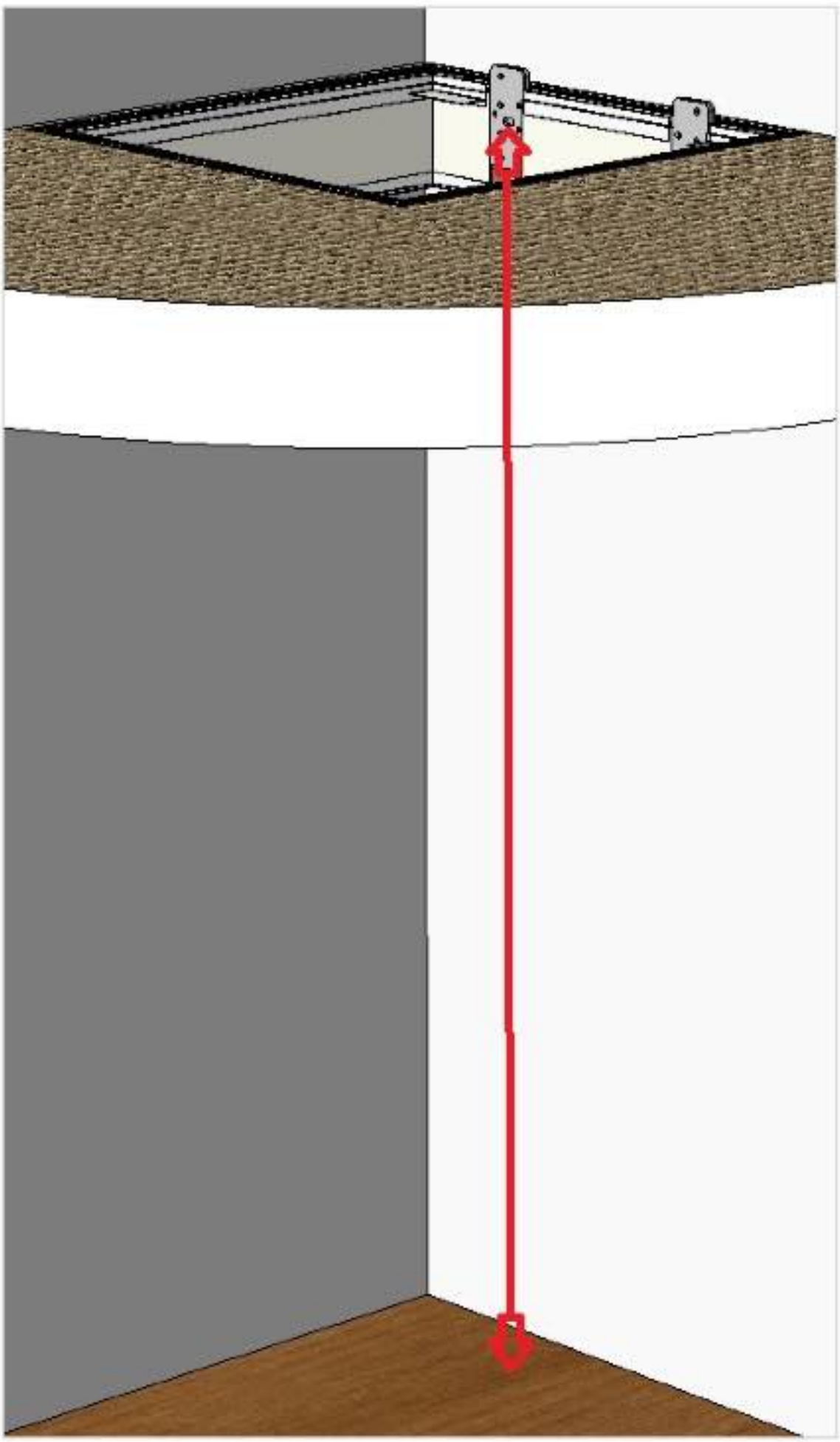

Drill a ϕ11 hole through each rail (30mm up/31mm in). Fix the tiebars to the rails using M8x50 cap socket bolts (8 places). Fix the base plate to the rails using M10x30 button socket bolts and M10 self-locking nuts (2 places). [Loosely tighten only].

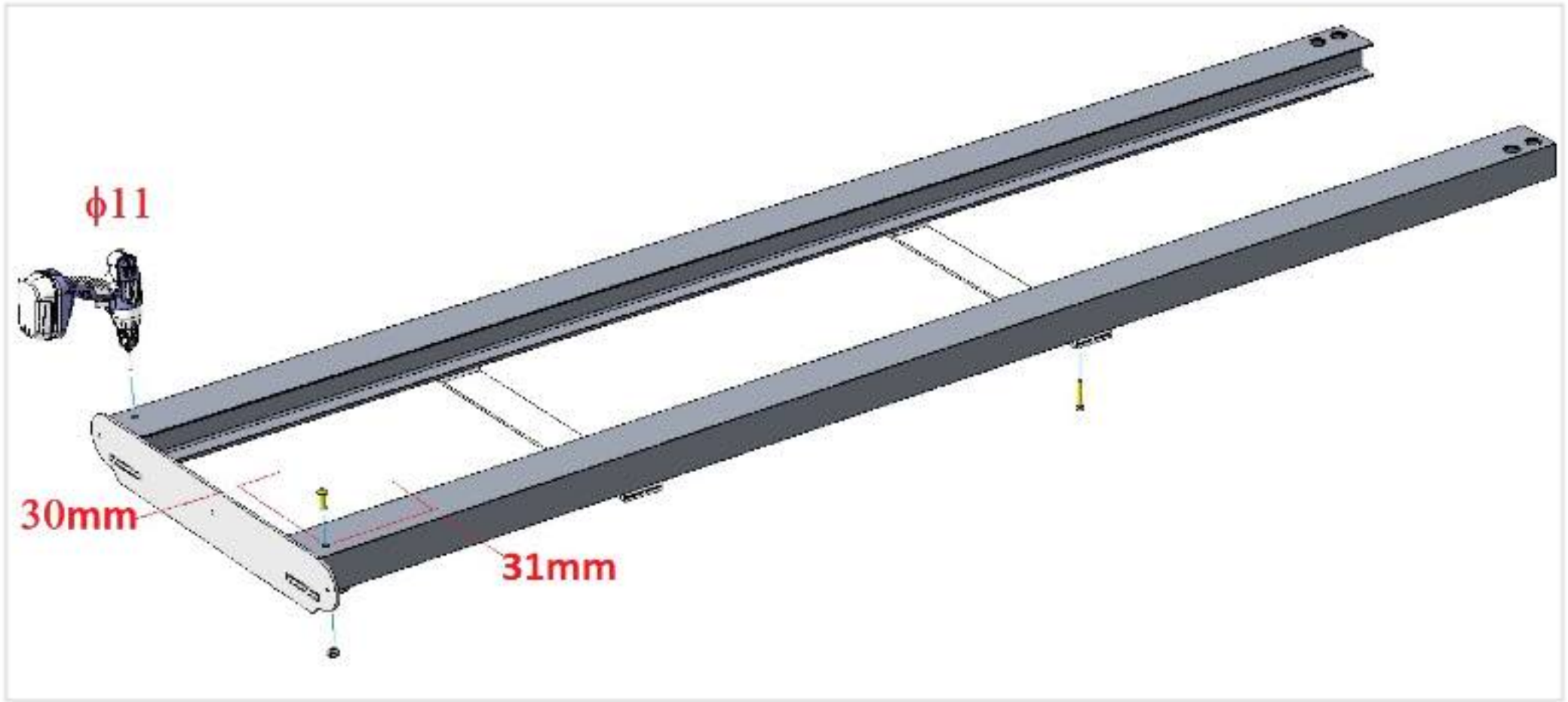

Attach rails to ring beam using M10x30 button socket bolts (4 places). Using a laser level adjust baseplate to plumb rails and fix to floor with #5x60 woodscrew (3 places). Fully tighten all fixings.

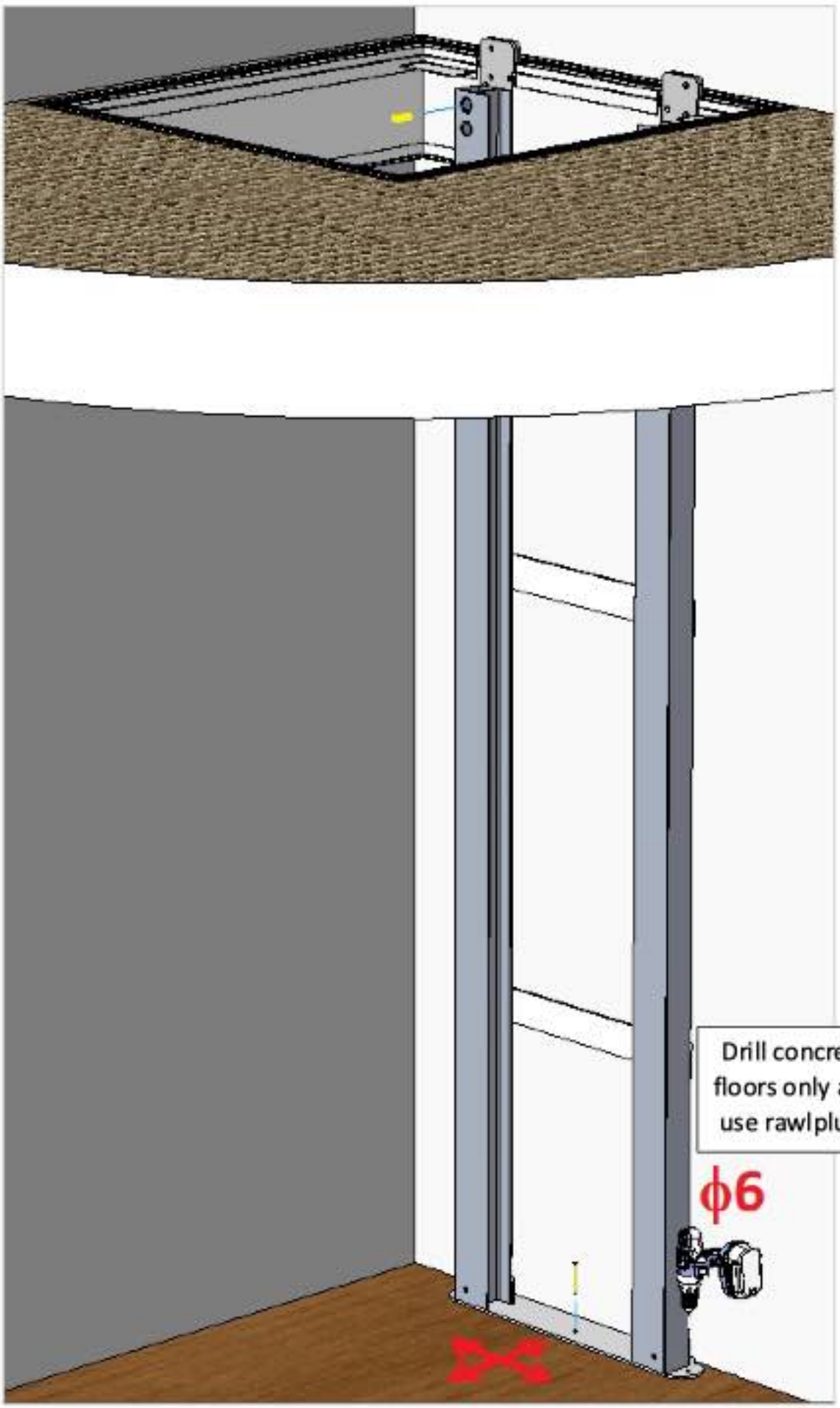

Measure from the top of the lower tracks to the upper ceiling on each side. Cut the upper rails to these measurements. Using a laser level mark the front face, left side and right side of the ring beam plates on the upper ceiling. Locate the joists relative to these marks and note their positions.

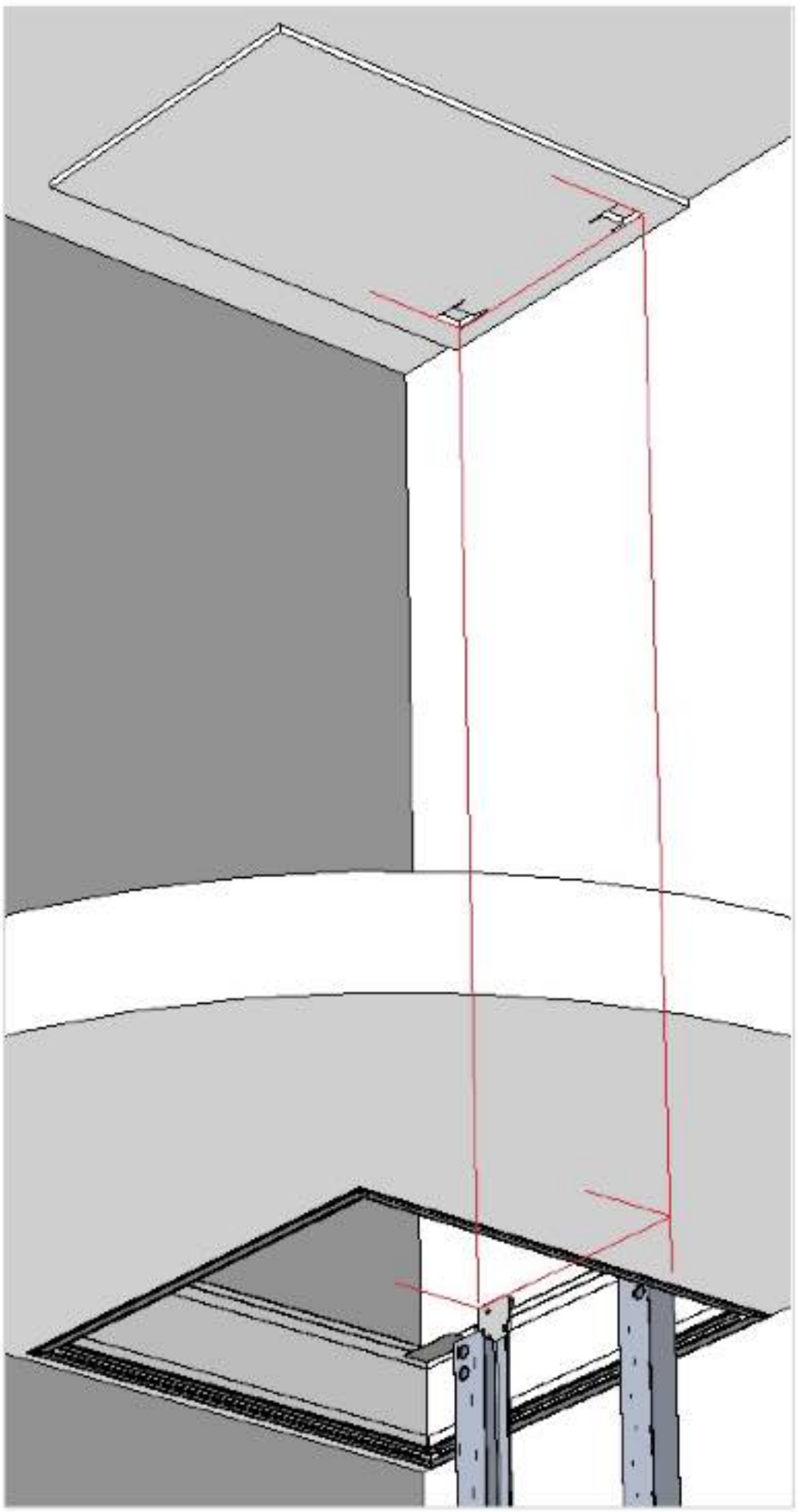

Mark the joist positions on the back of the spreader board and drill 12-off equi-spaced holes. Position the spreader to the marks on the ceiling and fix using #5x100 woodscrews (4 corners only).

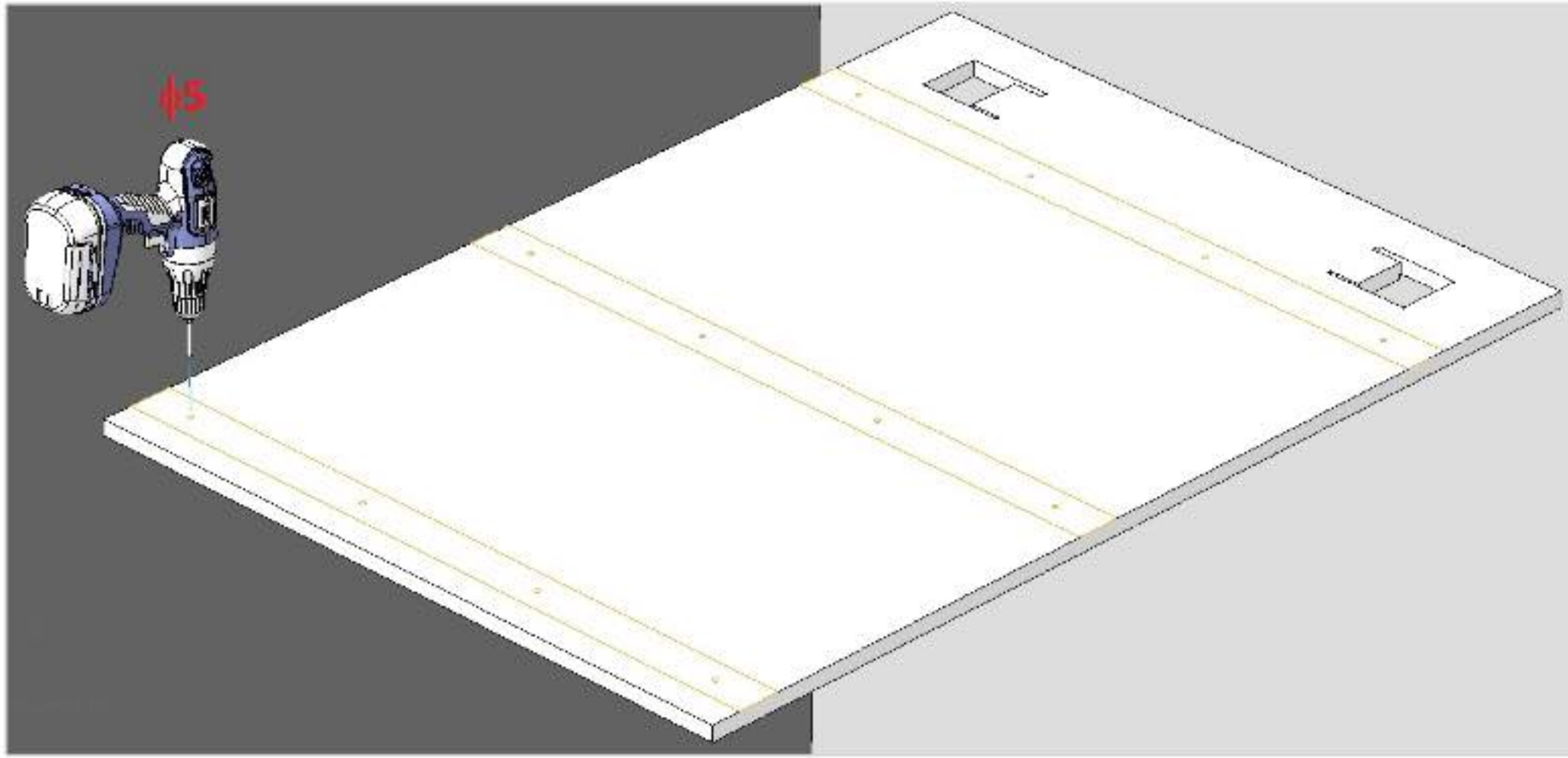

Locate each rail into the spreader board and fix to ring beam using M10x30 button socket bolts (4 places). Check rails for plumb, adjust spreader if necessary and insert remaining #5x100 woodscrews (8 places).

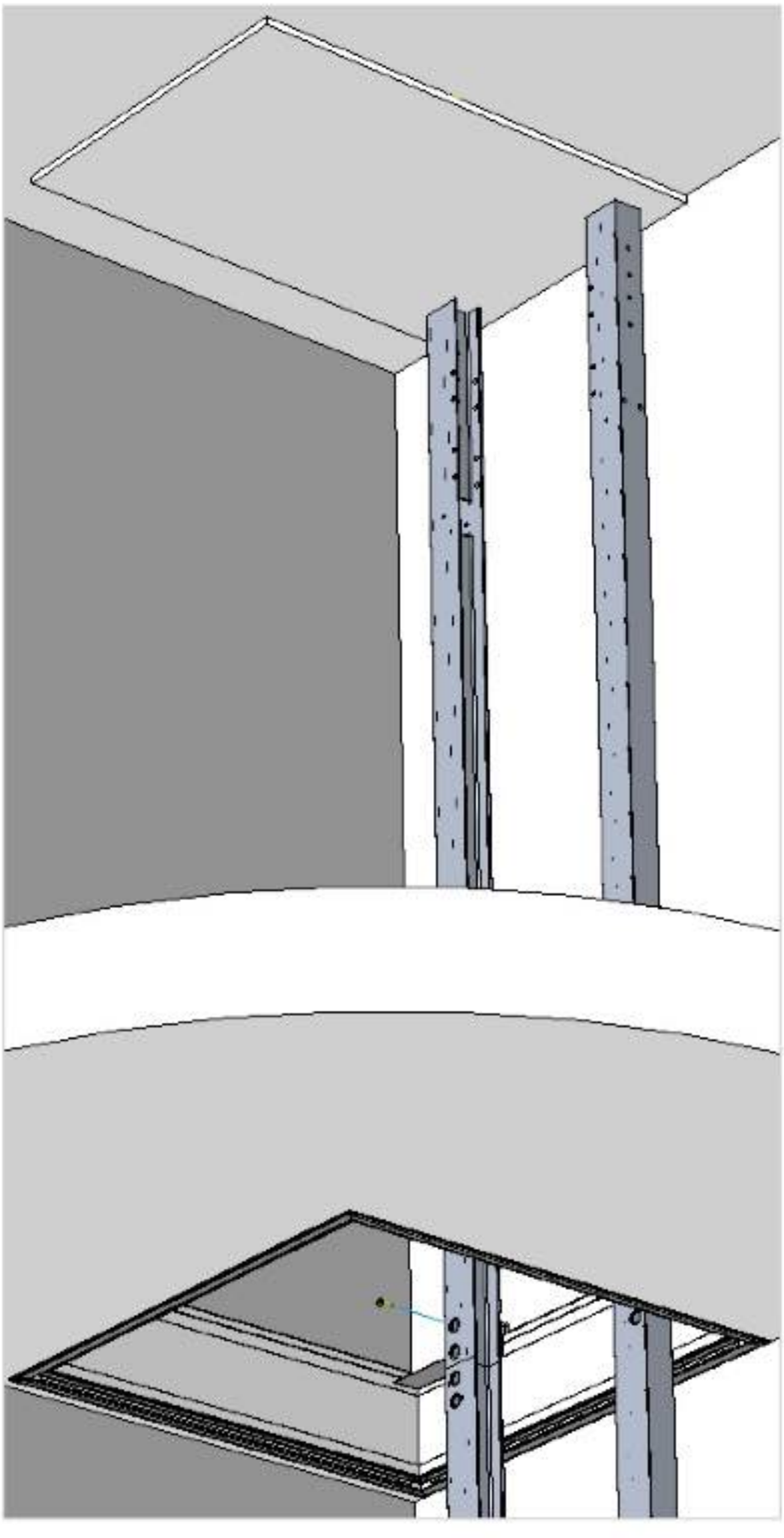

Attach the hoist brackets to the highest hole on the upper rails using M10x80 hex bolts and M10 nyloc nuts (2 places).

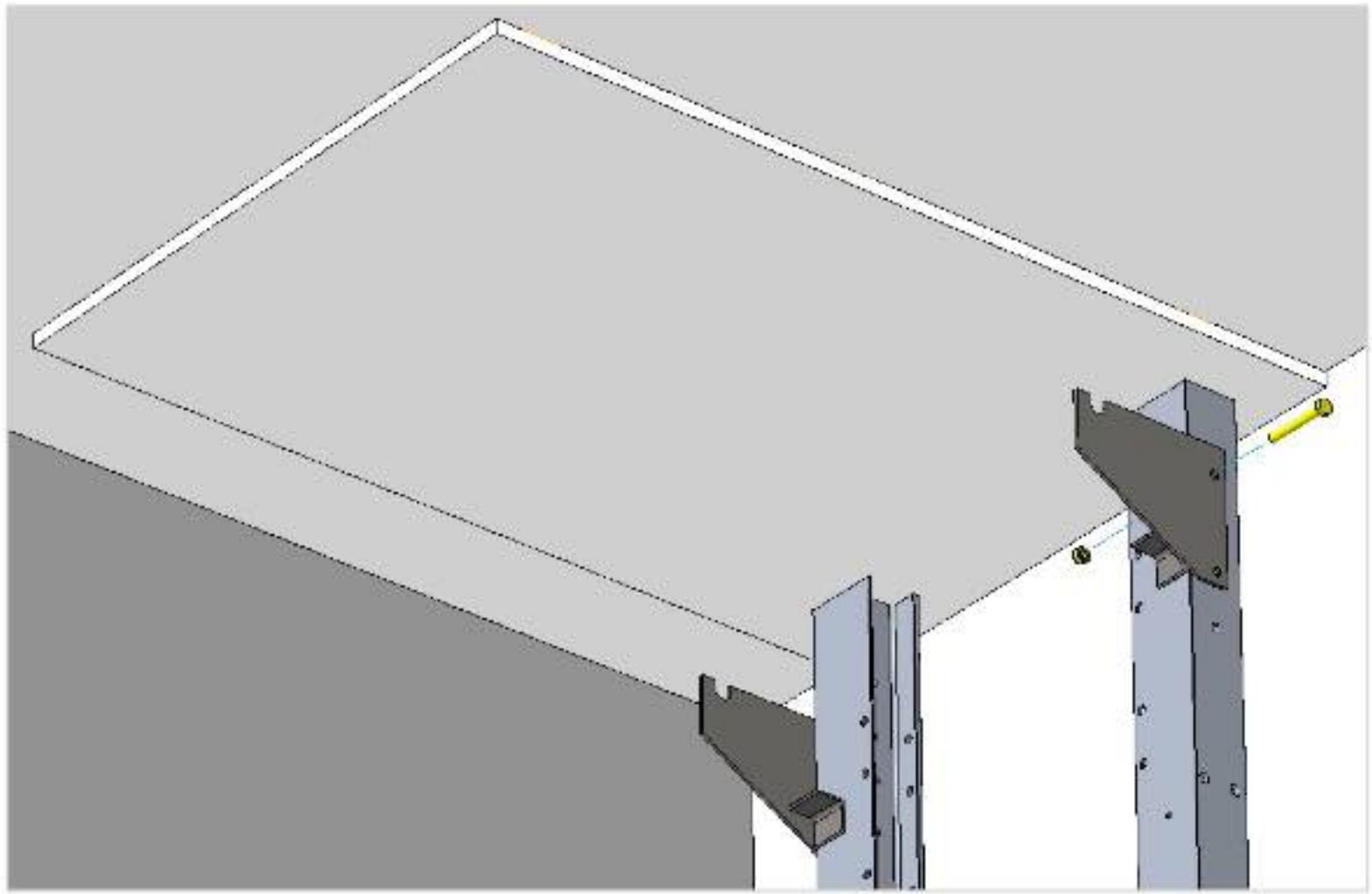

Position the motor mount between the rails by removing and replacing one of the guides. Remove bolted end of the hoist bar, feed rod through rope eyes and refit bolted end.

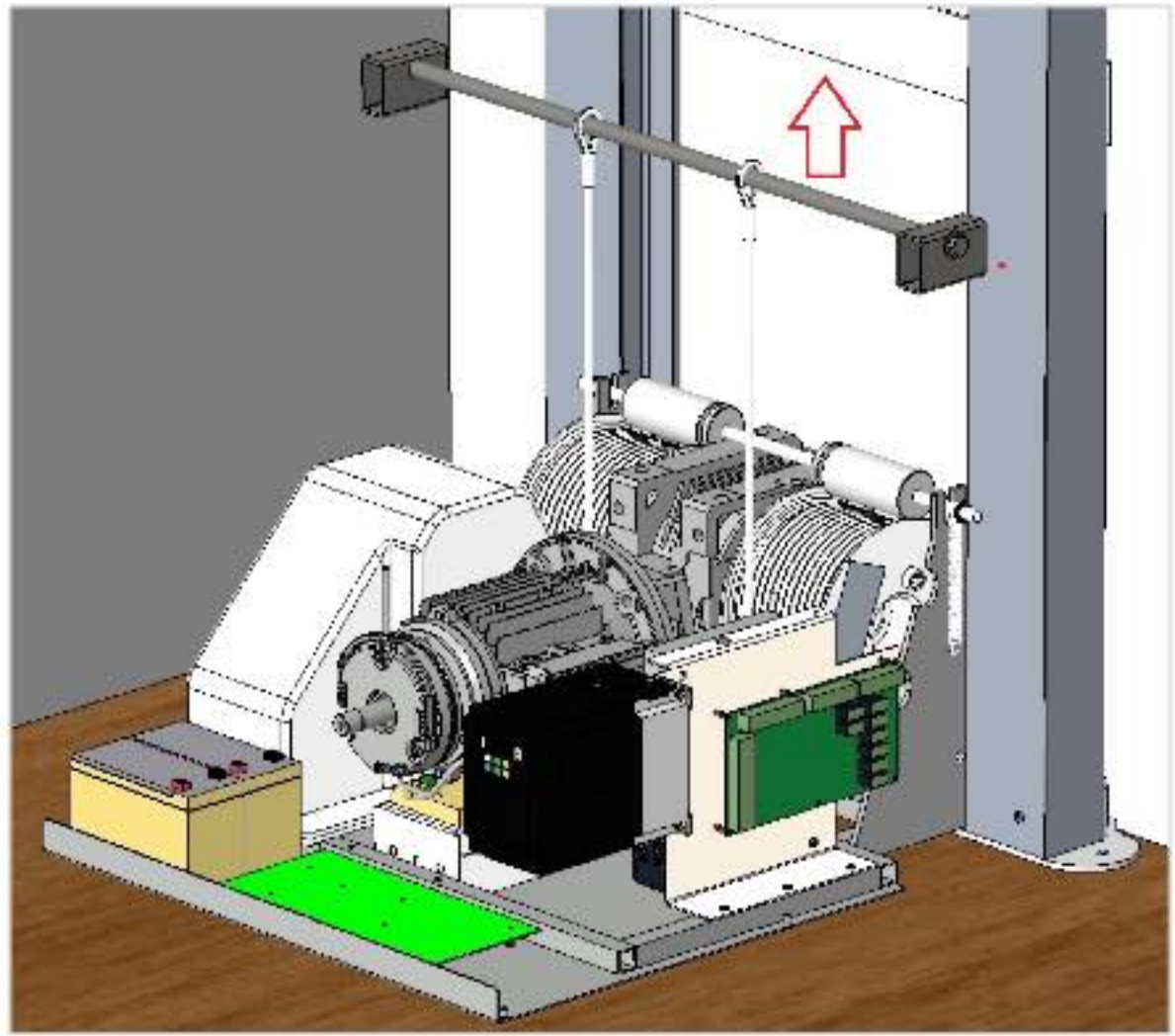

Handbox Connection

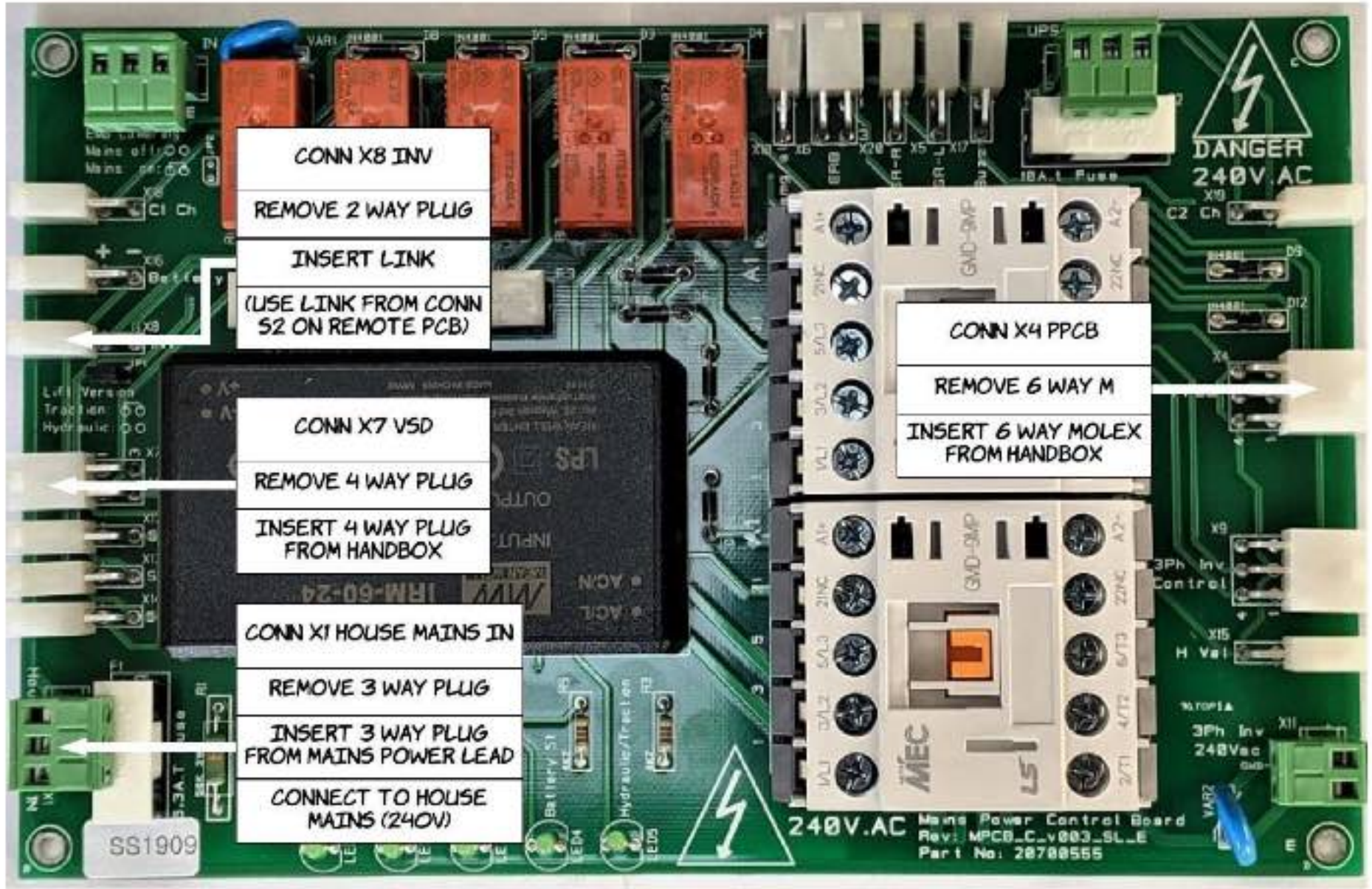

WARNING ! CRUSHING HAZARD - ALL SAFETY FEATURES DISABLED DURING HANDBOX OPERATION

Raise the mount so the guides align with the highest set of holes the rails. Secure the mount in place using M10x90 hex bolt, washer and M10 self-locking nut (4 places). Remove and retain the hoist bar and brackets.

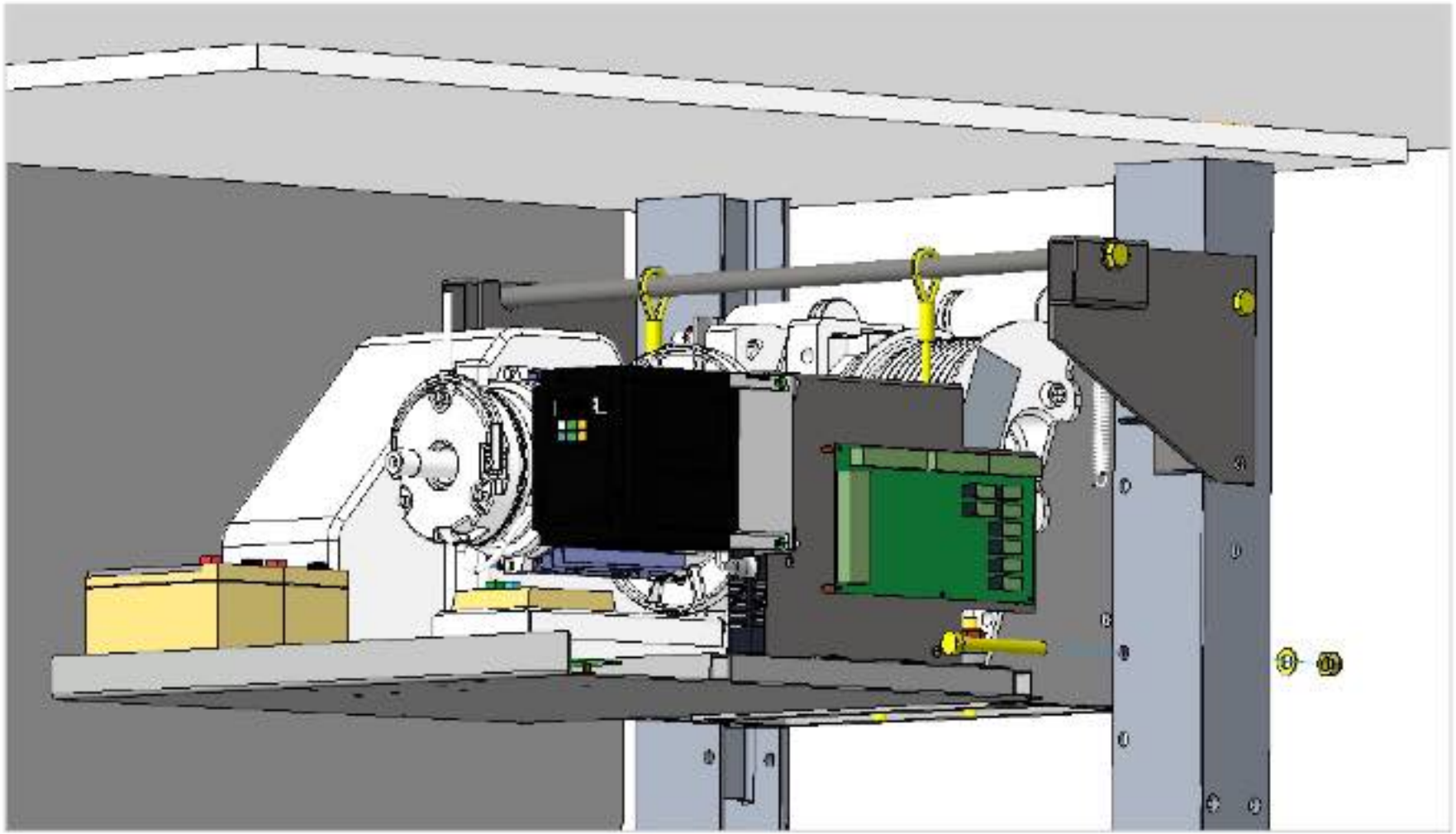

Locate the trapdoor into the upper liner. Centre the rail seal bracket between the rails with the intumescent blocks to the underside and fix to the trapdoor using #4x25 woodscrews (6 places). Cut the carpet or lino to size and bond to the trapdoor.

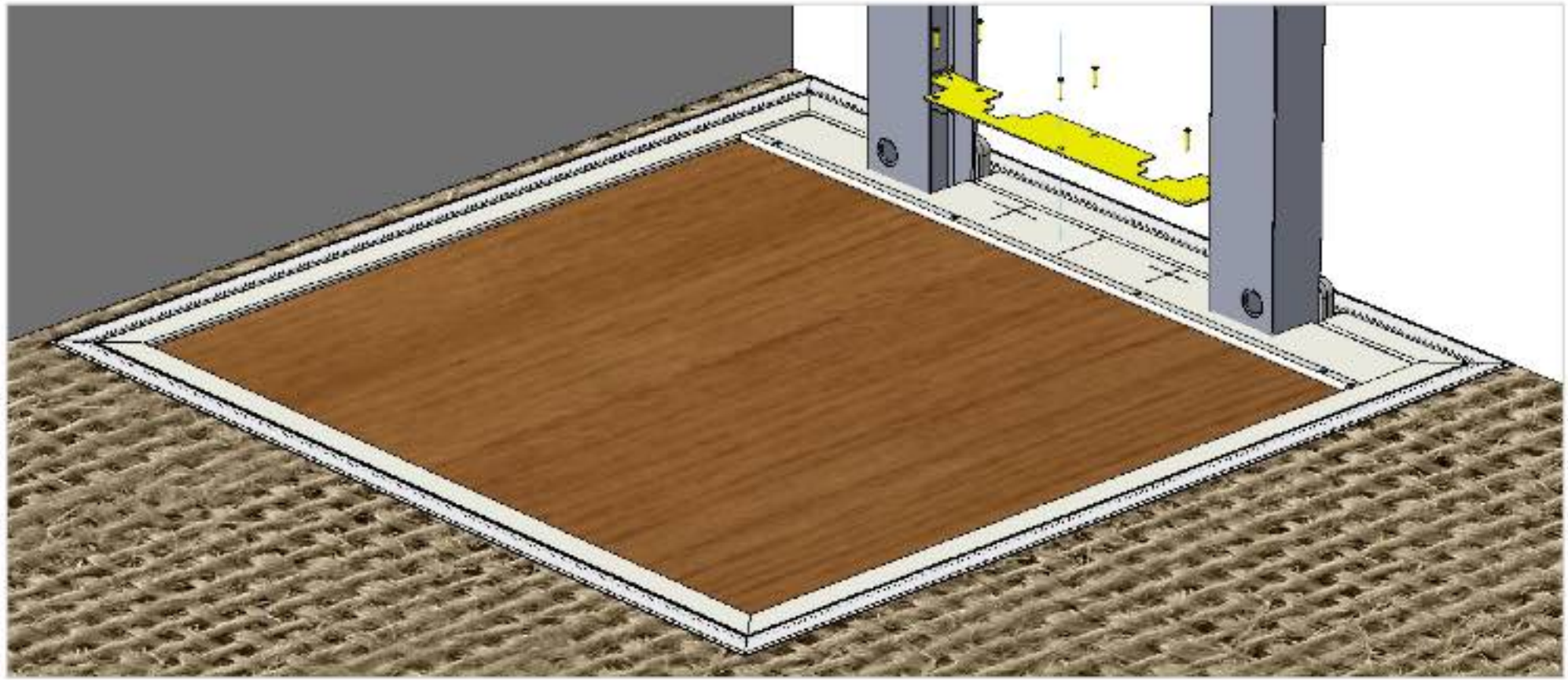

Connect the mains cable from the EMC filter to a 13amp fused spur adjacent to the motor mount.

WARNING: MAINS CONNECTION

MUST BE COMPLETED BY A QUALIFIED ELECTRICIAN

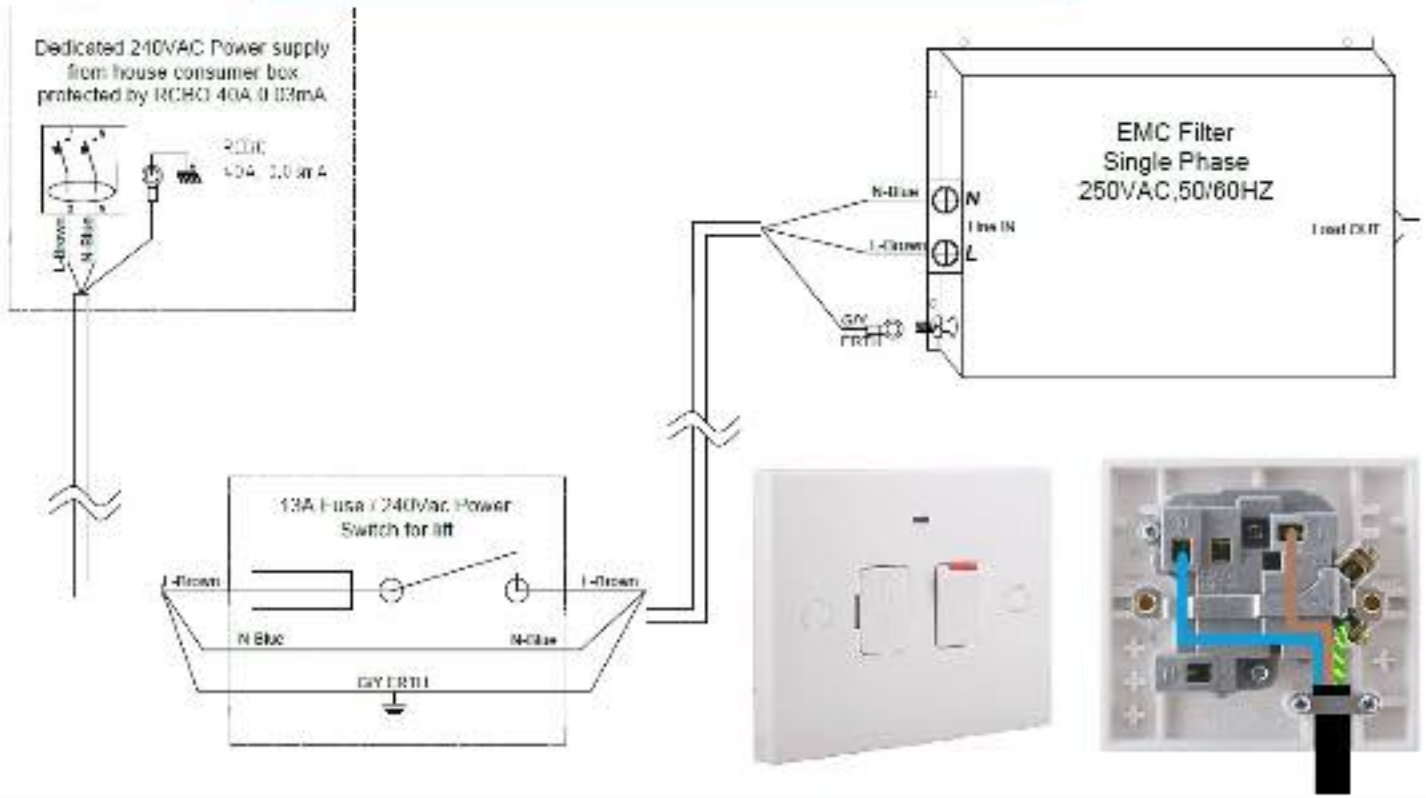

Clamp off 1.75m of cable using the clamp in the machined pocket under the motor. Feed the ends up between the rail and the motor guides and cable tie along the bar on the back of the motor. At the centreline drop the cables down under the motor and route to the Remote PCB.
Fit the rail pulleys and pins and secure with circlips.

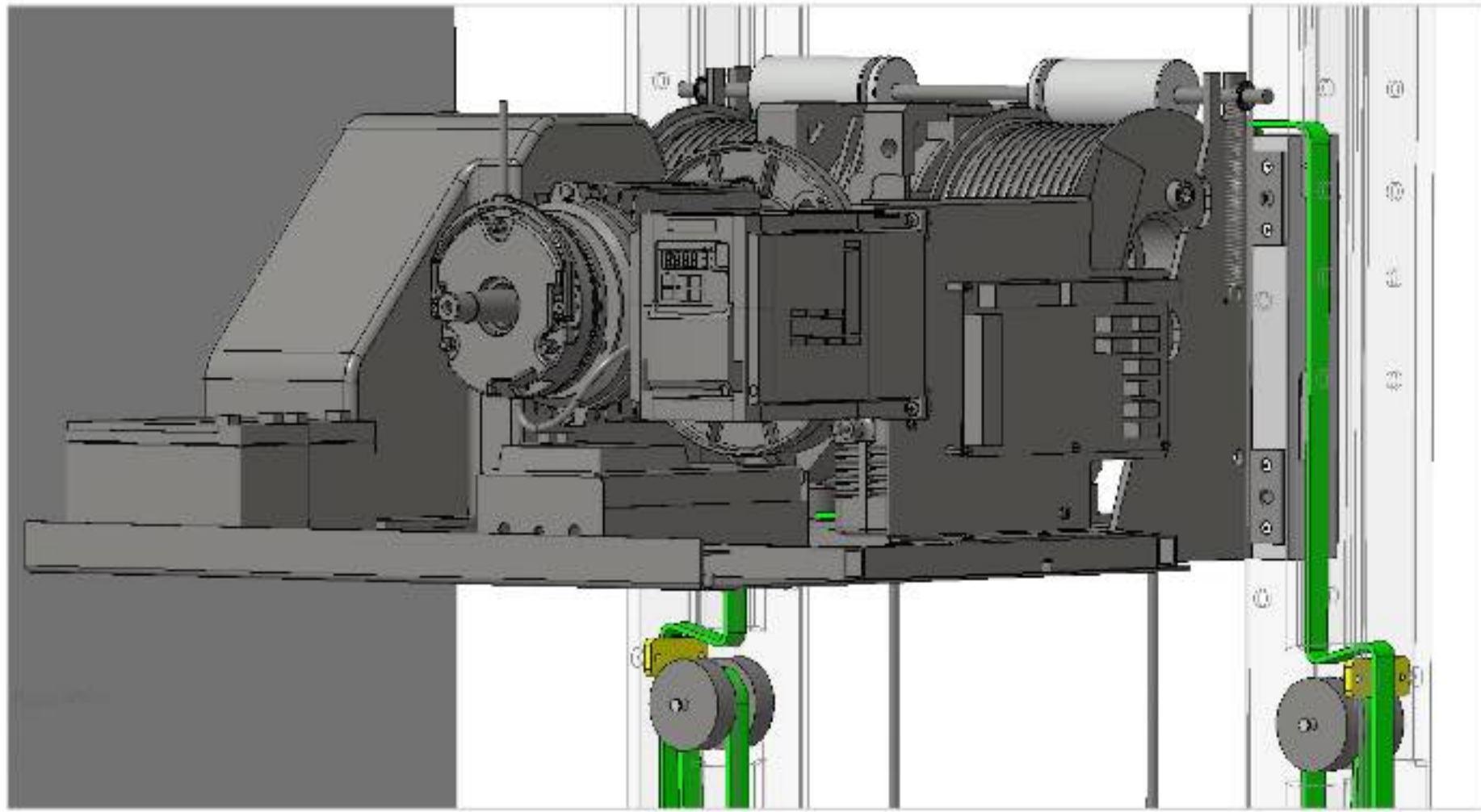

Connect the 6-core ribbon cables to the Remote PCB.

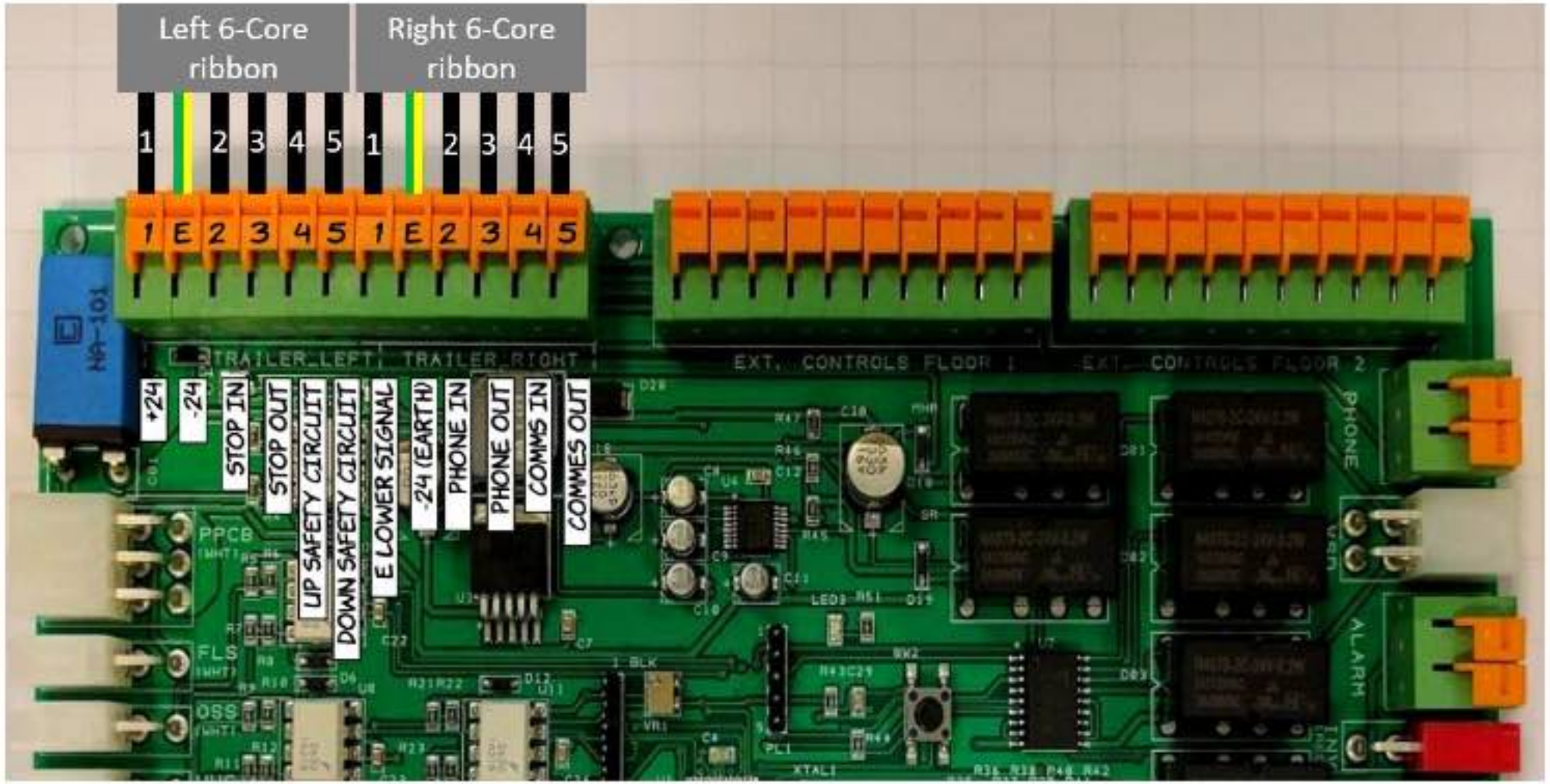

Pull the free cable ends through the opening on the back of the rails and under the pulley on top of the weights then over the rail pulleys and down towards the ground. Keeping tension on the free ends locate the weights inside the rails and position them just **under the opening**. **Clamp the cables to the rails to hold this position.**

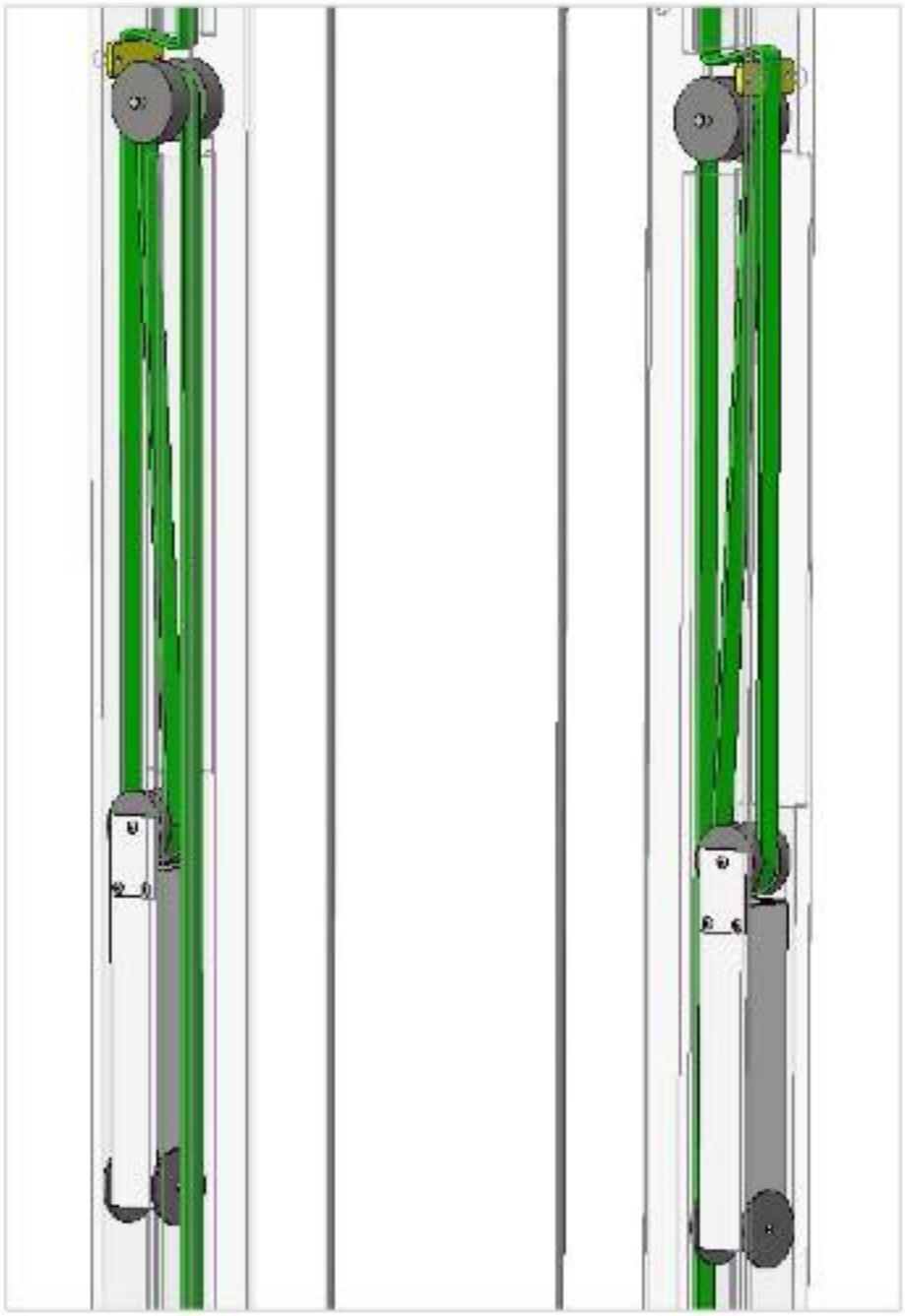

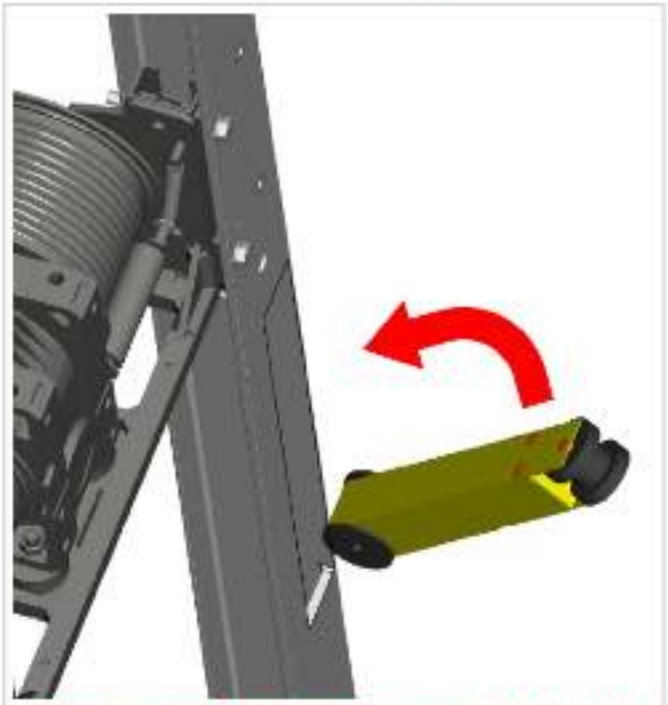

Insert weight side with screws into rail first

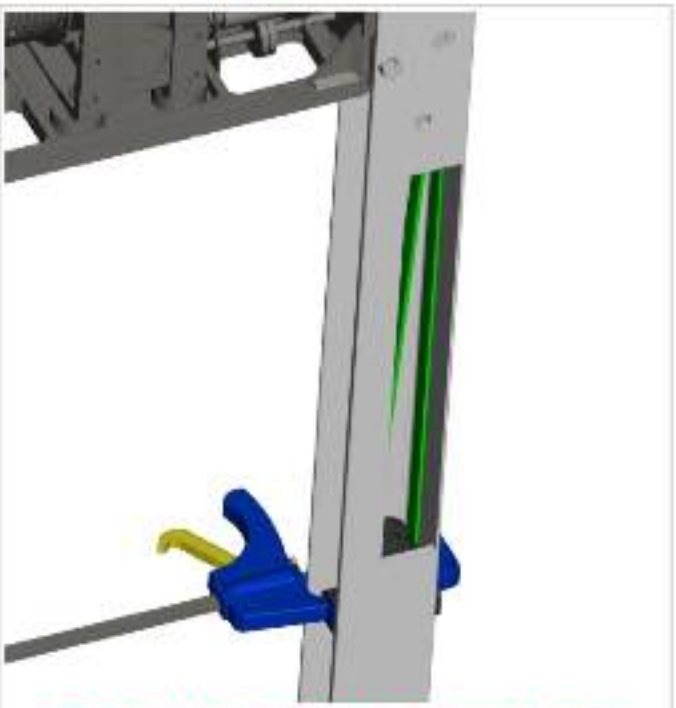

Clamp cable so weight sits below opening

Feed the ropes off the rear of the drums down through the chassis. Fit the rear and base covers using M4x12 pan pozi screw (9 places).

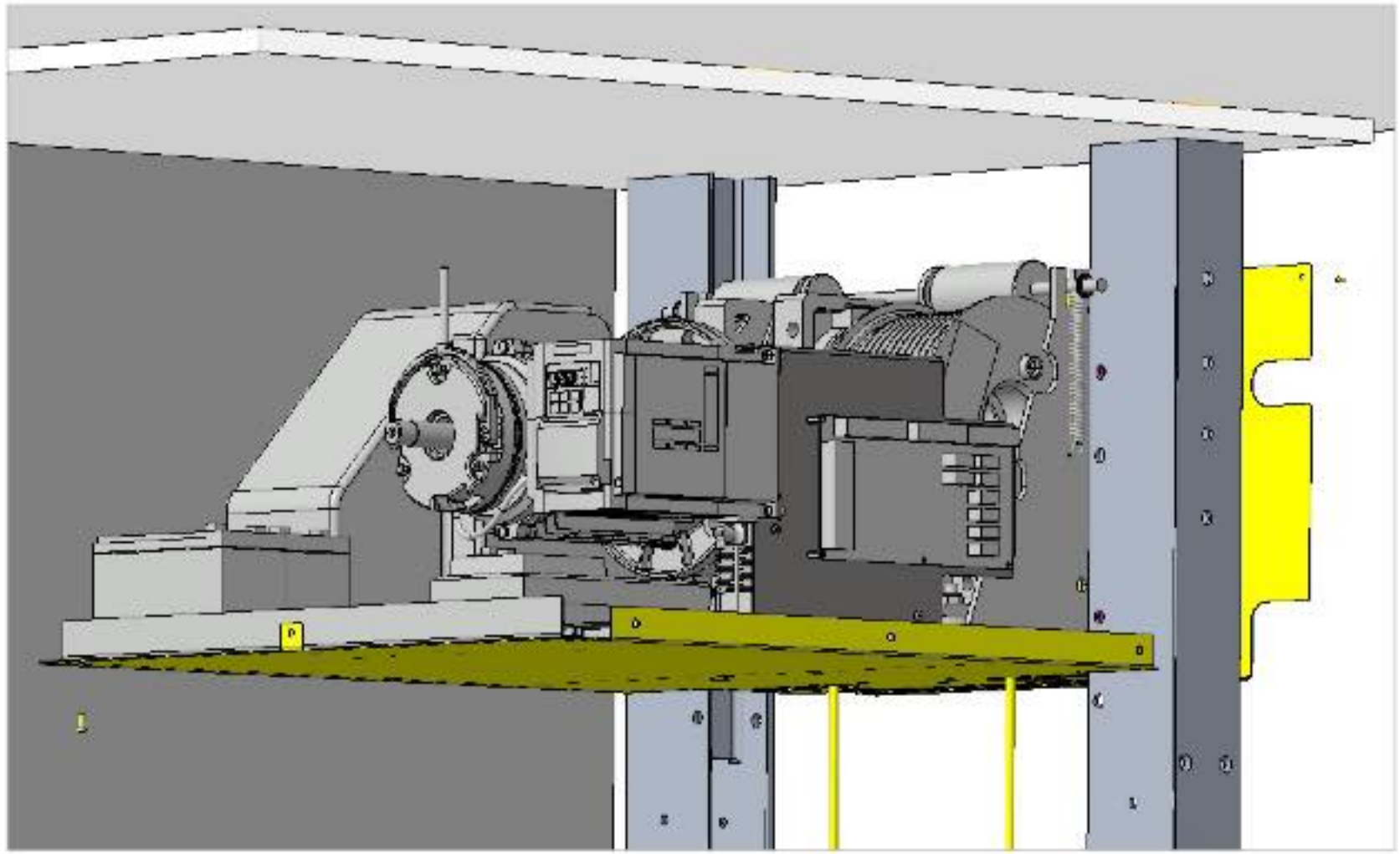

Position the carrier centred to the lower rails and turn the upper and lower main wheels into the guides to within 1.5mm of the inside face and tighten. Run the cables down using the handbox, remove the shoulder bolt and binx nuts and connect the cables to the equalising bar.

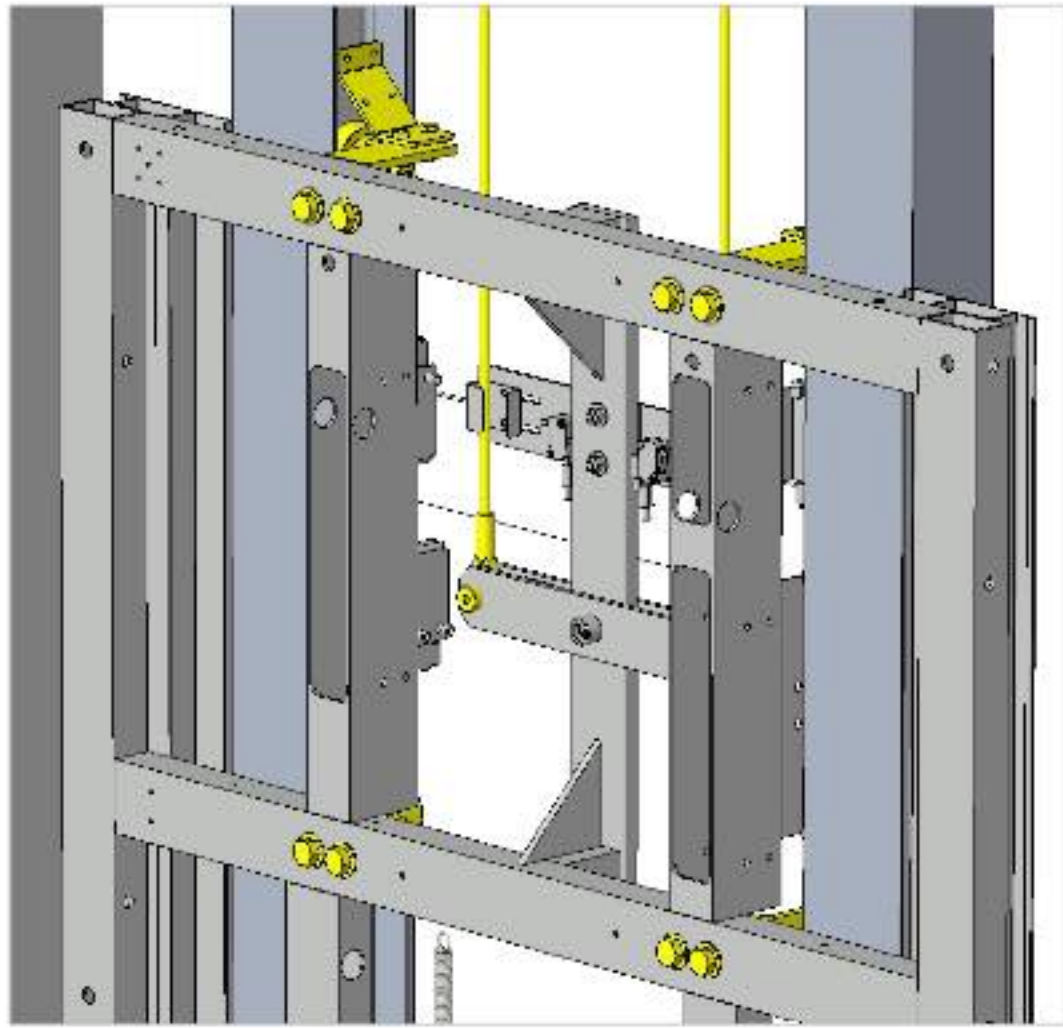

Raise the carrier off the floor slightly and turn the upper and lower compensating wheels fully into the inside face of the guides and tighten. Check the carrier is still centred and plumb using a laser level and adjust if necessary. Lower back onto floor.

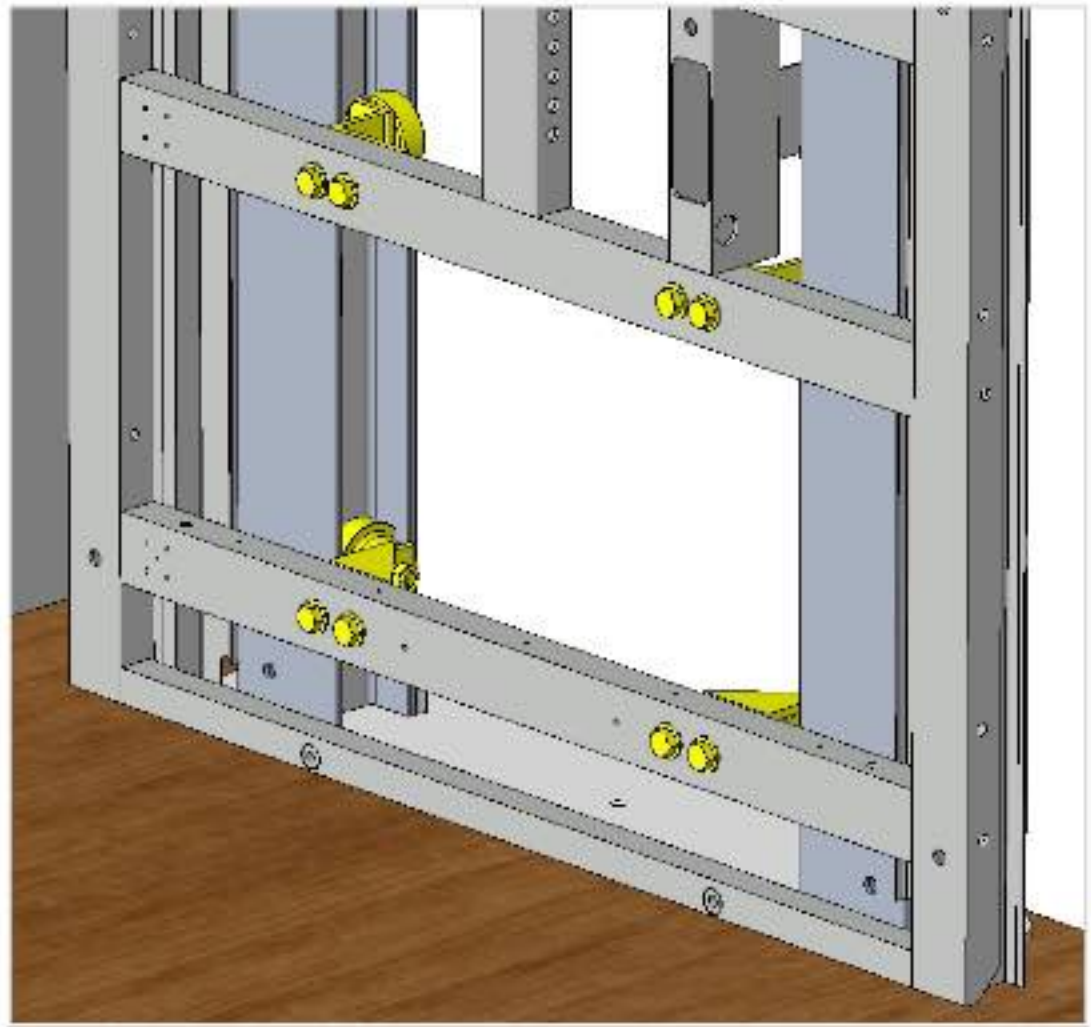

Route the overspeed cable as shown and down through mount and trapdoor towards carrier.

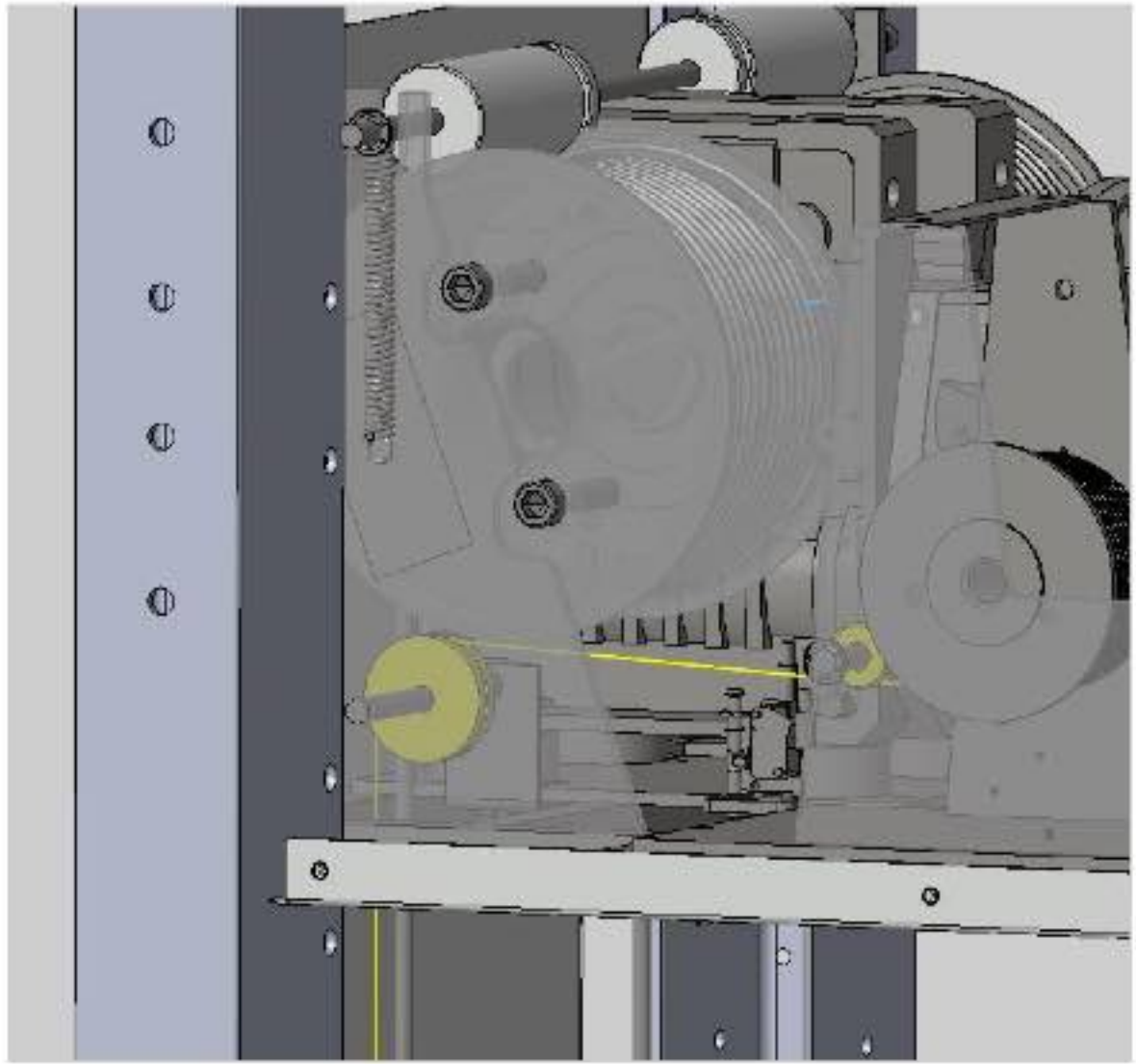

Remove the cable grip and loop the end of the overspeed cable around the brake lever spring and secure using the cable grip.

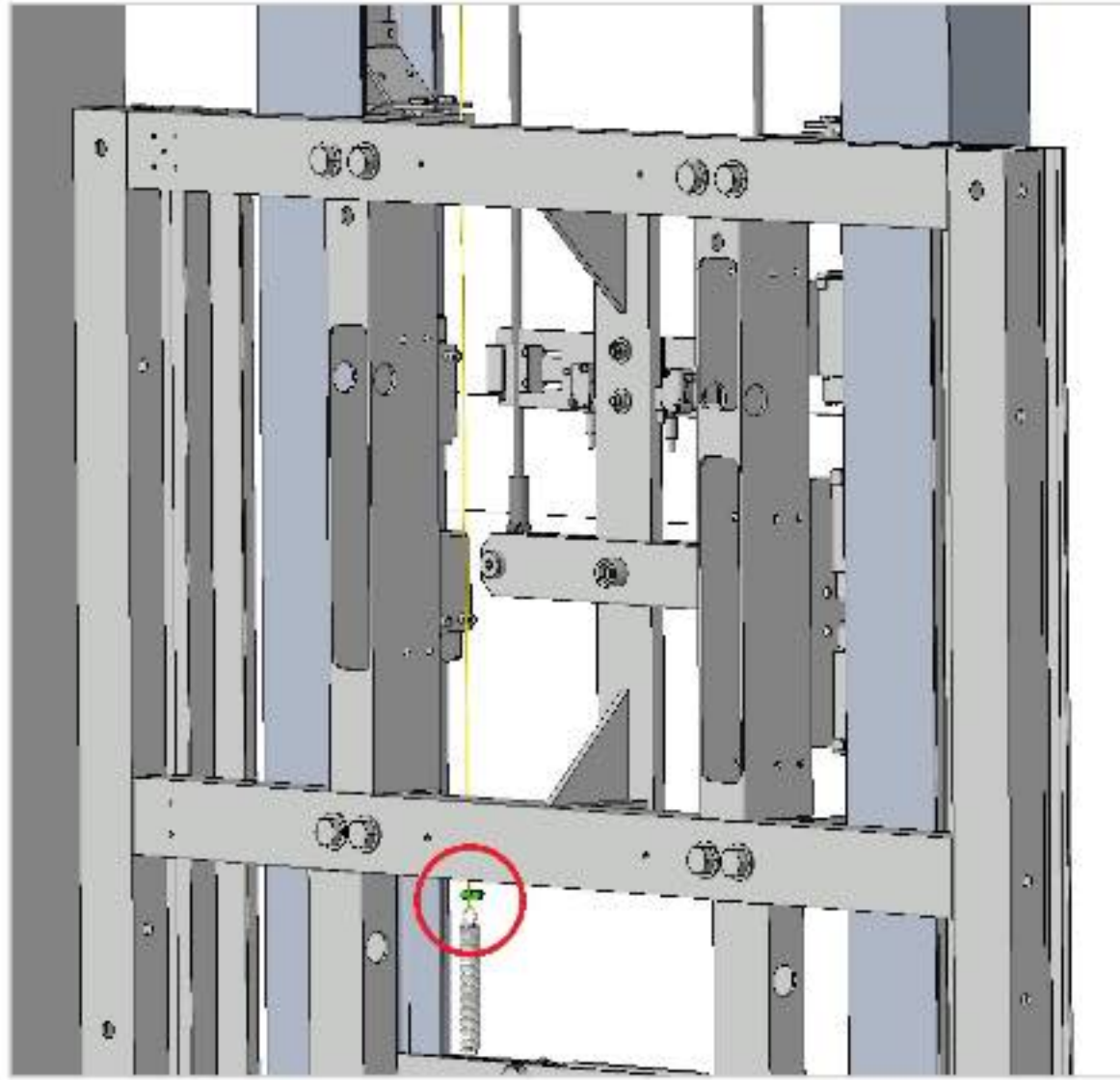

Clamp the 6-cores cables underneath the clamp brackets so there's no slack and cable tie (4places). Route the cables down inside and cable tie to the switch mounting box section. Insert both cables through the centre cable ducting. **Remove the clamps holding the cables to the upper rails**.

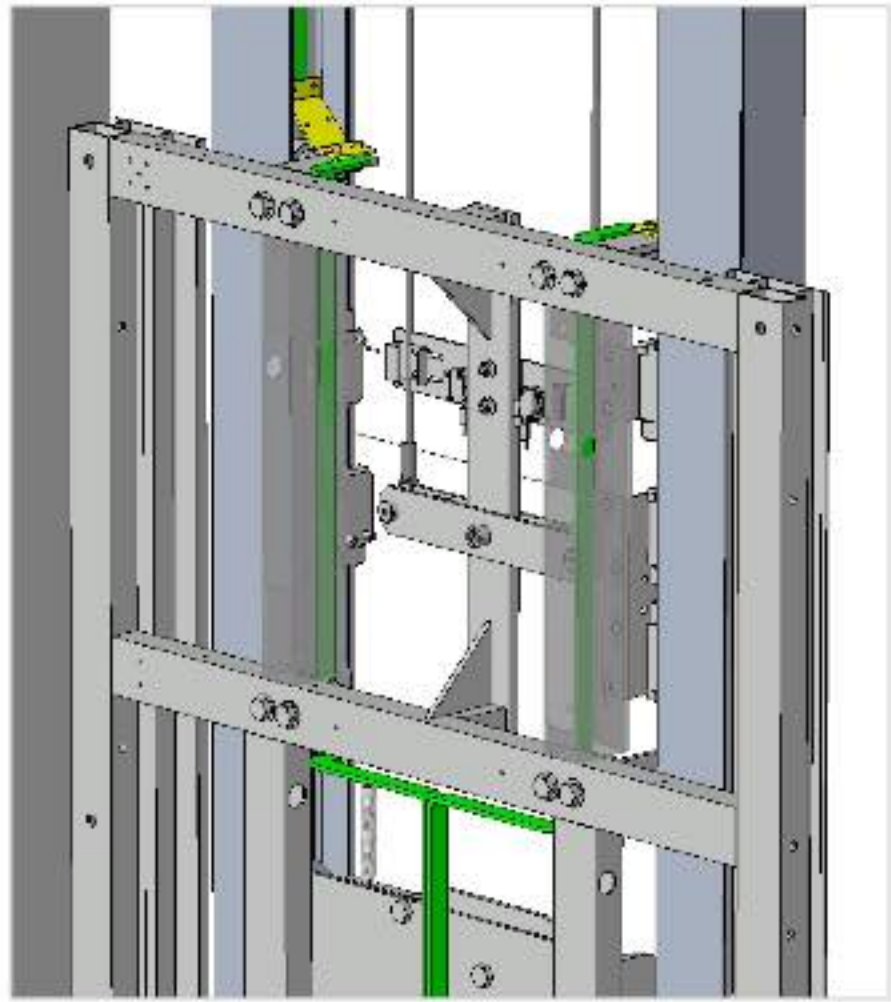

Connect the 6-core ribbon cables to the Main PCB.

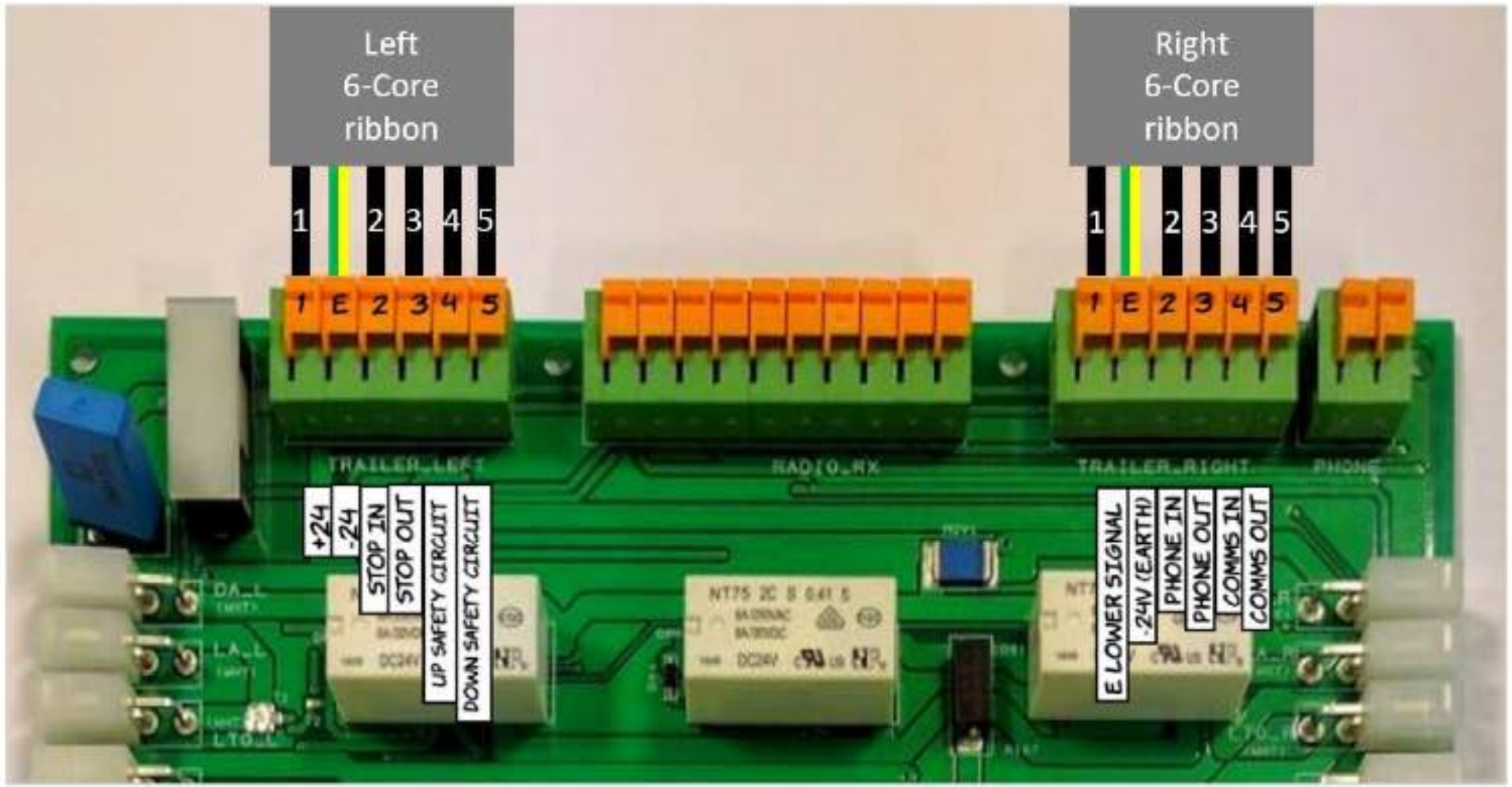

Cam kits supplied depending on lift travel.

3m Lower rails	Length (mm)	Qty
Stop cam	150	2
Trap cam	2205	1
Tray bypass (Upper)	1500	2
Tray bypass (Lower)	1650	2

4m Lower rails	Length (mm)	Qty
Stop cam	150	2
Trap cam	2205	1
Tray bypass (Upper)	1500	1
	2600	1
Tray bypass (Lower)	1650	1
	2600	1

Raise the carrier to the upper level moving the trap door as necessary. Cut the cams for the lower rails according to the dimensions below. Wipe the rails with the priming pads provided, remove the backing tape and stick the cams in position.

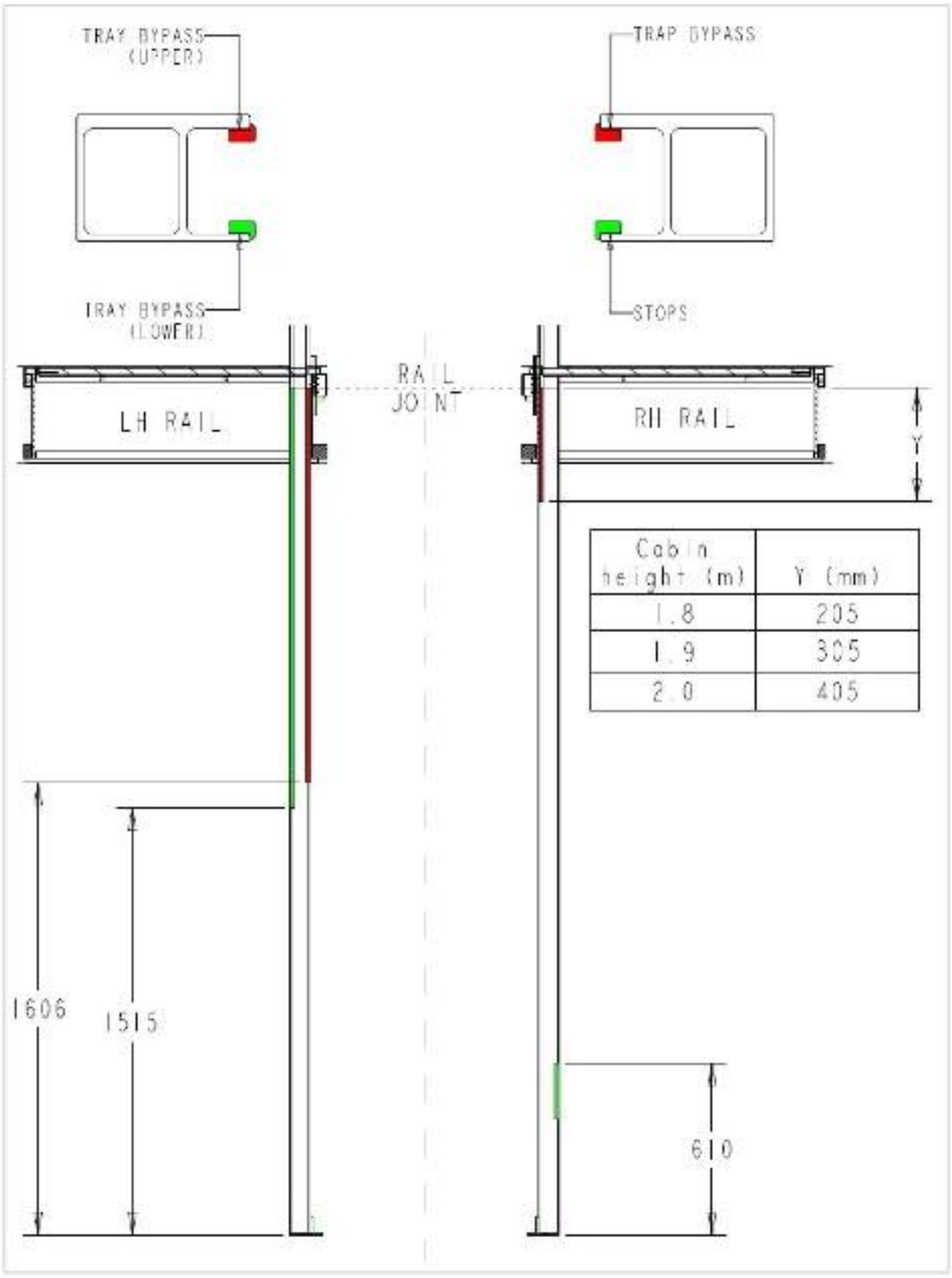

Cabin height (m)	Y (mm)
1.8	205
1.9	305
2.0	405

Lower the carrier to the ground floor ensuring that the lower left and upper right switch levers are lifted onto the cams such that the levers point downwards. Cut the cams for the upper rails according to the dimensions below. Wipe the rails with the priming pads provided, remove the backing tape and stick the cams in position.

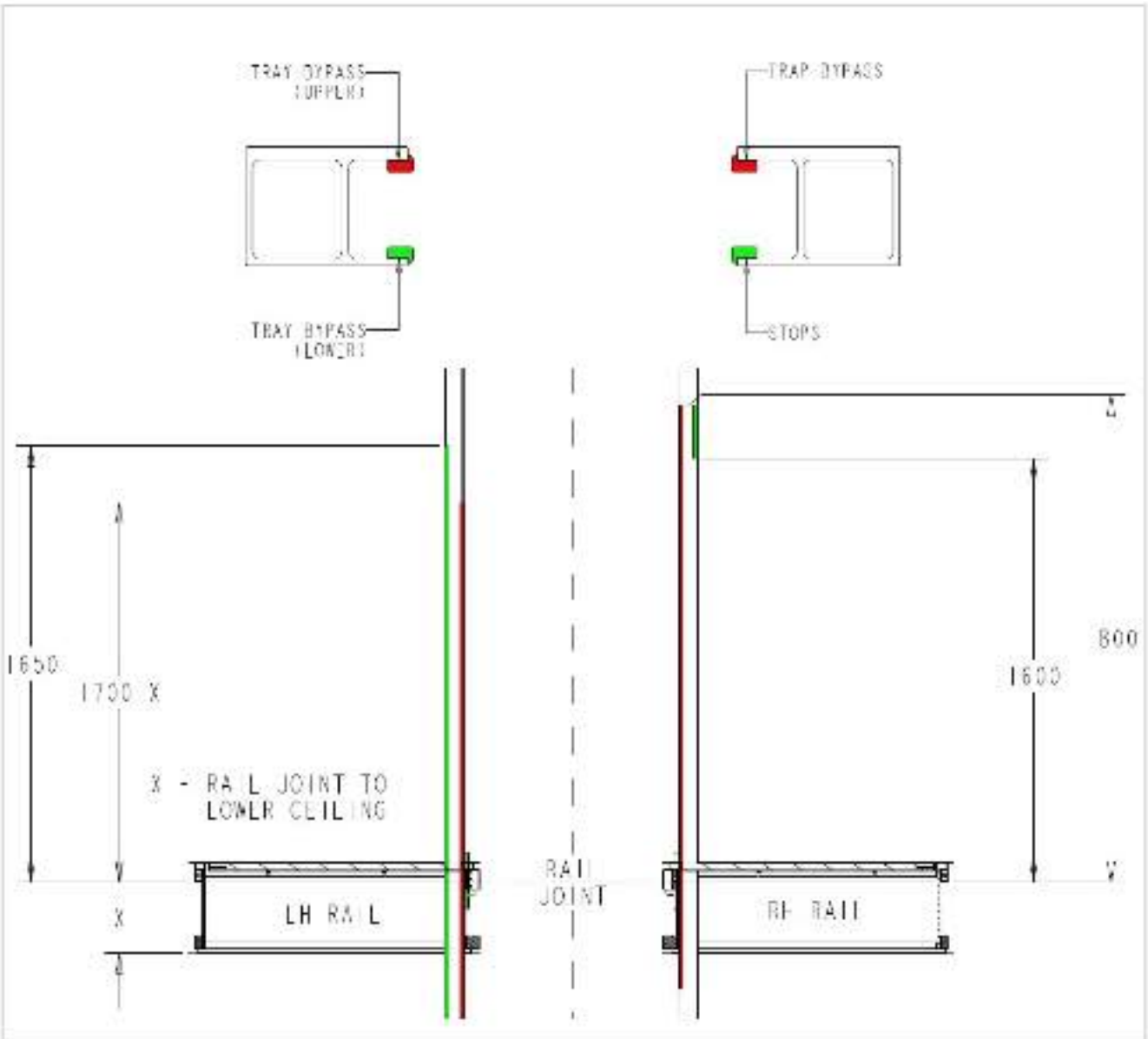

Position the side next to the carrier and insert lowest M8x70 cap socket bolt. Raise lift and prop the front corner to keep side level. Insert the remaining M8x70 cap socket bolts (5 places) starting from the top. Remove the prop and check the side for level.

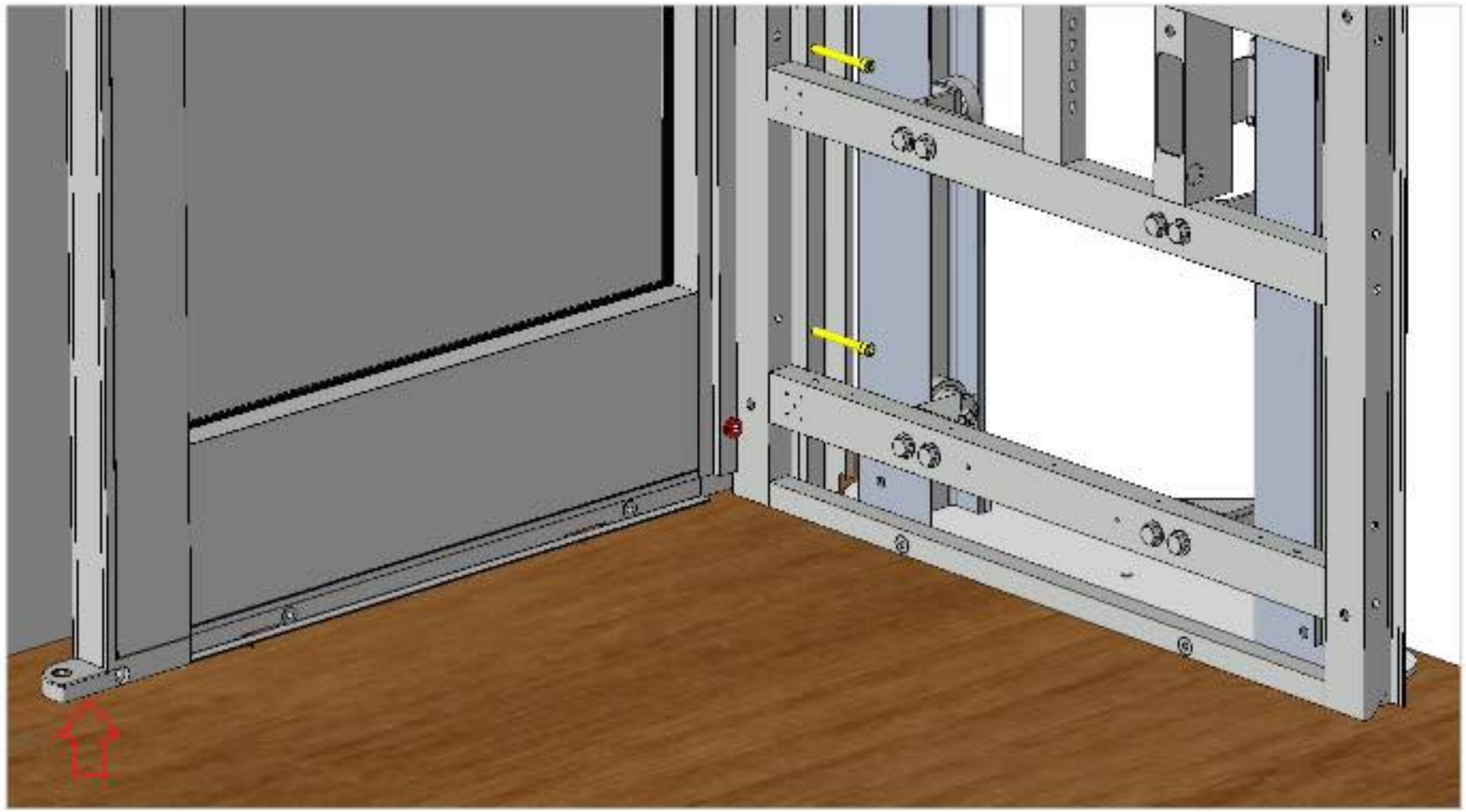

Raise the lift high enough to access underneath, locate the floor into the side and fix using M8x40 hex bolts (4 places). Locate ramp boss into hole and secure using M8x50 cap socket bolt. Recheck levels and squareness.

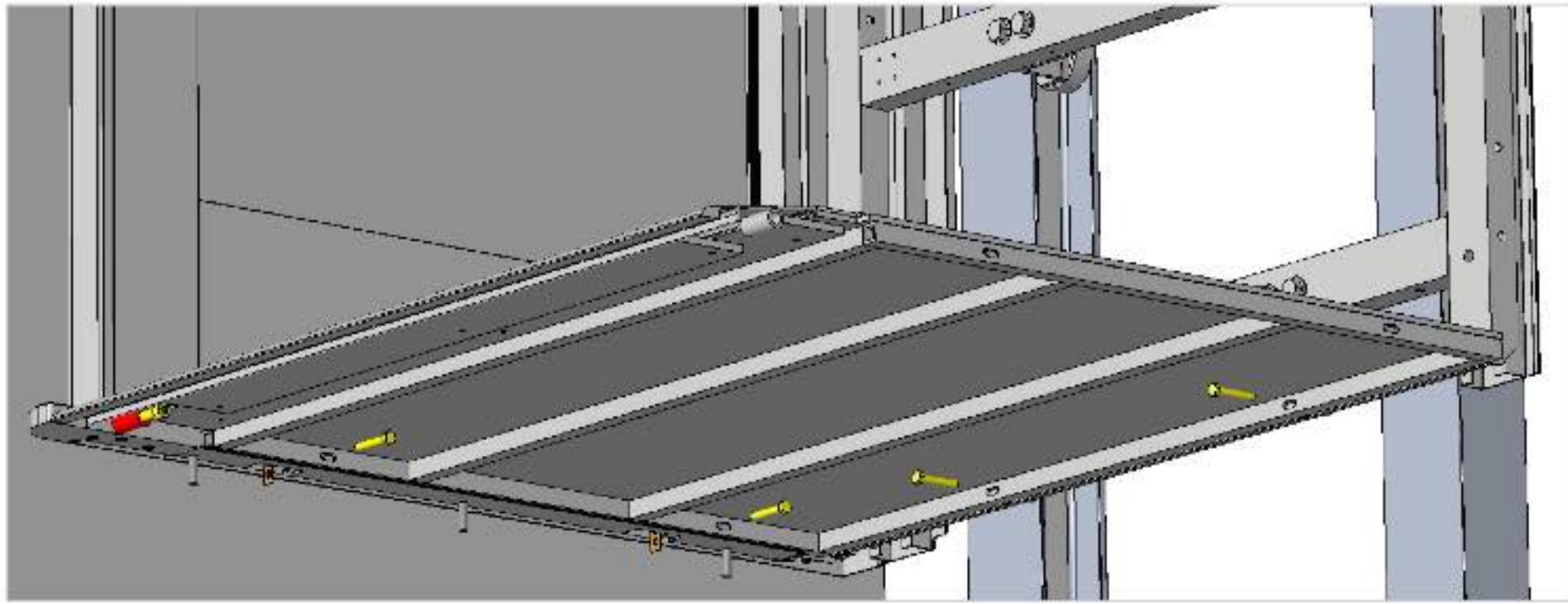

Using the same procedure attach the opposite side and add the reaming M8x40 hex bolts and M8x50 cap socket bolt into the floor and ramp respectively. Recheck levels and squareness.

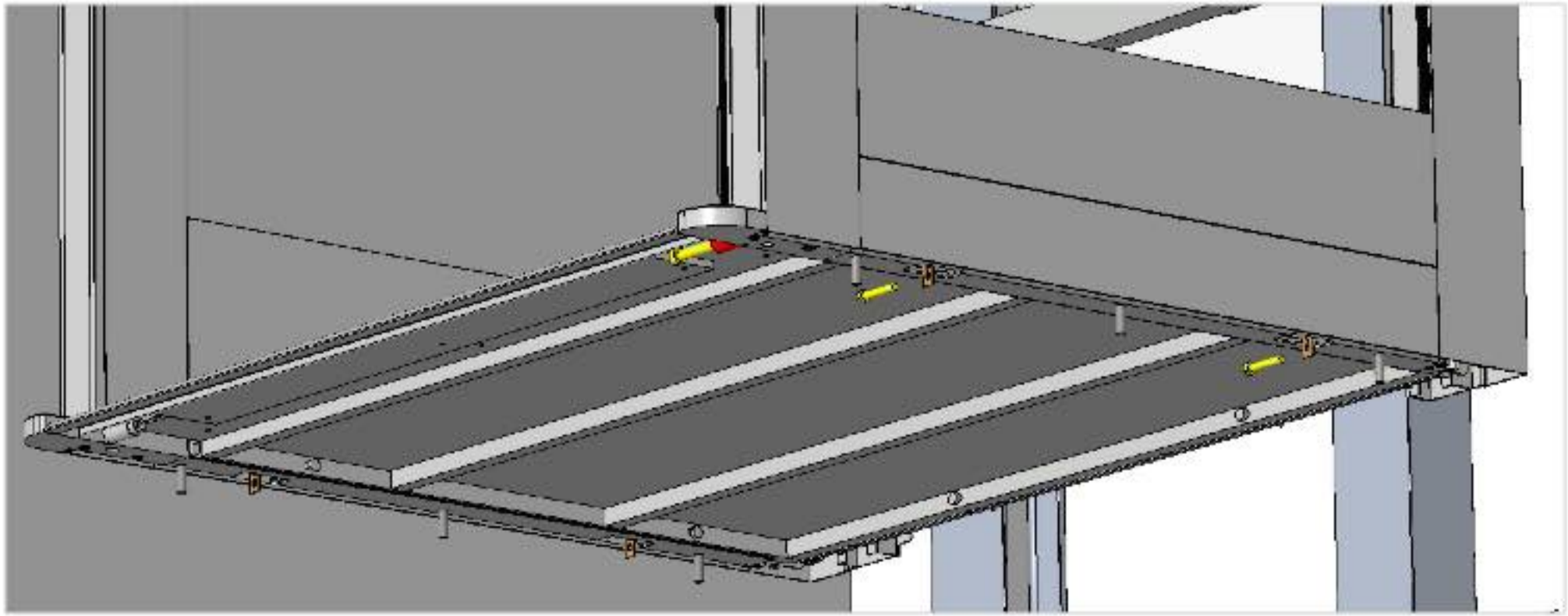

Locate the door into the lower bush and prop with a 35mm block. Remove the cover from the ceiling box and slide the bush onto the upper hinge pin and loosely fix up through the carrier into the ceiling box using M6x70 pan pozi screws (2 places). Close the door, prop using a 10mm block and fully tighten M6x70 screws.

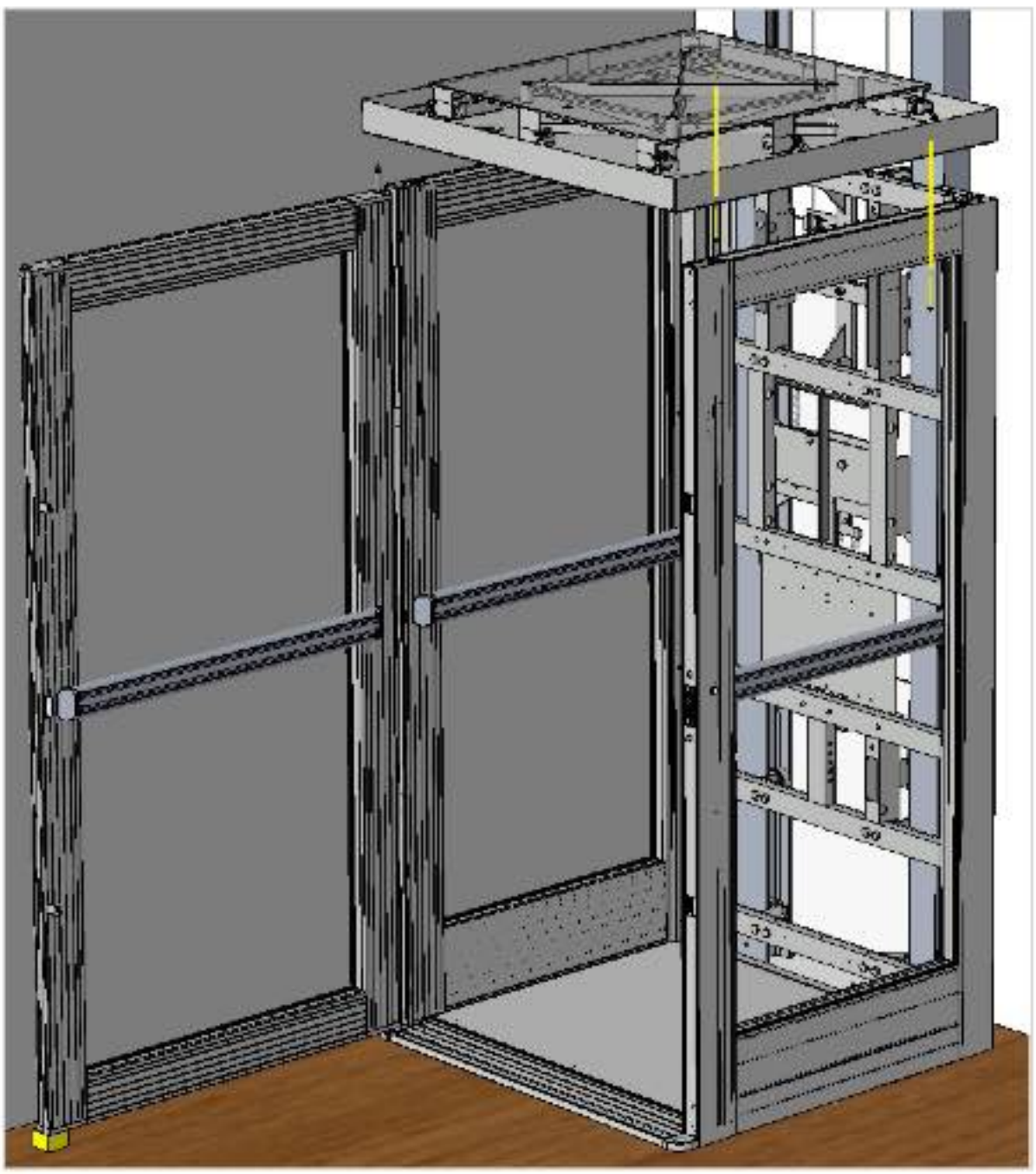

With the door still closed and propped fix the ceiling box into the side uprights using self-tapping M6x50 pan pozi screws (8 places), starting at the hinge, then latch and rear corners. Remove the 10mm block and recheck levels and squareness. Switch on the mains power and test the remotes.

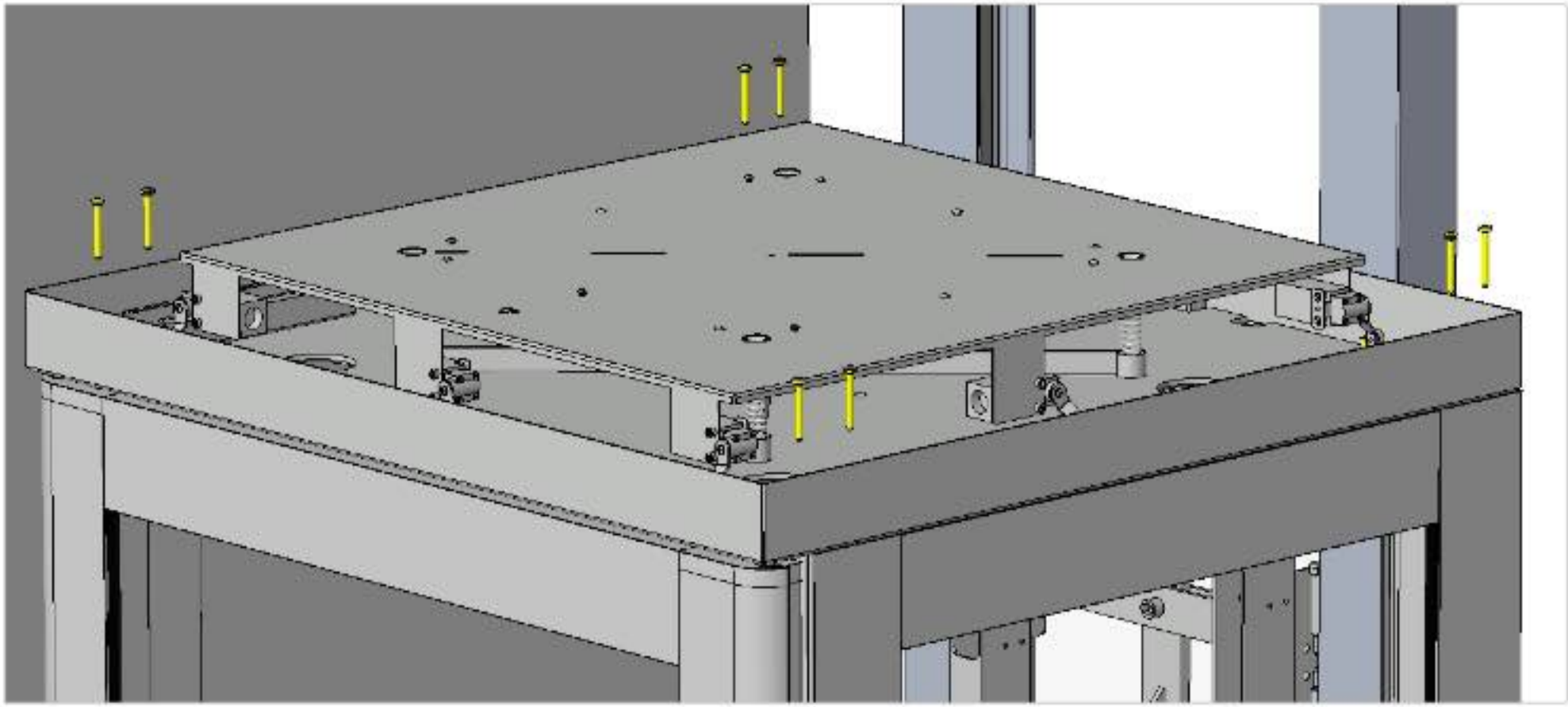

[Power door model only]. Fix the drive link to the upper door hinge and secure using and M6 washer and M6 nyloc nut. Connect the drive bar from the clutch to the link using an (M6) 8x12 shoulder bolt. Secure the shoulder bolt with an M6 nyloc nut.

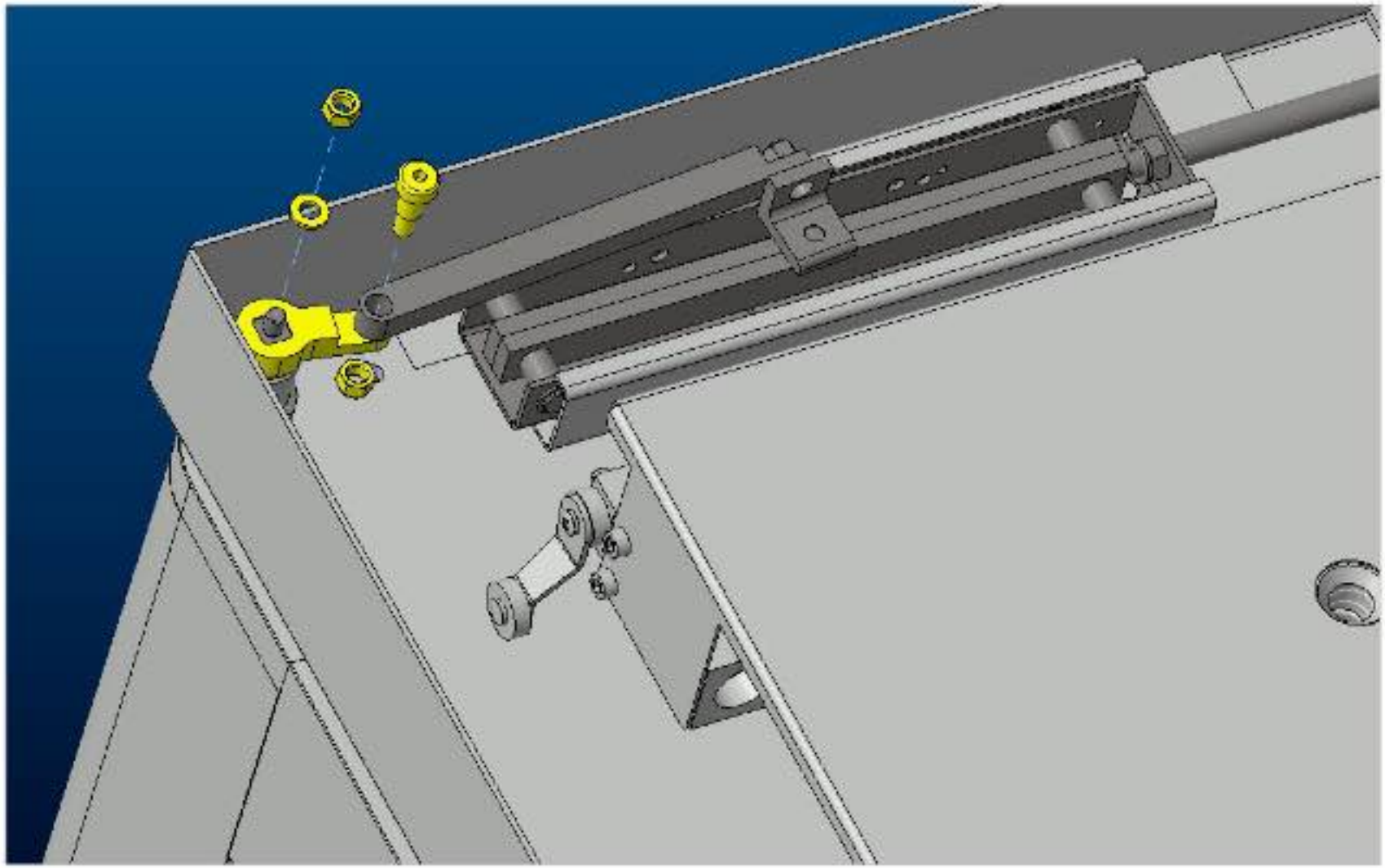

Set the door open position by moving the front reed switch.

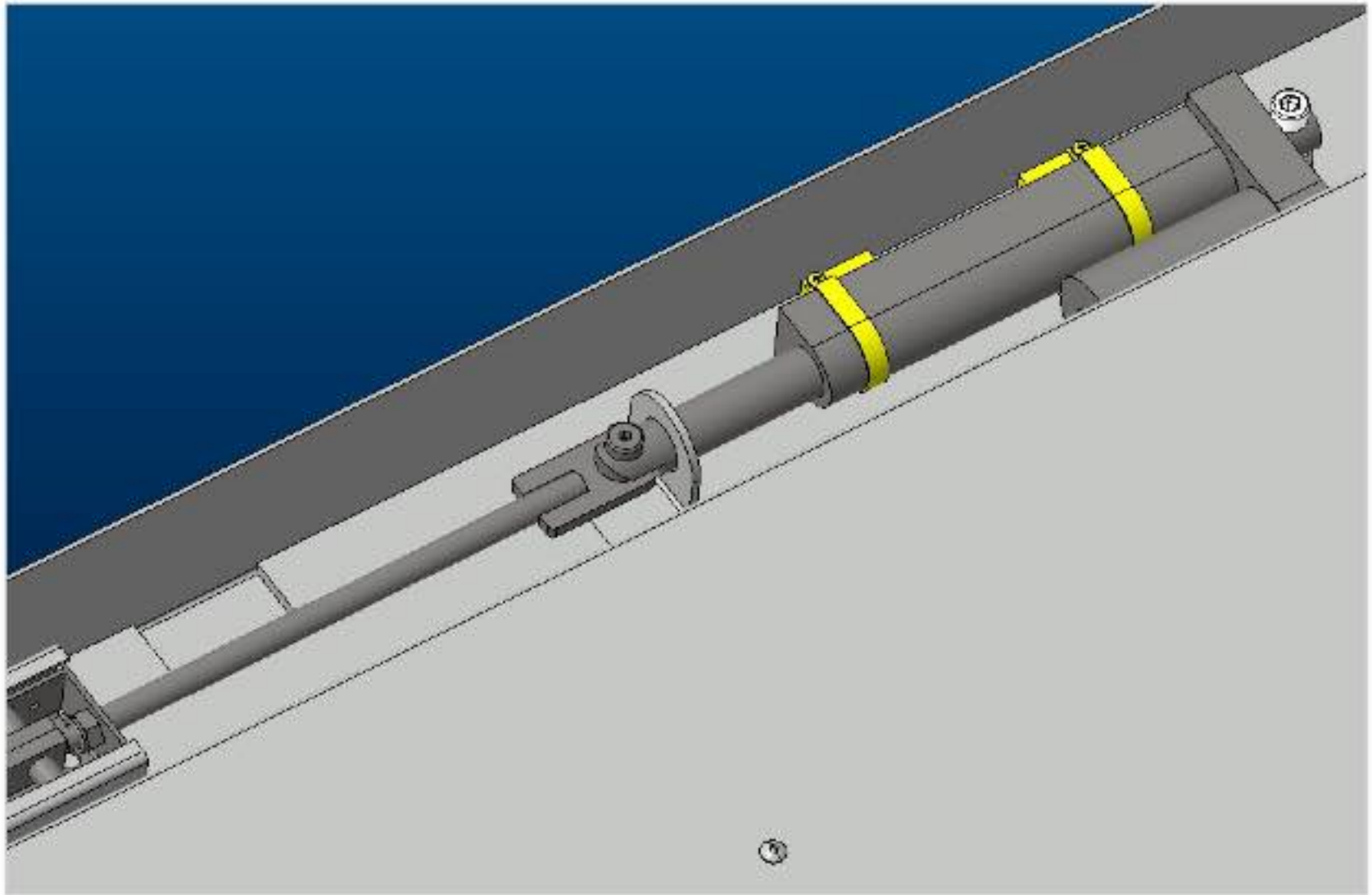

Raise the lift 400mm maximum off the ground floor and remove the protection channel underneath each side. Position the bottom tray under the lift and turn the intumescent blocks into the rails. Place a weight such as a toolbox on the bottom tray. Pull each spring down to the tray and fix using M4x12 pan pozi screws and M4 nyloc nuts (4 places). Generously lubricate each spring including between the strands. Remove the weight and pull the tray up and down a few times to check spring operation.

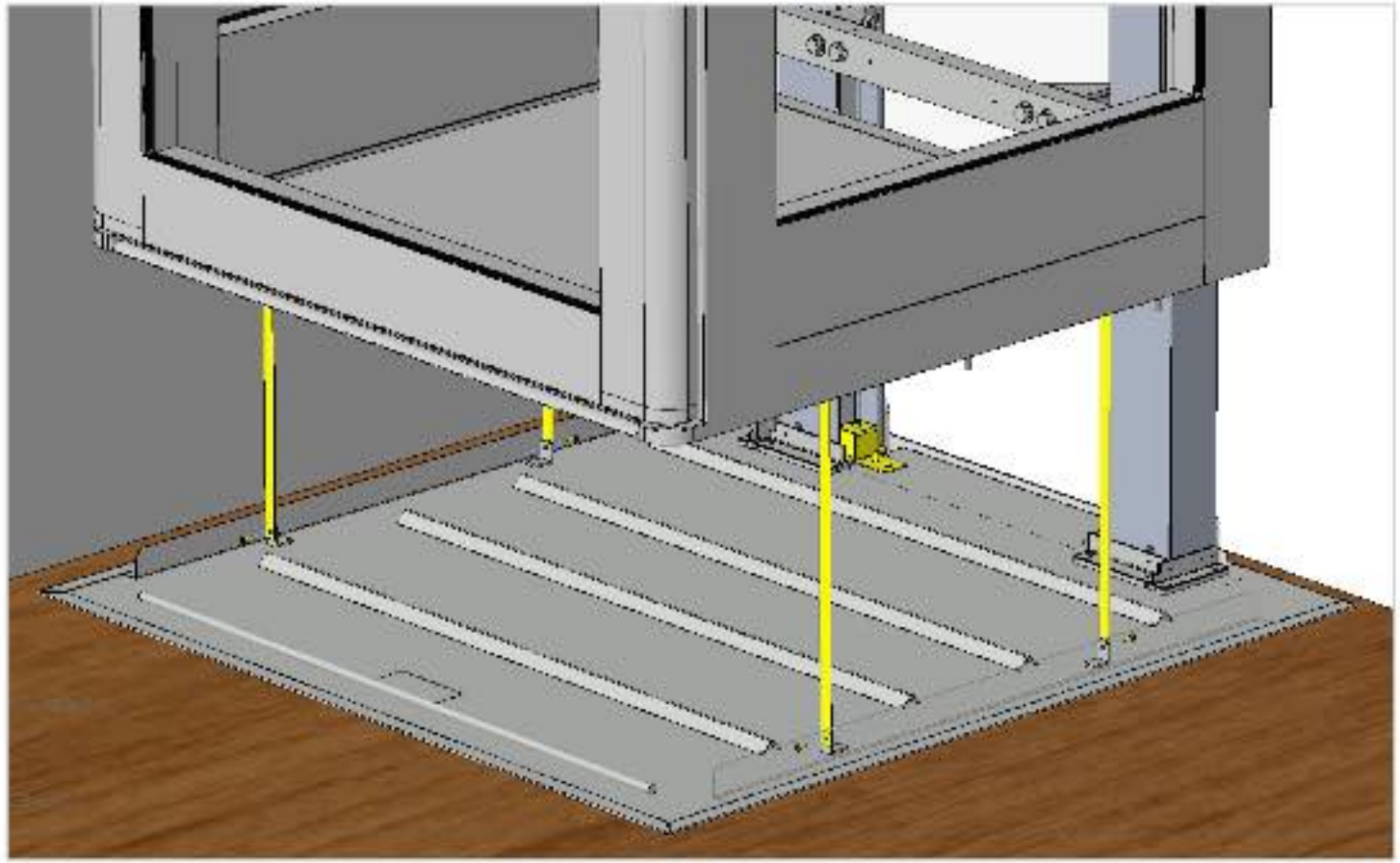

Test the bottom tray operation:

Run the lift up and pull down on the tray from the corners and middle of each edge.

Run the lift down and push up on the tray from the corners and middle of each edge.

The lift should stop after each test is performed.

Raise the lift and pick up the trapdoor (not shown). The centre switch on each side are for down-safety and those at each corner are for up-safety. The down-safety switches should all be activated under the weight of the trapdoor and will deactivate if the trapdoor is lifted thus stopping the lift. Conversely the up-safety switches should all be deactivated under the weight of the trapdoor and will activate if the trapdoor is pushed down thus stopping the lift.

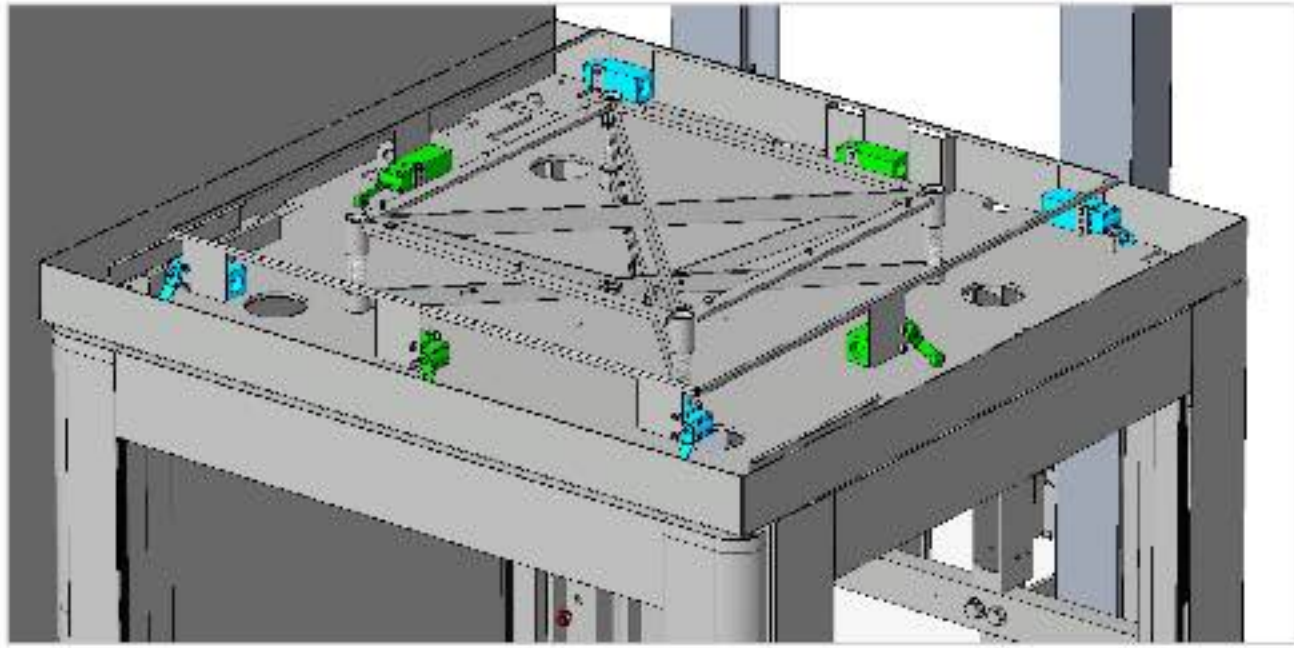

Adjusting the trapdoor switches:

The switch levers are all preset to 5° from vertical and can be adjusted in 5° increments.

To increase the down-safety sensitivity increase the angle of the lever.

To reduce the up-safety sensitivity increase the angle of the lever.

Test the trapdoor operation:

Refit the ceiling box cover.

Run the lift up and push down on the trapdoor from the corners and middle of each edge.

Run the lift down and push up on the trapdoor from the corners and middle of each edge.

Adjust each of the switches below to meet the required setting conditions.

Switch #	Description	Setting conditions
1	Upper tray bypass	Comes off cam when tray is within 10mm of lower ceiling liner
2	Lower tray bypass	Comes off cam when tray is within 10mm of ground floor
3	Trap bypass	Comes off cam when trap is within 10mm of first floor liner
4	Upper stop	Comes on cam when ramp level with first floor liner
5	Overtravel	Comes on cam 10mm after the Upper stop (*)
6	Lower stop	Comes on cam when on the ground floor

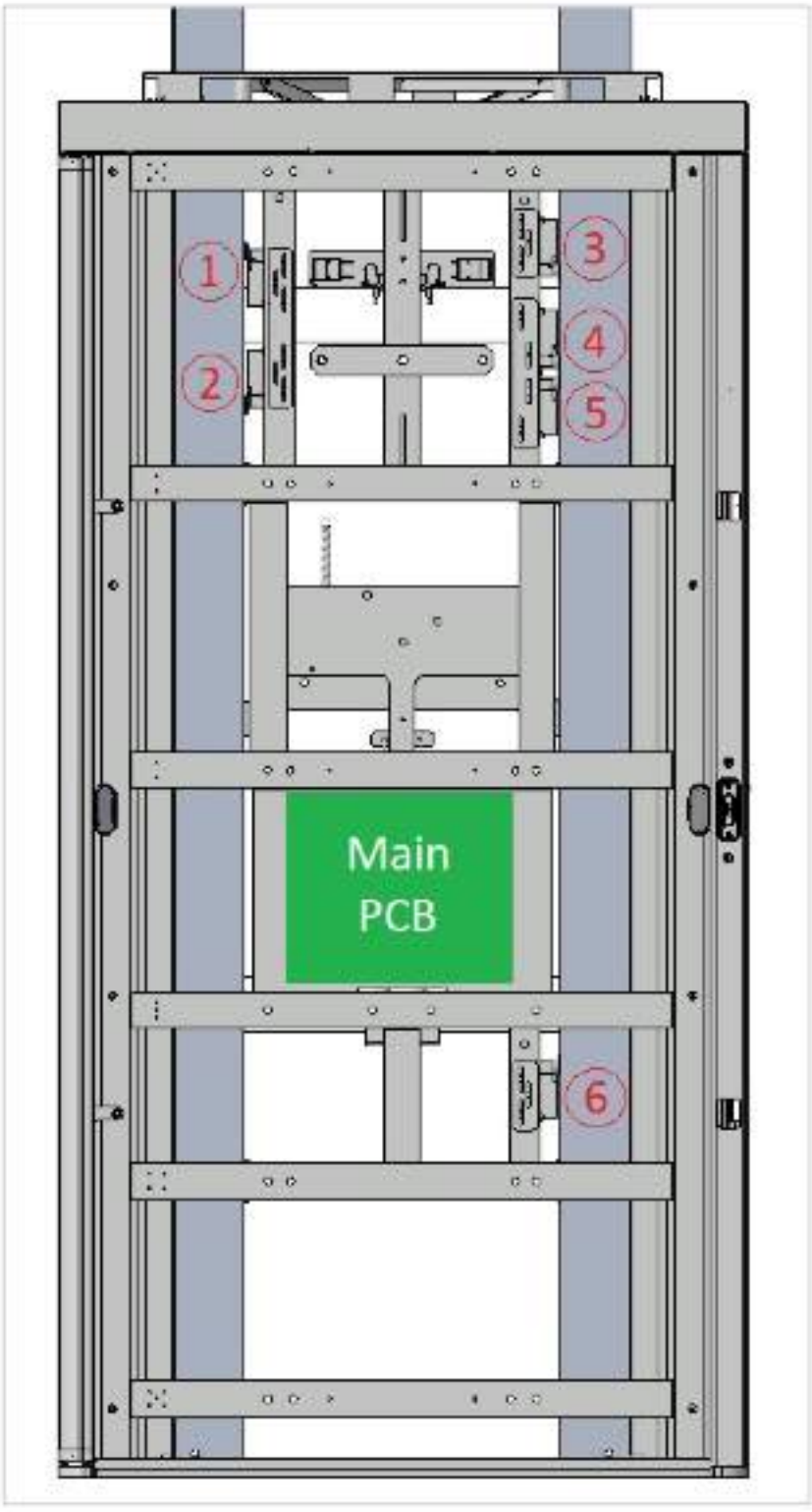

(*) Shouldn't activate in normal conditions.

Main PCB Settings/Adjustment

Element	Function	Adjustment / Indication
SW1 - button	Door reset	Reset and apply changes after adjustments
VR1 – trimmer pot	LCD contrast	CW to increase / CCW to reduce
VR2 – trimmer pot	Door sensitivity	CW sensitivity – / CCW sensitivity +
LED 3	Door timeout	Illuminates if door times out
LED 6	Door obstruction	Illuminates if door is obstructed
LED 7	Door reversal	Illuminates if door reverses
Dip switches 1 & 2	Door speed	Adjust combination to alter door speed
Dip switch 5	Door sensitivity on/off	Always on (up)
Cursor	LCD menu selection	See LCD

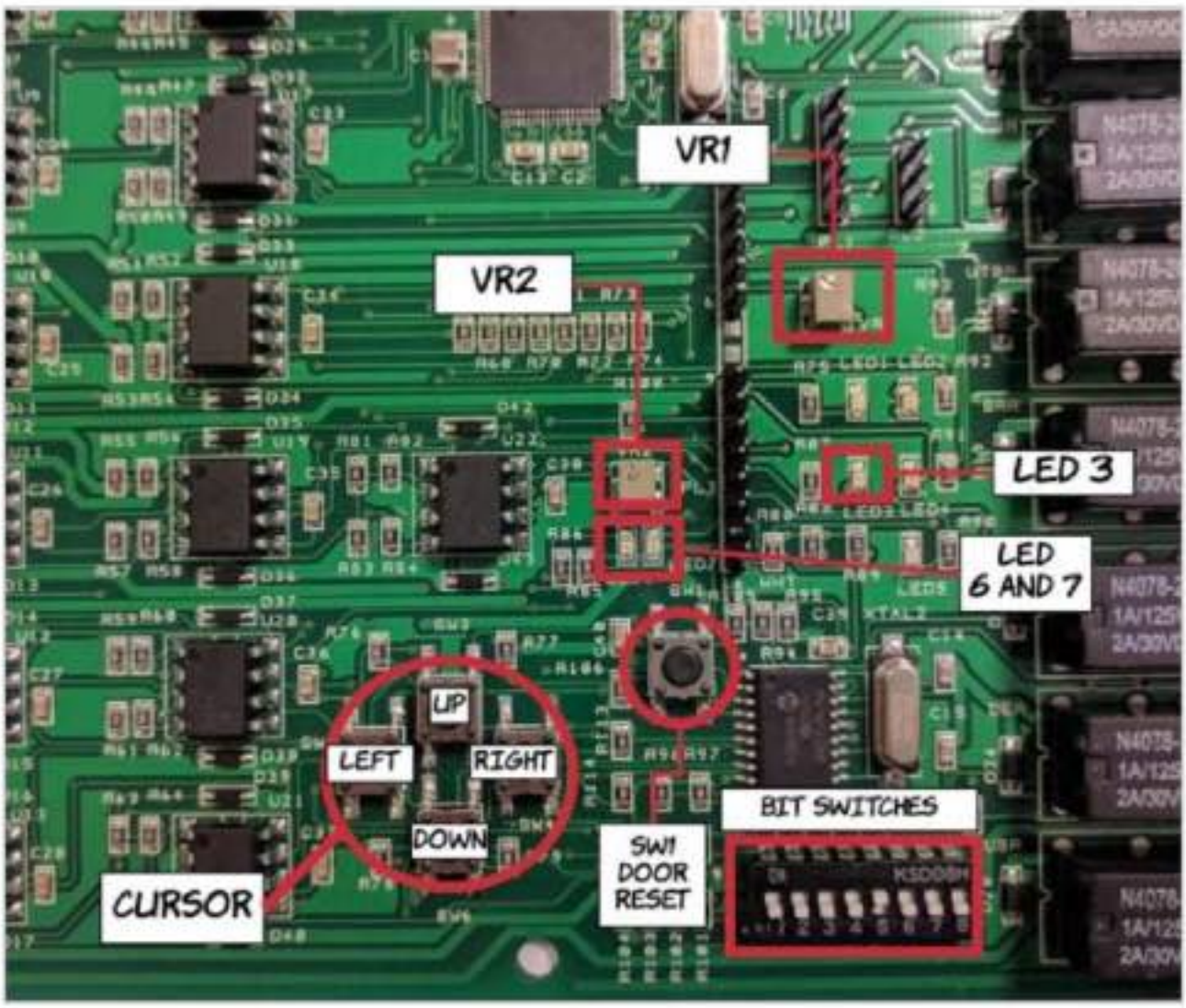

Setting door reversal sensitivity

- Adjust VR2 trimmer so door operates without reversing
- Press SW1 reset
- Test door reverses when obstructed

Main PCB Settings/Adjustment

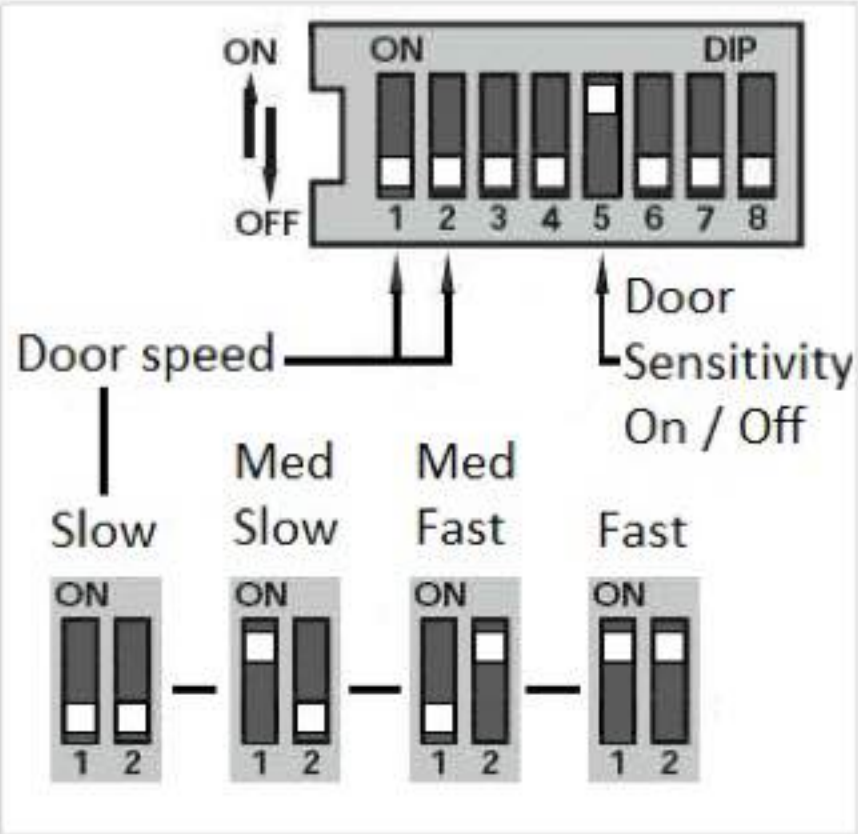

Setting door speed

- Configure Dip switch 1 & 2 as required
- Press SW1 reset
- Retest door reversal if speed was altered

Main PCB Settings/Adjustment



Setting bottom tray timer

(Lift should fully settle on the floor without ropes going slack)

- Press & hold left & right cursors on Main PCB
- Release when LCD screen displays 'Set Up'
- Let the display to cycle to the last screen
- Use the up & down cursors to respectively increase or decrease the timer
- Press the right cursor to apply the setting
- Press the left cursor to exit menu
- Send the lift up and down to test
- Repeat process and adjust if necessary

Main PCB Settings/Adjustment

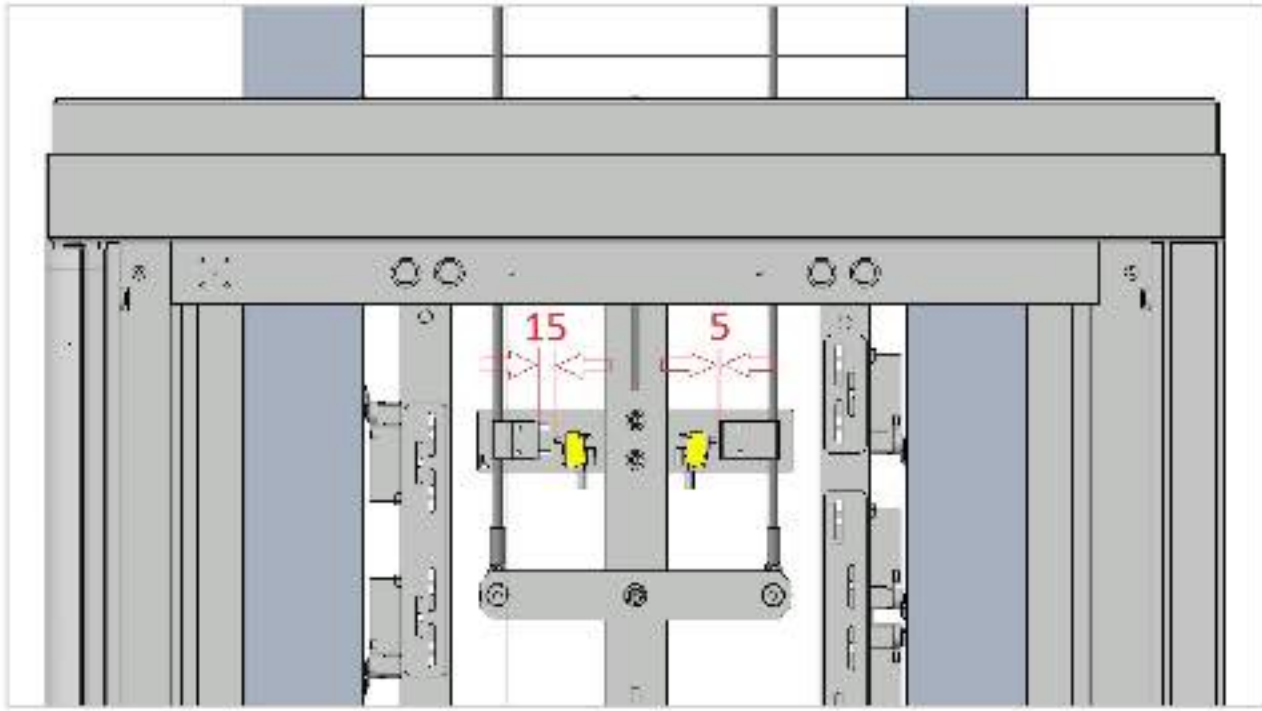

Setting slack rope switches

- Raise the lift off the floor
- Adjust the left-hand switch to 15mm off the rope follower
- Adjust the right-hand switch to 5mm off the rope follower
- Run the lift through several full cycles
- Ensure these switches don't activate at the ground floor
- Adjust if necessary

Main PCB Settings/Adjustment



Performing the Engineering Test

Warning: Only commence test when lift is fully configured.

- Press & hold left & right cursors on Main PCB
- Release when LCD screen displays 'Set Up'
- Let the display cycle to this screen
- Press & hold the right cursor for 5 seconds
- On the next screen press & hold the up cursor to confirm
- On the 'Bottom Tray Time' screen press the left cursor to return
- Follow the on-screen Engineering Test prompts
- Note any failed tests
- If the test fails correct the fault and restart the process
- Repeat until the test passes

Unclip the console panels from the frame starting from top to bottom. Loosely fix the console frame to the carrier using M5 x 8 button torx screws (6 places). Clip the left and right panels to the sides. Centre the console frame between the panels and tighten in position. Clip the left and right panels to the console frame. Refit the console panels to the frame starting from bottom to top.

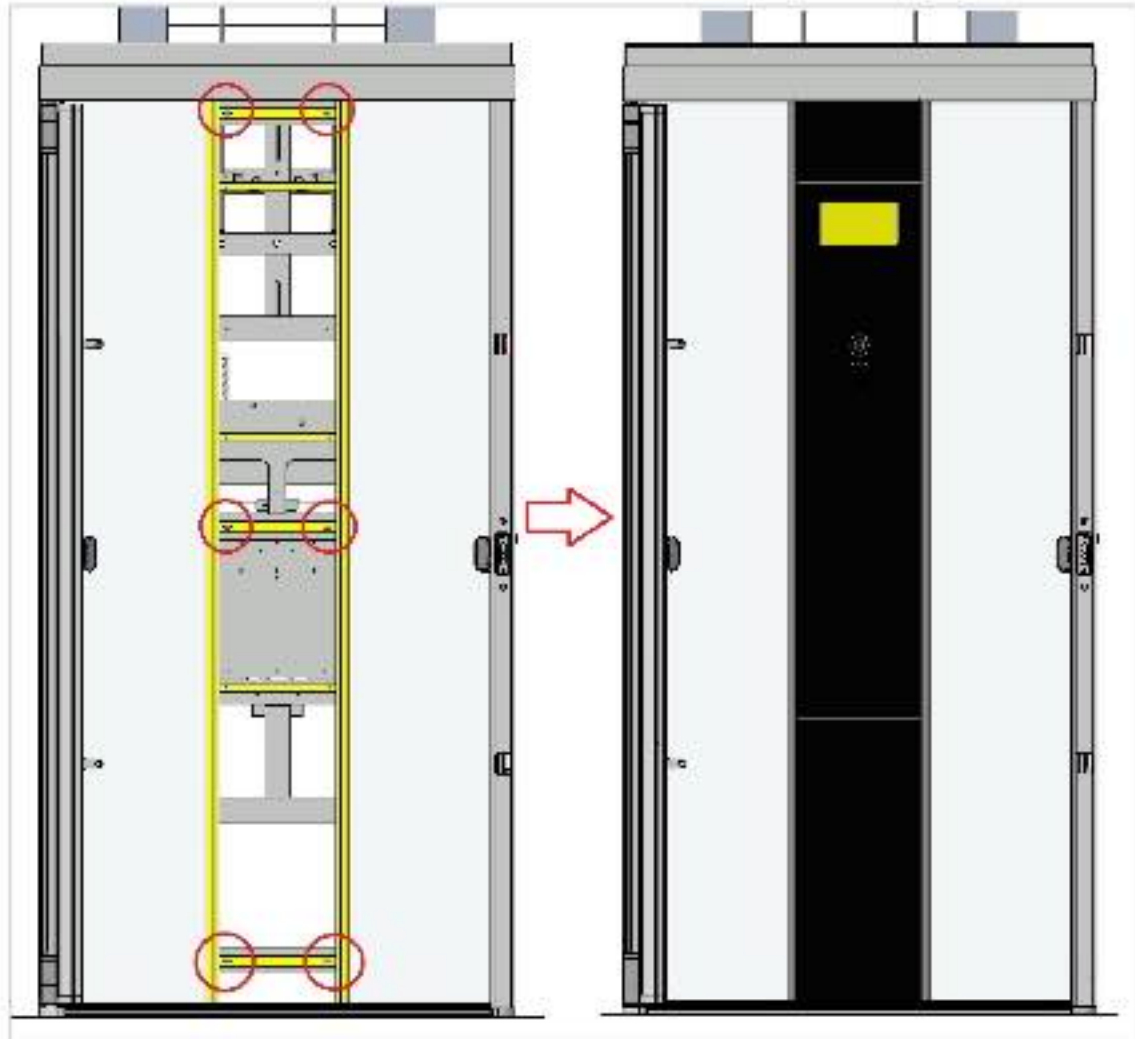

Connect plugs from centre console to Main PCB.

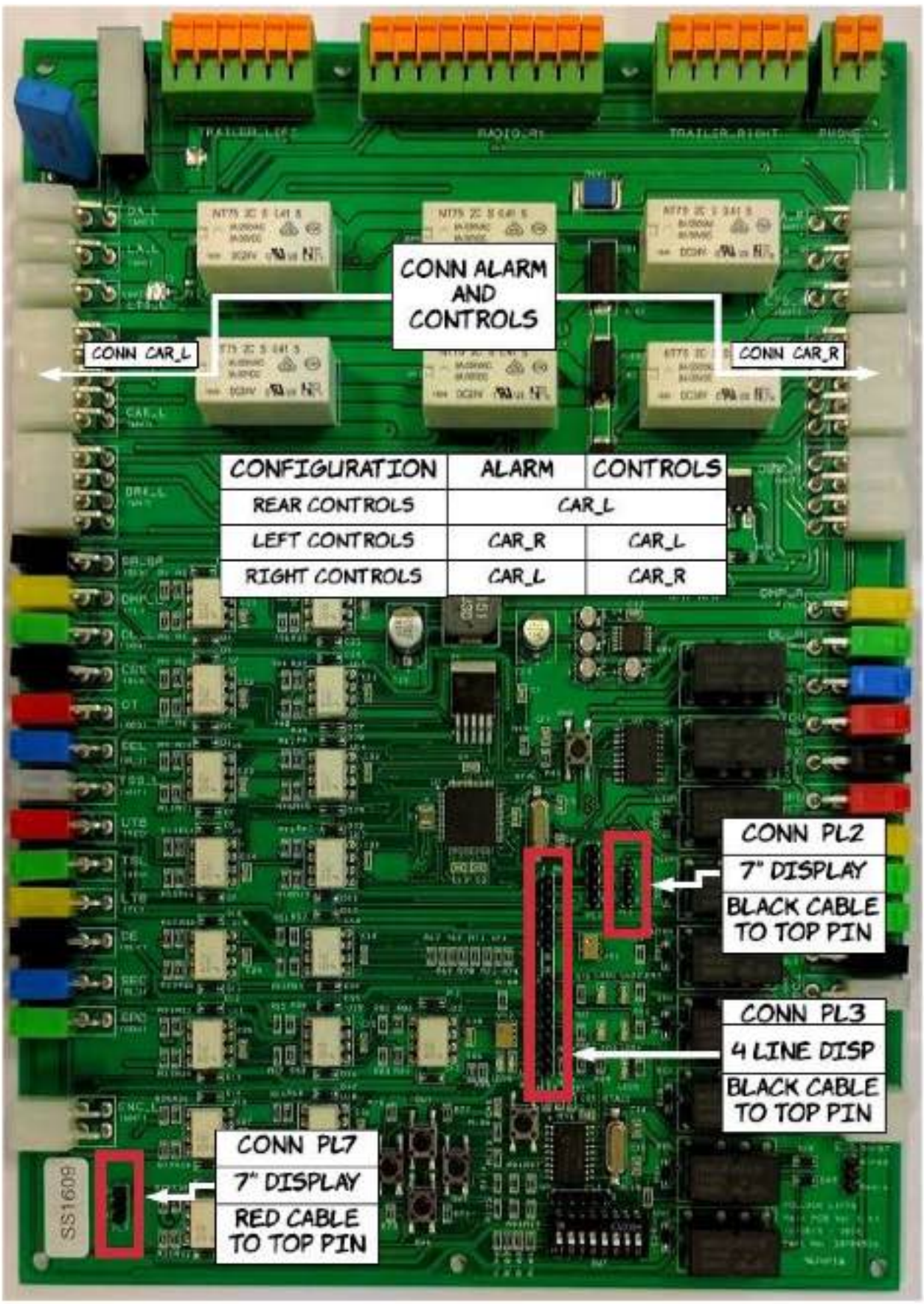

Plug the motor hood switch into the Remote PCB and secure the hood using M4 x 12 pan pozi screws (7 places). Prime the back of the upper rails using PR100 wipes and bond the rail guard centrally to the back of the upper rails.

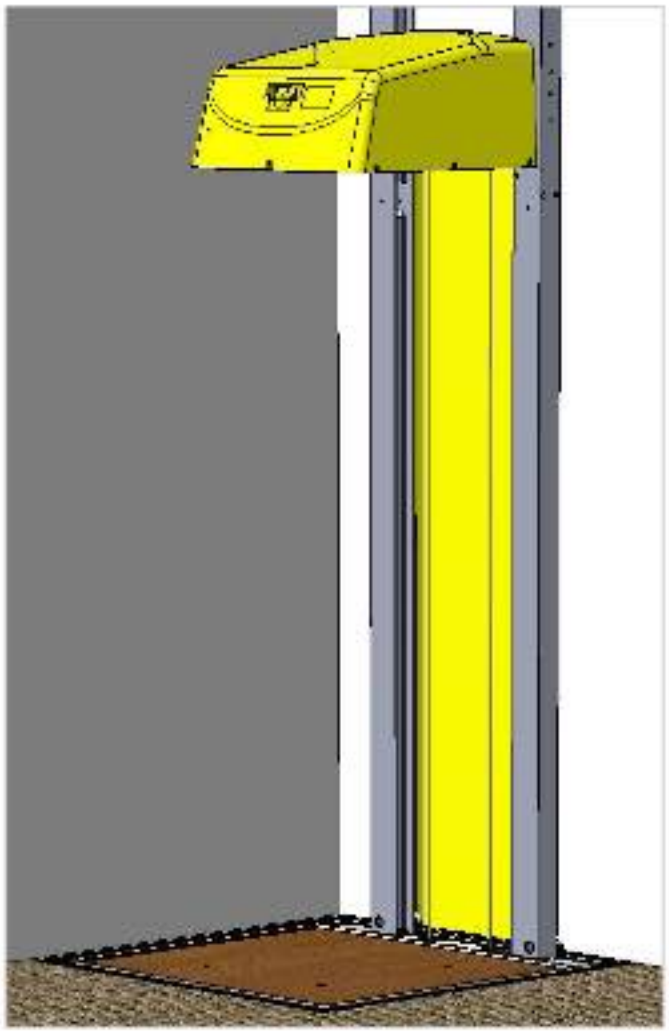



Move the lift upstairs and prime the back of the lower rails using PR100 wipes. Bond the rail guard centrally to the back of the lower rails.

