Registered Office:

Pollock Lifts, Unit1, Sloefield Drive,
Trooperslane Industrial Park,
Carrickfergus, County Antrim, BT38 8GX

25 Series – Residential Elevator – Loadings



Registered Office:

Pollock Lifts, Unit1, Sloefield Drive,
Trooperslane Industrial Park,
Carrickfergus, County Antrim, BT38 8GX

25 Series – Residential Elevator – Loadings

Contents

Description	Page
Lift Loadings – No fixings through ring beam into rear wall	
Notes	**1**
Structural Fixings – Ceiling Fixed	**2**
Structural Fixings – Wall Fixed	**3**
Ceiling Fixed Traction Lift Loadings	**4**
Wall Fixed Traction Lift Loadings	**5**
Ceiling Fixed Hydraulic Lift Loadings	**6**
Wall Fixed Hydraulic Lift Loadings	**7**
Lift Loadings – 3-off Ankerbolts through ring beam into rear wall	
Notes	**8**
Structural Fixings – Ceiling Fixed	**9**
Structural Fixings – Wall Fixed	**10**
Ceiling Fixed Traction Lift Loadings	**11**
Wall Fixed Traction Lift Loadings	**12**
Revision History	**13**

Registered Office:

Pollock Lifts, Unit1, Sloefield Drive,
Trooperslane Industrial Park,
Carrickfergus, County Antrim, BT38 8GX

25 Series – Residential Elevator – Loadings

Notes:

The loads detailed in the next section of the document are worst case scenario's taking into account the following:

- Varying rail lengths
- Asymmetric 60:40 split loading within the lift
- Figures include a 20% allowance for Asymmetric loading
- 500 lb maximum payload (user)
- 760 lb maximum carrier load
- 850x1250x1800 cabin
- No ring beam fixings into rear party wall

Registered Office:

Pollock Lifts, Unit1, Sloefield Drive,
Trooperslane Industrial Park,
Carrickfergus, County Antrim, BT38 8GX

25 Series – Residential Elevator – Loadings

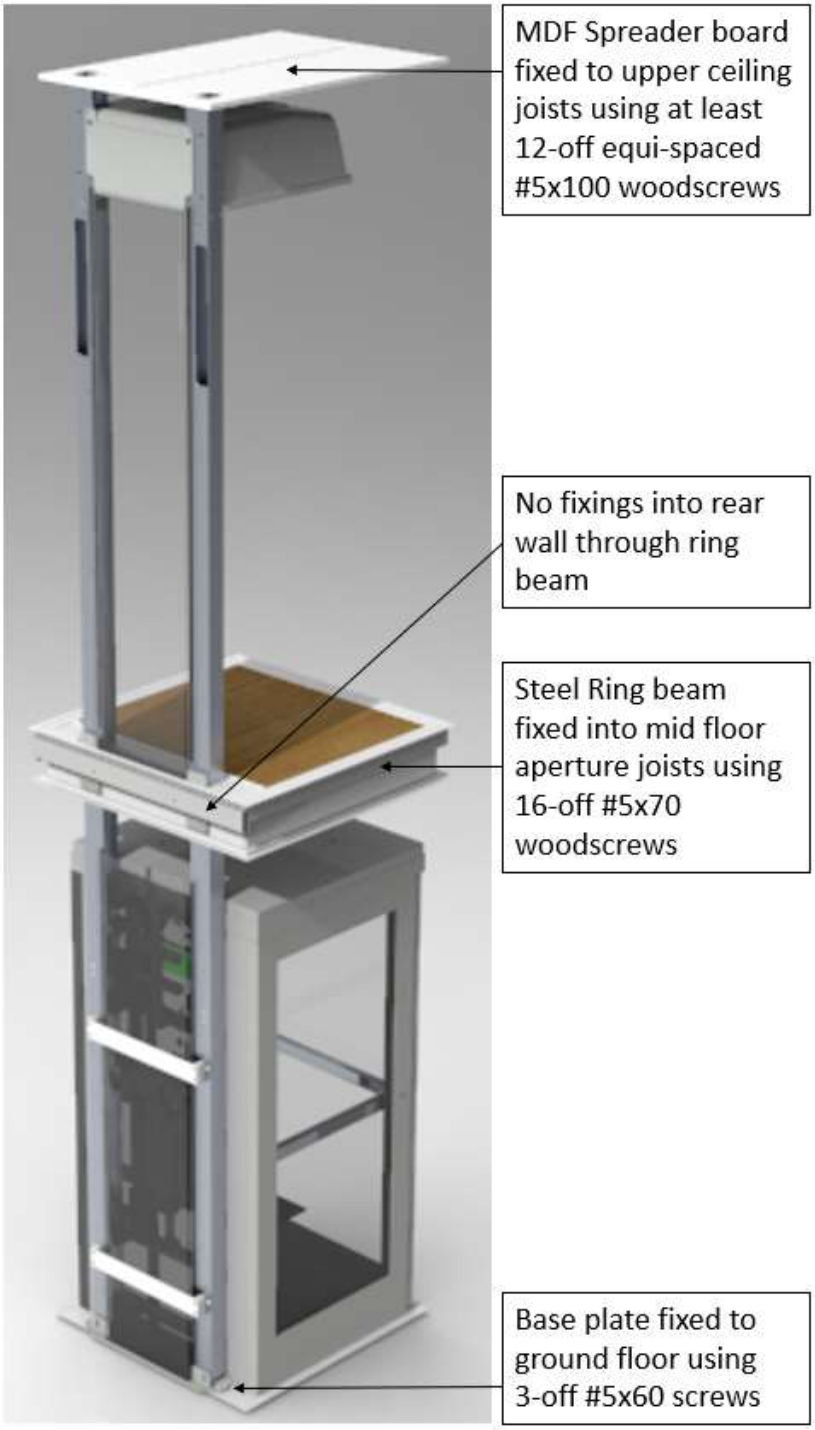

Structural fixings with spreader board

(No fixings through ring beam into rear wall)

Registered Office:

Pollock Lifts, Unit1, Sloefield Drive,
Trooperslane Industrial Park,
Carrickfergus, County Antrim, BT38 8GX

25 Series – Residential Elevator – Loadings

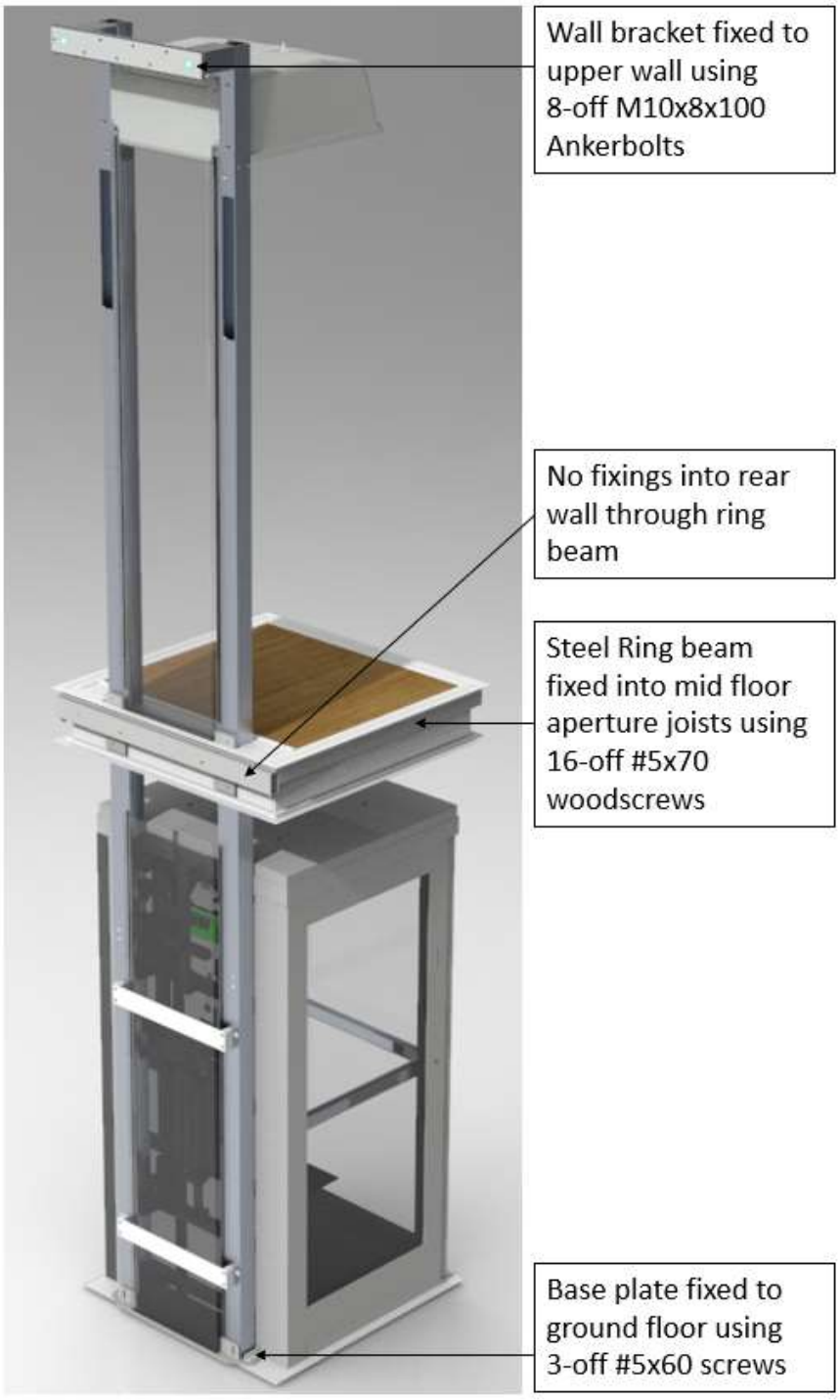

Structural fixings with wall bracket

(No fixings through ring beam into rear wall)

Registered Office:

Pollock Lifts, Unit1, Sloefield Drive,
Trooperslane Industrial Park,
Carrickfergus, County Antrim, BT38 8GX

25 Series – Residential Elevator – Loadings

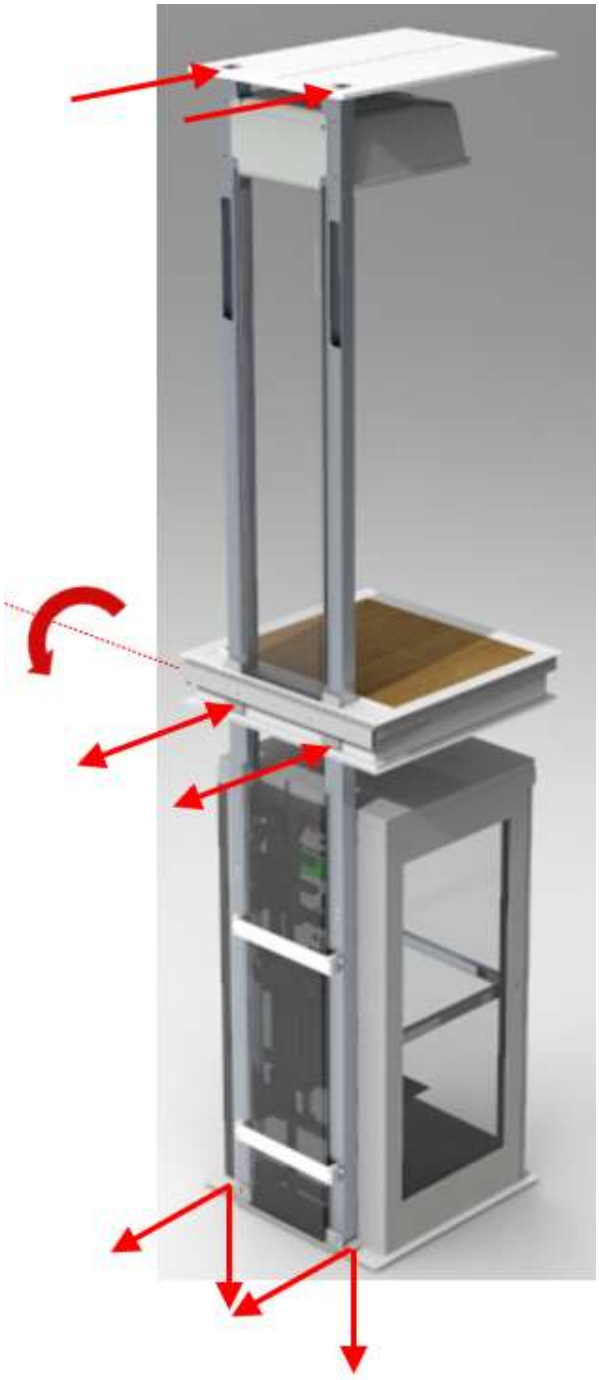

Description	Ceiling fixed Traction loadings			
	X (lbf)	Y (lbf)	Z (lbf)	MX (lb-ft)
Base Plate	0	-1550	759	0
Ring beam	0	0	710 -733	3329
Spreader Plate	0	0	639	0

+ve = compressive force on support (pushing into wall)

-ve = tensile force on support (pulling away from wall)

Where there are both +ve and -ve values the loading changes direction. For example, as the lift moves from the lower rails to the upper rails and from -ve loading to +ve loading respectively.

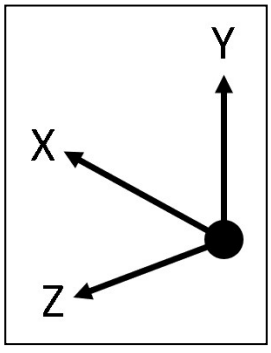

Ceiling Fixed Traction Lift Loadings

(No fixings through ring beam into rear wall)

Registered Office:

Pollock Lifts, Unit1, Sloefield Drive,
Trooperslane Industrial Park,
Carrickfergus, County Antrim, BT38 8GX

25 Series – Residential Elevator – Loadings

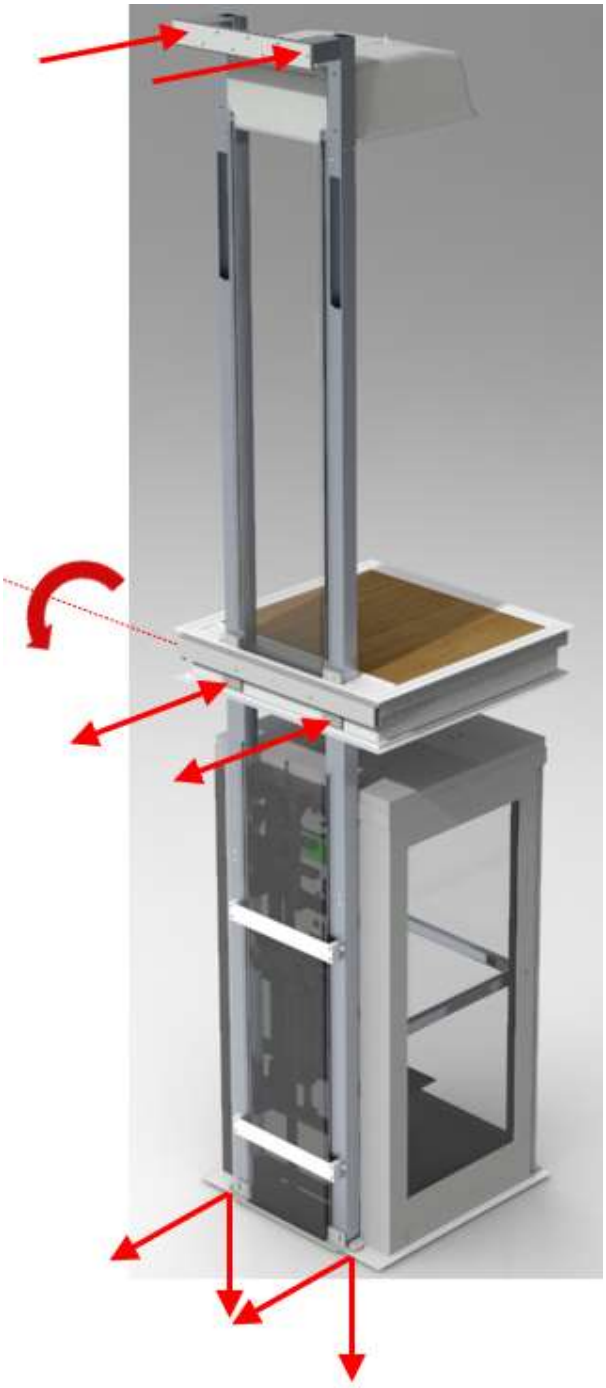

Description	Wall fixed Traction loadings			
	X (lbf)	Y (lbf)	Z (lbf)	MX (lb-ft)
Base Plate	0	-1550	759	0
Ring beam	0	0	710 -733	3329
Wall fixing	0	0	710	0

+ve = compressive force on support (pushing into wall)

-ve = tensile force on support (pulling away from wall)

Where there are both +ve and -ve values the loading changes direction. For example, as the lift moves from the lower rails to the upper rails and from -ve loading to +ve loading respectively.

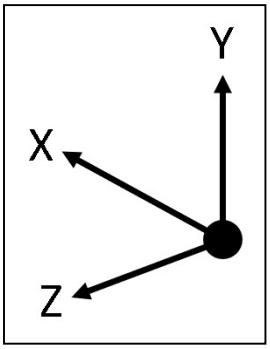

Wall Fixed Traction Lift Loadings

(No fixings through ring beam into rear wall)

Registered Office:

Pollock Lifts, Unit1, Sloefield Drive,
Trooperslane Industrial Park,
Carrickfergus, County Antrim, BT38 8GX

25 Series – Residential Elevator – Loadings

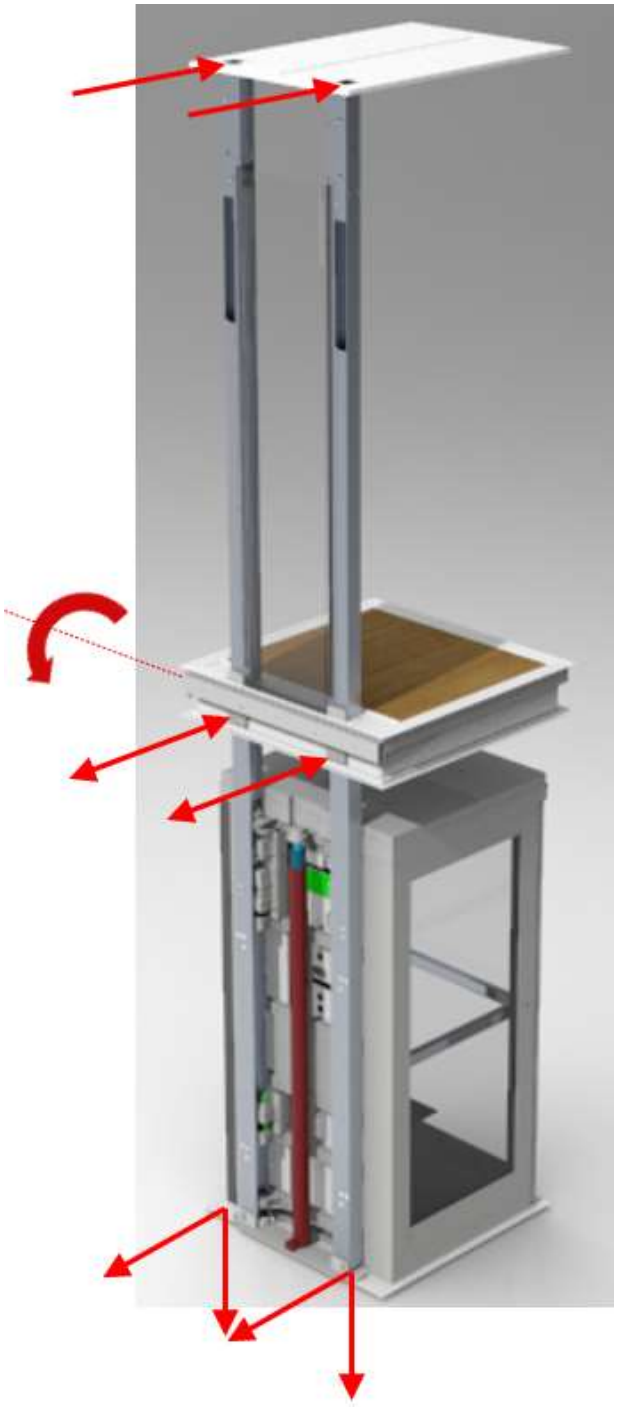

Description	Ceiling fixed Hydraulic loadings			
	X (lbf)	Y (lbf)	Z (lbf)	MX (lb-ft)
Base Plate	0	-1550	764	0
Ring beam	0	0	702 -764	3405
Spreader Plate	0	0	586	0

+ve = compressive force on support (pushing into wall)

-ve = tensile force on support (pulling away from wall)

Where there are both +ve and -ve values the loading changes direction. For example, as the lift moves from the lower rails to the upper rails and from -ve loading to +ve loading respectively.

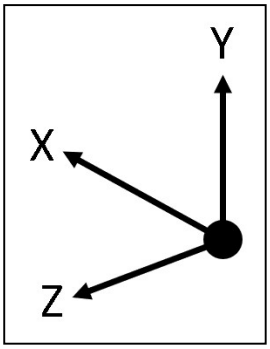

Ceiling Fixed Hydraulic Lift Loadings

(No fixings through ring beam into rear wall)

Registered Office:

Pollock Lifts, Unit1, Sloefield Drive,
Trooperslane Industrial Park,
Carrickfergus, County Antrim, BT38 8GX

25 Series – Residential Elevator – Loadings

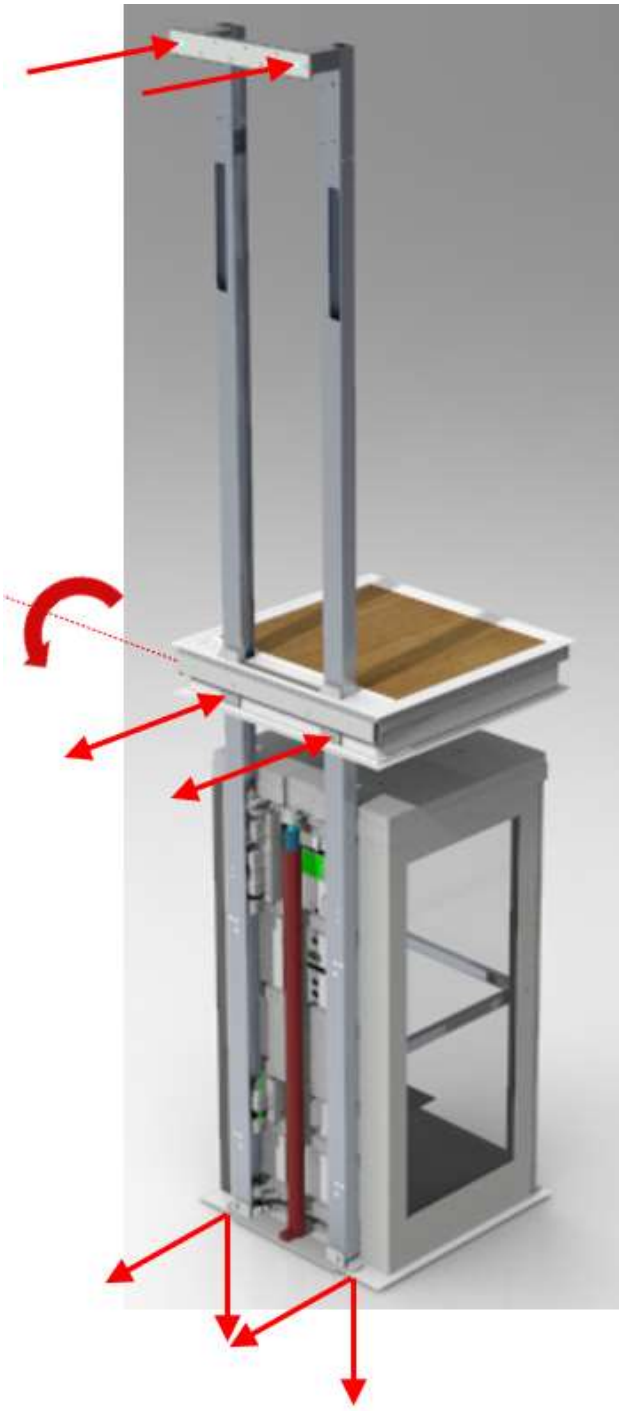

Description	Wall fixed Hydraulic loadings			
	X (lbf)	Y (lbf)	Z (lbf)	MX (lb-ft)
Base Plate	0	-1550	764	0
Ring beam	0	0	702 -764	3405
Wall fixing	0	0	702	0

+ve = compressive force on support (pushing into wall)

-ve = tensile force on support (pulling away from wall)

Where there are both +ve and -ve values the loading changes direction. For example, as the lift moves from the lower rails to the upper rails and from -ve loading to +ve loading respectively.

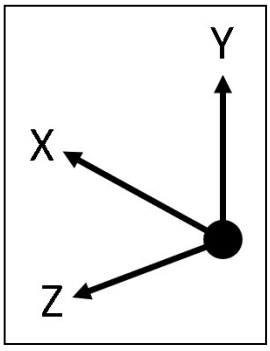

Wall Fixed Hydraulic Lift Loadings

(No fixings through ring beam into rear wall)

Registered Office:

Pollock Lifts, Unit1, Sloefield Drive,
Trooperslane Industrial Park,
Carrickfergus, County Antrim, BT38 8GX

25 Series – Residential Elevator – Loadings

Notes:

The loads detailed in the next section of the document are worst case scenario's taking into account the following:

- Varying rail lengths
- Asymmetric 60:40 split loading within the lift
- Figures include a 20% allowance for Asymmetric loading
- 500 lb maximum payload (user)
- 760 lb maximum carrier load
- 850x1250x1800 cabin
- 3-off M10x8x100 Ankerbolt fixings through ring beam into rear party wall

Ankerbolt (JAB08/10100ETA) specification for reference:

https://www.dropbox.com/s/8o9jowzscmhlrq4/ETA_Ankerbolt_RE03.pdf?dl=0

Hydraulic loadings are unchanged.

Registered Office:

Pollock Lifts, Unit1, Sloefield Drive,
Trooperslane Industrial Park,
Carrickfergus, County Antrim, BT38 8GX

25 Series – Residential Elevator – Loadings



Structural fixings with spreader board

(Fixings through ring beam into rear wall)

Registered Office:

Pollock Lifts, Unit1, Sloefield Drive,
Trooperslane Industrial Park,
Carrickfergus, County Antrim, BT38 8GX

25 Series – Residential Elevator – Loadings

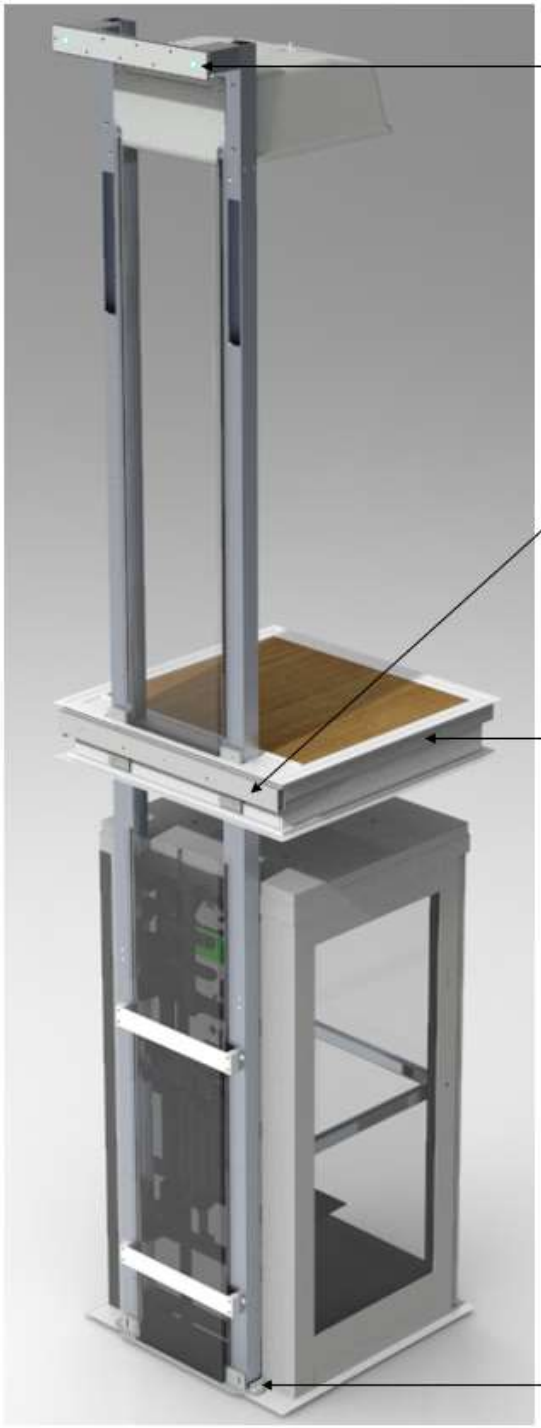

Structural fixings with wall bracket

(Fixings through ring beam into rear wall)

Registered Office:

Pollock Lifts, Unit1, Sloefield Drive,
Trooperslane Industrial Park,
Carrickfergus, County Antrim, BT38 8GX

25 Series – Residential Elevator – Loadings

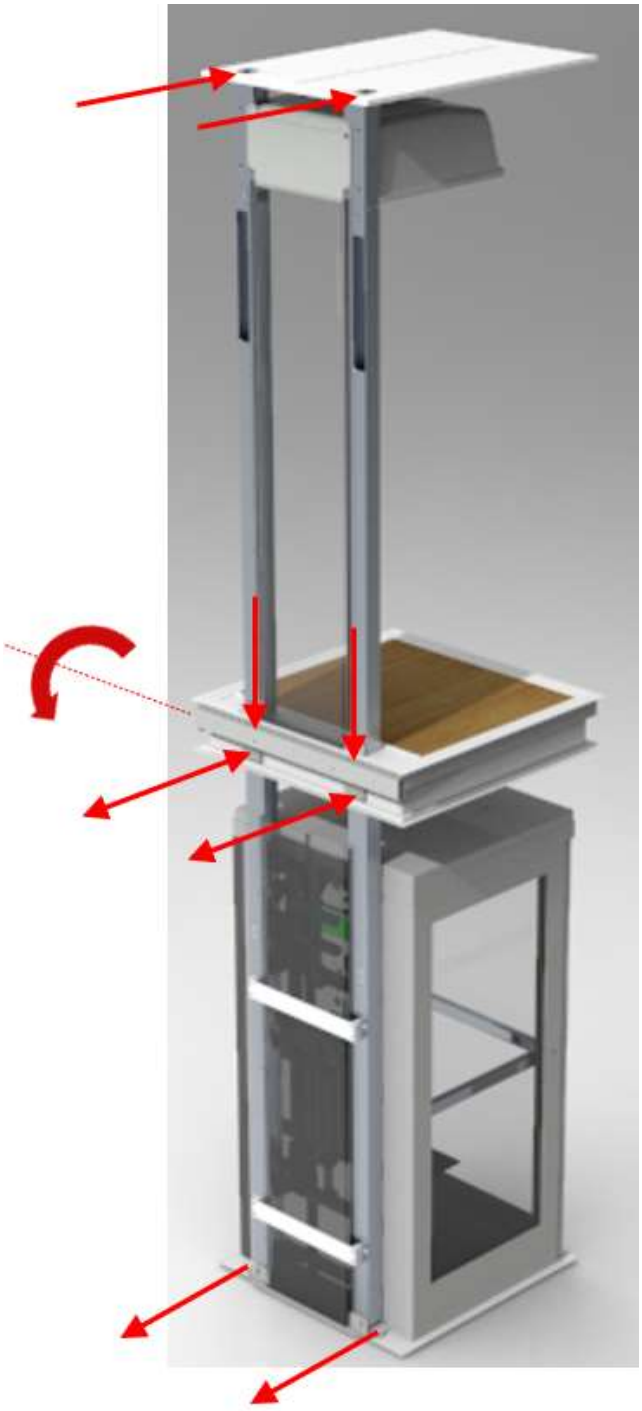

Description	Ceiling fixed Traction loadings			
	X (lbf)	Y (lbf)	Z (lbf)	MX (lb-ft)
Base Plate	0	0	759	0
Ring beam	0	-1550	710 -733	3329
Spreader Plate	0	0	639	0

+ve = compressive force on support (pushing into wall)

-ve = tensile force on support (pulling away from wall)

Where there are both +ve and -ve values the loading changes direction. For example, as the lift moves from the lower rails to the upper rails and from -ve loading to +ve loading respectively.

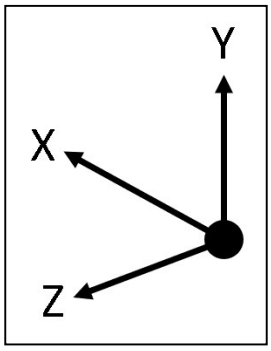

Ceiling Fixed Traction Lift Loadings

(Fixings through ring beam into rear wall)

Registered Office:

Pollock Lifts, Unit1, Sloefield Drive,
Trooperslane Industrial Park,
Carrickfergus, County Antrim, BT38 8GX

25 Series – Residential Elevator – Loadings

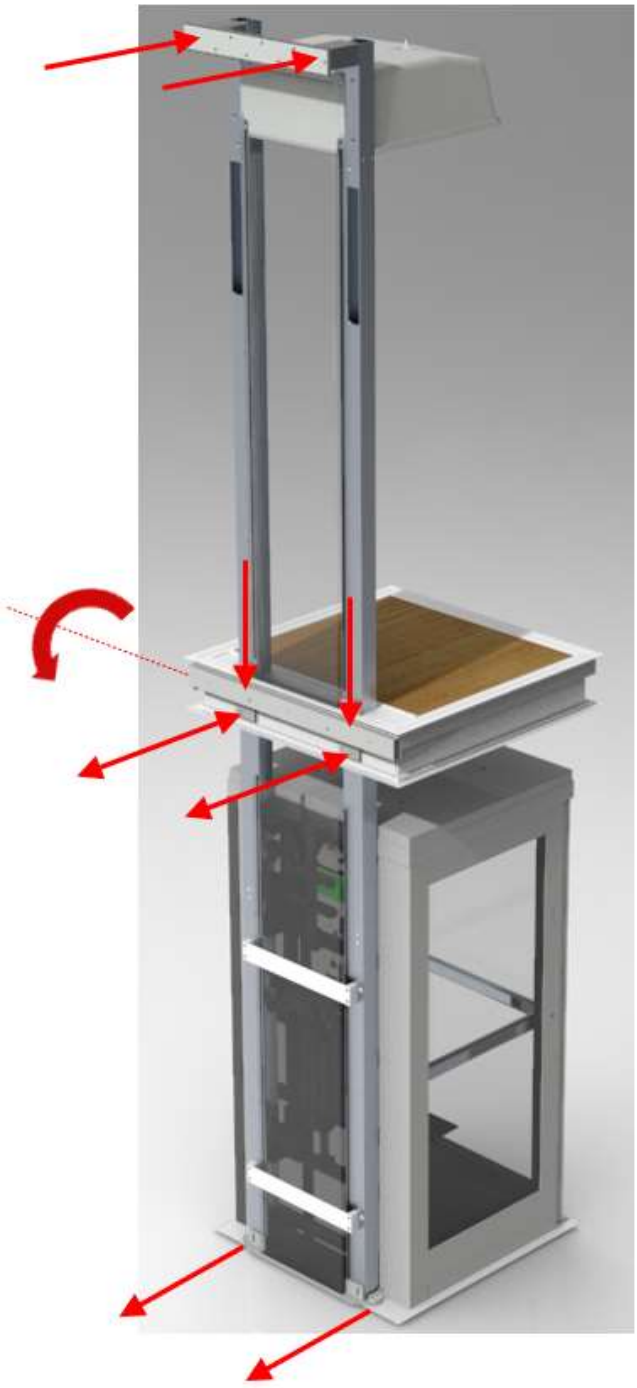

Description	Wall fixed Traction loadings			
	X (lbf)	Y (lbf)	Z (lbf)	MX (lb-ft)
Base Plate	0	0	759	0
Ring beam	0	-1550	710 -733	3329
Wall fixing	0	0	710	0

+ve = compressive force on support (pushing into wall)

-ve = tensile force on support (pulling away from wall)

Where there are both +ve and -ve values the loading changes direction. For example, as the lift moves from the lower rails to the upper rails and from -ve loading to +ve loading respectively.

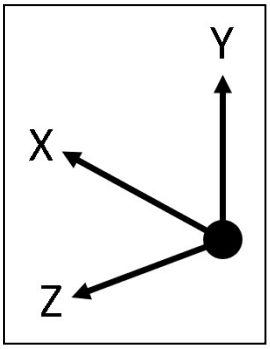

Wall Fixed Traction Lift Loadings

(Fixings through ring beam into rear wall)

Registered Office:

Pollock Lifts, Unit1, Sloefield Drive,
Trooperslane Industrial Park,
Carrickfergus, County Antrim, BT38 8GX

Document Revision History

Issue:	Change No.	Description of Change:	Initials:	Date:
A	------	Initial Release	PTM	15/10/20
B	CR1190	Revised loadings assuming no fixings into rear party wall. Units changed from [N & Nmm] to [kN & kNm]	PTM	16/08/21
C	CR1194	Pages 8-12 added for loadings with ring beam fixings into rear wall. (Release of US version in Imperial units)	PTM	24/08/21