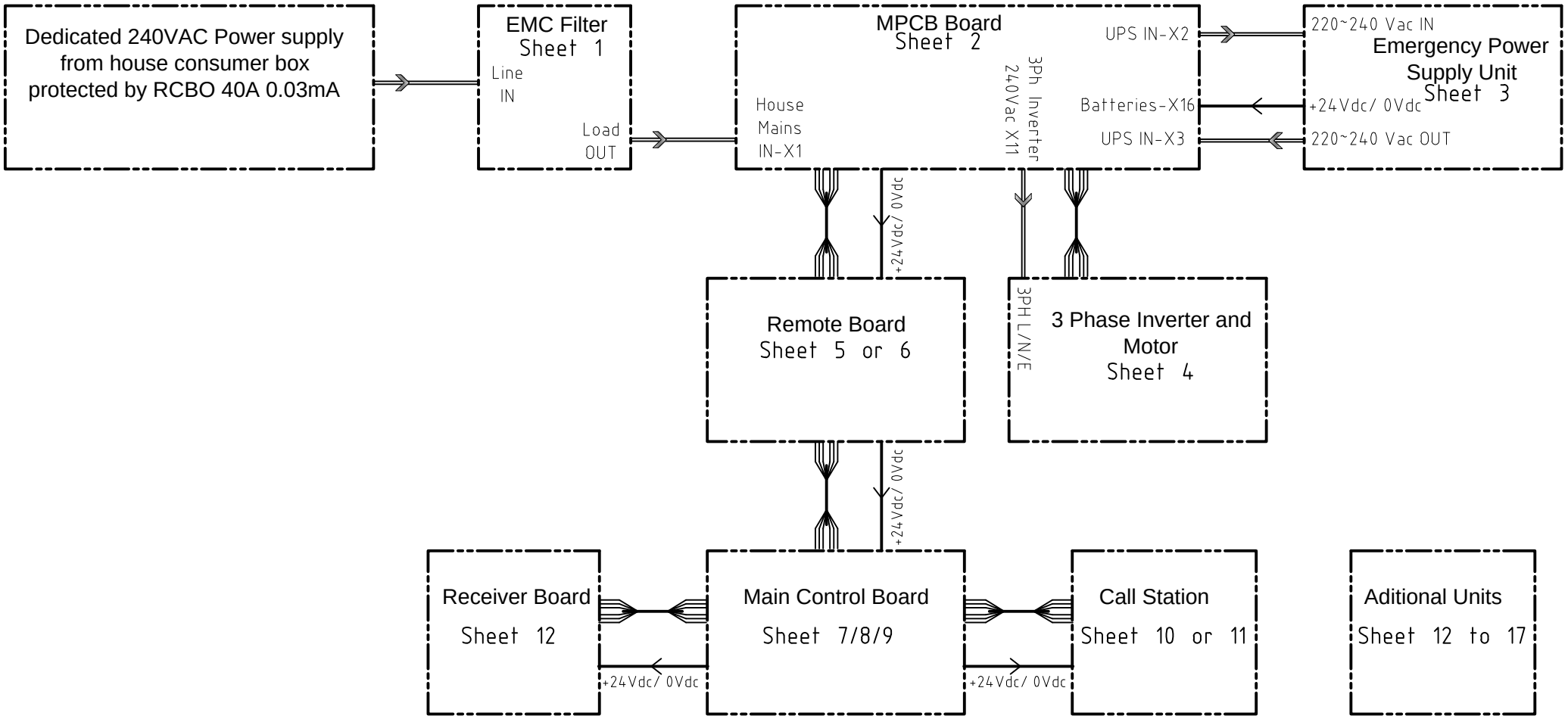

20/25 ser Wiring Block Diagram

Drawing Name :		Type: block diagram	
Boards Block Diagram			
Drawing Number :	20-Block 1		
Author :	R. Pazusis		
Checked by :			
Revision : v.C01	Date : 19/07/21	Page : 1 of 21	

pollock Lifts
unit 1, Sloefield Drive, Carrickfergus
BT38 8GX

WARNING!!

Lift connection to 240VAC power supply must be completed by a qualified electrician

Dedicated 240VAC Power supply from house consumer box protected by RCBO 40A 0.03mA

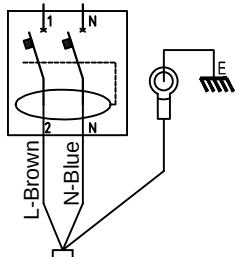

RCBO
40A, 0.03mA

13A Fuse / 240Vac Spur Power Switch for lift

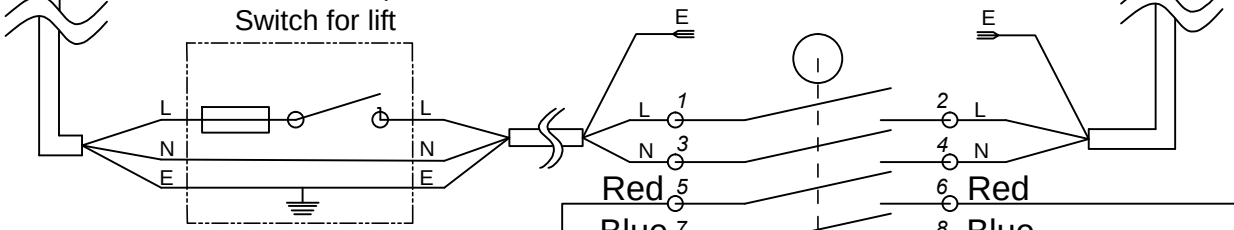

Main Power Kill Switch (Service Switch) 25A

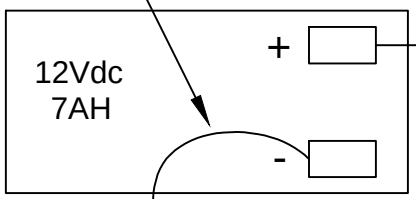

E
All E-earth wires are attached to Earth block

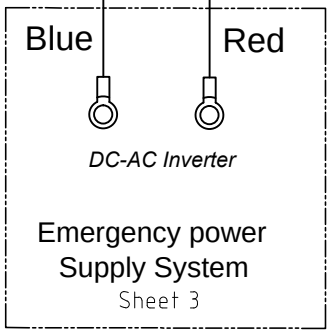

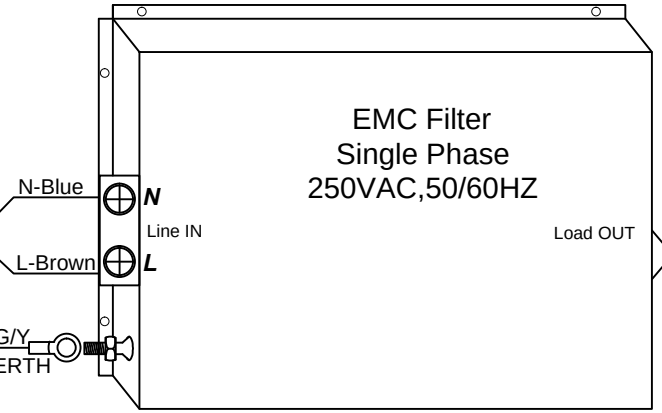

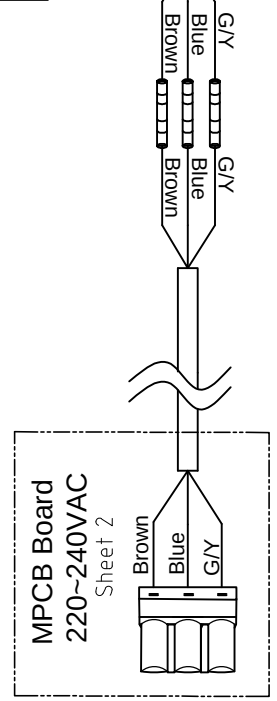

Mains Power Supply

Drawing Name :		Type: wiring diagram	
Mains Power supply to the lift controls			
Drawing Number :	20-Sheet 1		
Author :	R. Pazusis		
Checked by :			
Revision : v.C01	Date : 19/07/21	Page : 2 of 21	

pollock Lifts
unit 1, Sloefield Drive, Carrickfergus
BT38 8GX

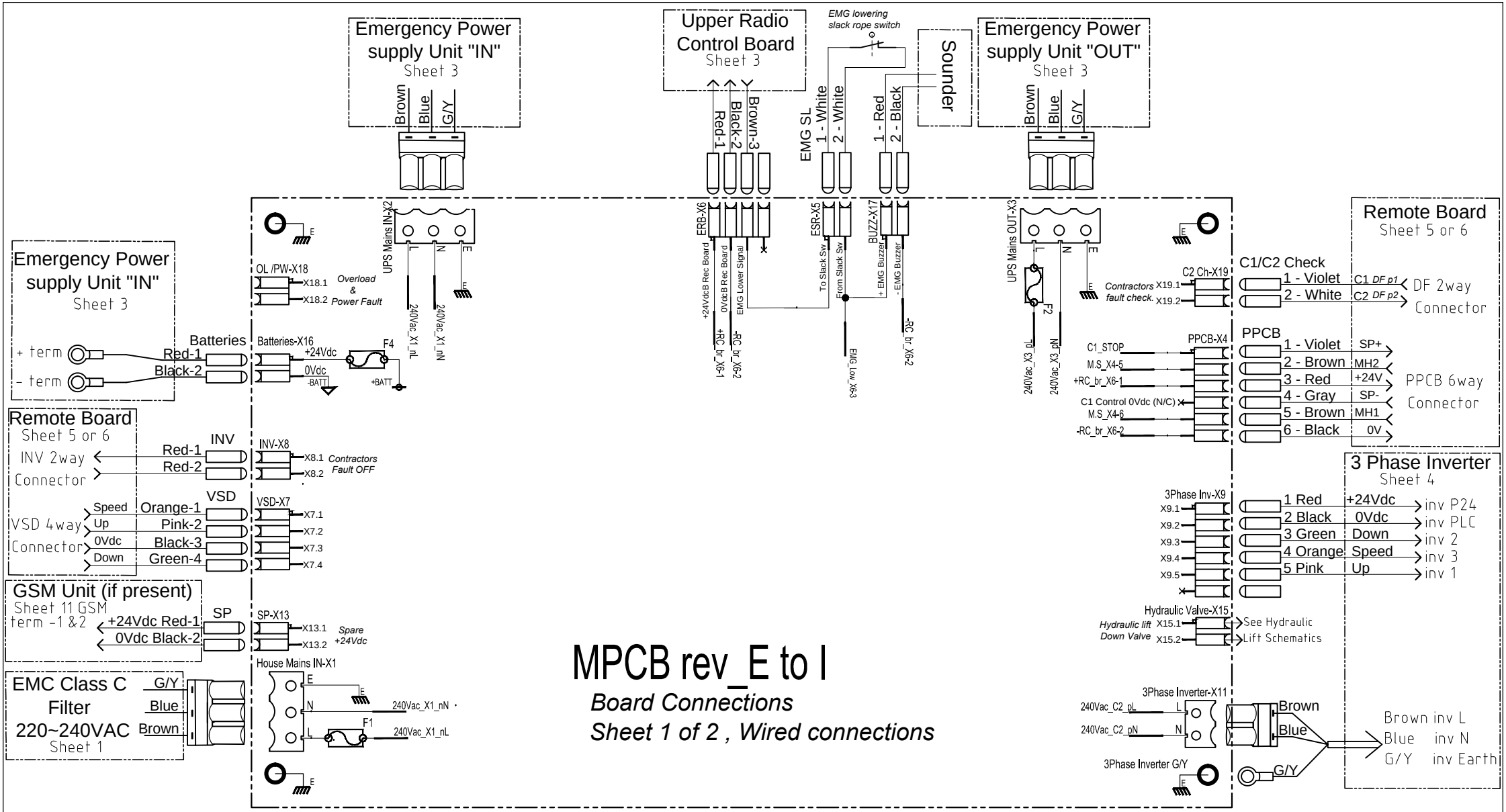

MPCB_I_v002

Part Number: 20700555

Drawing Name :		Type: wiring diagram	
Mains Power Control Board rev_I.v002			
Drawing Number :	20-Sheet 2.1wr		
Author :	R. Pazusis		
Checked by :			
Revision : v.C01	Date : 19/07/21	Page : 3 of 21	

pollock Lifts
unit 1, Sloefield Drive, Carrickfergus
BT38 8GX

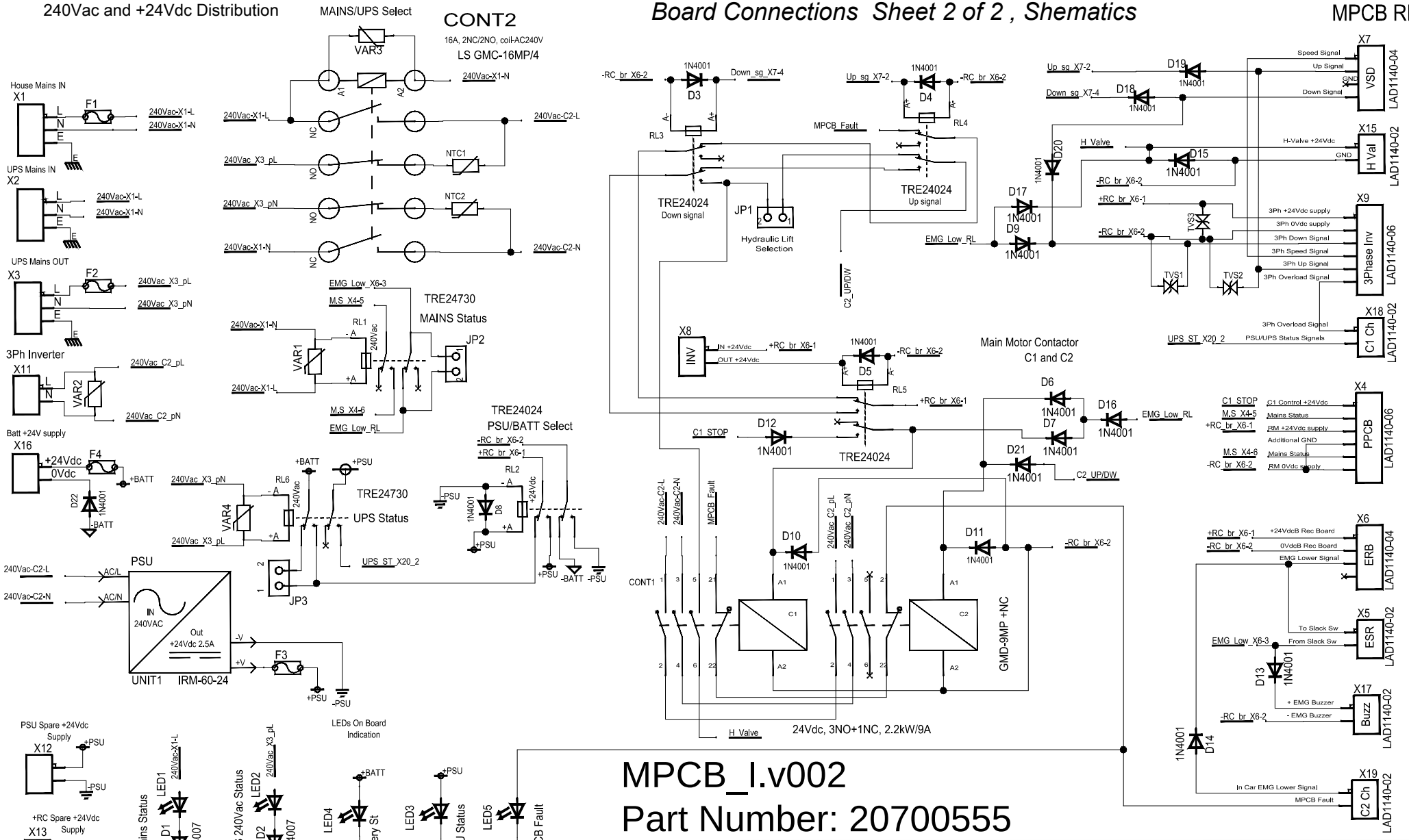
240Vac and +24Vdc Distribution
MAINS/UPS Select
CONT2
16A, 2NC/2NO, coil-AC240V
LS GMC-16MP/4
Board Connections Sheet 2 of 2 , Shematics
MPCB REV_I
House Mains IN
UPS Mains IN
UPS Mains OUT
3Ph Inverter
Batt +24V supply
TRE24730
MAINS Status
TRE24730
UPS Status
TRE24024
PSU/BATT Select
TRE24024
Down signal
TRE24024
Up signal
Hydraulic Lift
Selection
Main Motor Contactor
C1 and C2
GMD-9MP +NC
24Vdc, 3NO+1NC, 2.2kW/9A
PSU
IN
240VAC
Out
+24Vdc 2.5A
UNIT1 IRM-60-24
PSU Spare +24Vdc
Supply
+RC Spare +24Vdc
Supply
Battery Spare
+24Vdc Supply
LEDs On Board
Indication
Mains Status
UPS 240Vac Status
Battery St
PSU Status
MPCB Fault
MPCB_I.v002
Part Number: 20700555
Drawing Name :
Type: Schematics
Mains Power Control Board rev_I.v002
Drawing Number :
20-Sheet 2.2sm
Author : R. Pazusis
Checked by :
Revision : v.C01
Date : 19/07/21
Page : 4 of 21
pollock Lifts
unit 1, Sloefield Drive, Carrickfergus
BT38 8GX

MPCB Connections/Led's

X1 - 220~240 VAC Input from House Supply
X2 - 220~240 VAC Supply to Emergency Power Supply unit / Charger Supply
X3 - 220~240 VAC Supply from Emergency Power Supply unit (UPS/Inverter)
X4 - PPCB "Power to Remote and Main PCB, EMG Line, Mains Check
X5 - ESR "Emergency Lowering Slack Rope Switch Input"
X6 - ERB "Emergency Receiver Board" for Receiver board fitted on motor mount. For board power and EMG lowering signal (not in use currently)
X7 - VSD " Variable Speed Drive" UP,DOWN,SPEED signals from Main board
X8 - INV "Inverter" Switches OFF both contactors C1 and C2 in case fault on one of them
X9 - 3Phase Inv "3 Phase Control Signals" UP,DOWN,SPEED, +24Vdc and 0Vdc supply
X11 - 3Phase Inverter "220~240 Vac supply to the 3 Phase Inverter"
X12 - +24Vdc/0Vdc spare supply from PSU
X13 - +24Vdc/0Vdc spare supply from PSU or Batteries
X14 - +24Vdc/0Vdc spare supply from Batteries
X15 - Hydraulic Valve " Hydraulic Down Valve control" for Hydraulic lifts only
X16 - Batteries "+24Vdc/0Vdc supply from batteries"
X17 - Buzz "Emergency Lowering Buzzer"
X18 - Over Load and Power supply status (not in use on current version)
X19 - Contactor 1 and Contactor 2 state check

FUSES

F1 - EU version 6.3A.T Mains Power 220~240Vac supply from Consumer Unit, US version 12.5A.T Mains Power 110~115Vac supply from Consumer Unit
F2 - 10A.T 220~240Vac/110~115Vac from EPS unit
F3 - 3.15A.T 24Vdc Power from PSU
F4 - 3.15A.T 24Vdc Power from Batteries

LED's

Led 1 - 240/110Vac Mains Power Status (fuse F1)
Led 2 - 240/110Vac Inverter Power Status (fuse F2)
Led 3 - 24Vdc PSU Power Supply Status (fuse F3)
Led 4 - 24Vdc Batteries Power Supply Status (fuse F4)
Led 5 - MPCB Board Fault - ON when lift stationary, OFF when lift moving

MPCB G-I revision description

MPCB revision G - I board can be set up with UPS or Inverter/Charger back up system.
In UPS system set up, UPS charges batteries and supplies 240Vac to the lift in case of power blackout.
Inverter\Charger system - Inverter supplies 240Vac and 2A Charger chargers batteries.
In US version Inverter supplies 115Vac, 2A Charger chargers batteries.

Led 5 - MPCB Board Fault - This light shows status of two big contactors (STOP/UP-DOWN), UP/DOWN relays and INV relay. If one of this unit is not changing contact status Led 5 will remain OFF after lift parked. "Contactor Fault" message will be displayed on LCD screen. In this case MPCB board will be faulty and needs to be replaced.
If lift is parked and "Contactor Fault" message is present but Led 5 is ON, when MPCB board is healthy and problem lies in some other part, such as X19 connection or RM board.

MPCB board revision I v002 are compatible with all previous MPCB board versions. Changes are required to X19 or X18 and X5 connections, please see document "MPCB E - I version description vs C version" for full details.

Drawing Name :		Type: Schematics	pollock Lifts
Mains Power Control Board rev_I.v002			
Drawing Number :	20-Sheet 2.3dc		
Author : R. Pazusis			unit 1, Sloefield Drive, Carrickfergus BT38 8GX
Checked by :			
Revision : v.C01	Date : 19/07/21	Page : 5 of 21	

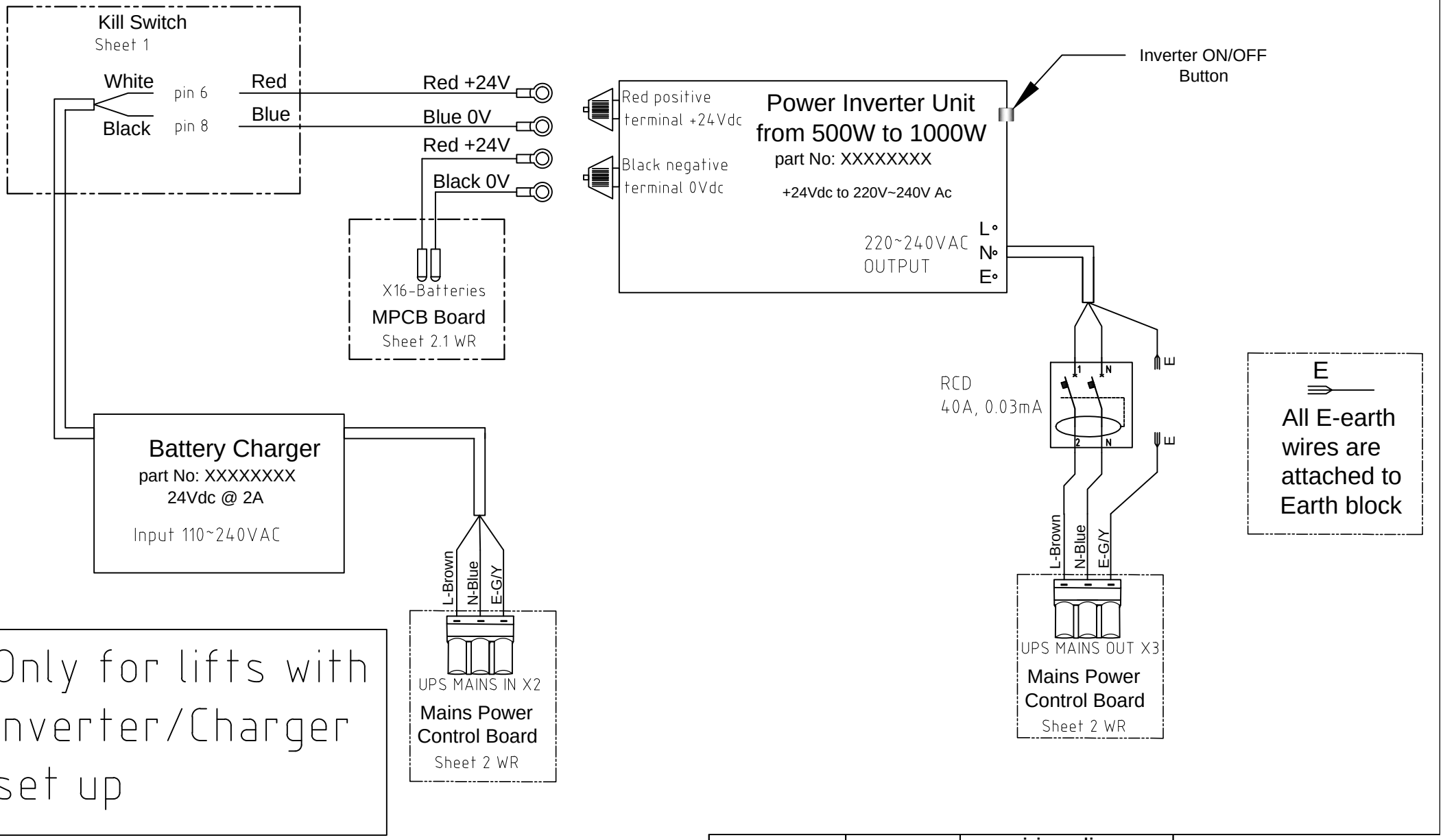

Batteries, Emergency power supply unit - Inverter+Charger

Part Number: 90100583/90100679

Drawing Name :	Type: wiring diagram	
Batteries and EPS unit		
Drawing Number :	20-Sheet 3.1	
Author : R. Pazusis		
Checked by :		
Revision : v.C01	Date : 19/07/21	Page : 6 of 21

pollock Lifts

unit 1, Sloefield Drive, Carrickfergus
BT38 8GX

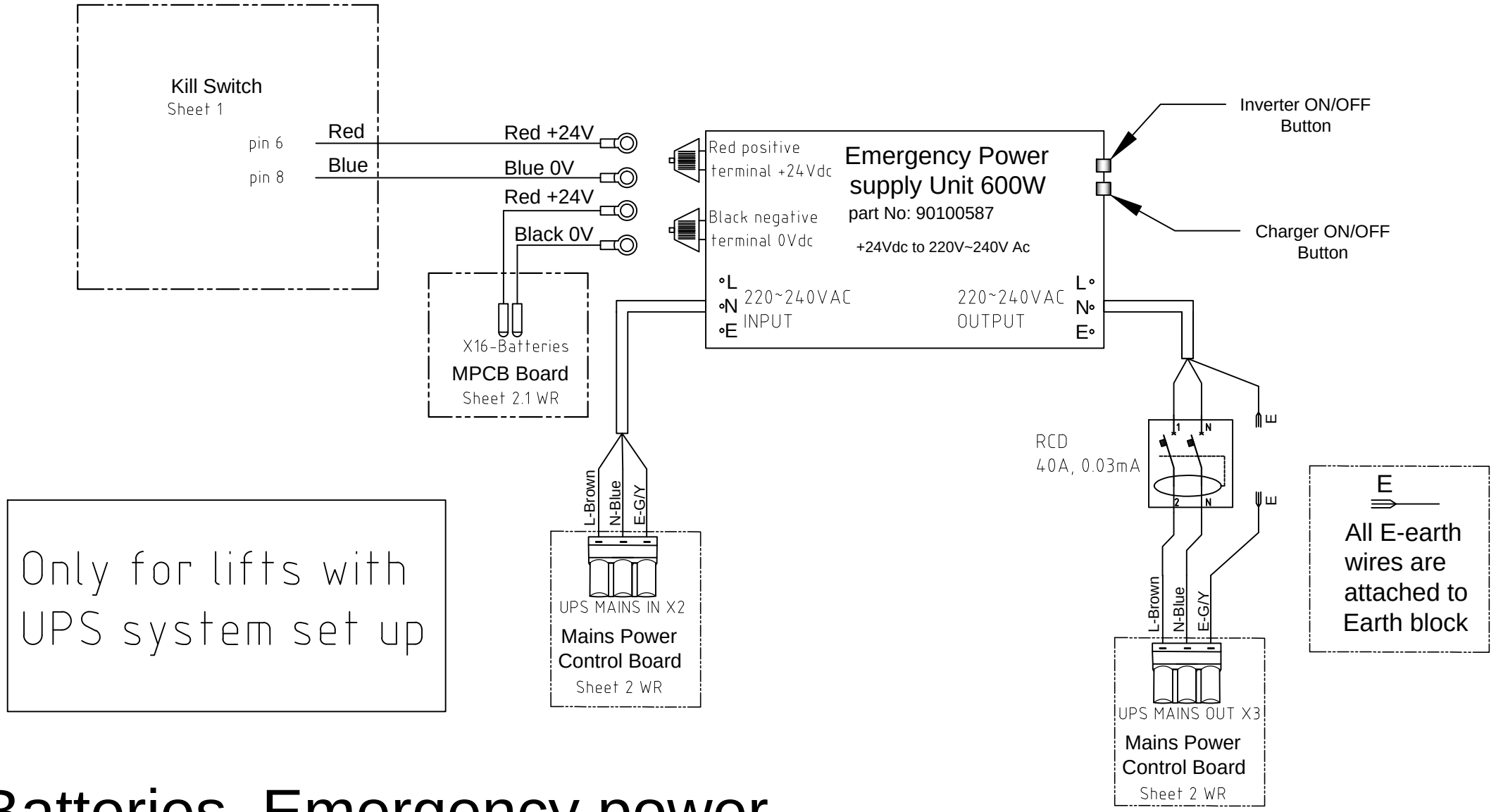

Batteries, Emergency power supply unit - UPS

Part Number: 90100587

Drawing Name :		Type: wiring diagram	
Batteries and EPS unit			
Drawing Number :	20-Sheet 3.2		
Author :	R. Pazusis		
Checked by :			
Revision : v.C01	Date : 19/07/21	Page : 7 of 21	

pollock Lifts
unit 1, Sloefield Drive, Carrickfergus
BT38 8GX

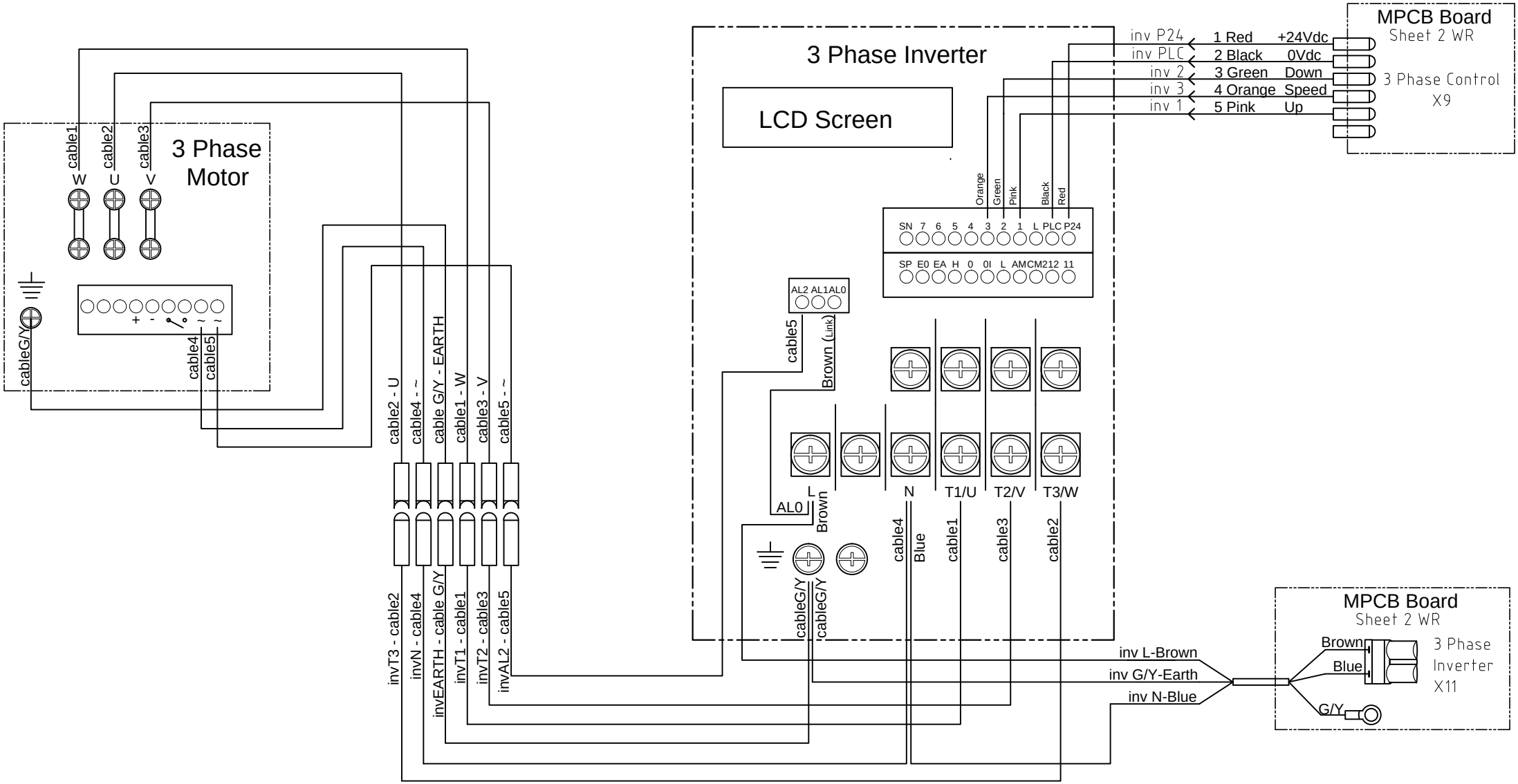

3 Phase Inverter & Main Motor

Drawing Name :		Type: wiring diagram	
3 Phase Motor & 3 Phase Inverter			
Drawing Number :	20-Sheet 4		
Author :	R. Pazusis		
Checked by :			
Revision : v.C01	Date : 19/07/21	Page : 8 of 21	

pollock Lifts
unit 1, Sloefield Drive, Carrickfergus
BT38 8GX

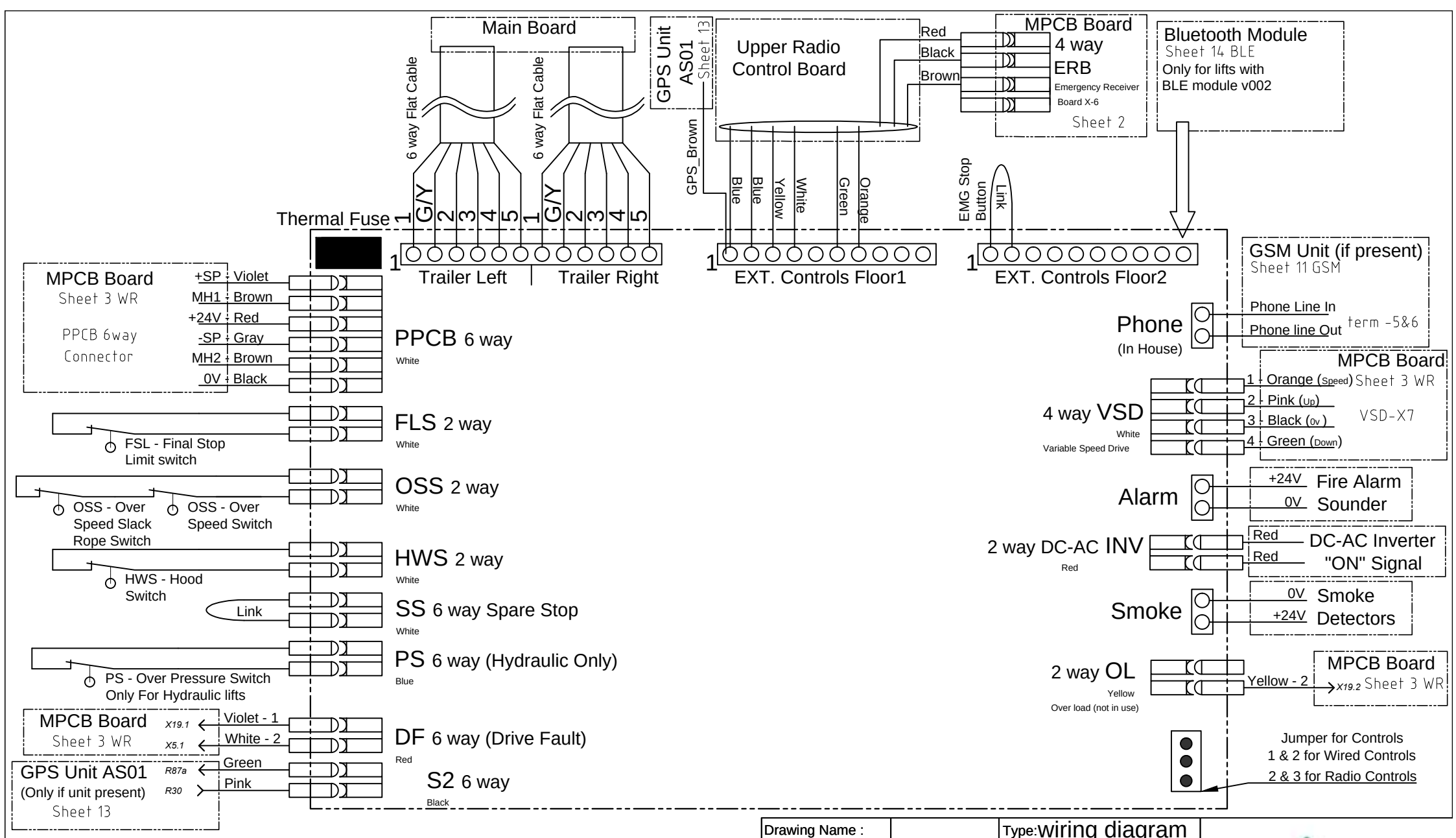

RM Board (Radio Controls)

Part Number: 20700522

Drawing Name :	RM Board Connection	Type: wiring diagram	
Drawing Number :	20-Sheet 5		
Author :	R. Pazusis		
Checked by :			
Revision : v.C01	Date : 19/07/21	Page : 9 of 21	

pollock Lifts
unit 1, Sloefield Drive, Carrickfergus
BT38 8GX

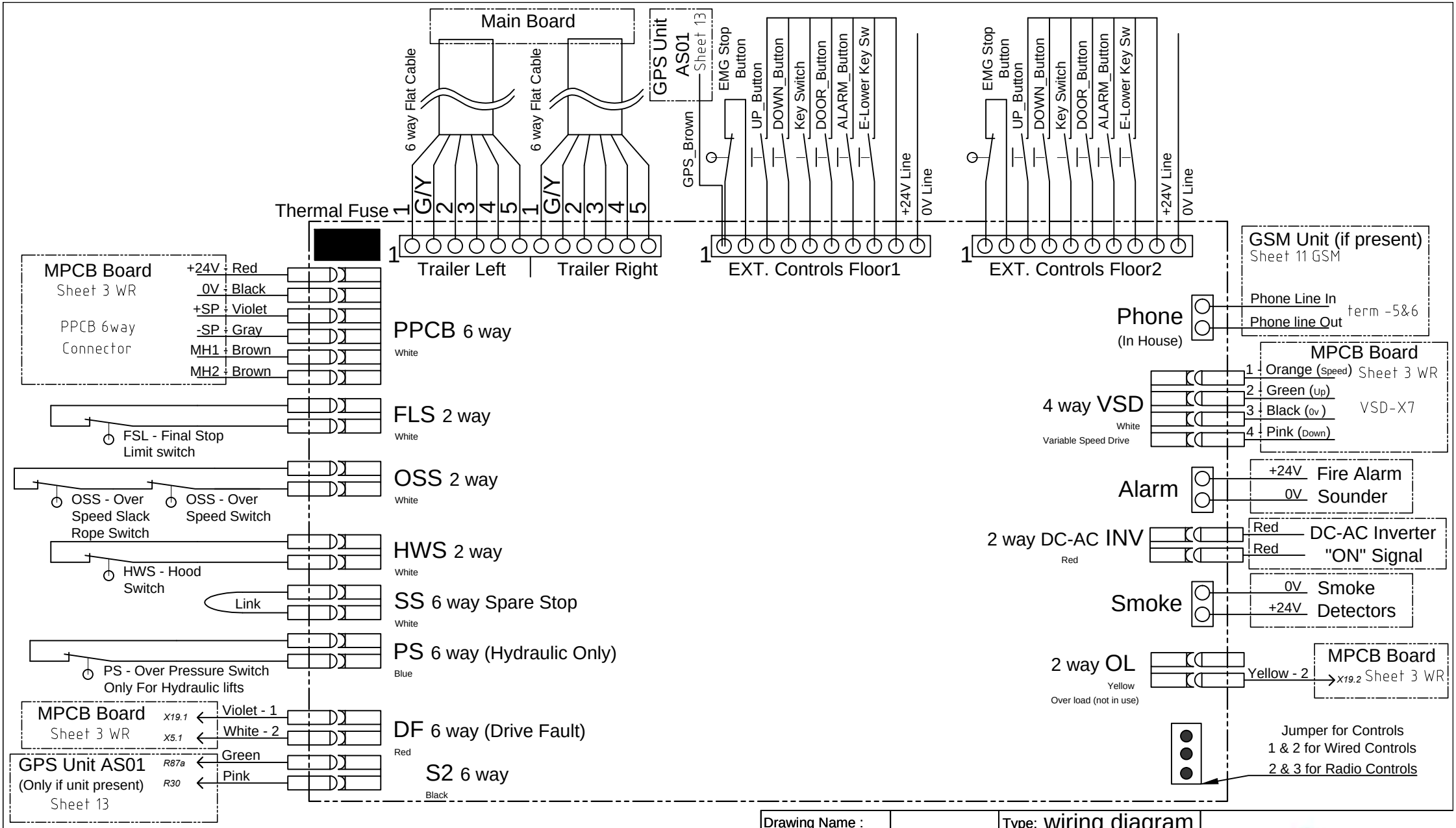

RM Board (Wired Controls)

Part Number: 20700522

Drawing Name :	RM Board Connection	Type: wiring diagram	
Drawing Number :	20-Sheet 6		
Author :	R. Pazusis		
Checked by :			
Revision : v.C01	Date : 19/07/21	Page : 10 of 21	

pollock Lifts

unit 1, Sloefield Drive, Carrickfergus
BT38 8GX

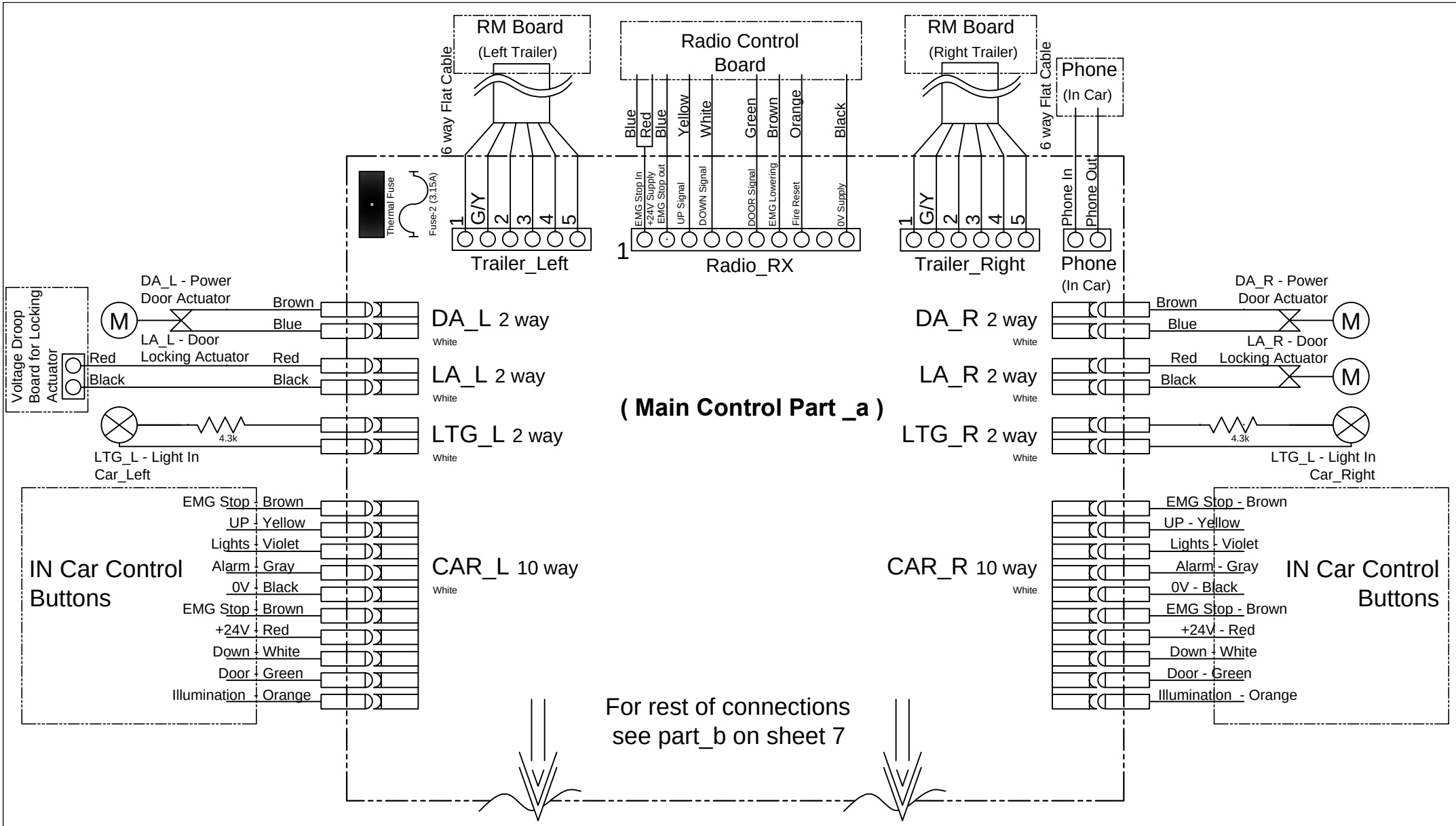

Main PCB (Main Control Part_a)

Part Number: 20700526

Drawing Name :	Sheet 7	Type: wiring diargam	
Main Board upper part			
Drawing Number :	20-Sheet 7a		
Author :	R. Pazusis		
Checked by :			
Revision : v.C01	Date : 19/07/21	Page : 11 of 21	

pollock Lifts
unit 1, Sloefield Drive, Carrickfergus
BT38 8GX

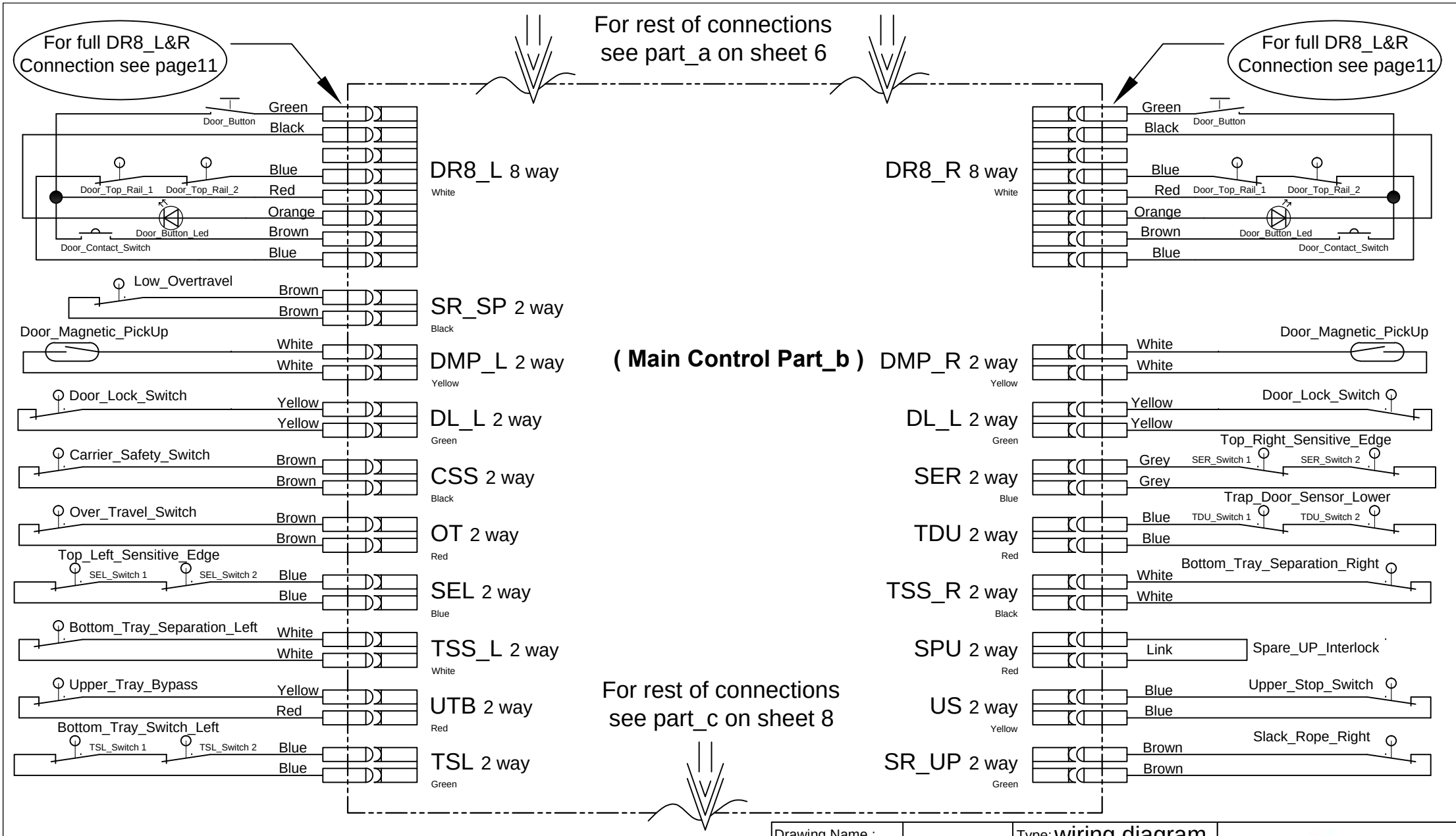

Main PCB (Main Control Part_b)

Part Number: 20700526

Drawing Name :		Type: wiring diagram	
Main Board middle part			
Drawing Number :	20-Sheet 8b		
Author :	R. Pazusis		
Checked by :			
Revision : v.C01	Date : 19/07/21	Page : 12 of 21	

pollock Lifts
unit 1, Sloefield Drive, Carrickfergus
BT38 8GX

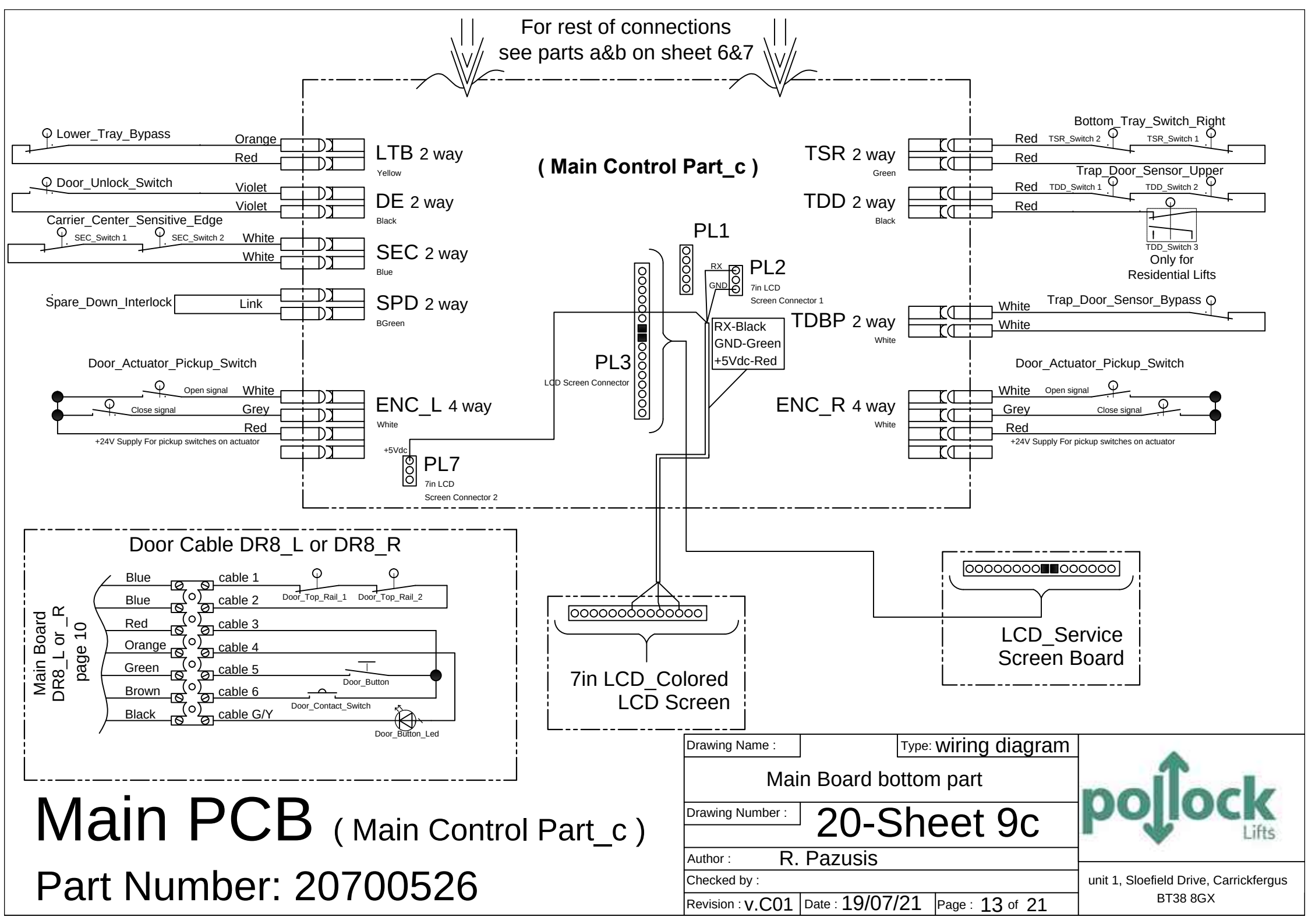

Main PCB (Main Control Part_c)

Part Number: 20700526

Drawing Name :	Type: wiring diagram		
Main Board bottom part			
Drawing Number :	20-Sheet 9c		
Author :	R. Pazusis		
Checked by :			
Revision : v.C01	Date : 19/07/21	Page : 13 of 21	

pollock Lifts
unit 1, Sloefield Drive, Carrickfergus
BT38 8GX

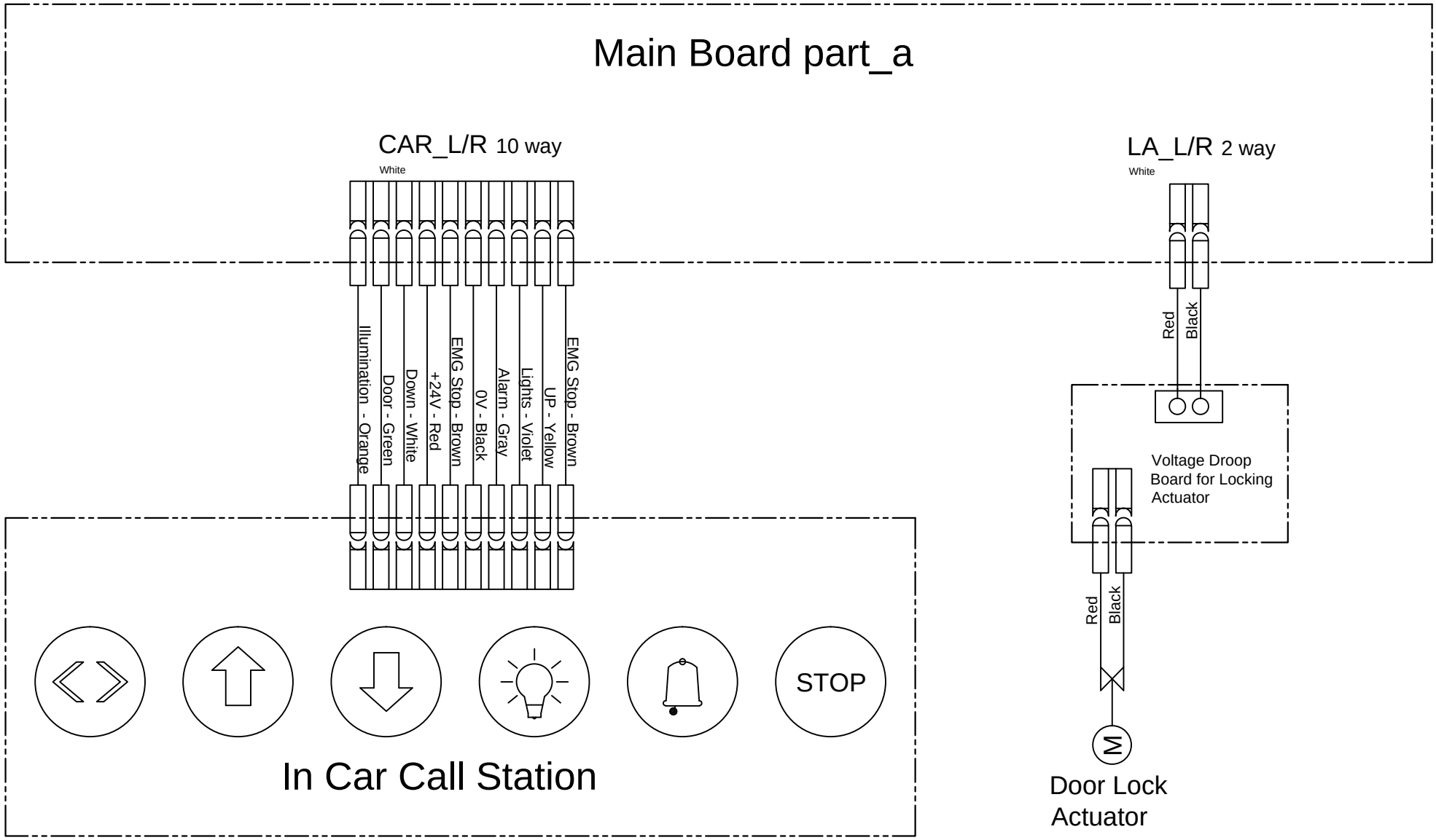

In Car Call Station (Standard)

Voltage drop Board

Drawing Name :		Type: wiring diagram	
In Car Call Station, Voltage drop Board			
Drawing Number :	20-Sheet 10		
Author :	R. Pazusis		
Checked by :			
Revision : v.C01	Date : 19/07/21	Page : 14 of 21	

pollock Lifts
unit 1, Sloefield Drive, Carrickfergus
BT38 8GX

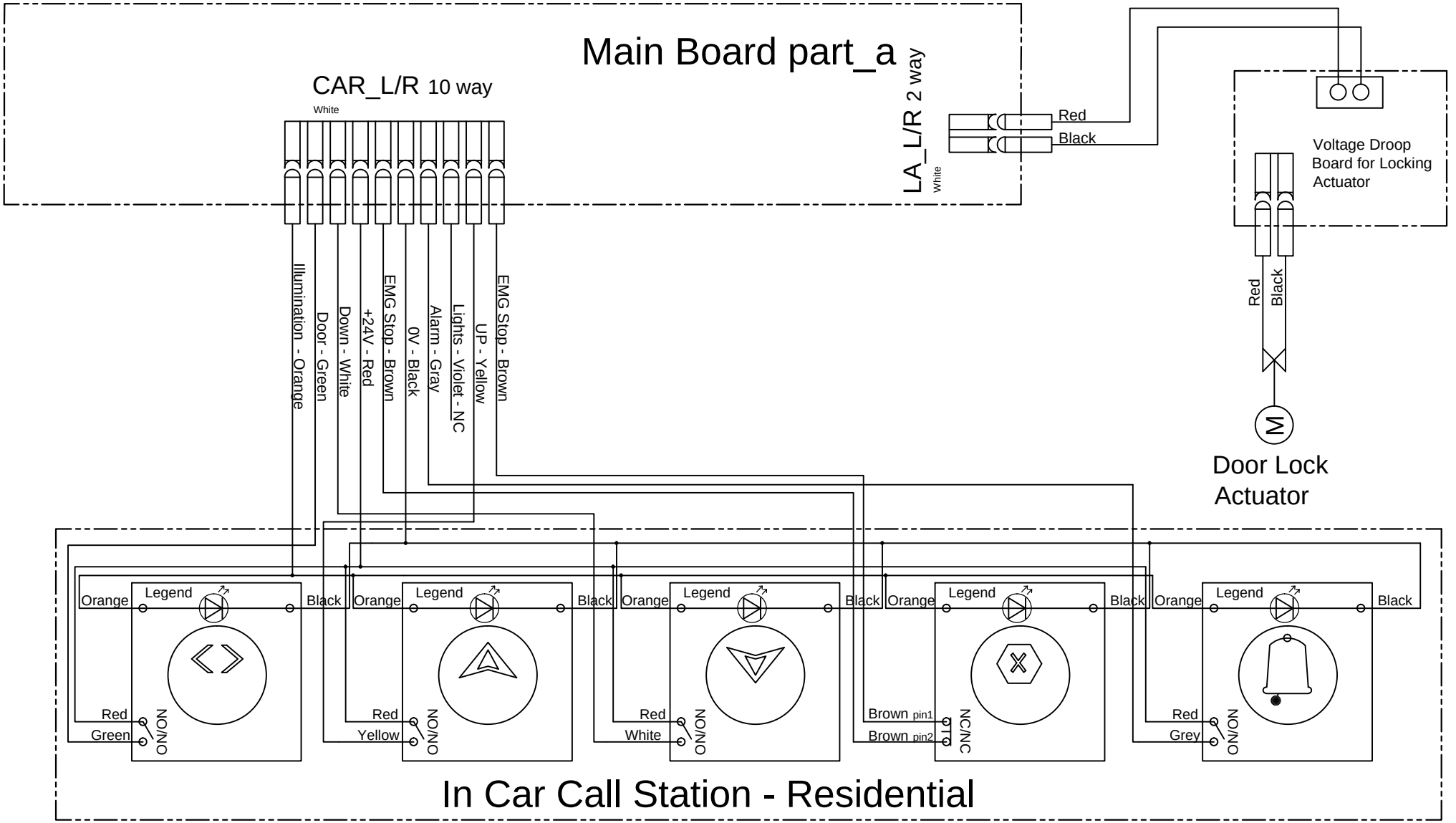

In Car Call Station

(Residential)

Drawing Name :	Type: wiring diagram	
In Car Call Station Residential , Voltage drop Board		
Drawing Number :	20-Sheet 11	
Author :	R. Pazusis	
Checked by :		
Revision : v.C01	Date : 19/07/21	Page : 15 of 21

pollock Lifts
unit 1, Sloefield Drive, Carrickfergus
BT38 8GX

Only for lifts with GSM unit:
SafeLine GL1

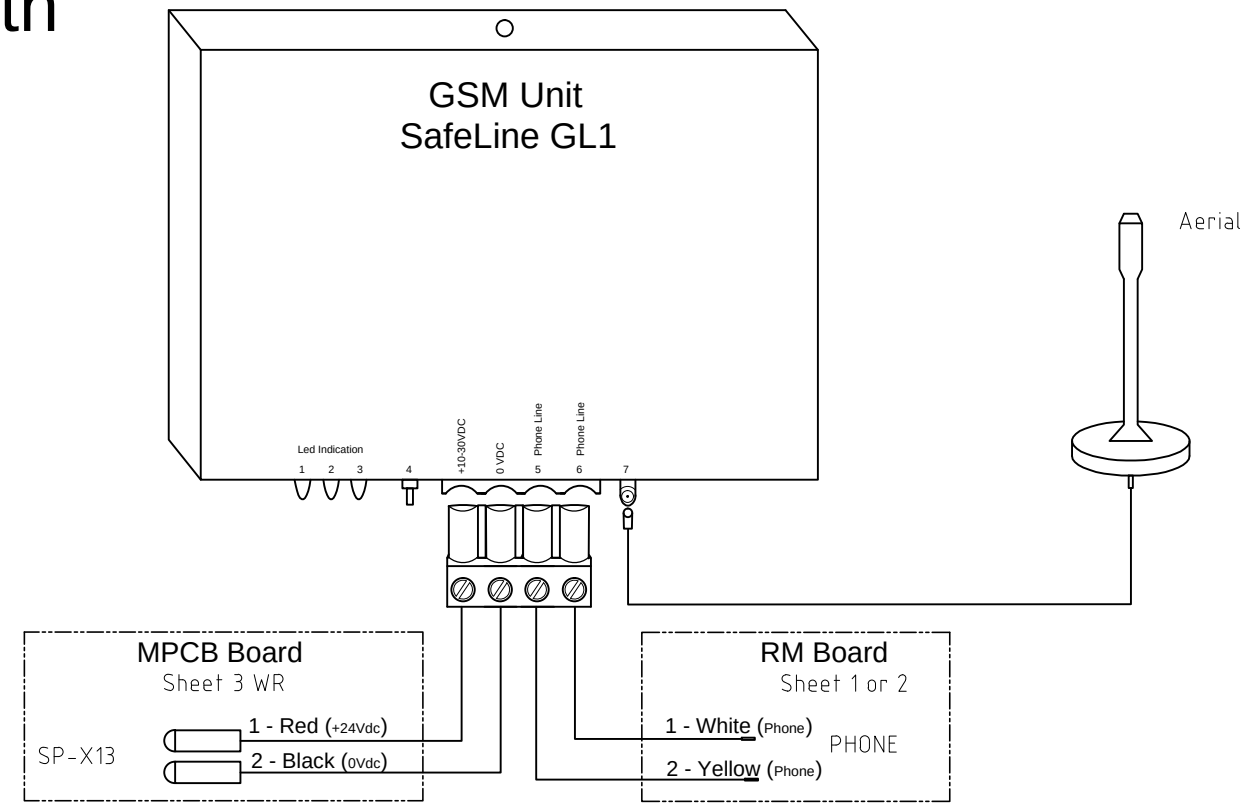

GSM Unit SafeLine GL1

Part Number: ----------

Drawing Name :		Type: wiring diagram	
GSM Unit - SafeLine GL1			
Drawing Number :	20-Sheet 12		
Author :	R. Pazusis		
Checked by :			
Revision : v.C01	Date : 19/07/21	Page : 16 of 21	

pollock Lifts
unit 1, Sloefield Drive, Carrickfergus
BT38 8GX

Only for lifts with
GPS unit:
Ascend AS01

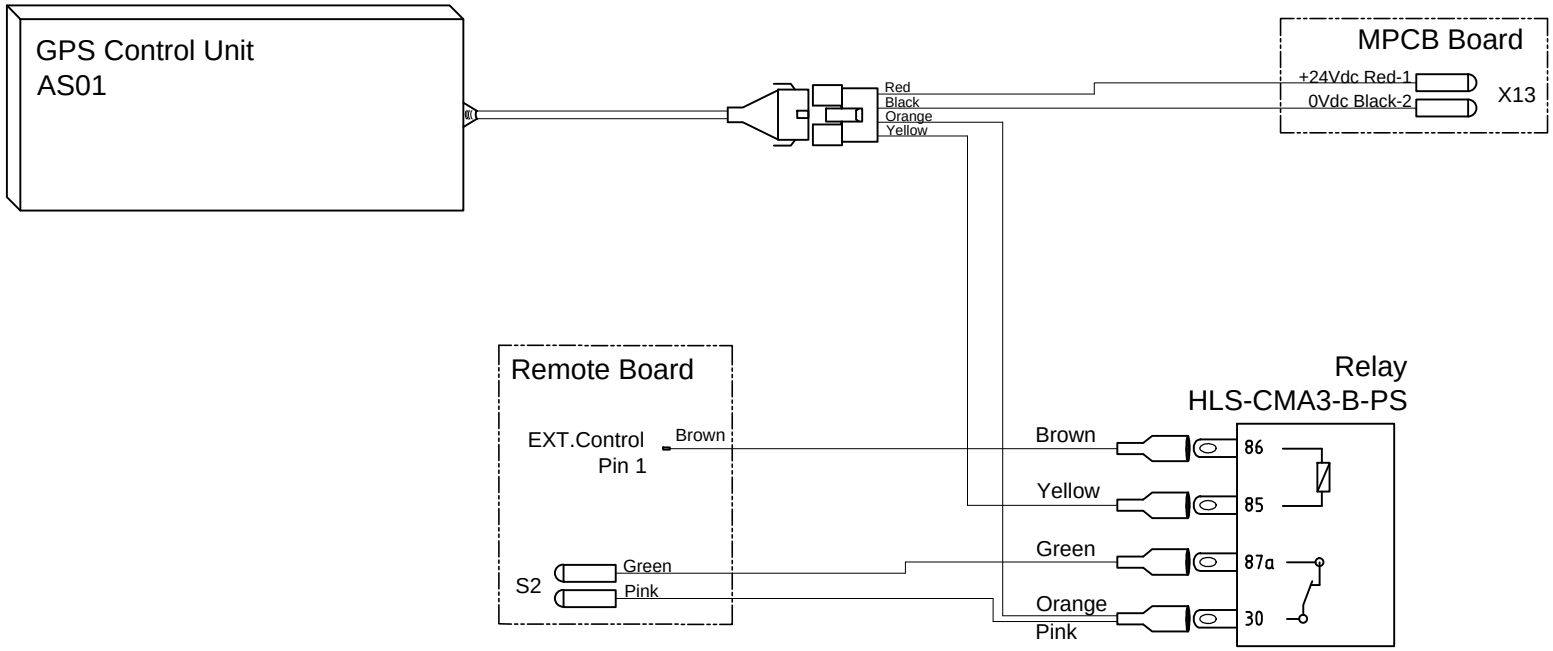

GPS Unit Ascend AS01

Part Number: ----------

Drawing Name :		Type: wiring diagram	
GPS unit AS01 connection			
Drawing Number :	20-Sheet 13		
Author :	R. Pazusis		
Checked by :			
Revision : v.C01	Date : 19/01/21	Page : 17 of 21	

pollock Lifts
unit 1, Sloefield Drive, Carrickfergus
BT38 8GX

Only for lifts with Bluetooth module

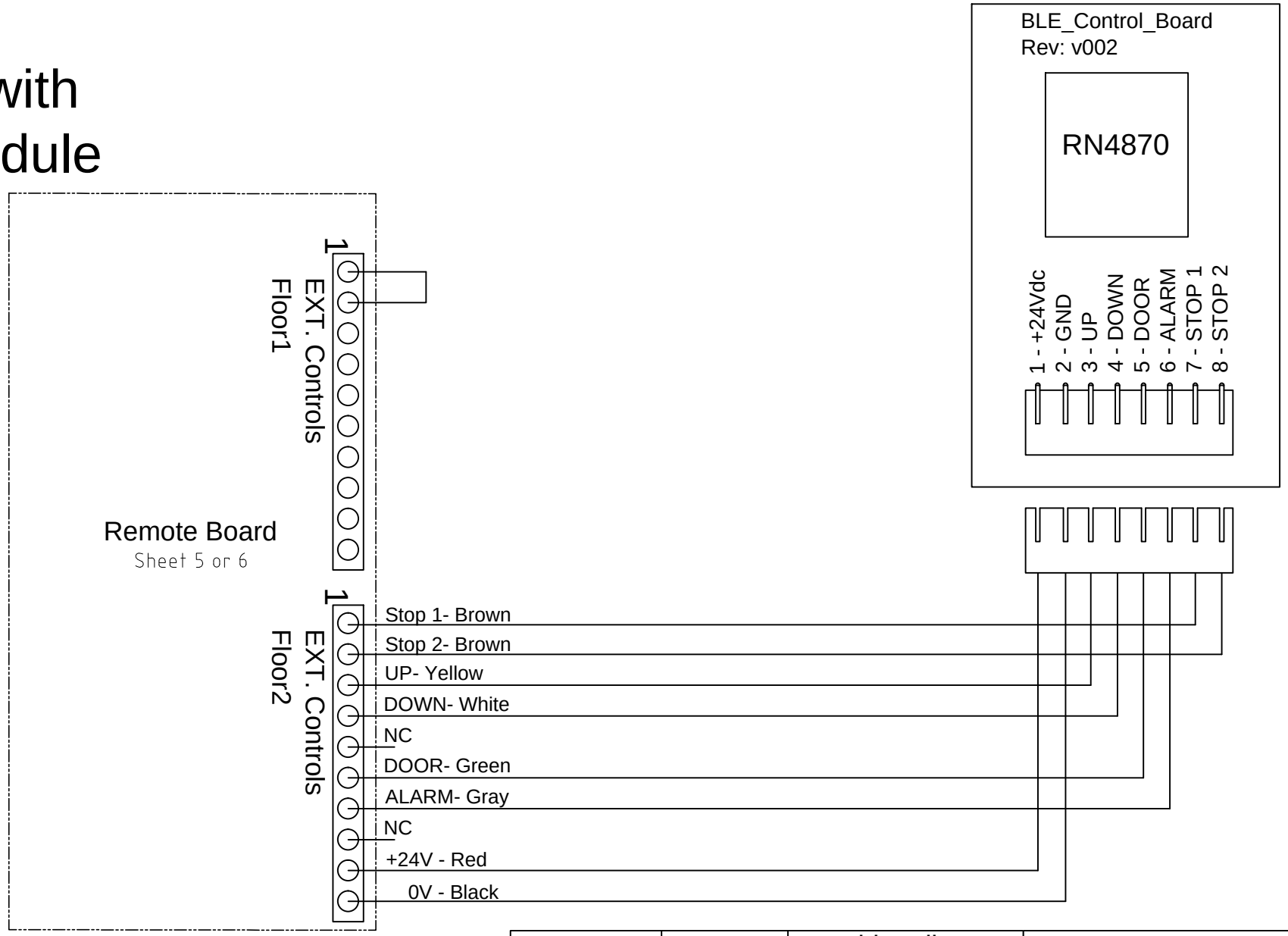

Bluetooth Control board

Part Number: ----------

Drawing Name :		Type: wiring diagram	
Bluetooth Control Module v002			
Drawing Number :	20-Sheet 14		
Author :	R. Pazusis		
Checked by :			
Revision : v.C01	Date : 19/07/21	Page : 18 of 21	

pollock Lifts
unit 1, Sloefield Drive, Carrickfergus
BT38 8GX

Only for residential lifts with wireless Jacob Jensen Phone

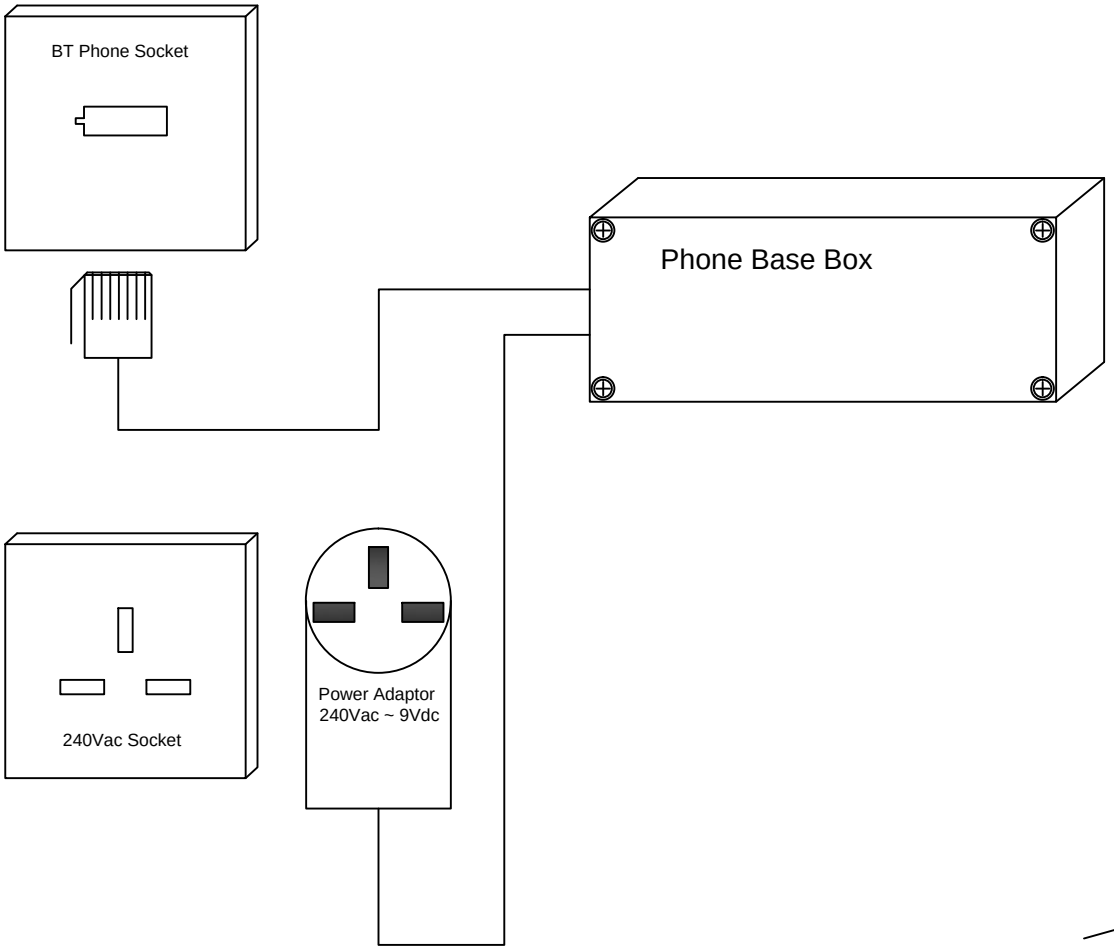

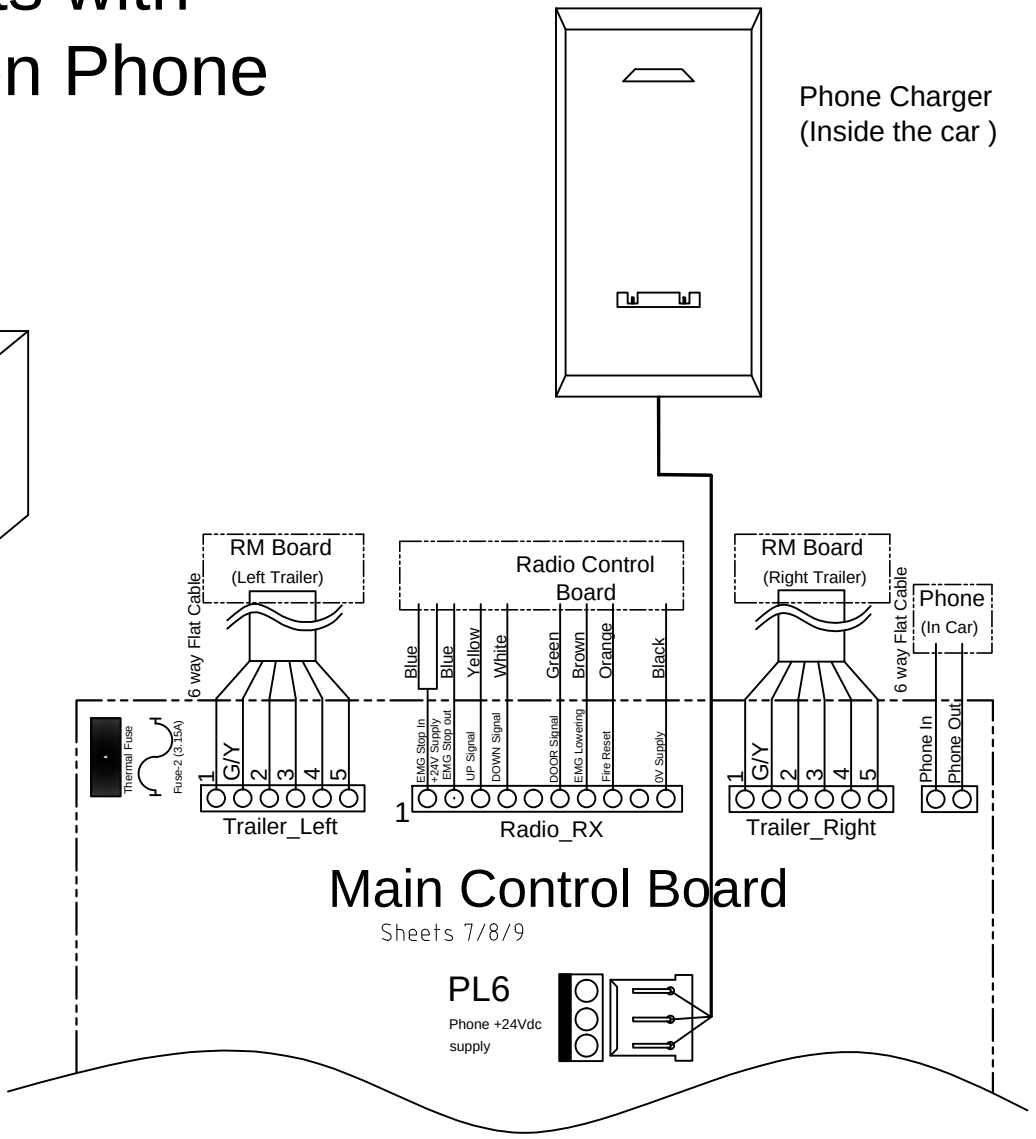

Jacob Jensen Phone

(Residential)

Number: 9100996/9100997

Drawing Name :		Type: wiring diagram	
Jacob Jensen Phone Connection			
Drawing Number :	20-Sheet 15		
Author :	R. Pazusis		
Checked by :			
Revision : v.C01	Date : 19/07/21	Page : 19 of 21	

pollock Lifts

unit 1, Sloefield Drive, Carrickfergus
BT38 8GX

GSM unit with Jacob Jensen Phone

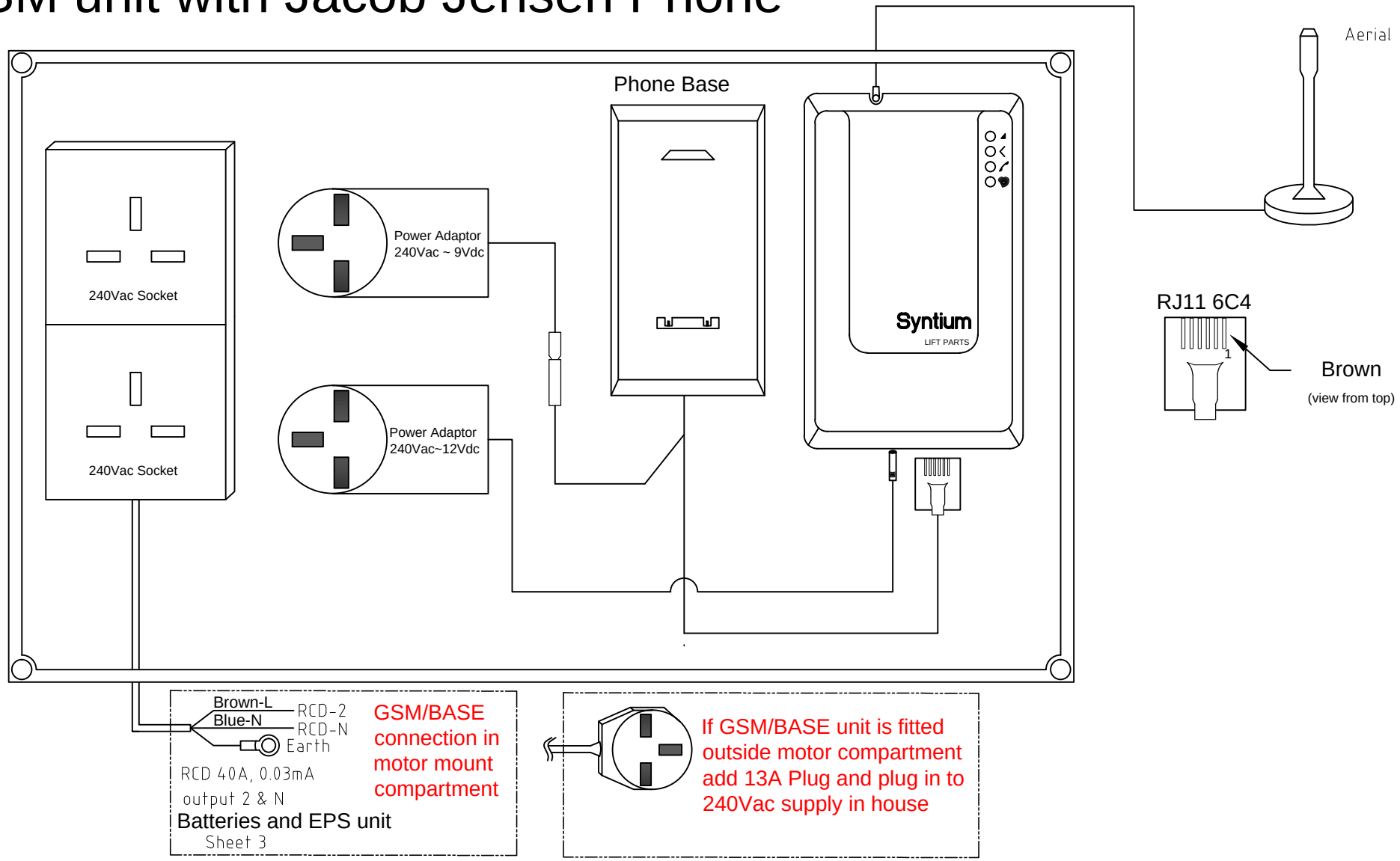

Jacob Jensen Phone

(Residential)

Number: 90100996/

Drawing Name :		Type: wiring diagram	
Jacob Jensen Phone Connection			
Drawing Number :	20-Sheet 16		
Author :	R. Pazusis		
Checked by :			
Revision : v.C01	Date : 19/07/21	Page : 20 of 21	

pollock Lifts

unit 1, Sloefield Drive, Carrickfergus
BT38 8GX

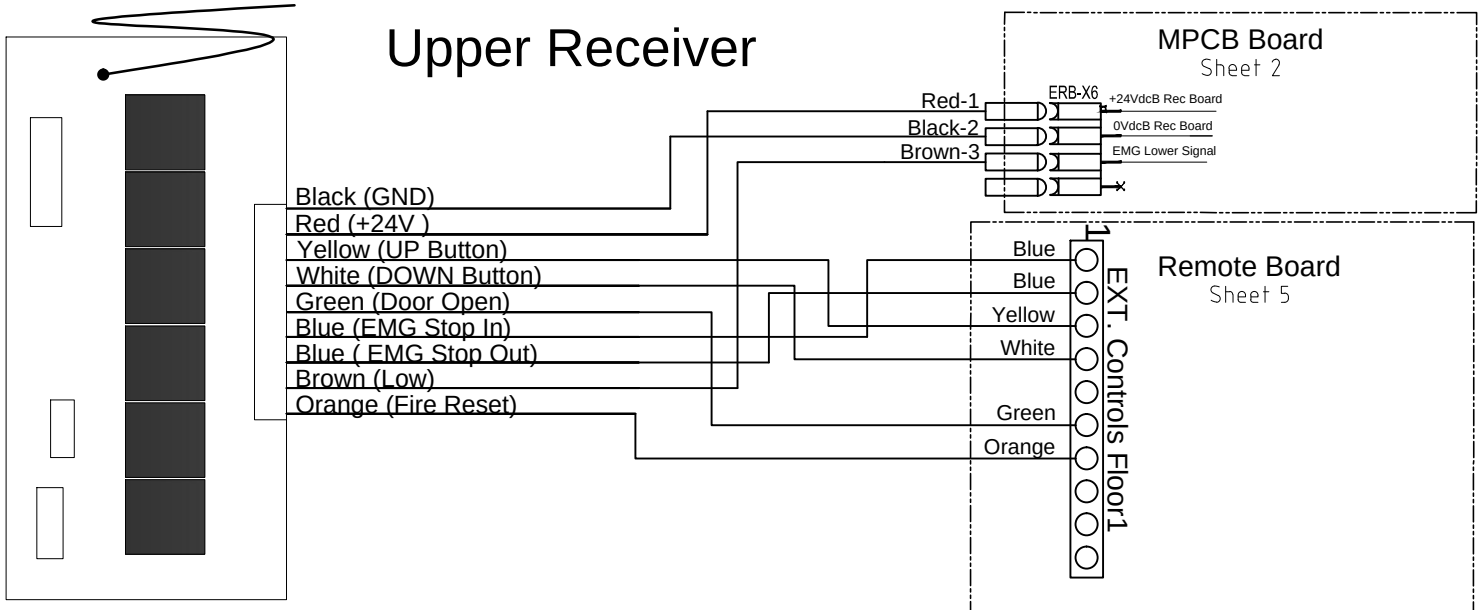

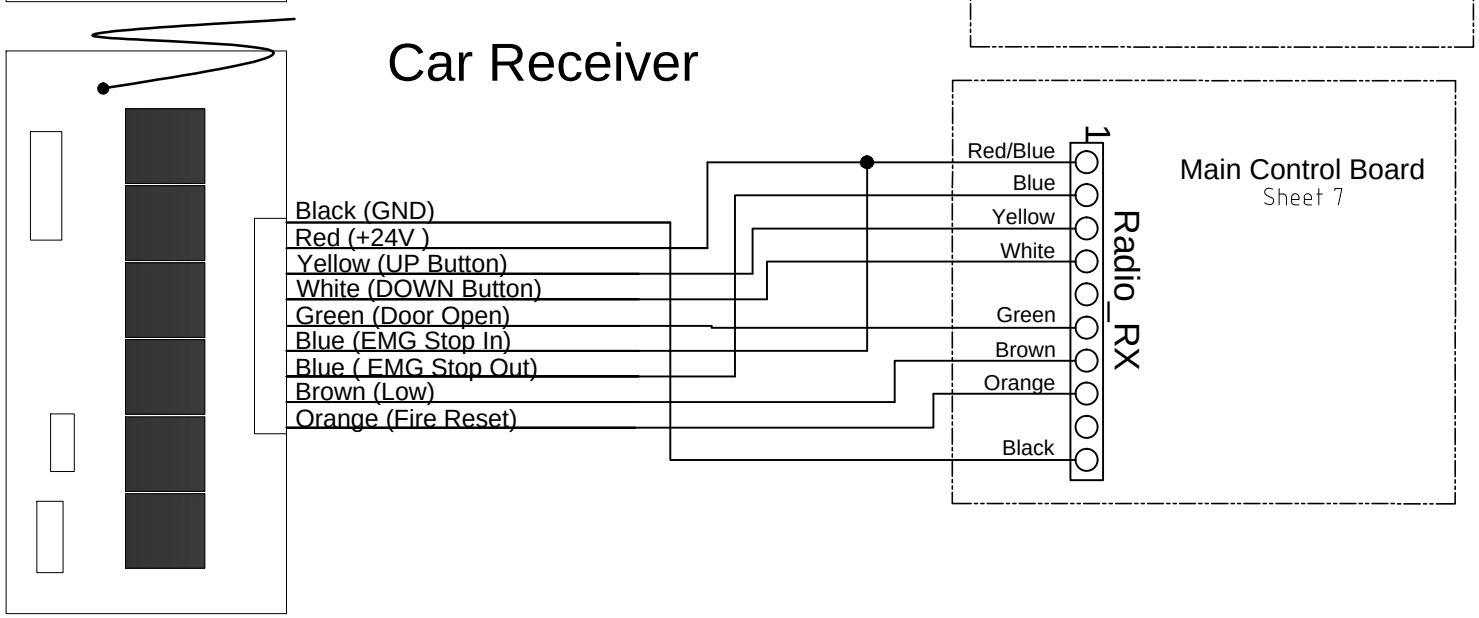

Receiver Boards

Number: xxxxxxxx

Drawing Name :		Type: wiring diagram	
Receiver Boards			
Drawing Number :	20-Sheet 17		
Author :	R. Pazusis		
Checked by :			
Revision : v.C01	Date : 19/07/21	Page : 21 of 21	

pollock Lifts
unit 1, Sloefield Drive, Carrickfergus
BT38 8GX