POLLOCK ELEVATOR SPECIFICATIONS

GENERAL:

- TRAVEL: _____
- OVERHEAD: _____
- SPEED: 16fpm (0.08m/s)
- LOAD CAPACITY: 500lbs (255kg)
- STOPS: TWO
- SINGLE OPENING (FRONT)

CAR FEATURES:

- 33 $\frac{7}{16}$" X 29 $\frac{1}{2}$" (850X750mm) CAR SIZE
- INTERIOR CAR HEIGHT 70 $\frac{7}{8}$" (1800mm)
- GRAY TEXTURE POWDER COATED CAB WITH CLEAR POLYCARBONATE VISION PANELS
- INTEGRAL HANDRAIL
- CONTRASTING BLACK CENTER CONSOLE PANEL
- ANTI SLIP FLOOR MAT - OPTIONS AVAILABLE
- ENERGY SAVING RECESSED LIGHT
- FULL HEIGHT GRAY TEXTURE POWDER COATED CAR DOOR WITH CLEAR POLYCARBONATE VISION PANEL
- OPTIONAL FLIP UP SEAT

CONTROLS:

- CAR OPERATING PANEL (COP) WITH ILLUMINATED BRAILLE BUTTONS
- WIRELESS CALL STATION AT EACH LANDING

MECHANICAL EQUIPMENT:

- MODULAR EXTENDED ALUMINIUM RAIL STRUCTURE
- CAR FRAME ASSEMBLY
- 120 VAC, 60Hz, SINGLE PHASE POWER SUPPLY
- GALVANIZED STEEL CABLES
- WINDING DRUM DRIVE ASSEMBLY

SAFETY DEVICES:

- SLACK ROPE SAFETY DEVICE
- TWO UPPER AND ONE LOWER SAFETY LIMIT SWITCH
- IN-CAR EMERGENCY STOP SWITCH AND ALARM
- CAR DOOR LOCKING DEVICE
- BATTERY BACK-UP EMERGENCY CAR LIGHT AND ALARM
- CAR TOP OBSTRUCTION SAFETY DEVICE
- BOTTOM CAR OBSTRUCTION SAFETY DEVICE

CONTROLS:

- CONSTANT PRESSURE OPERATION
- SELF DIAGNOSTIC SYSTEM
- BATTERY LOWERING SYSTEM

DO NOT SCALE DRAWING	DRAWING REV: B

Residential Elevator
Twin Person Cabin

T 850X750X1800

pollock Lifts

LOWER FLOOR

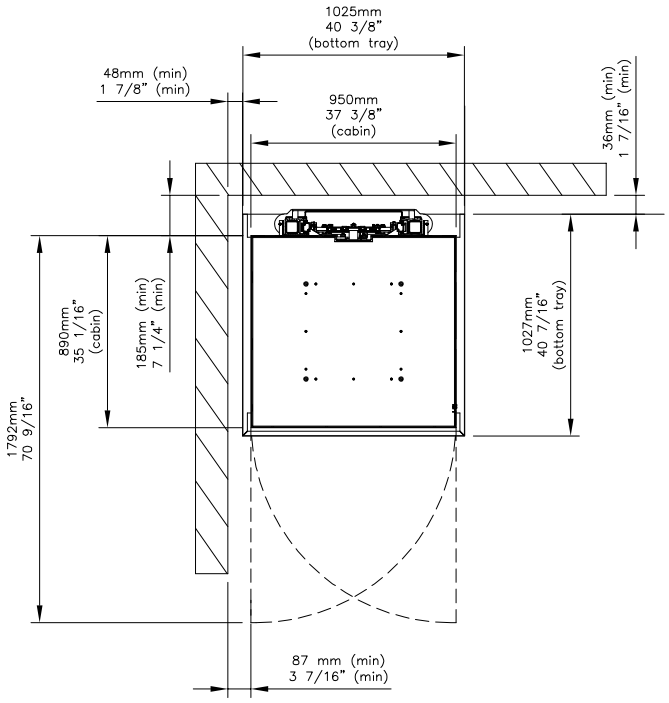

LOWER FLOOR
PLAN VIEW

Note:
Dimensions to all side walls are from skirting or trim board (if fitted)

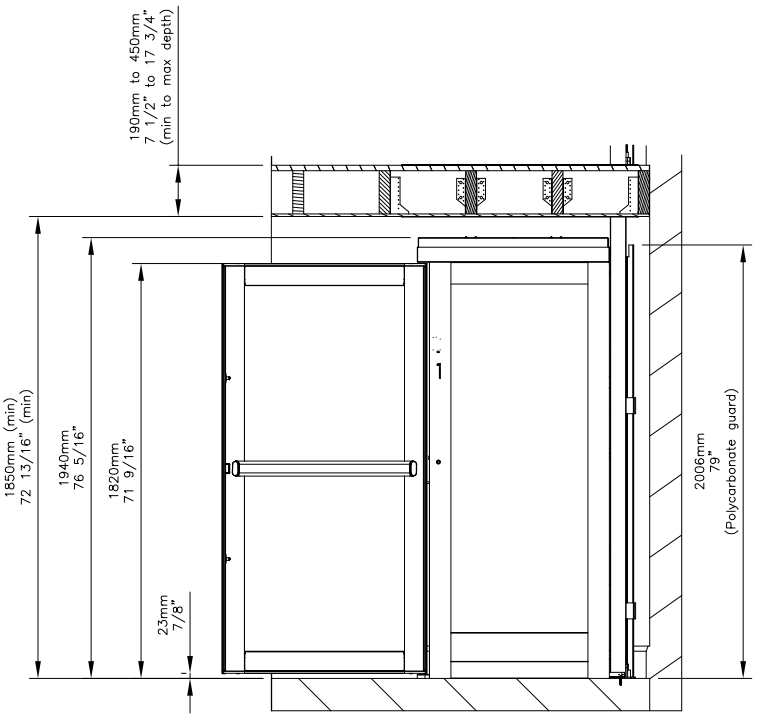

LOWER FLOOR
SIDE VIEW

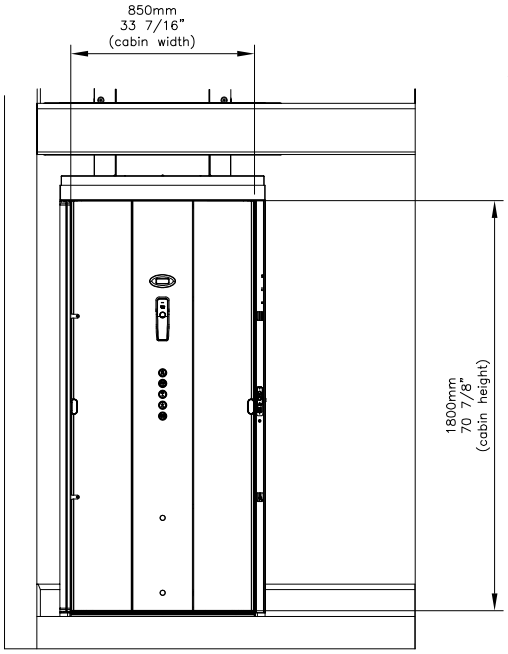

LOWER FLOOR
FRONT VIEW

DO NOT SCALE DRAWING	DRAWING REV: B

Residential Elevator
Twin Person Cabin
T 850X750X1800

pollock Lifts

UPPER FLOOR

Note:
Dimensions to all side walls are from skirting or trim board (if fitted)

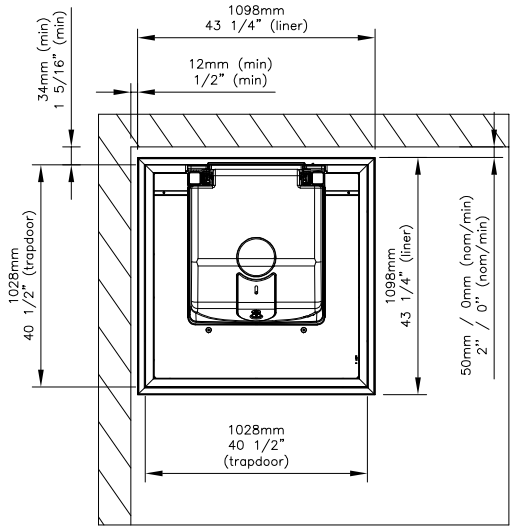

UPPER FLOOR
PLAN VIEW

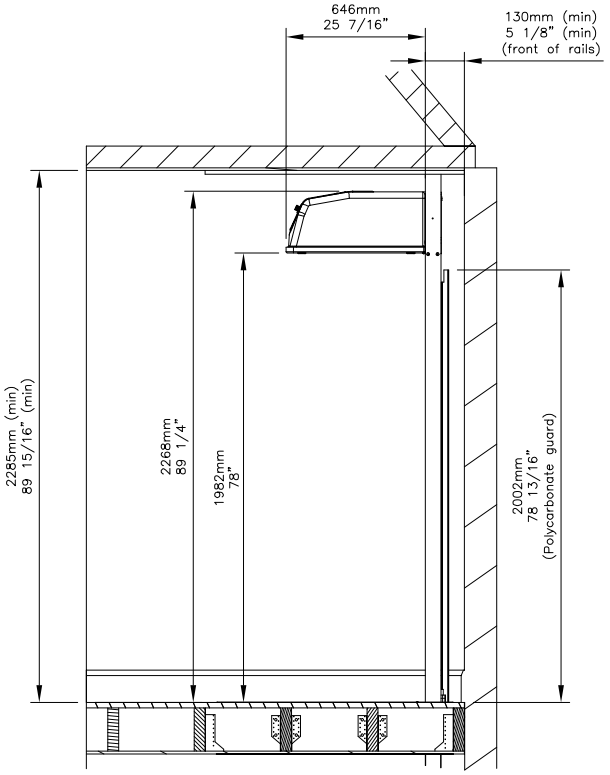

UPPER FLOOR
SIDE VIEW

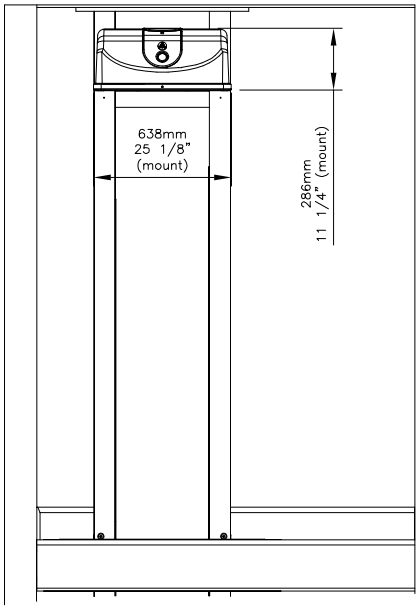

UPPER FLOOR
FRONT VIEW

DO NOT SCALE DRAWING	DRAWING REV: B

Residential Elevator
Twin Person Cabin
T 850X750X1800

pollock Lifts

POLLOCK ELEVATOR SPECIFICATIONS: SITE DETAILS

NOTES:

1) CONSULT LOCAL AUTHORITY HAVING JURISDICTION TO ENSURE COMPLIANCE WITH STATE AND LOCAL CODES.
2) MAXIMUM TRAVEL : 4185mm / 164 3/4"
3) MIN. 1ST CEILING HEIGHT: 1850mm / 72 13/16"
4) MIN. 2ND CEILING HEIGHT: 2285mm / 89 15/16"

JOB SPECIFIC INFORMATION:

	1ST FLOOR CEILING HEIGHT
	APERTURE DEPTH
	2ND FLOOR CEILING HEIGHT
	LIFT TRAVEL

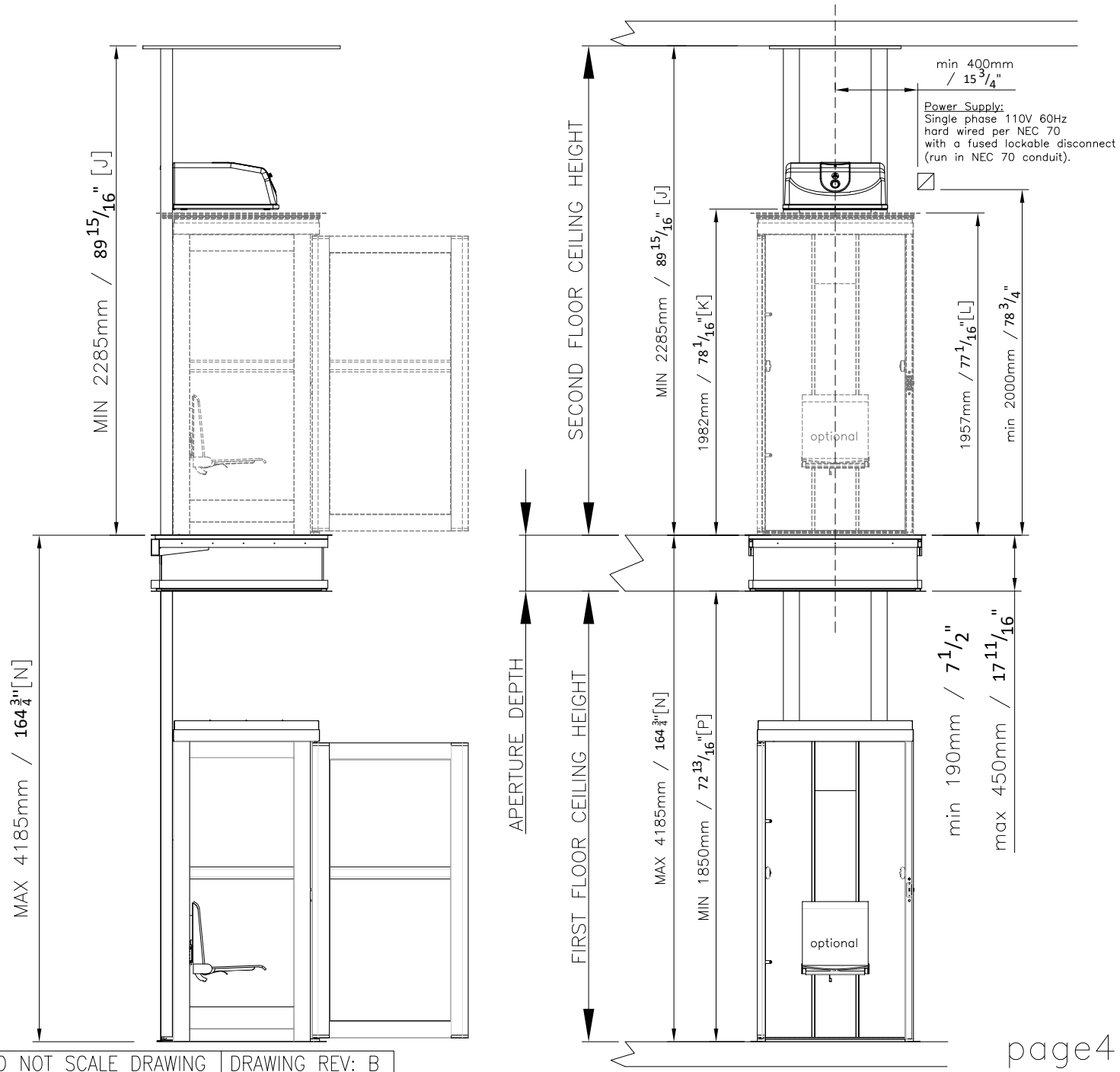

DO NOT SCALE DRAWING | DRAWING REV: B

Residential Elevator
Twin Person Cabin
T 850X750X1800

pollock Lifts

POLLOCK ELEVATOR SPECIFICATIONS: FLOOR OPENING

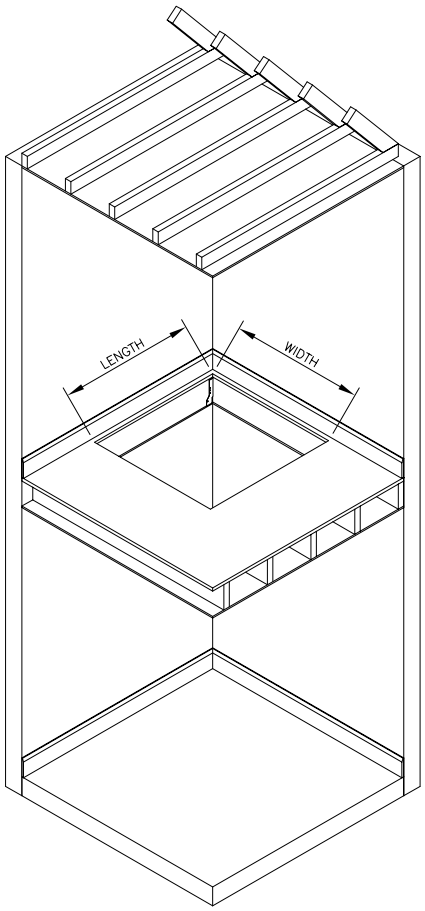

S = Min clearance to side wall
S = 30mm (MIN) / 1 $\frac{3}{16}$'' (MIN)
S = 50mm (NOM) / 2" (NOM)

T = Min clearance to rear wall
T = 0mm (MIN) / 0" (MIN)
T = 50mm (NOM) / 2" (NOM)

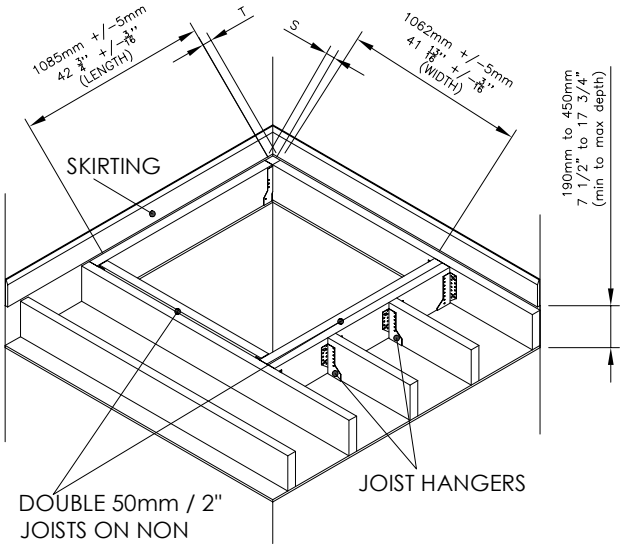

ILLUSTRATION ONLY FOR SIZES,
NOT FOR CONSTRUCTION

OPENING PREPARATION

Closely examine the siting for the lift and assess the possible effects on structural integrity and transmission of services.

Lift upstairs flooring and check the underfloor area for services, as listed below but not restricted to:Water pipes, Gas pipes, Electric Cables,
Re-route as necessary using only fully qualified labour.

When the area is clear of all potential hazards ensure that the joists in the working area are adequately supported from beneath.

Lift the flooring and cut and trim the floor joists to form the aperture size shown above. Ensure the trimmed aperture is square to the wall, level and that the trimmed joists are square to one another. Trimming joists must be doubled to provide sufficient support. If in doubt please consult Building Control. All work to be carried out in accordance with Building Regulations.

DO NOT SCALE DRAWING	DRAWING REV: B

Residential Elevator
Twin Person Cabin
T 850X750X1800

pollock Lifts

POLLOCK ELEVATOR SPECIFICATIONS: RING BEAM

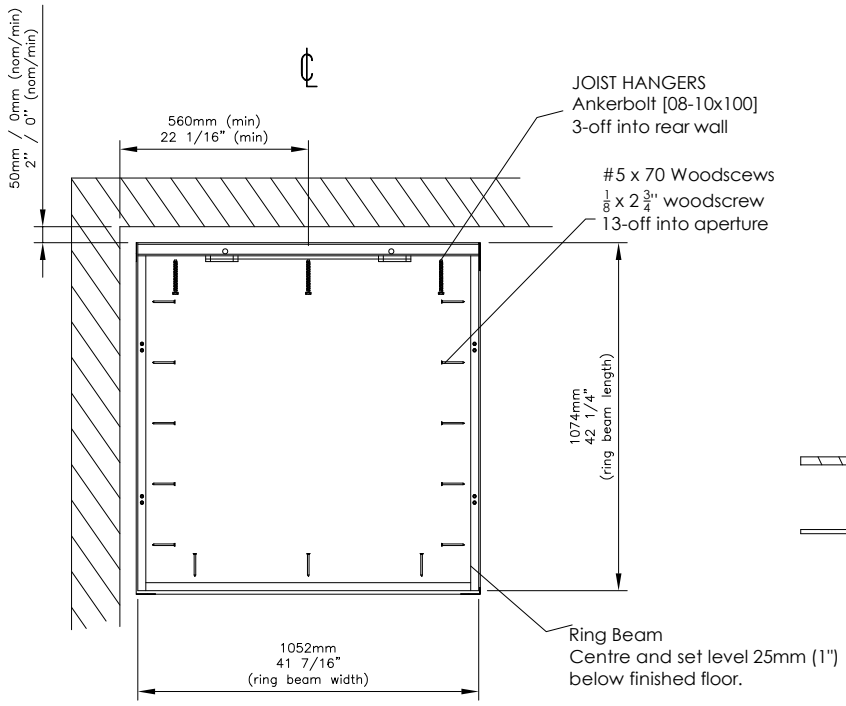

Section A-A (Plan View)

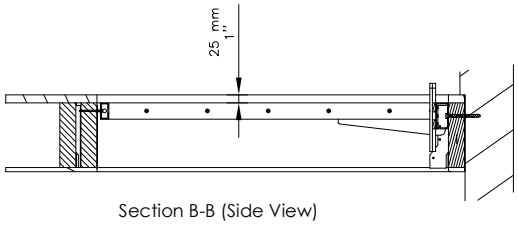

Section B-B (Side View)

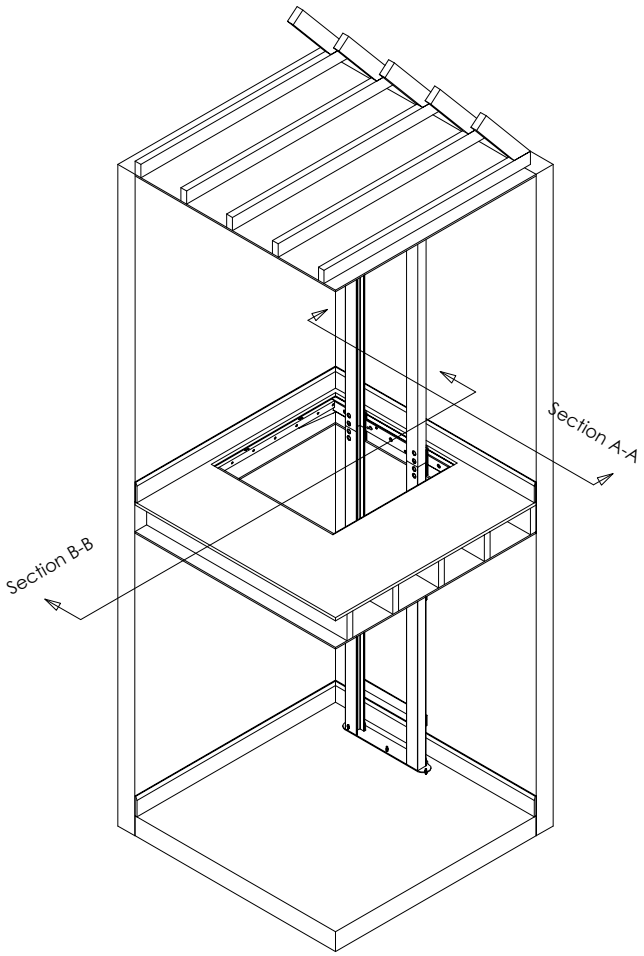

Note:
Dimensions to all side walls are from skirting or trim board (if fitted)

DO NOT SCALE DRAWING	DRAWING REV: B

Residential Elevator
Twin Person Cabin

T 850X750X1800

pollock Lifts

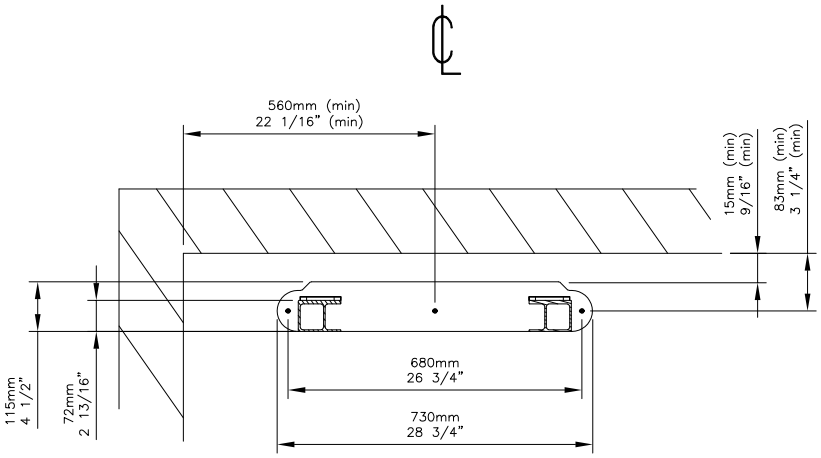

Section C-C (Plan View)

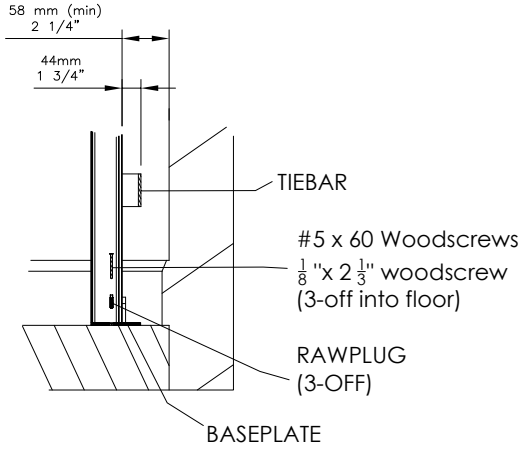

Section B-B (Side View)

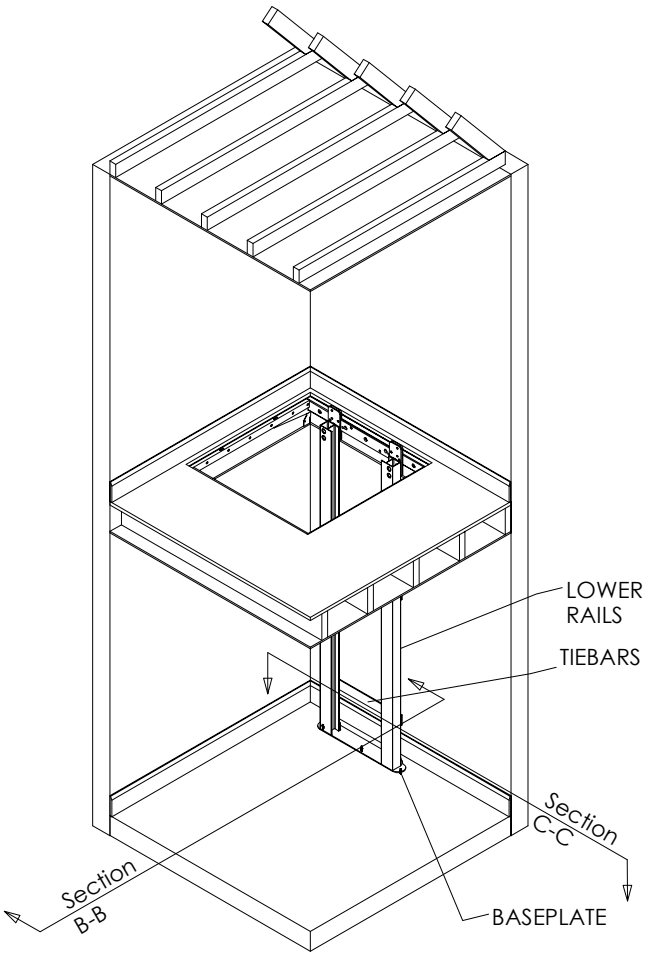

Note:
Dimensions to all side walls are from skirting or trim board (if fitted)

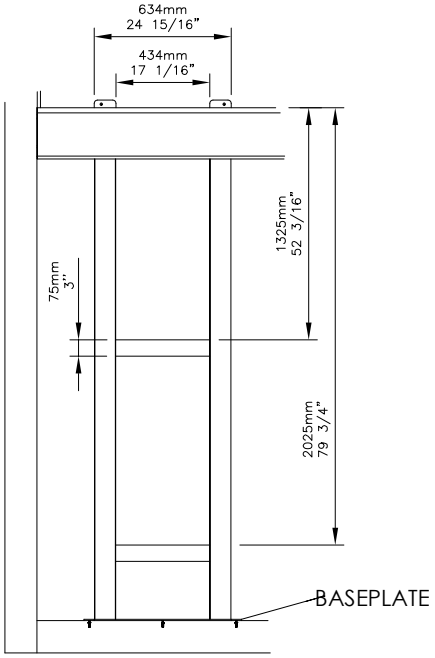

(Front View)

DO NOT SCALE DRAWING	DRAWING REV: B

Residential Elevator
Twin Person Cabin
T 850X750X1800

pollock Lifts

POLLOCK ELEVATOR SPECIFICATIONS: SPREADER BOARD

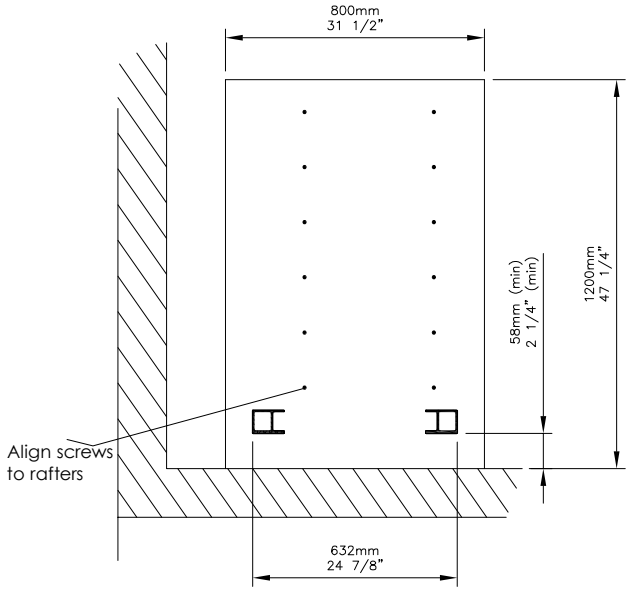

Section D-D (Plan View)
[looking up at ceiling]

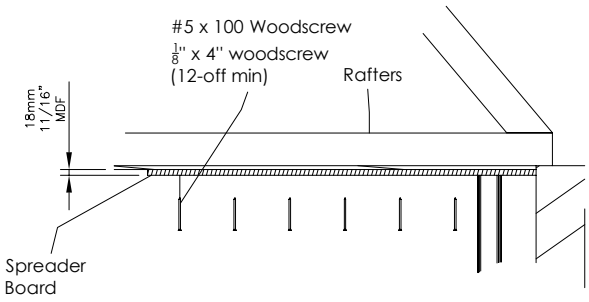

Section B-B (Side View)

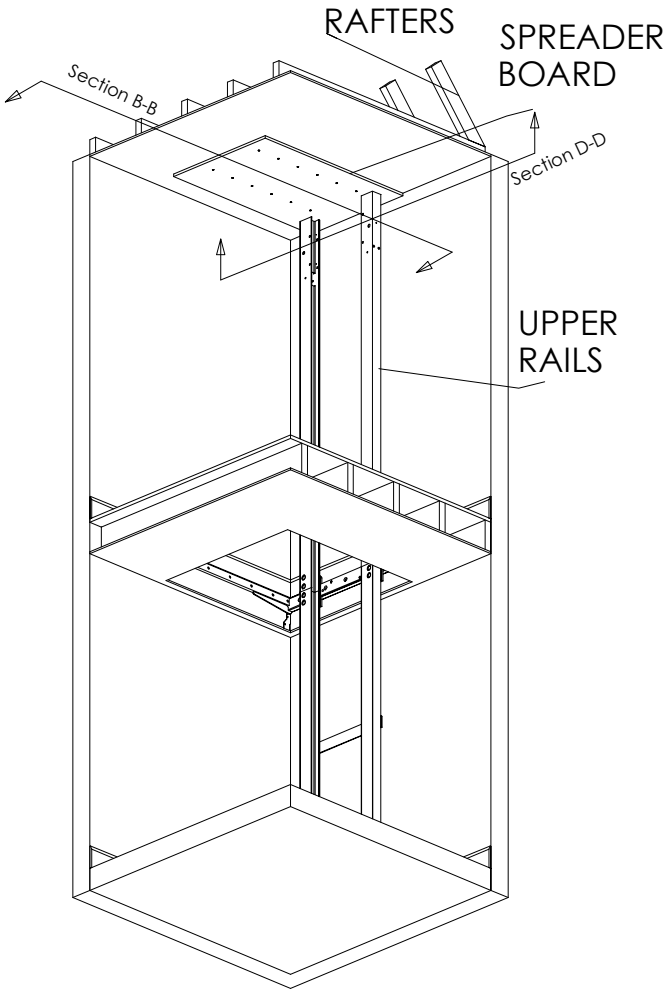

Note:
Dimensions to all side walls are from skirting or trim board (if fitted)

DO NOT SCALE DRAWING	DRAWING REV: B

Residential Elevator
Twin Person Cabin
T 850X750X1800

pollock Lifts

POLLOCK ELEVATOR SPECIFICATIONS: LOCK DETAILS

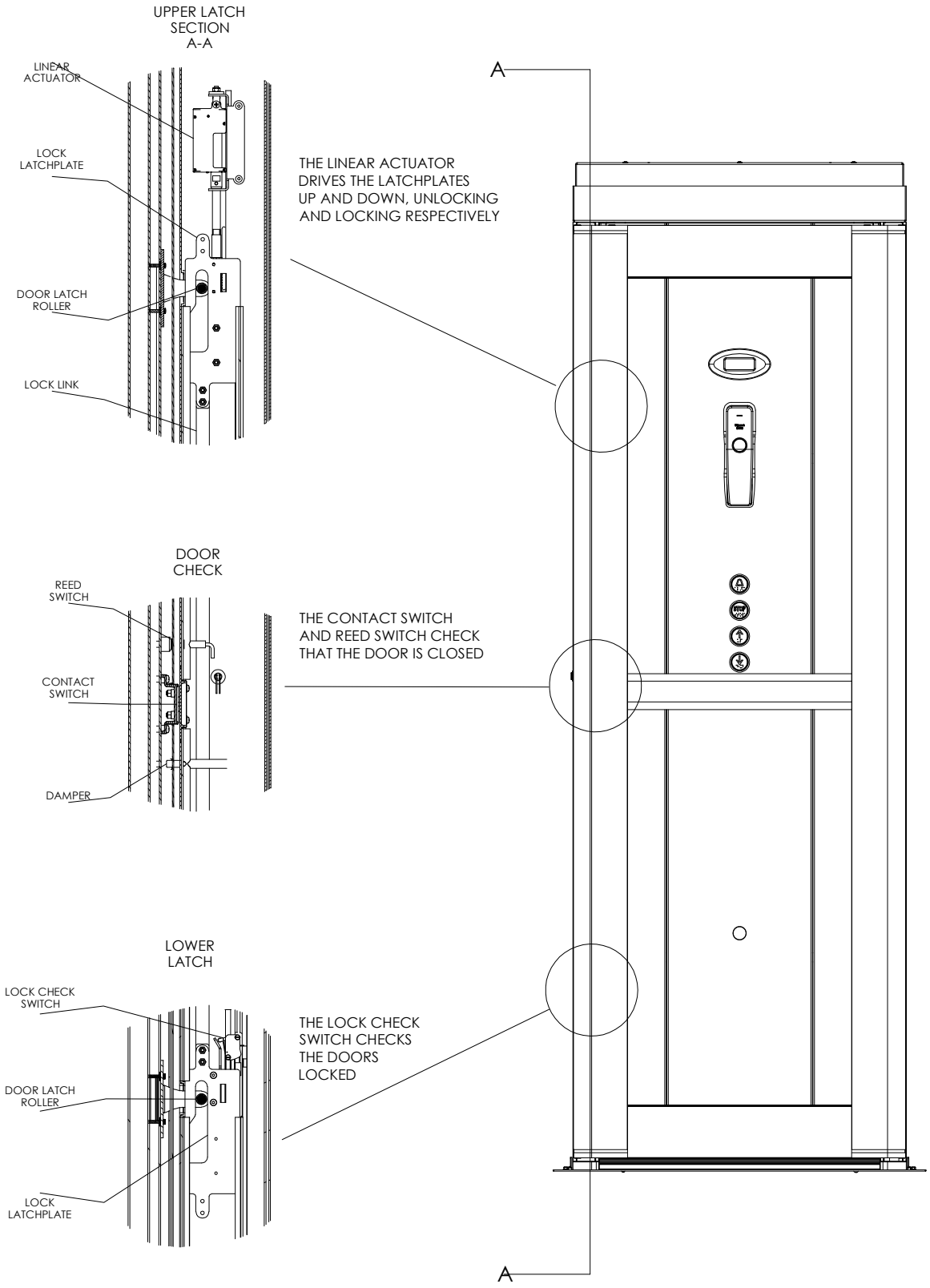

Door Interlock Manufacturer: Pollock Lifts LTD.

DO NOT SCALE DRAWING	DRAWING REV: B

Residential Elevator
Twin Person Cabin
T 850X750X1800

pollock Lifts