ALL DIMENSIONS IN MM | TOLERANCE +/− 5MM UNLESS OTHERWISE | DO NOT SCALE DRAWING

DIAGRAM A

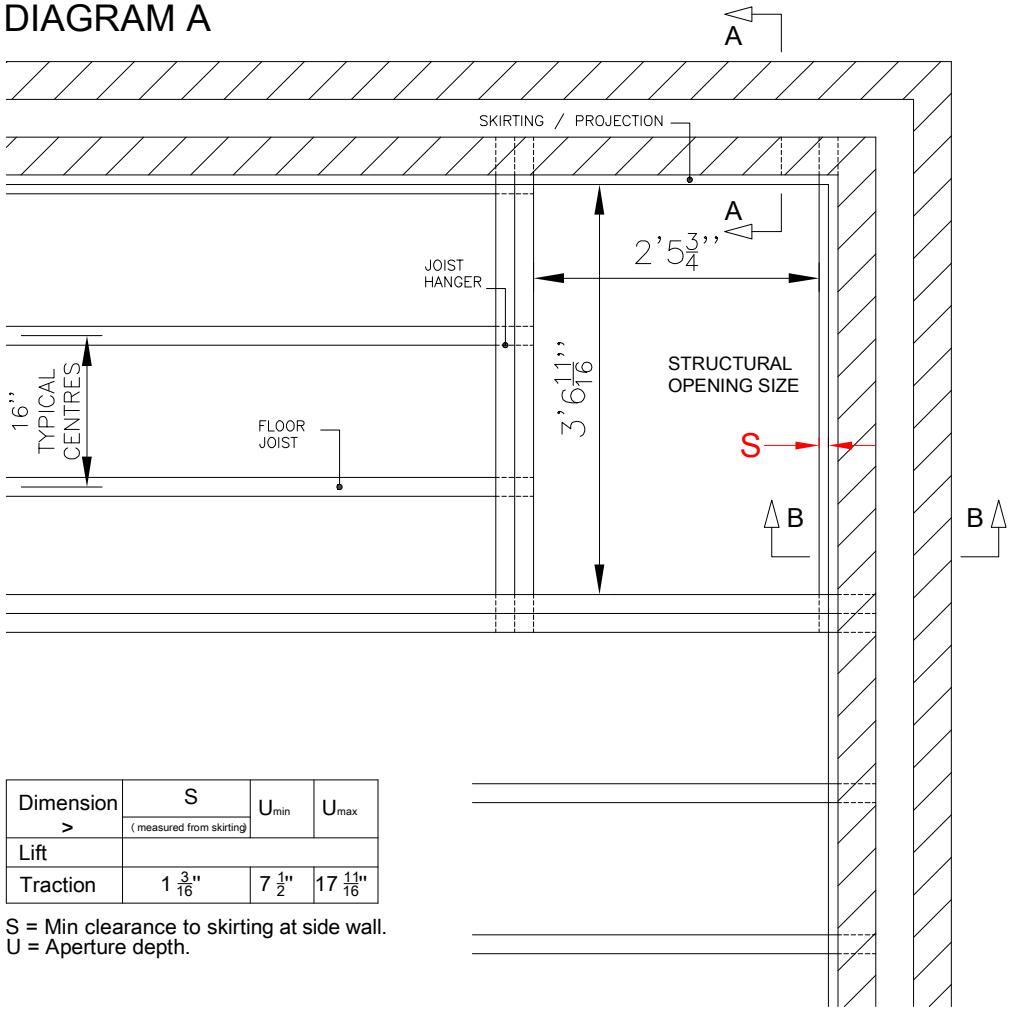

Dimension >	S (measured from skirting)	U_{min}	U_{max}
Lift			
Traction	1 3/16"	7 1/2"	17 11/16"

S = Min clearance to skirting at side wall.
U = Aperture depth.

APERTURE PREPARATION

Closely examine the siting for the lift and assess the possible effects on structural integrity and transmission of services.

Lift upstairs flooring and check the underfloor area for services, as listed below but not restricted to:Water pipes, Gas pipes, Electric Cables,
Re-route as necessary using only fully qualified labour.

When the area is clear of all potential hazards ensure that the joists in the working area are adequately supported from beneath.
Lift the flooring and cut and trim the floor joists to form the aperture size shown in Diagram A.
Ensure the trimmed aperture is square to the wall, level and that the trimmed joists are square to one another. Trimming joists must be doubled to provide sufficient support. If in doubt please consult Building Control. All work to be carried out in accordance with Building Regulations.

For floor covering / laminate flooring cut back flush to face of trimming joists at front and both sides of aperture as per Detail B-B and Back wall as per Detail A-A.

For lathe and plaster ceilings cut plaster back flush to face of trimming joists at front and both sides of aperture as per Detail B-B and Back wall as per Detail A-A.

Aperture must be level on the first floor.

WARNING - FALL HAZARD

ONCE THE OPENING HAS BEEN FORMED IN THE FLOOR IT IS TO BE COVERED OVER WITH A SUITABLE MATERIAL TO PREVENT FALLS. COVER TO BE LAID FLUSH WITH THE SURROUNDING FLOORING TO AVOID A TRIP HAZARD.

DETAIL A-A

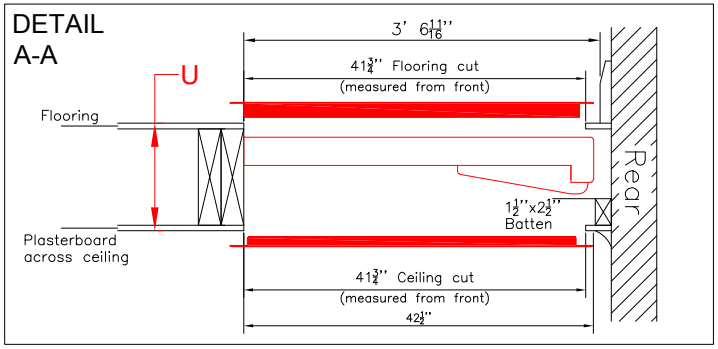

DETAIL B-B

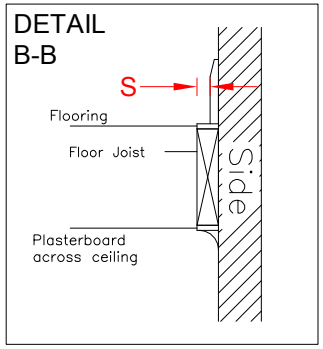

RESIDENTIAL ELEVATOR (25 SERIES)			
APERTURE DRAWING	25900960	issue: E	change no: CR1490
LIFT SIZE	542X750 1' 9 5/16" x 2' 5 1/2"	SHEET 1 OF 2	pollock Lifts
DRIVE TYPE	TRACTION	DO NOT SCALE	

ALL DIMENSIONS IN MM	TOLERANCE +/− 5MM UNLESS OTHERWISE	DO NOT SCALE DRAWING

DIAGRAM A

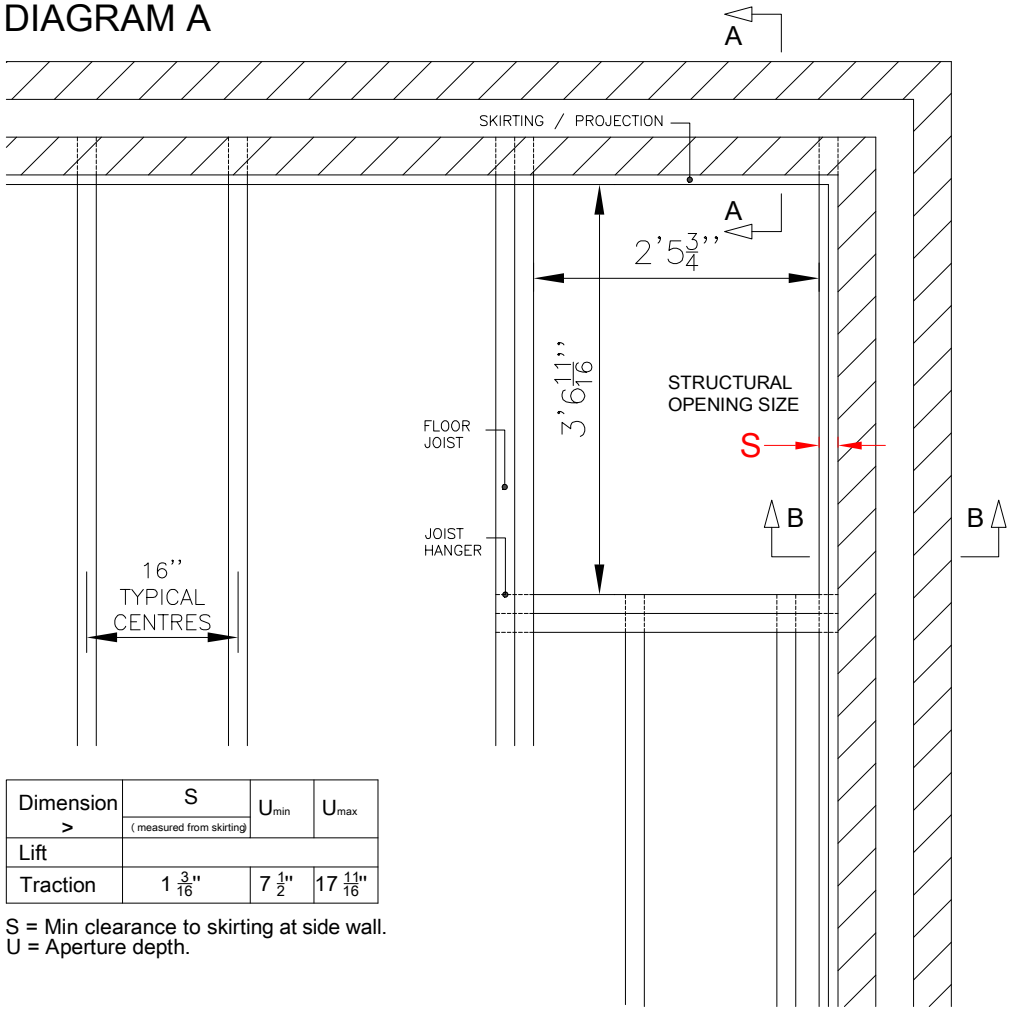

Dimension >	S (measured from skirting)	U_{min}	U_{max}
Lift			
Traction	1 3/16"	7 1/2"	17 11/16"

S = Min clearance to skirting at side wall.
U = Aperture depth.

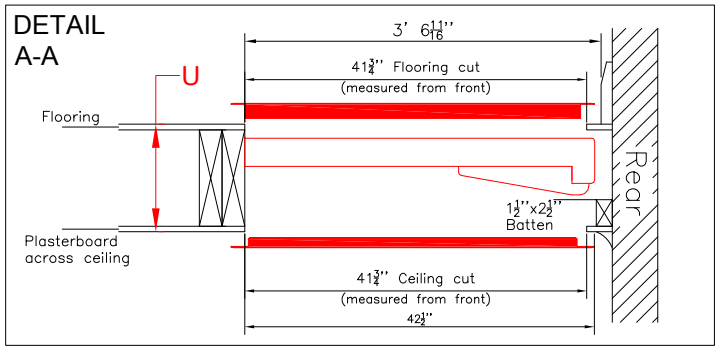

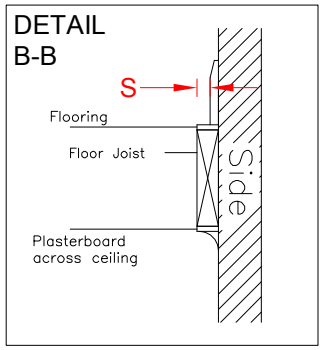

APERTURE PREPARATION

Closely examine the siting for the lift and assess the possible effects on structural integrity and transmission of services.

Lift upstairs flooring and check the underfloor area for services, as listed below but not restricted to:Water pipes, Gas pipes, Electric Cables,
Re-route as necessary using only fully qualified labour.

When the area is clear of all potential hazards ensure that the joists in the working area are adequately supported from beneath.
Lift the flooring and cut and trim the floor joists to form the aperture size shown in Diagram A.
Ensure the trimmed aperture is square to the wall, level and that the trimmed joists are square to one another. Trimming joists must be doubled to provide sufficient support. If in doubt please consult Building Control. All work to be carried out in accordance with Building Regulations.

For floor covering / laminate flooring cut back flush to face of trimming joists at front and both sides of aperture as per Detail B-B and Back wall as per Detail A-A.

For lathe and plaster ceilings cut plaster back flush to face of trimming joists at front and both sides of aperture as per Detail B-B and Back wall as per Detail A-A.

Aperture must be level on the first floor.

WARNING - FALL HAZARD

ONCE THE OPENING HAS BEEN FORMED IN THE FLOOR IT IS TO BE COVERED OVER WITH A SUITABLE MATERIAL TO PREVENT FALLS. COVER TO BE LAID FLUSH WITH THE SURROUNDING FLOORING TO AVOID A TRIP HAZARD.

RESIDENTIAL ELEVATOR (25 SERIES)				
APERTURE DRAWING		25900960	issue: E	change no: CR1490
LIFT SIZE	542X750 1' 9 5/16" x 2' 5 1/2"	SHEET 2 OF 2		
DRIVE TYPE	TRACTION	DO NOT SCALE		

pollock Lifts