LUXURY LIFT
TRACTION ELEVATOR
FIELD INSTALLATION
MANUAL



PROPERTY OF RESIDENTIAL ELEVATORS, LLC
CONTENTS OF THIS MANUAL ARE CONFIDENTIAL AND MAY NOT BE COPIED OR DUPLICATED
July 2025

Failure to follow proper installation requirements could result in death, serious injury, and equipment or property damage. The contents of this manual are confidential and may not be copied or duplicated.

Table of Contents

- Jobsite Readiness
- Preparation of Equipment
- Brackets and Rails
- Motor Gearbox Assembly Installation
- Z-rails
- Counterweight Frame, Ropes, and Car Sling
- Controller and Electrical Equipment
- Traction Surge Suppressor installation
- Platform Installation
- Home Elevator 3/4x4 Rule
- HallStations/Landing Operator Panel
- Touchscreen Hallstations
- Weatherproof and Keyed Hallstations
- Interlocks
- Standard Door Interlocks 3/4x4 with Keeper Plates
- StrikeLocks
- Photo Eye Brackets
- Encoder
- Travel Cable Installation
- Wiring
- Car Installation
- Gate and Cartop Installation
- Century Scissor Gate Installation
- Accordion Gate Installation
- Millennium Gate Installation
- Wrap Around Gate Installation
- Wiring the Cartop
- Power Gate Operator
- Car Bottom
- Touchscreen COP
- Glass Touchscreen COP
- Programming and Startup
- Job Wrap Up
- Glossary

Jobsite Readiness (Pre- Installation)

Before beginning the installation, ensure the job site and equipment meet all specified requirements.

Initial Site and Hoistway Verification

- Take pictures of the equipment before and after unwrapping.
- **Hoistway Dimensions:**
- Confirm pit depth, travel, overhead, width, depth, and door returns of the hoistway match the WorkOrder before beginning installation.
- If floors are not finished, consider that this could change pit, travel, and overhead measurements when added.
- Notify Residential Elevators (RE) of any discrepancies regarding the hoistway or travel dimensions.
- Be aware that if shaft dimensions are significantly less than the work order, it will affect whether the cab fits.
- **Pit Requirements**
- A Luxury Lift Traction elevator cannot be installed in an elevator shaft where there is space occupied below the elevator pit.
- The minimum pit depth for a Luxury Lift Traction is 8 inches.
- **Overhead Requirements**
- The minimum overhead for a standard height cab (86 inches) is 96 inches.
- The minimum overhead for an 8-foot 0-inch cab is 110 inches.
- The minimum overhead for a 7-foot 4-inch cab is 102 inches.

Equipment and Inventory Verification

- Verify that all equipment has been delivered and the package has not been disturbed, using the packing list as a guide.
- Verify that parts on site match the work order; if not, immediately contact RE to address the issue and/or shortages.
- Do not scatter parts during inventory verification; once verified, put equipment back in proper boxes until ready to install. A clean work area is essential for quality installation.

Job Readiness Verification (per REI pre-installation requirements):

- Verify proper blocking is installed and the layout is per RE specifications.
- Ensure the pit is cleaned out and meets contractual terms for impact load requirements (5,100 lb. impact load).
- Confirm doors and frames are installed with proper clearance.
- Ensure electrical feeds, both 240 VAC (10/3) and 120 VAC (12/2), are provided.
- Verify a phone line (CAT 5) is provided.
- Check that the access panel is cut out and in the correct location.
- Confirm doors are installed with hardware, notched, and prepped for interlocks/strikelocks.

Issue Resolution:

- If the job is not completely ready, call the sales representative to inform them of issues so they can coordinate with the General Contractor (GC) or Homeowner (HO) to resolve them, avoiding a return trip.

- Fill out the jobsite arrival checklist on the Field Service app, noting all issues and/or missing parts.
- If sales rep/GC/HO cannot resolve issues in a timely manner, it will become a Production Case. Submit Production Cases through the Field Service app, add all related photos, and add parts to the parts requisition order if needed.

Notes:

HOR 01 - HP1 TRACTION HOISTWAY ELEVATION (TYP.) LUXURY LIFT TRACTION (LLT)

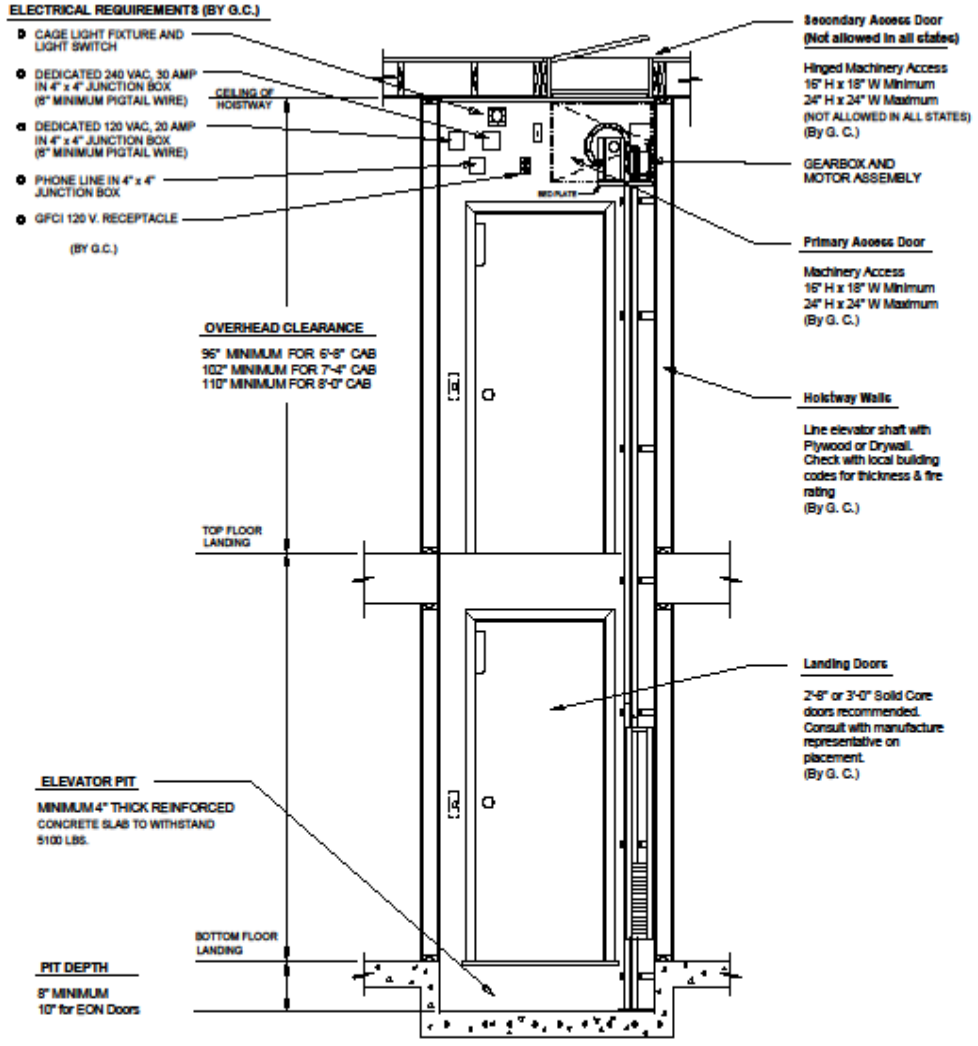

TYPICAL ELEVATION - HP-1

TYPICAL 2 STOP HOISTWAY LAYOUT

Residential Elevators Inc (REI) Control system contains the 240 VAC and 120 VAC Disconnects, however; GC/OWNER must provide dedicated circuit and with 4"x4" junction box (1 box for 240 VAC & 1 box for 120 VAC) in machine space per drawing. See (REI) Electrical Requirements Specifications for further details.

THE INFORMATION CONTAINED HEREIN IS SOLELY OWNED BY RESIDENTIAL ELEVATORS, INC. ANY REPRODUCTION IN PART OR AS A WHOLE WITHOUT WRITTEN PERMISSION FROM RESIDENTIAL ELEVATORS, INC. IS STRICTLY PROHIBITED.

RESIDENTIAL ELEVATORS
Elevating Your Standard of Living
ResidentialElevators.com
800.832.2004

LUXURY LIFT-HYDRAULIC PACKING LIST
PRODUCTION ORDER FORM

Residential Elevators, Inc.
Phone: (850) 926-6022 / (800) 832-2004
3x5 - Send 36" Light Curtain P#253505

Job #: 136805-NJ-0108339 State: DE Type: Hydraulic
Contractor: Bill Jones - 302 427-2250
Job Name: 73 Tidewater Rd

Type Of Shipment
Method: REI

Elevator Type:

# Of Stops:	Style:	Capacity:
4	Hydraulic	950LB

STEEL DEPT

Length
Rail: 28ft 7in
Pedestal: 59.75 (1x96)
Pist. Proj: 4.12

REI Pump Unit: 35 LPM
Hoses: 5ft Hose
Other:

Brackets:
3 Std. Rail Brackets
2 Cylinder Brackets

SCH 80 / Pipe Fittings
QTY: 1 GA Nipple Pkg and 20 FT of Sch 80 Hardpipe

Jack Size: 2 ¾ " EECO
SL: 120
Single-Piece Jack

GA PAN: DE

REI Sling:
6'8"

NOTES:
36

CAB DEPARTMENT

CAB
Cab Walls:
Classic Series Wall
Species:
Maple
Upgrades:
Finish:
Prefinished
Cab Ceiling:
Classic Series Ceiling
Species:
Maple
Upgrades:
FINISH: **Prefinished**
Cab Lighting: **Single LED - Standard Finish**
Handrail: **1 Maple Hardwood Handrail - Match Wall Finish**
Handrail Finish:
Phone: **MAD COP/Phone**
Cab Height: **7'4"**
Stain Info:

RICHARD

OPTIONS

1)Over Sized Cab(Up to 15sqft) **2)Automatic Car On/Off Light Option** **3)Surge Suppressor Set**
4)Float Switch in pit **5)Automatic Homing** **6)Alternate Arrival**

*** REI LL 7'4" Short Travel Between Floors** - Gate = Offset Pins and Rollers

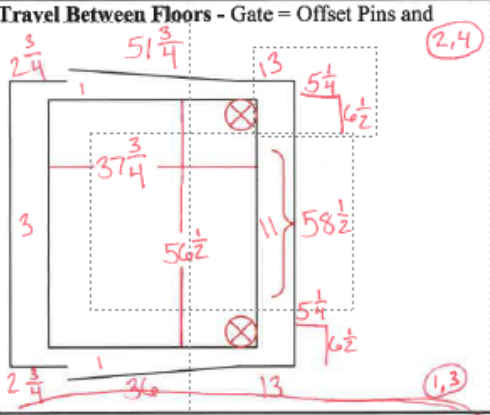

CAB & GATE DEPARTMENT

Gate Type

Height: 7'4"
QTY: 2.00
Type: 3/4 x 3 or 4 Code Compliant Vinyl Accordion 7'4"

Style: Maple Gate Silver and Grey - Hinge and Panel Connectors

Threshold Tone:
3/4" Silver Threshold

Gate Operator:
NO POWER GATE

Note: Offset Pins and Rollers.

Notes: Floor Travel Less Than 24Inches. SOG SILVER GATE TRACKS STACK TO RAIL WALL, TOUCHSCREEN COP, CENTER RAIL SYSTEM FOR PASS THROUGH APPLICATIONS. 88 CAB AND GATE, Surge Suppressor, Float Switch

Cab Lighting:
Single LED - Standard Finish
Comments:

Car Station:
Finish: **SS #4 Touchscreen Car Panel**
Options:
Comments:

Hall Stations:
Finish: **4 SS #4 Hall Station**
Options:
Comments:
Needs 4 Hall Stations

Controller Type: REI
Controller Options:
1) Auto Lights
2) Surge Suppressor
3)Float Switch
4)Auto Homing
5)
Auto Homing To: 3
Comments:

ELEVATED PLATFORM By: N/A
Machine Room Location: Opposite Rail Wall - 1
Comments:

Hoistway Construction
Wood Frame
Note: , , , ,

Door Locks
Type: 4 Standard Interlocks White Cover

#R.H.- 3
#L.H.- 1

NOTES: 1 A to columbia aveto left on second st which turns into Dodds Lane and left on Tidewater Box Truck 3025194892
73 Tidewaters
Rehoboth Beach
DE
19971
SOG SILVER GATE TRACKS STACK TO RAIL WALL, TOUCHSCREEN COP, CENTER RAIL SYSTEM FOR PASS THROUGH APPLICATIONS. 88 CAB AND GATE
,Surge Suppressor,Float Switch

ELECT

Cable Lengths
3/8 x 7 x 19

41 Ft
(2) Cables

Wiring:
GREY-- Installer Provided

JC 17—80ft

Overhead: 4 STOPS
Piston Proj.: **4.12**
O.H.: **108.50**
Travel: **225.750**
Pit: **8.00**

Reviewed by: **Levi Herndon** Date: **2/6/2025**

PLEASE NOTIFY US IMMEDIATELY OF ANY ERRORS IN SHIPMENT, THANK YOU. (850) 926-6022

Preparation of Equipment

Rails:

- Clean the T-Rails with mineral spirits and terry cloth rags.
- File any burrs or nicks on the T-rails and Z-rails, file inside the joints where the rails connect.
- Cut stubs for T-rails and connect fish plates on bottoms of rail sections. (Refer to bracket and rail sections for how to calculate stub measurements).
- Cut Z-rail stubs; they should be flush with the top of your top bracket (Refer to bracket and rail sections for how to calculate stub measurements). Connect fishplates to the bottom of rail sections.
- Drill out the bottom hole of the Z-rail to ½ inch; this will bolt to the pit pan.

Cables and Shackles:

- Counterweight shackles will come installed from plant, verify no damage has occurred during shipping.
- Verify the tail is 8 inches, with 2 retainer clips installed. The first clip is 1 1/2" from top of shackle and the second clip is 3” from top of first clip.
- Verify the wedge is visible from the top and tight to shackle by tapping down on shackle with hammer.
- Verify tail is taped to load bearing cable with electric tape and zip tied.

Car Sling Preparation:



1. Clean out the threads and install the thumb bolts and nuts for sling slide gib in four locations.
    - **Note:** Clean out threads using a 3/8-inch tap or bolt with WD40.
2. Install a 1-1/4-inch shoulder bolt in the car sling for the safety activation arm spring.
3. Install the rubber isolation pad and metal plate in the hitch beam using electrical tape to put them together and a zip tie to secure them to the hitch beam.
4. Install the photo-eye bracket assembly and secure the 4x4 connection box assembly to the left-hand stile. For a touchscreen job, mount the encoder to the same location.
    - **Note:** Use caution when inserting the sling into the shaft to avoid damaging the photo eye/encoder assembly. This can also be installed when the sling is already in the shaft.



Counterweight Frame (CW Frame):

- Install the rubber isolation pad and metal plate in the CWT Frame using electrical tape to put them together and a zip tie to secure them. (Similar to hitch beam isolation pad).
- Clean out ¼-inch threads for guide bolts using a tap or bolt with WD-40.

Brackets

- Remove the front clip and loosen the back clip on all brackets.
- Store front clips in a safe location until needed.

Brackets and Rails

Definitions:

- **Pit:** Bottom of hoistway to first floor landing.
- **Travel/Rise:** First floor landing to top floor landing.
- **Overhead:** Top floor landing to top of hoistway.
- **Total hoistway:** Pit + Travel + Overhead.

Overhead Reference point: The starting point of the bracket and rail layout. This can change locations depending on the access panel location.

1. The overhead reference point is the ceiling of the shaft when working in a hoistway where you have a minimum clear overhead (96 inches for a standard cab and 110 inches for an 8-foot cab).
2. The ceiling of the shaft will be the starting point of bracket and rail layout when the access panel is in the ceiling of the shaft, regardless of overhead dimensions, if they meet and/or exceed minimum requirements.
   - **Note:** Always locate the access panel and ensure it is laid out properly during your initial job site check. Ensure the motor and brake assembly are facing the access hole, and the brake release and crank handle are accessible where the access is located.
     In cases where the overhead measurement is greater than the minimum and the access is on a side wall, reference your access hole location to determine your overhead reference point. The top of the access hole would be your overhead reference point if it is equal to or greater than minimum overhead. (Refer to minimum overhead PDF).

Minimum Overhead Requirements

RESIDENTIAL ELEVATORS
Elevating Your Standard of Living

LLH and LLT (InfraDrive™) with Scissor/Accordion/Millennium Gates (With & Without Power Gate Operator)

Door Height	Cab Height	LLT InfraDrive™ Traction		LLH Hydraulic	
		Without Access Door Above Top Floor Landing	With Access Door Above Top Floor Landing	Without Access Door Above Top Floor Landing	With Access Door Above Top Floor Landing
6'-8"	82"	96"	96"	96"	N/A
7'-4"	88"	102"	102"	100"	N/A
8'-0"	96"	110"	110"	108"	N/A

LLH and LLT (InfraDrive™) with 2-Speed EON Doors

Door Height	Cab Height	LLT InfraDrive™ Traction		LLH Hydraulic	
		Without Access Door Above Top Floor Landing	With Access Door Above Top Floor Landing	Without Access Door Above Top Floor Landing	With Access Door Above Top Floor Landing
6'-8"	82"	106"	113"	106"	N/A
7'-4"	88"	N/A	N/A	N/A	N/A
8'-0"	96"	120"	127"	120"	N/A

The Level-Pitless

Door Height	Cab Height	The Level InfraDrive™ Traction	
		Without Access Door Above Top Floor Landing	With Access Door Above Top Floor Landing
6'-8"	82"	108"	108"
7'-4"	88"	N/A	N/A
8'-0"	96"	120"	120"

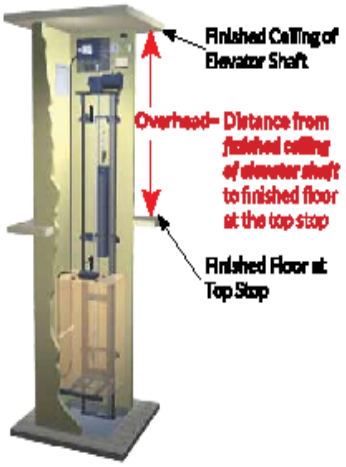

REI 0120 Rev1023

©2023 Residential Elevators

Determine Rail length:

- Measure down 12 inches from the overhead reference point to establish the Top of Rail (T.O.R.) mark.
- Measure from the T.O.R. mark to the pit floor to establish the total rail. Take this measurement in each rail stack area (left and right from pit pan to T.O.R.) to account for an unlevel pit

- **Example:** Total hoistway height to overhead reference point is 34 feet; measure down 12 inches for T.O.R.; measure from this mark to pit floor is 33 feet. T-rails come and 10' or 8' sections. In this example, 10' rails were sent. So, stub length would be 3 feet. Total rail length would be 33 feet.
- If the stub length is less than 9 inches, contact REI production department for a solution. Fishplates can be altered at bottom to accommodate.
- **Note:** Make sure stubs are installed at the bottom of the rail system.

Bracket Installation:

Traction Bracket Installation Manual

Overview and Initial Setup

This manual provides detailed instructions for installing traction brackets in a hoistway. Accurate measurements and careful execution are critical for plumb rail installation.

Determine Overhead Reference Point The overhead reference point is the starting point for all dimensions.

- It is the ceiling of the hoistway if:
  - There is a minimum overhead.
  - The access panel is in the ceiling of the hoistway.
  - The access panel is at the top of the hoistway, either on a rail wall or an adjacent wall.
- If the overhead is greater than the minimum requirements, the reference point depends on the access panel location.
- **Important:** If unsure about the access panel location, contact sales, the project manager, or the General Contractor (GC).

Locate Top of Rail (T.O.R)

1. From the overhead reference point, measure down 12 inches.
2. This mark indicates the Top of Rail (T.O.R) location.
3. Use a 4-foot level to mark the rail wall horizontally at the T.O.R location.

Determine Total Rail Length

1. Measure from the pit floor to the T.O.R mark. This measurement is your total rail length.

Determine Rail Stub Measurement and Fish Plate Locations

1. Identify the length of rails supplied with the job (typically 10 feet).
2. Calculate the rail stub measurement: If your T.O.R is 33 feet and you have 10-foot rails, your stub will be 3 feet (33 - 3 * 10 = 3).

3. Rail stubs are always placed at the bottom of the hoistway.
4. Fish plates are 1 foot long.

   Locate Fish Plate Marks:
   - Start the first fish plate at the stub location. (Bottom of hoistway)
   - Subsequent fish plates are placed in increments of the rail length (e.g., every 10 feet if 10-foot rails are sent).
   - For the example above (3-foot stub, 10-foot rails), fish plates would be centered at 3', 13', and 23'.
   - Mark fish plate locations on the wall with a sharpie for visual reference.
   - When marking, the 1-foot-long fish plate will extend 6 inches above and 6 inches below the center mark.

Critical Bracket Placement Rules Observe the following rules for all bracket placements:

1. The top bracket must be no more than 12 inches from the T.O.R.
2. Brackets cannot obstruct or "hit" fish plates.
3. Brackets must be spaced at a maximum of 7 feet apart.

Top Bracket Installation

1. **Mark Top Bracket Location:** Pull down 12 inches from the T.O.R and mark a horizontal line on the wall using a 4-foot level. This is your top bracket location.
2. **Mark Center Line:** Pull 28 inches from the landing door wall to establish the center line on your horizontal top bracket line.
3. **Mark Pilot Holes:** From the center line, mark pilot holes for the bracket.
   - Measure 16 ¼ inches to the left and 16 ¼ inches to the right of the center line.
   - From these marks, measure ¾ inch towards the center for the first pilot hole mark.
   - Then, measure 7 inches from that mark for the next pilot hole mark.
4. **Drill Pilot Holes:** Use a 5/16-inch pilot bit to drill the 4 pilot holes.
5. **Secure Bracket:**
   - Secure the bracket to the wall using an impact drill.
   - Use a minimum of two ½-inch lags on each side of the bracket.
   - Place a 4-foot level on top of the bracket while securing the lags.
   - If using concrete anchors, ensure no more than 1 inch is left out of the wall.
6. **Adjust Sub-brackets:** Loosen the sub-bracket bolts and bring them out to 5 3/8" from the wall to the 'v' of the bracket. The 'v' is the center line of the T-rail.
7. **Verify Inside Measurement and Face Bracket:**
   - Measure the inside-to-inside distance of the bracket; it should be 32 5/8 inches.
   - If necessary, "face" the bracket by using a 3-pound sledgehammer to open or close it to achieve the 32 5/8-inch measurement.
8. **Hand Tighten Lags:** Hand tighten all lags to the wall. Battery-powered impact drills alone may not provide enough torque.

The top bracket is now installed.

Determining Remaining Bracket Locations

1. **Drop Plumb Bobs:** From the 'v' of each side of the installed top bracket, drop plumb bobs down to the pit.
2. **Calculate Initial Bracket Spacing:**
    - Measure the distance from the pit to the top bracket.
    - Divide this distance by the total number of brackets sent with the job.
    - **Example:** If total rail length is 33 feet, and the top bracket is installed 12 inches down from T.O.R (meaning top bracket is at 32 feet from pit), and 5 brackets were sent: 32 feet / 5 = 6.4 feet per bracket.
    - This would place brackets at 6.4', 12.8', 19.2', 25.6', and 32' from the pit.
3. **Check for Fish Plate Interference and Adjust:**
    - Compare the calculated bracket locations with your marked fish plate locations.
    - **Example (cont.):** If fish plates are at 3', 13', and 23'. The calculated bracket at 12.8' will hit the fish plate at 13'.
    - **Adjustments:** If a bracket hits a fish plate, adjust its position. You have discretion if brackets are spaced no more than 7 feet apart.
    - **Example (cont.):** Drop the 12.8' bracket down to 12' to avoid the 13' fish plate. Drop the 19.2' bracket down to 19' to avoid spacing the brackets more than 7 feet apart.
    - The adjusted bracket locations would then be: 6.4', 12', 19', 25.6', 32' (Top bracket).
4. **Mark All Bracket Locations:** Use a 4-foot level to mark all determined bracket locations horizontally on the wall.

Bracket and fish plate locations are now marked.

Bottom Bracket Installation

The bottom bracket installation requires significant accuracy for plumb rails.

1. **Verify Strings:** Ensure the plumb bob strings dropped from the top bracket are still and not moving.
2. **Mark String Location on Wall:** At the bottom bracket location, use a speed square to mark the string location on the wall.
3. **Mark Pilot Holes:** Use the same measurements as for the top bracket but starting from the string mark on the wall.
    - From the string mark, pull over ¾ inch.
    - From that mark, pull 7 inches.
    - From that mark, pull 17 inches.
    - From that mark, pull 7 inches.
    - From that mark, pull ¾ inch.
4. **Drill Pilot Holes:** Drill pilot holes with a 5/16-inch bit.
5. **Secure Bottom Bracket:** Secure the bottom bracket to the wall.

6. **Adjust Left-to-Right:** Move the bracket left or right to ensure the plumb strings are barely touching the inside of the bracket on both sides.
    - Use a sharpie to mark the inside of the bracket on the wall before sliding it to see how much it has moved.
    - There should be a little daylight visible between the string and the bracket to confirm the string is not touching. If there is more than 1/16-inch gap, slide the bracket closer to the string.
7. **Adjust In-and-Out (Sub-brackets):** Pull out or push in the sub-brackets to ensure the strings are on the 'V' of the bracket.
8. **Check and Face 32 5/8-inch Measurement:**
    - Check the 32 5/8-inch inside-to-inside measurement.
    - The bracket may need to be faced with a hammer if the wall is bowed. Remember to hit both sides of the bracket evenly; for example, if you need to open it 1/8 inch, hit each side 1/16 inch.
9. **Hand Tighten Lags:** After ensuring the bracket is plumb (left-to-right on plumb bob strings, and front-to-back to the 'V'), tighten all 4 lags by hand with a wrench or socket.

The bottom bracket is now secured.

Installing Remaining Brackets

1. **Tie Strings:** Tie the plumb strings to the 'V' of the rail. Ensure the strings have a good amount of tension and use clamps to secure them to the bracket.
2. **Secure Remaining Brackets:** Secure the rest of the brackets to the wall using the same method as the bottom bracket installation.
3. **Verify String Alignment:** Before installing each bracket, check the string at the bottom to ensure it has not moved off the 'V'.
4. **Continual Checks:** Continually check the strings throughout the installation process to ensure they haven't moved.

Final Checks Before Rail Installation

1. **String Verification:** After all brackets are secured, check again that the strings haven't moved and are not touching any brackets.
2. **Clearance Check:** Ensure you have at least 9 inches from the landing wall to the edge of the outside bracket. This is crucial because depending on the gate ordered, a pocket on the platform could hit the brackets during travel if the 28-inch center line is off.
3. **Remove Plumb Bob Strings:** Once all checks are complete, remove the plumb bob strings and begin rail installation.

- **Tip:** Levels should never be used in the actual plumbing of the rails; plumb lines are the most accurate device for setting brackets.

Key Measurements and Reference Points

- **T.O.R:** Top of Rail
- **Top Bracket Location:** 12 inches from T.O.R
- **Center Line:** 28 inches from landing door wall
- **Bracket Inside-to-Inside Measurement:** 32 ½ inches
- **Pilot Hole Measurements from Center Line (or String Mark):**
  - ¾ inches
  - 16 ¼ inches
  - 17 inches
  - 7 inches

Winch Installation Manual

I. Overview and Safety Precautions

This manual provides instructions for installing and testing the winch for a Luxury Lift Traction Elevator. Proper installation and adherence to safety guidelines are crucial for safe operation.

A. Inspect Winch and Wire Rope Before Use

- **DO NOT USE** if the winch or winch rope shows any damage or distortion.
- Look for kinking, crushing, un-stranding, bird caging, strand displacement, or core protrusion in the wire rope.
- Replace any damaged winch or wire rope immediately.
- Only use RE-approved winches and winch ropes. The RE winch rope will come crimped with a thimble installed.

B. Winch Mounting Hardware

- The winch comes mounted on two 24-inch pieces of Unistrut.
- **For wood blocking applications:** Use ½ x 4-inch lag bolts with washers. Four 5/16-inch pilot holes need to be drilled. The blocking must meet RE structural requirements.
- **For concrete blocking applications:** Use ½ x 4-inch concrete anchors. Concrete must be poured solid. Four ½-inch holes need to be drilled.
- Four lag bolts or concrete anchors are required, two on each side of the winch, using the outside Unistrut slotted holes.
- Ensure all fasteners are tight and not stripped.

C. Wire Rope Handling Precautions

- **ALWAYS** pay close attention to the wire rope when using the winch.
- Never allow slack in the wire rope.
- Make sure the wire rope does not unspool on either side of the winch drum.
- Never allow the wire rope to run over sharp edges or fixed objects.
- Never allow the wire rope to kink or be crushed.
- Run the winch run button behind the lift cart when installing the motor and gearbox.

Winch Installation

1. **Determine Winch Location:**
   - It is essential that the winch is installed in the correct location to prevent wire rope failure due to spooling on the winch drum.

- Secure the winch 2 inches above the top bracket.
- Position the bottom bolt on the left side of the winch drum in line with the center of the left z-rail.

2. **Mount the Winch:**
   - Drill four pilot holes (5/16-inch for wood, ½-inch for concrete) in the blocking where the winch will be secured.



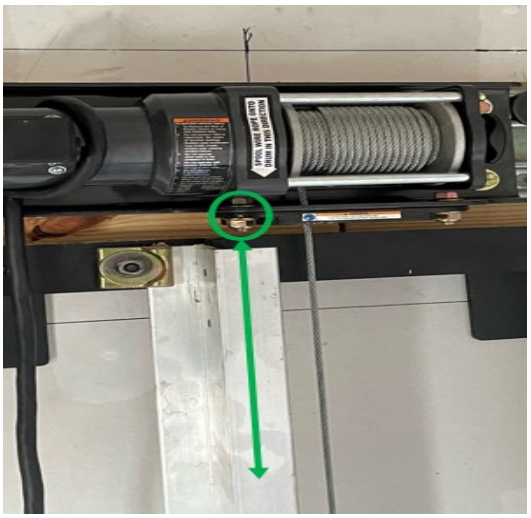

   - Attach the winch to the blocking using four ½ x 4-inch lag bolts with washers (for wood) or concrete anchors (for concrete).
   - Ensure all bolts/anchors are tight and not stripped.

Winch Installation with Extended Brackets

Extended brackets can cause interference between the winch cable and the rail brackets.

- If using extended brackets, it is **required** to bring out the winch to avoid interference.
- **For 2-inch extended brackets:** A 2-inch spacer is required between the blocking and the winch. Use ½ x 6-inch bolts when mounting this spacer.
- **If sub-brackets are extended to 3 inches or more:** Contact your manager for guidance.

Testing Winch Wire Rope and Crimp Strength

Before using the winch assembly to hoist up the MGA (Main Guide Assembly), the winch, winch cable, and the strength of the crimp must be tested.

1. **Lower and Inspect Cable:**
   - Lower the winch cable to the pit floor.
   - During lowering, carefully check the entire cable for any defects or damage.
   - If any defects or damage are found, **DO NOT** proceed; contact your manager.
2. **Install D-Ring Plate:**
   - Install the D-ring plate to the **RIGHT RAIL** blocking within 6 feet from the pit floor.
   - Attach this plate to the inside portion of the blocking so that the winch pulls in a nearly vertical direction.
   - Fully tighten all bolts down.
3. **Attach and Clear Area:**

    - Attach the winch cable to the D-ring.
    - Exit the hoistway and ensure the area is clear of danger.
    - Exercise **extreme caution** to ensure no one can be hit by falling objects or a cable failure.
4. **Route Cable Carefully:**
    - When routing the cable for the test, make sure it will not rub or push on any already mounted brackets. Contact with brackets can cut into the cable during the test.
5. **Test the Winch:**
    - Retract the winch until it stops pulling.
    - The circuit breaker on the winch should have popped.
    - Reset the breaker by pushing it back in.
6. **Final Inspection After Test:**
    - After resetting the breaker, lower the winch.
    - Inspect the cable, winch, and crimp for any defects or damage.
    - If no defects or damage are found, proceed with using the winch.
    - If defects or damage are found, **DO NOT** proceed; contact your manager.

- The winch and lift cart installation process must be followed every time the lift cart is used.
- Install the winch when hanging the top bracket or after completing brackets.
- Inspect the winch assembly for damage to the cable, cord, or winch before installing. **Note:** If damage is found, do not use the winch assembly.
- Drop the cable down to the first floor by disengaging the clutch.
- Drop the run pendant to the first floor.
- Ensure the winch is plugged in with the proper size extension cord and all cords are clear of any obstructions in the hoistway.

Rail Installation

- Once all brackets are completely installed, begin stacking the rails, starting with the rail stubs.
- Set the first section of rails on the pit base plate (pit pan), stub first. Install the bracket clips on pit pan and the first bracket.
- Completely set and align the bottom section of the rail prior to continuing with rail stacking.
- The center of the T-rail should line up with the center of the ‘V’ on the rail brackets.
- The measurement to set the rails is 4 3/8 inches from bracket face to the outer edge of the blade.
- Tighten the rail clips at the first bracket.
- Center the bottom of rail to the ‘V’ on the pit pan and tighten the rail clips.
- Use a 4’ foot level to determine where to bolt pit pan to pit. Place the level on the rail and plumb front to back and side to side by tapping the pit pan with a hammer. Once rail is centered in the ‘V’ of bracket and pit pan and is level front to back and side to side, bolt the pit pan to the pit.
- The pit base plate serves as a rail bracket.

- The pit base plate is required to be bolted to the pit floor with four 1/2-inch concrete anchors,
- The measurement to set the rail to the pit base plate is 3 3/8 inches from the front face of the rail to the front edge of the pit base plate.
- Continue stacking and aligning rails using the winch assembly by attaching rails to the cable with an eye bolt and lifting them into position.
- When installing and tightening rail clips, make sure they are straight and square to the edge of the rail.
- Use a 4' level as a straight edge when tightening fish plate bolts. Check each side of the rail blade by rocking the level at top and bottom. Once both sides are straight tighten all fish plate bolts. Double check after tightening for rail plumbness.
- Once all rails are aligned and fishplate bolts tightened, file all rail joints. They should be filed over an area at a minimum of 12 inches above the joint to a point 12 inches below the joint. This allows for the high spot to be "feathered" in rather than just at the joint.

C-Channel Support Angles

- Install the bedplate support angles using the bedplate hardware. Always run the bolts through the T-rail and angle, and the nuts on the outside of the angles.
- **Note:** The hardware fastening the rails to the angles must always be Grade 8 hardware, with bolts going through the rail and washers/nuts on the backside of the angles.
- The angles are to be installed at the top of each main rail through the machined holes provided in the rail. This is why rail stubs cannot be mounted at top of rails.
- Then level across both angles using a 4-foot level and adjust as necessary to have both angles level to each other.
- Use a torpedo level to level front to back.
- The bolts for mounting the bedplate angles to the rails shall be torqued to 80 ft-lbs.



Motor Gearbox Assembly Installation



- Install the lift cart in the rail system.
- Verify the motor is facing the access panel. If it is not the Infradrive can be swapped to the correct hand. Do this now while sitting on liftcart.
- Use a strap and winch to remove the motor from the box and onto the lift cart. This is a 2-person job: one operates the winch while the other guides the Motor Gearbox Assembly (MGA).
- Use 2 bolts to fasten the C-channel to the liftcart.
- Install the cable to the lift cart using the clevis. Make sure you screw the clevis bolt all the way in, so it does not work itself out.
- **ALWAYS** use the winch assembly and the lift cart to lift the motor/gearbox assembly into position.
- **ALWAYS** inspect the winch, winch cable, and lift cart each time before using. Replace any defective or damaged items before using.
- **ALWAYS** stand outside the hoistway when lifting the assembly into place.
- Lift the cart off the pit floor one foot, inspect all components of the lift assembly making sure all wires are clear, and the cable is straight. After verifying the lift assembly is operational, do not get into the hoistway.
- Lift the cart until it is one foot from the top of the bed plate gussets.
    - **NOTE:** If at any time you hear or see something questionable, immediately stop lifting and make a visual inspection.



- Monitor the winch from the landing and ensure the cable is spooling correctly on the winch.
- Only after the MGA is just above the bed plate support angles, enter the hoistway using a ladder to push the MGA off the lift cart evenly in a controlled movement onto the bedplate support angles.
    - **NOTE:** When using extended brackets, keep in mind not to push the MGA too far past the angles.
    - **NOTE:** This is the only time a person shall be inside the hoistway while the motor/gear box is being lifted into position.



- After the C-channel/MGA is off the lift cart, make sure at least one bolt and nut are installed on either side of the bed plate to make sure the C-channel/MGA is secure.
- **Note:** If this job has an Encoder, mount the bracket for the encoder belt to the bottom of the bedplate now.
- Ensure that the C-channel is centered on the support angles before tightening hardware.
- Do not remove the lift cart from the hoistway until the motor/gearbox is securely in place with all appropriate hardware tightened down. The bedplate shall be torqued to the angles at 112 ft-lbs.
- Once in position, lower the lift table and remove it from the hoistway.
- The brake can be rotated to face the release arm towards the access panel.
- Leave the emergency lowering bag next to access panel for home owner.

Torque specs on Infradrive.

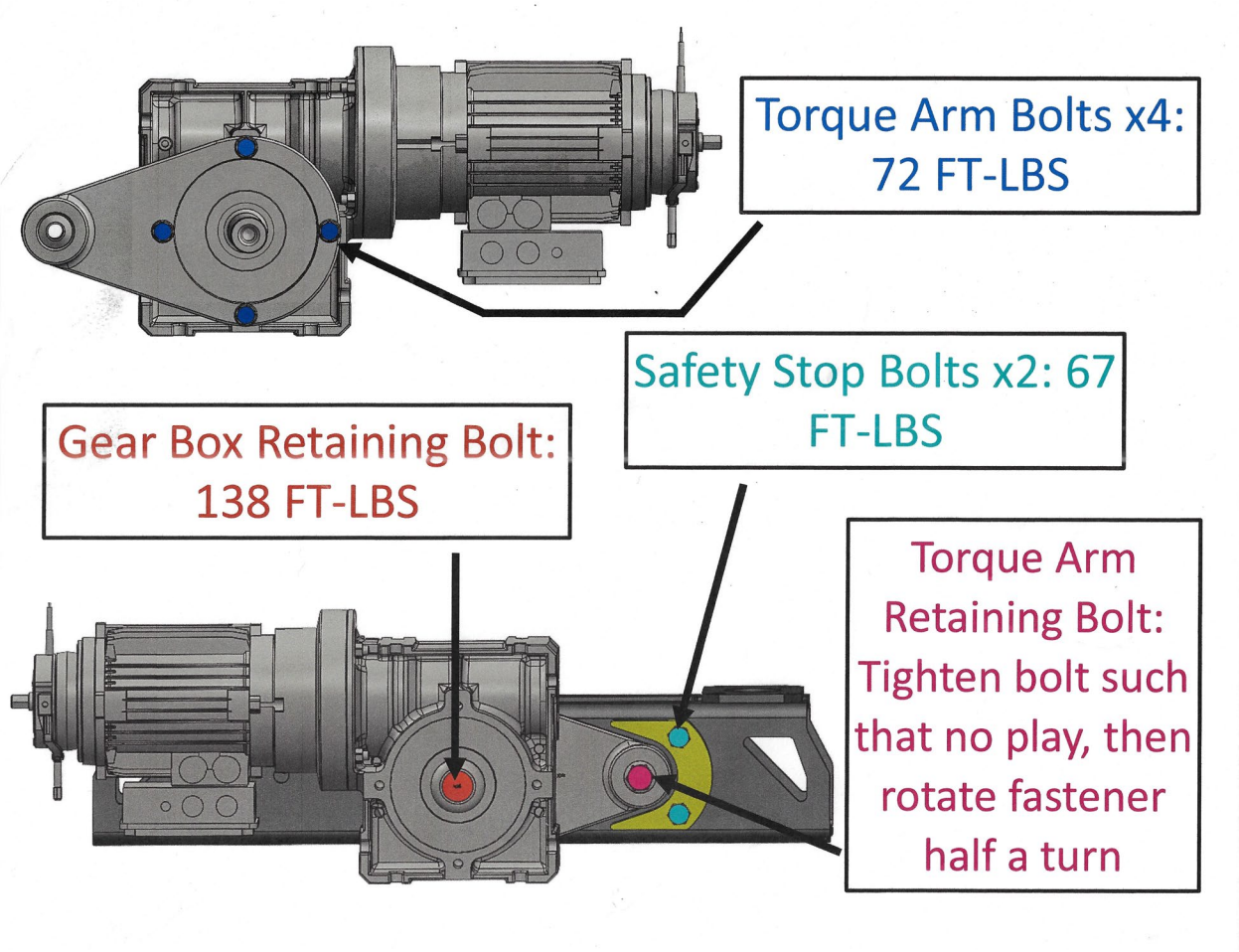

Z-Rails

- Install the Z-rails. Install the 10’ section with the ½-inch holes drilled during prep at the pit pan, and the cut stubs will be on top.
- **Note:** The rails are reversible and may be used for either side. The rails are fastened to the brackets using the gold clips pre-installed on the brackets.
- Keep a 10-1/8 inches to 10-3/16 gap between the Z-rails.
- Once the bottom Z-rails are positioned properly, stack the next 10’ section on top. All fish plates should be installed on the outside of the Z-rails, so as not to interfere with the CW frame. Install the bolts on the inside of the Z-rails and use the lock nuts provided on the outside of the fishplate.



- Use a Vise clamp to hold the joint together prior to tightening fish plate bolts. After removing clamp if you still have a lip at joint use a hammer to hit into place. Once completed, file the Z-rail joints until they are smooth.
  Note – It is important to file all burrs and rail joints smooth, as this will create noise in travel.



Counterweight Frame, Ropes, and Car Sling
Counterweight (CW) Frame Installation:



- Use the eye bolt on the 5/8-inch hole on the left side of the CW frame when hoisting.
- Hoist the CW frame in between the Z-rails and lower onto the pit bumper using the winch.
- Install the CW guides, which consist of a metal plate and a hard plastic guide shoe. The metal retainer plate will be over the plastic guide shoe.
- Two bolts hold each CW guide in place to the pre-threaded holes on the CW Frame. Hand tighten, set the guides so that the frame is centered in the rails and that the guides and plates are square and flush with each other, maintaining a 1/16-inch gap between the guide and Z-rail. Once this is accomplished, tighten the hardware.



    - **Note:** DO NOT overtighten hardware, bolts will break when over-torqued.
    - **NOTE:** There should not be any pressure on the Z-rails; this is just a guide.
- Using the winch, hoist the CW frame up and repeat the above steps to install the bottom CW guides.
- Lower the CW frame back down onto the pit pan.
- At the top floor, lower the cables, taking great care and unspooling them without any kinks or twists.
- Take the end of the cable that has not been shackled, and feed through the bottom right side of the C-channel up and over the sheave.
    - **Note:** The sheave guard will need to be removed prior to installing the cables and reinstalled after the cables have been run over the sheave.
- Pull all excess slack out of the cables down to the pit floor, leaving the already prepped shackles hanging at the height of the top of the CW Frame.
- Drop all three shackles into the holes that are centered on the top of the CW frame. Ensure cables are in the same order they are coming off the sheave and not twisted around one another.
- Fasten shackles to counterweight frame, use 3 sets of Bellville washers, one flat washer, two nuts and cotter pin. Run bottom nut 1” above cotter pin hole.
- Roping calculation: (Pit Depth + Travel - 11 inches). Mark on z-rail with sharpie. This is where the bottom of the CW frame will sit.
- Hoist the CW frame up the Z-rails while continuously pulling the slack of the cables.
- Secure the CW frame by using two large vise grips clamped to the Z-rails under the CW frame.
    - **Note:** Make sure the vise grips are clamped tight and ensure the nose of the vise grip is holding the load. The CW frame is empty.

Ropes:

- Pull the ropes tight and measure 28 inches off the ground to establish the top of the shackles. Make a mark on the wall and transfer to each cable.
- Shackle the cables to making sure the 28” mark is on the load bearing side of cables.



- Cut the excess rope from the tail end, leaving a 2–3-foot tail. Use electrical tape and zip ties to secure the tail. Leave clips off to adjust tension after sling is installed.
  - **Note:** It is critical to make sure the cables are pulled tight when determining cable length, as this will affect how much adjustment will be needed when tensioning cables.
  - **Note:** If overhead is at minimum clearance 3” will need to be subtracted from the 28” mark.

Sling Installation:

- Hoist the sling into the shaft using the winch and a hoisting strap attached to the cross head of the sling.
- With the sling suspended, install the right side first. Make sure the T-rail is in the safety block, retainer, and rollers. Push the left side of the sling into place. Attach the safety block, retainer, and top roller to the left side to match the right side.
- Install the slide gibs and adjust all four using the thumb bolts that have been pre-installed during prep so that the sling is centered between the rails at all four points. The slide gibs should be set to a point where they just slightly meet the T-rails. The best way to do this is to tighten the guides evenly on both sides until they touch the rails, then back each guide off the rail by half a turn to achieve 1/16-inch total clearance. The slide gibs should have no pressure on them. The setting of the slide gibs should be checked throughout the entire travel distance prior to building the cab. After the slide gibs have been centered, the jam nuts need to be tightened to secure the thumb bolts.

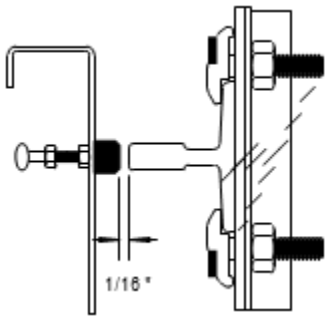

  - **Note:** Make sure when adjusting the thumb bolts, the bolts are fully seated in the slide gib holes.
- Connect the shackles to the sling hitch point. Verify that the ropes are not tangled and the shackles are being installed in the correct order.
- Hardware is installed in this order: Spring, shackle tube, one set of Belleville washers, flat washer, two nuts, and cotter pin.

- Run the nuts up 3-3/4 inches to the bottom of the washer above the top nut to the bottom of the shackle rod to obtain the proper distance (1/16 inch – 1/8 inch) from the bottom of the shackle to the safety activation arm (the activation arm will be installed later). Make sure the jam nuts are tight. Butterfly the cotter pins when finished. (Refer to Fig. 21b in source).
- Install the sling extension. Use a minimum of 6 fasteners on each side (4 on each side and 2 in the bottom on each side).
- Measure the platform and make sure it does not extend more than 9 inches over the sling extension or a minimum of 2 inches.
- If the sling extension is larger than the platform due to hoistway dimensions, it can be cut down on site.
- **Note:** Slotted holes on the sling extension must have flat washers.
- Upon sling completion, set the sling on the safeties. To do this, lower the winch while manually pushing the safety linkage arm up, which will engage the knurled rollers onto the T-rail. Disconnect the winch from the sling and spool up the winch cable. Then proceed to uninstall the winch, as it is no longer needed for the installation.
    - **Note:** When spooling the winch, keep tension on the cable to prevent damage and to ensure the cable winds evenly on the drum.
- Lower the CW frame by removing the vise grips.
    - **Note:** When removing the vise grips, hold all 3 cables on the left-hand side (sling side). The traction of the sheave will support most of the weight, but the CW frame will drop slightly after vise grips are removed.
- The structural portion of the installation is now complete and ready to run upon completion of the machine room with the use of the temporary run button.

Controller & Electrical Equipment

Controller Installation:

- When installing the machine room, layout is critical. Keep in mind all components that need to be wired and their location.

REI Provided Items:

- **Main Controller:** The main electrical enclosure containing the PLC, connection board, disconnects, and power supply. The disconnect on the enclosure should be reachable from the access panel to cut off power; if not, a separate disconnect will need to be installed.
- **VFD (Variable Frequency Drive):** Should be visible from the access point. Wired from the main controller to the motor.
- **UPS (Backup Battery):** Needs to be reachable from the access point. Wired into the main controller.
- **Reset Key Switch (FL Only):** Should be reachable from the access hole. Wires into the main controller.
- **Floor Wires (Low Voltage Wires):** Run from the main controller to their respective floors, including the Pit Float switch and Pit Stop button.

- **Travel Cable:** Run from the main controller to the cab, with Kellum grips installed on each side.
- **Surge Suppressor Kit (Optional):** Will be installed on the left side of the controller.

GC Provided Items:

- **Power Wires:** GC provided power wires need to be run to the main controller, including Main wires (240v) and cab light power wires (120v). These wires need to be dedicated and per code in the home's respective jurisdiction.
- **Phone Line:** Wired to the main controller (typically cat5).

Machine Room Rules:

- When installing any electrical enclosure, there must be a minimum 3 feet electrical clearance in front of the enclosure. This is a National Electrical Code requirement for safety.
- No device in the machine room should be mounted below the bottom of the gear box. Consider if any car top devices (4x4 boxes, gate switches, PGO, lights, sight guards, etc.) will extend above the bottom of the gearbox when the car is at its furthest upward travel. If so, account for this when placing devices on walls to prevent striking items.
- Flexible Conduit/Travel cable should be strapped every 12-24 inches.
- **Note:** Flexible Conduit cannot be run longer than 6 feet.
- Low voltage wires may be stapled.
- REI supplies 12 inches x 36 inches x 3/4 inches piece of painted plywood to serve as the controller backboard. This will be used to mount the main controller and the VFD. The controller board may be cut down if the main controller and VFD need to be in separate locations.
- The machine room may be installed in a separate machine room/attic. When penetrating walls to run wires into the hoistway, seal the holes properly using fire caulk.
- **Note:** When wiring the machine room, treat every house feed as if it is always energized. Ensure that when wiring the house feeds, power is off, and the breaker is locked out.
- **Note:** Never leave a circuit jumped out when operating the elevator. If it takes longer than 30 minutes to resolve an issue, contact your field manager.

- Completely fill out the controller label on every job, including the job number and serial number on the data tag along with the breaker panel location.
- At job completion, the controller is to be cleaned and wiped down all debris (metal shavings, concrete dust, wire striping, etc.). All spare wires should be taped or laced with wire ties and positioned by cable.
- **Temporary Run Button:**
- After completion of the machine room and structure, install the temporary run button to continue installation.
- **NOTE:** When using the run button, the PLC Power Plug should be unplugged from the controller, including PNP and TS.

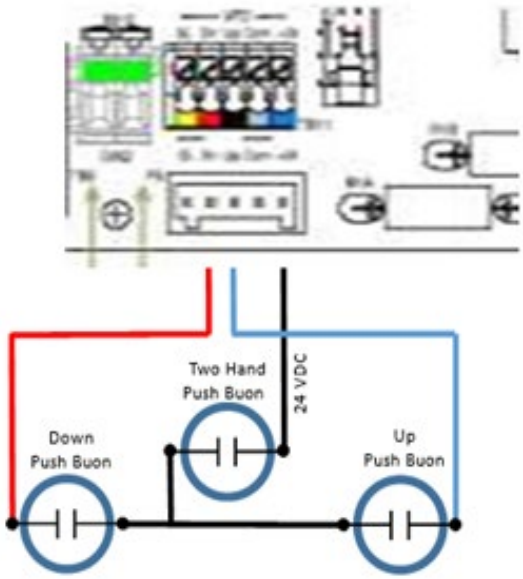

Main Controller Connections:

- Travel Cable, UPS, Drive, and Phone Line connections.
- The black shielded pair from the travel cable shall not be stripped more than 1 ½

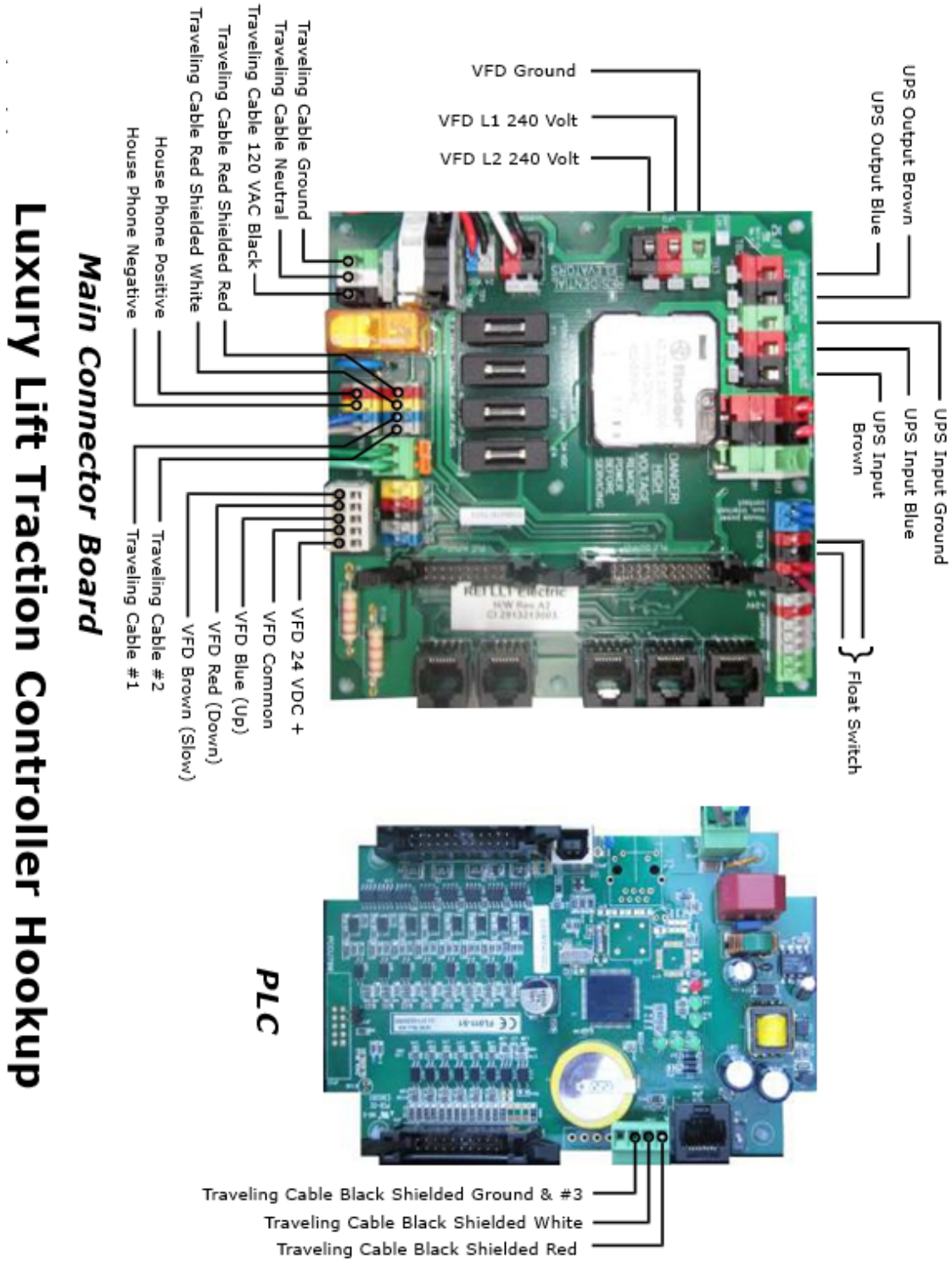

Fuji Drive Installation:

- A diagram displays all FUJI Drive connections.

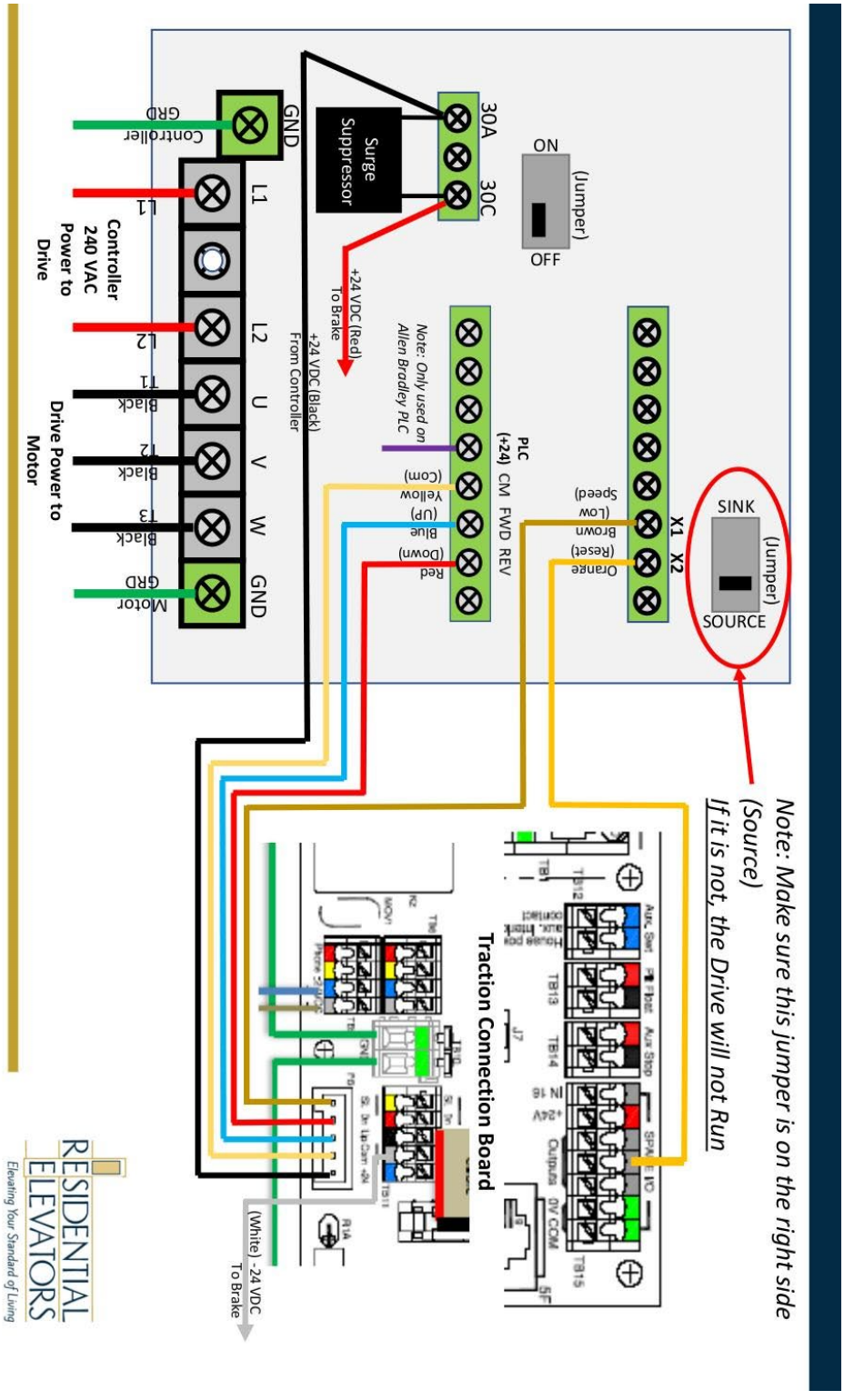

TRACTION Surge Suppressor Kit Installation:

- The Traction Controller uses two Surge Suppressors for protection: Main 240 Volt (DTK-120/240CM+) and Cab Light 120 Volt (DTK-120HW).
- The Main 240 Volt and Cab Light 120 Volt Surge Suppressors should be mounted as close to the circuit breakers as possible. The black wires connect to the bottom of the circuit breakers, and suppressor leads should be cut and stripped as short as possible.

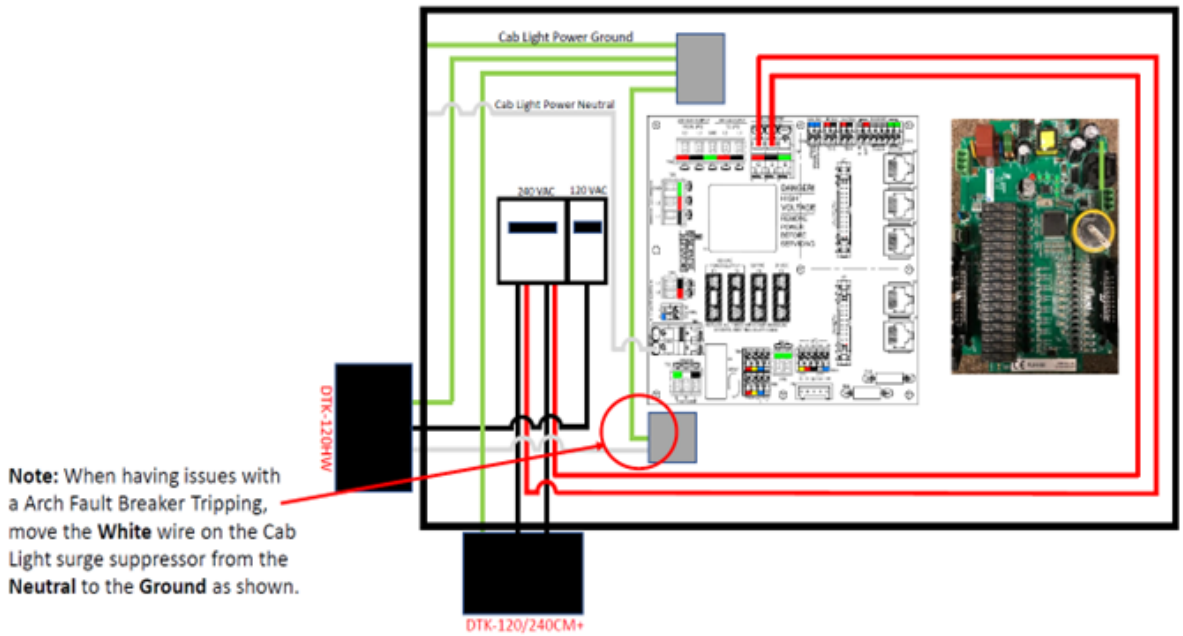

Platform Installation

Setting The Platform:

- Set the platform on the sling and square it to the bottom floor landing, 1 inch on each side as a baseline.
- Align landing door returns to cab wall returns.
- Run the elevator to all floors and find the landing floor that is tightest to the platform. ***Square the platform to the tightest landing.***
- **Safety Alert:** The platform will not be secured to the sling while setting. DO NOT stand on edges.
- Check counterbalance before riding; 20 weights should be in the frame.
- Running clearance should be ½ inch minimum and 1 ¼ inches maximum.
- ½ inch clearance on walls from the hoistway is required.
- **Note:** If the running clearance is tightest at the top landing, a level needs to be used to ensure the door frame is plumb and will maintain minimum running clearance with the car top when the cab is built.
- Bolt the platform to the car frame base by drilling a hole through the platform using a 5/16-inch drill bit. Then use the 5/16-inch platform bolts provided in the hardware box. Use a minimum of 4 bolts per platform and position them not under a cab wall.
- Once the platform is securely fastened to the car frame, level the platform in both directions prior to building the cab. Leveling the platform is critical for walls, ceiling, and gates to function as intended.
- **Note:** Use an engineered ruler when setting running clearance and documenting 3/4x4 measurements.
- **Note:** When setting the platform, the 3/4x4 rule must be followed. The GC needs to be informed immediately of any changes that need to be made to the door jamb placement to ensure that baffles will not be necessary.
- **Note:** Verify that the ropes are at the proper length and the car sill over-travels the top floor landing 3-5 inches while the counterweight frame is on the pit bumper.
- Ensure that the leading edge of the sill plate is in line vertically with the door jambs in relation to the strike point of the gate. Set the sill plate to match the average of the difference if it doesn't reduce the running clearance on the side of the cab to the shaft wall. The cab gate strike point must line up with a minimum of one landing door.
- **NOTE:** If there is no trim provided on the inside of the shaft, confirm with the GC the thickness intended on being used prior to setting the platform. Remember it is REI policy that the maximum thickness of the inside trim is not to exceed 1/4 inch to help avoid "3/4 x 4 Rule" issues.
- **For Single-Opening Cabs:** Verify the platform size of the car. Then verify the rail side designation. Make sure, based on the hoistway size, that you have a minimum of 3 inches clearance past the platform on the COP wall side, and confirm you have the proper running clearance on the car opening side and a minimum of 3 inches opposite the car opening side.
- **For Adjacent or Pass-Thru Cabs:** The same rules apply, a minimum of 3 inches is required for the travel cable and COP.

- **Note:** At the completion of the installation, if a running clearance or "3/4 x 4 Rule" violation exists, you must disable the elevator by leaving the job in disabled mode until the violation has been addressed. Only an RE employee can take a job out of disabled mode once the violation has been corrected.

Leveling The Platform:



- Start leveling the platform from the rail wall.
- Use composite shims to level the platform up as needed, while working in a counterclockwise direction.
- The outrigger is adjustable to level the strike wall.
- Fill any voids between the platform and the sling after leveling with taper shims.
- Take into consideration heavy cab walls; these could affect platform leveling after installation.
- **Note:** An unlevel platform can lead to several issues with the gate, cab, and ride quality.
- **Note:** Be sure to check the level of the platform again after conducting the drop test.





Note on counterbalance

Install 20 weights into the counterweight frame. This will balance out the weight until the end of the job when all weights are installed at the end.

- During installation the weight of the car will vary depending on the stage of installation.
- It is important to take great care to ensure that the weight between the car and counterweight does not vary excessively. Insufficient weight in the frame may cause the wire ropes to slip over the traction sheave and the car may fall. Alternatively, if

too much weight is placed in the counterweight frame, the car may even slip up in an uncontrolled manner. Continually monitor the weight ratio to ensure safe operation during installation.

- You can do this by using an amp meter and checking the current used from the AC power supply. Run the elevator in both directions, if the current is roughly equal in both directions, we know we have a balanced load. If the current in the up direction is less than the current in the down direction, we know that the counterweight is too heavy as it is helping the motor lift the load. You can also check the amp reading directly from the drive. Remove weights one at a time until the amperage is roughly equal.
- Add weights if the current is lower in the down direction. A 6'8'' sling with an outrigger attached is 190lbs.
- A 8' sling with an outrigger attached is 210lbs. The counterweight frame is 205lbs.
- Each counterweight is 14.25lbs.
- Check your run by, (How far elevator travels above top floor before Counterweight frame hits the buffer) this should be 3-5 inches above top floor level. Unless it is a job with minimum overhead, then you will have 1inch of run by on a 6'8" sling with 96" of overhead.

Home Elevator '3/4 x 4 Rule'

- Residential Elevators. Inc. (REI) manufactures and installs a fully code compliant elevator per the ASME ANSI A17.1 2016 Safety Code for Elevators and Escalators Part V Private Residence Elevators Rule 500.4b.

Elevator Safety Code Section 5.3.1.7.2 and 5.3.2.8.3:

- The distance between the hoistway face of the hoistway door and the hoistway edge of the landing sill (threshold) shall not exceed 19mm (3/4 inch) for swinging doors.
- With swinging doors and car gate in the fully closed position, the space between the hoistway door and the car gate must reject a 100mm (4 inches) diameter sphere at all points.
- Running clearance between the finished floor threshold and elevator gate sill must be between ½ inch and 1 ¼ inches while not violating the ¾ inch x 4 inches rule.
- Ensure that all frame rough openings are square, level, plumb, and in-line with each other, at all landings.
- **NOTE:** Concrete block/masonry shafts and some commercial metal door frames can often create "3/4 x 4 rule" violations. Review the 3/4 x 4 Rule. At the completion of the installation, if a 3/4 x 4 violation exists, no elevator is to be turned over, regardless, no exceptions.
- **GA ONLY 5.3.1.7.2:** Clearance Between Doors or Gates and Landing Sills and Car Doors or Gates. The clearance between the hoistway doors or gates and the hoistway edge of the landing sill shall not exceed 19 mm (3/4 in.). The distance between the hoistway face of the landing door or gate shall not exceed 75 mm (3 in).

Home Elevator 3/4" x 4" Rule

Residential Elevators manufactures and installs a fully code compliant elevator per the 2016 ASME ANSI A17.1 National Safety Code for Elevators - Section 5.3 Private Residence Elevators.

ASME 5.3.1.7.2 of the above referenced code Clearance Between Hoistway Doors or Gates and Landing Sills and Car Doors or Gates. The clearance between the hoistway doors or gates and the hoistway edge of the landing sill shall not exceed 3/4 inches. The distance between the hoistway face of the landing door or gate must reject a 4" diameter sphere at all points.

Note: Concrete block / masonry shafts and some commercial metal door frames can often create Rule violations.

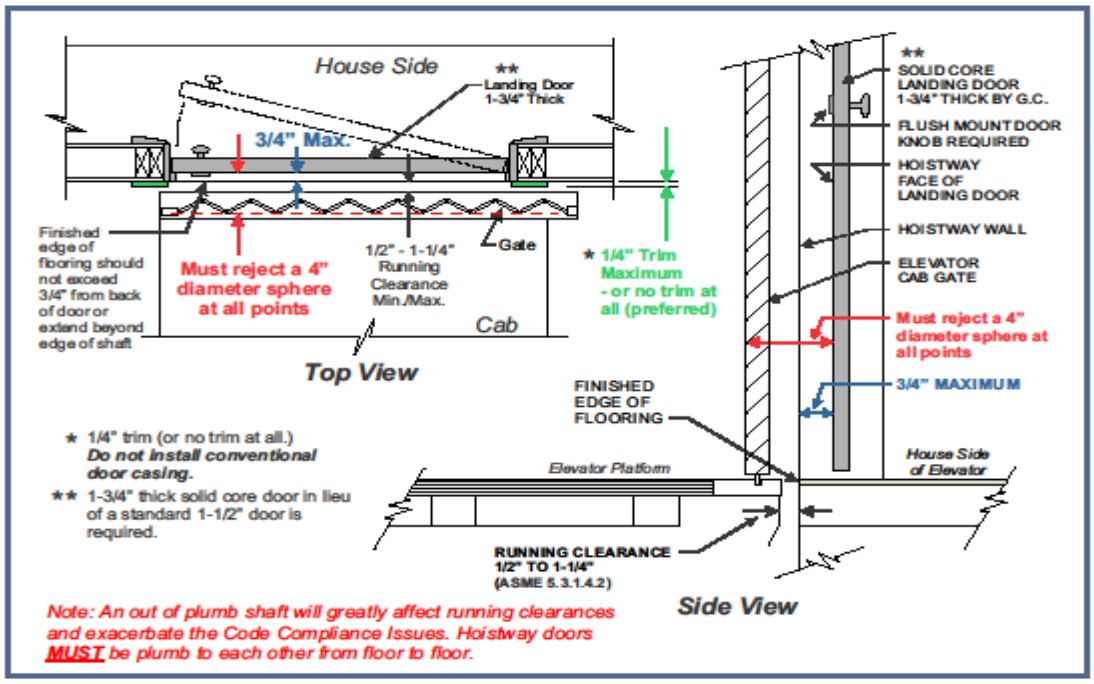

This is a code requirement. Residential Elevators takes pride in ensuring safety in the use of their equipment and as a policy wants to make sure all Builders, Architects, Developers, Owners / Users are aware of and adhere to this Code requirement.

This is a safety issue.

THE INFORMATION CONTAINED HEREIN IS SOLELY OWNED BY RESIDENTIAL ELEVATORS. ANY REPRODUCTION IN PART OR AS A WHOLE WITHOUT WRITTEN PERMISSION FROM RESIDENTIAL ELEVATORS IS STRICTLY PROHIBITED.

RESIDENTIAL ELEVATORS
Elevating Your Standard of Living

HallStations/Landing Operator Panel
Standard Hallstations:



- Hall stations are to be mounted at a height of 42 inches to the centerline of the fixture unless the customer requests a different height. When possible, always consult the GC or homeowner prior to installing the hall stations.
- When determining the height, take into consideration an adjacent light switch, etc.
- When determining the hall station placement horizontally, consider the width of the mounting space. If the space is under 12 inches wide, center the hall station. If the mounting space is over 12 inches, use a center point of 4 inches off the door trim.
- If there are any obstructions or no room to mount the hall station on the hardware side of the door, consult with the GC on other options, like the other side of the door or on the trim.
- Keep aesthetics in mind before mounting.
- Remember that in flood areas, all electrical components, unless pertinent to the operation of the elevator, are required to be mounted above the Base Flood Elevation (B.F.E.).
- Make sure the fixture is plumb. Use a torpedo level or measure off the door trim/casing to plumb the fixture.



- Always use the proper RJ45 & RJ12 connectors when installing the hall stations.
- Always ensure the mounting bracket is installed properly and level using fasteners in all 4 mounting holes and use the proper sheet rock anchors when required.
- If mounting on sheet rock, use a 1-inch Paddle bit at the CenterPoint before mounting frames. This confirms what's behind the mounting surface, avoiding other house wires and ensuring correct hardware.
- Next, drill a minimum 1/2-inch hole through the wall and run the flat cable through the wall, leaving a minimum of 6 inches to install the connectors on the ends. Insert them into the switch and mount the hall stations on the bracket attached to the wall, ensuring they are plumb.
- **Flush Mount Hall Stations:**
- Use provided security bolts to mount the face of the Landing Operator Panel (LOP) to the GC mounted housing inside the wall.
- Plumb the LOP with a torpedo level or by measuring off the trim nearby.
- Use the knockouts provided and a grommet when running wires into the housing. Use a ½-inch bit to drill into the hoistway.

Touchscreen Hall Stations:

- Use provided security bolts to mount the face of the LOP to the GC mounted 2 gang box inside the wall.
- Plumb the LOP with a torpedo level or by measuring off the trim nearby.
- Use a round four wire in addition to the wires you would normally run for regular hall stations. This wire will run from the machine room and be “Daisy Chained” from each hall station to the next (e.g., machine room to 3rd floor, 3rd to 2nd, 2nd to 1st). The wires should be no more than 1 ½” sticking out of insulator and twisted together in the terminal.
- **Note:** Touchscreen Hall stations are only used on jobs that also have a Touchscreen COP.
- When setting up the Touchscreen COP, you must enable Touchscreen Hall stations on the setup screen. When you press enable, it will take you to a screen to enable the hall stations individually, where you select all floors that have a Touchscreen Hall station.
- Finally, the software will need to be downloaded to touchscreen hall stations. Connect the USB cable to the hall station and download the correct software. Use Flexi download to download the application from the ShareFile to the hall station. There is a different Touchscreen application file for each landing/hall station. Only check firmware and application; there is no ladder for this file.
- Enable the touchscreen hall stations by tapping the purple button on the setup screen of the COP, then proceed to enable each hall station according to every landing that has one.

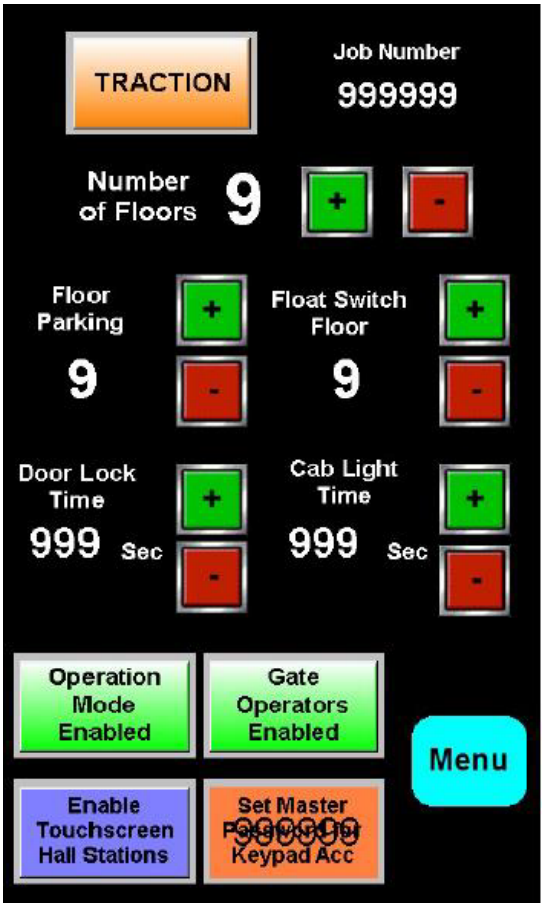

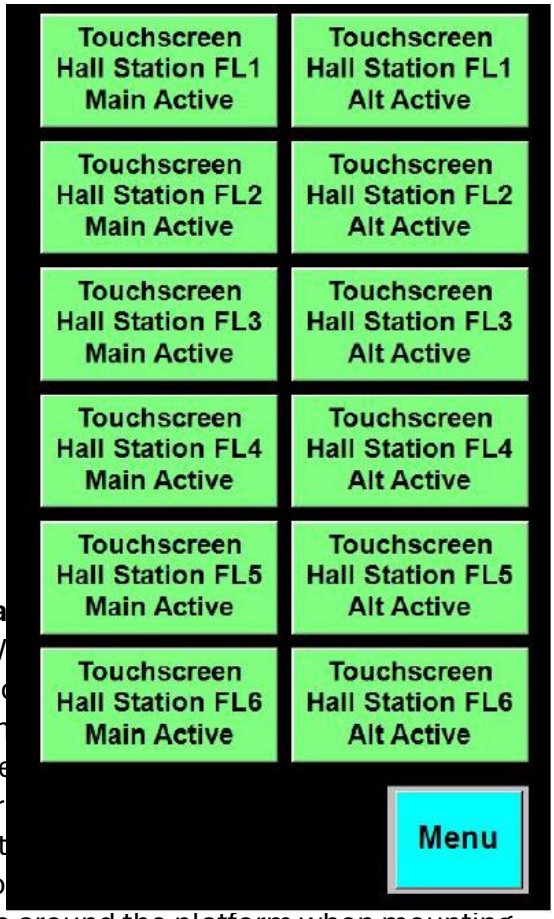

Keyed Ha

- W

#3 interfa

- Th

to this inte
controller
four wire t
hall statio

- **Tip:** Keep in mind how much space you have around the platform when mounting the interface box. Avoid mounting the box close to the travel cable loop.

Standard (Non Weather Proof) Keyed Hall Station
To Interface Module Wiring (Car Here & Car Call Indicator)

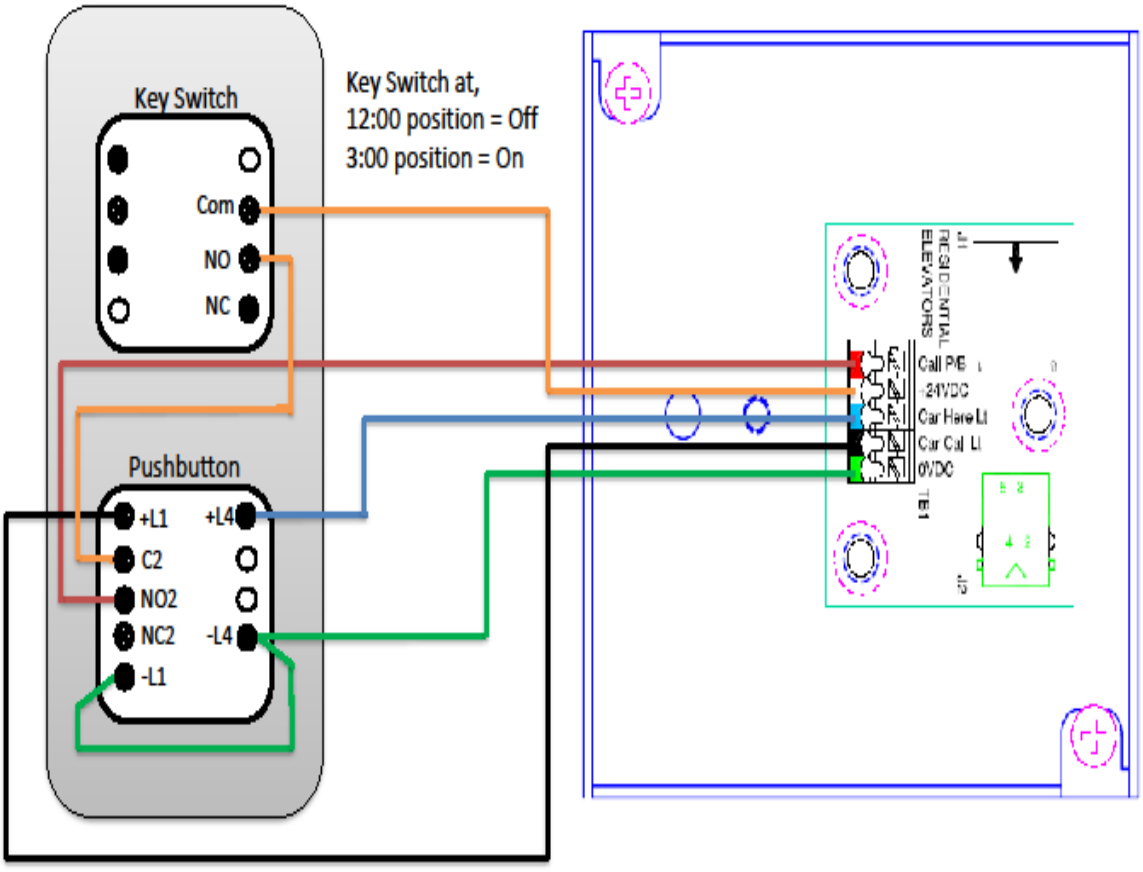

5.3.1.18.3 Key-Operated Switches. Any car exterior to a residence shall be operated by means of a key switch. Key-operated switches shall be of continuous pressure spring-return type

Hall Station Interface Module Wiring

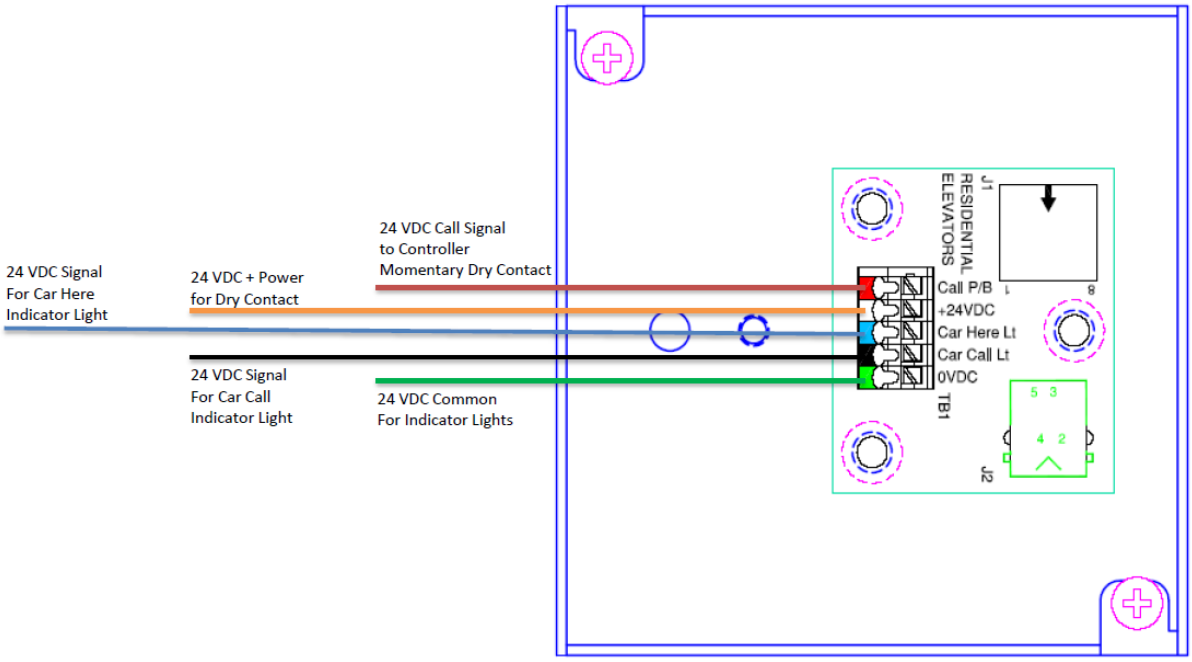

Weather Proof Keyed Hall Station To Interface Module Wiring (Car Here Indicator only)

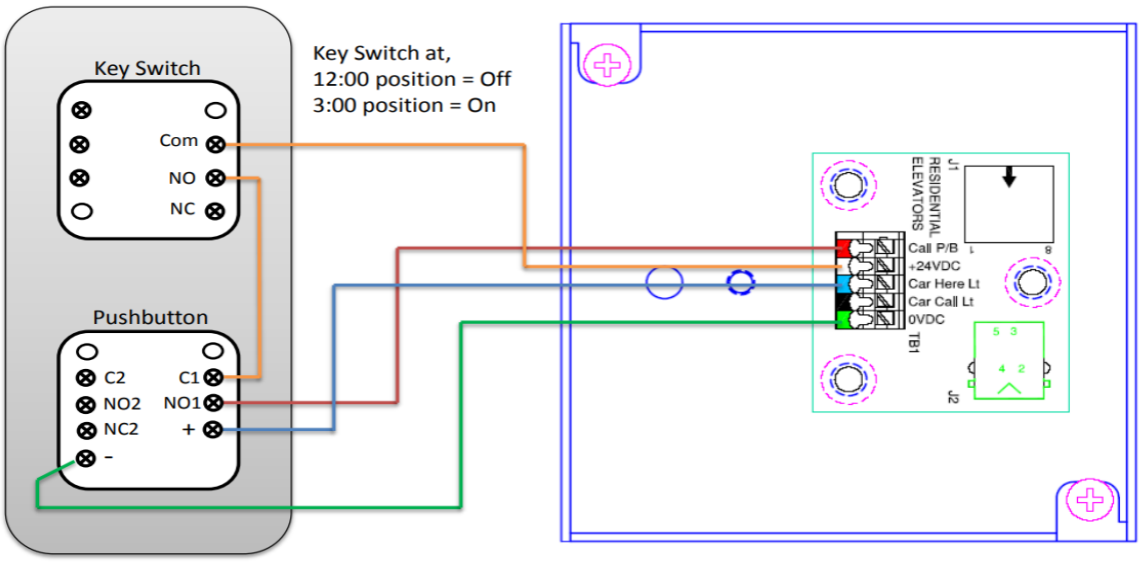

5.3.1.18.3 Key-Operated Switches. Any car exterior to a residence shall be operated by means of a key switch. Key-operated switches shall be of continuous pressure spring-return type 2

Interlocks

Interlocks with Notched Doors:
Work done by others.



- **Note:** The Door Template is designed for use with right- or left-hand doors; just flip the template over 180 degrees.
- Measure up from the bottom of the door 67 inches to the bottom of the template, then mark the cutout on the face of the door. Repeat it on the opposite side of the door.
- Cut out the door, then close the door, and mark and cut out the doorstop at the same place as the door cutout.



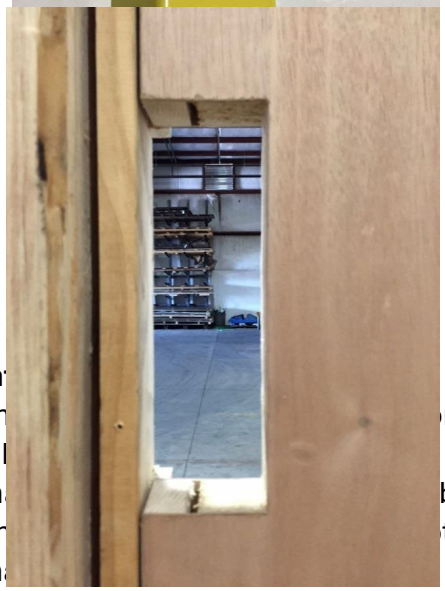

Standard Door **In**

- **Note:** Doors ar re arriving to jol
- Make sure th b has at least or t, install a m stock prior to interlock installation.

1. Make sure all doors close tightly against the door stop using only the door hardware provided by the homeowner or the GC. If this is not the case, it will affect the operation of the REI door lock; contact your sales rep and inform them.
    - **Note:** If there is no door hardware at installation to hold the door tight to the doorstop when marking the door jamb.

2. Use the yellow template with four holes and two pegs to mark your door. Rest the pegs on the door cutout on the outside of the door and flush the template up with the side of the door. Now use a pencil to mark the holes in the template.



3. Remove the template and drill all four holes with a 1/8-inch drill bit.
4. Mount the orange template to the door. Close the door and mark the front pilot holes for the interlock on the door jamb.
5. Remove the orange template from the door and mount the keeper plate using all four security screws.
   - **Note:** If the doors are 1 3/8 inches thick, a spacer from your truck stock will be needed when mounting the keeper plate.





6. Drill the holes marked on the door jamb with a 1/8-inch drill bit. Then mount the interlock to the jam just using the front holes.
7. From inside the hoistway, standing on the platform, close the door and ensure alignment is correct. Adjust if needed, shimming with interlock shims from your truck stock to correct alignment.
8. After alignment, install the back screws.
   - **Note:** Depending on the doorstop width, you may not be able to install the back mounting screws. You will not need to use the jack screw in this application; you can dispose of it.

9. After the interlock is mounted, determine the location of the hole for your RJ12 hole. This hole should be just under the interlock and close to the back of the jamb. Use the long 3/8-inch drill bit and aim as far back toward the corner of the hoistway. Remove the interlock to drill this hole if necessary.
10. Feed the wire through the hole, crimp the RJ12 onto the end, and plug it into the interlock.
11. Use a screwdriver (Do Not use a cordless drill) to mount the cover onto the interlock. (Refer to
12. Ensure there are no problems with the access key opening the interlock.



Interlock/Strike Lock Installation Manual
Compatibility & Requirements:

- Compatible only with 1.75” thick doors.
- Additional hardware is required to hold the door closed when unlocked; options include a magnetic catch, ball catch, or spring hinges.
- Once installed, the maximum allowable gap between the strike plate and the latch face plate is 1/8”.

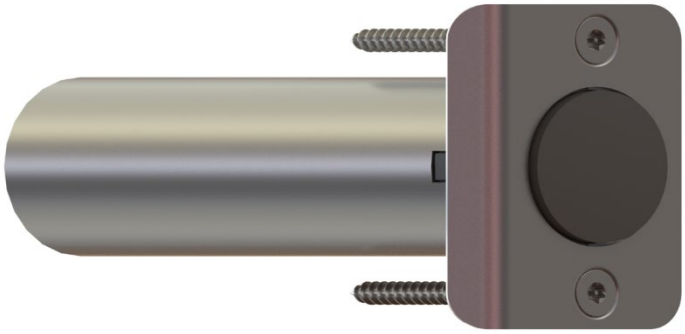

- The Strike Lock and dead latch must be installed at the same height (±1/16").
- The Reed Switch and Magnet must be installed at the same height (±1/8").
- Ensure no electrical or plumbing is located within 12” of the Strike Lock or reed switch.
- Under normal circumstances, the jam width should be the same as the door thickness. If weatherstripping is used between the door and stop, this should be accounted for in the jam width and hole offsets.
- If a magnetic catch is used as the door holding hardware, it must be installed at least 6” away from the reed switch.

Components Overview: The system includes:

- StrikeLock
- Dead Latch (Included with StrikeLock)
- Magnet for Reed Switch
- Reed Switch
- (Dummy Handle is not provided)
- Micro Controller

2. Preparation

- The installer will prep (drill hole).
- Metal jambs are prepped by the General Contractor (GC).
- The door should be prepped for a residential strike.
- Remove the existing strike plate, if one is installed.
- Close the door and mark the vertical center of the deadlatch bore.
- Install the deadlatch kit into the precut hole in the door.
- **Door Holes for Handle and Latch:**
  - Mortise depth for Latch Plate: 1/8”.
  - The mortise should be centered on the door thickness.
- **Reed Switch /Magnet :**
  - Must be at the same height as the reed switch in the jamb.
  - Centered on the door thickness.

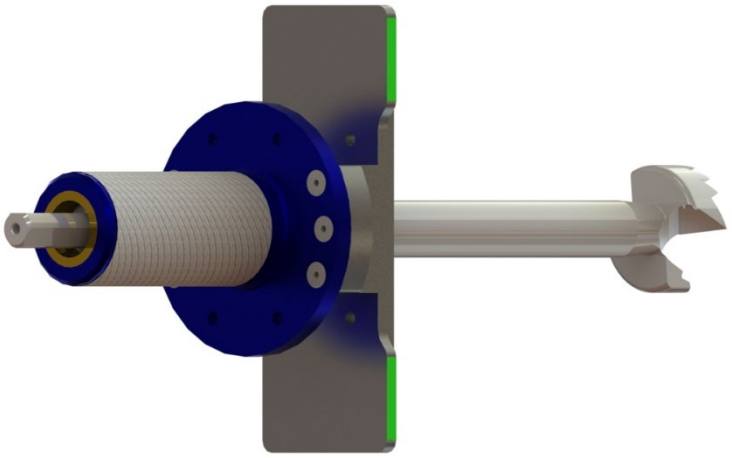

Jamb Preparation (Strike-Side):

- Place painter's tape on the door jamb around the strike area.
- Orient the drill tool according to the door thickness and place it against the doorstop.
- Drill bore a minimum of 5” deep. Use a custom install tool to center and drill the StrikeLock hole.
- Drill a cross-bore into the hoistway with a ¾” bit.
- Clean out the holes and insert the interlock.

- **StrikeLock Mortise:**
  - Mortise depth: 1/8”.
  - Centered on door thickness.

3. Installation

Interlock/StrikeLock Installation:

- Insert the interlock into the jam, taking care to route the wire safely.
- Secure the interlock with the 2 provided security screws.

Deadlatch Kit Installation:

- Install the deadlatch kit into the precut hole in the door.
- The thumb turn on the hoistway side of the door is a store-room style latch, meaning it will spring back to its latching position after every use. Verify that this is working properly.



Micro-Controller Box Connection:

- Attach the micro-controller box to the wall where it won't be damaged.
- Connect the box to the interlock, reed switch, and hall station.
- Terminals are labeled



Reed Switch

- Install within 1 foot of top of door.
- Drill 3/8'' hole for switch in door frame, wire switch with round 4 conductor wire.
- Install the magnet in door at same location of switch. Counter sink hole the size of magnet used.
- Attach the opposite end of wire to an RJ-11 using outside opposite pins.

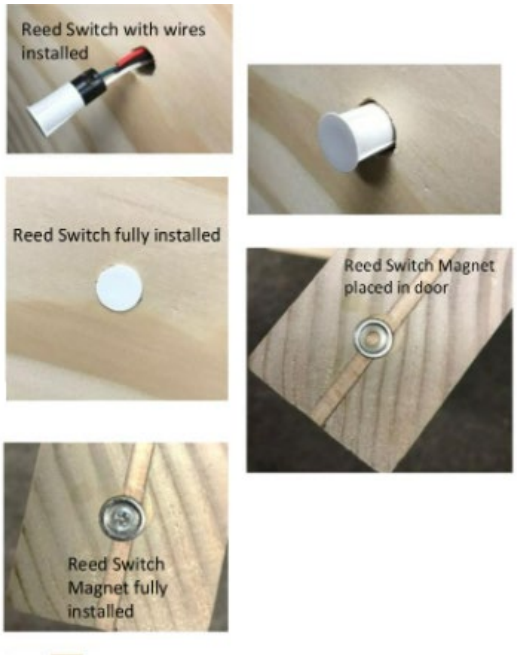

Strikelock Trouble Shooting

1. **Troubleshoot without entering maintenance mode.**
2. **Ensure software is updated to the most current version.**
3. **Check alignment of lock vs. latchbolt – must be within 1/8" of center.**
4. **Check door pressure – the door should move within the StrikeLock without requiring significant force.**
5. **Verify door holding hardware is in place (e.g., magnets, rollers, spring hinges, etc.).**

6. **Gap between StrikeLock faceplate and deadlatch bolt faceplate must be between 1/32" and 1/8" (components should not touch).**
7. **StrikeLock faceplate must not bow when secured (common on jambs without steps).**
8. **If maintenance mode was enabled:**
    - **For push button COP: F11 clear the PLC, and reflash to exit maintenance mode.**
    - **For touchscreen COP: Deactivate maintenance mode before final testing.**
9. **Complete 20 cycles on each landing regardless of landing reported.**

Photo Eye Brackets and Encoder Belt/Brackets

Photo Eye Brackets:

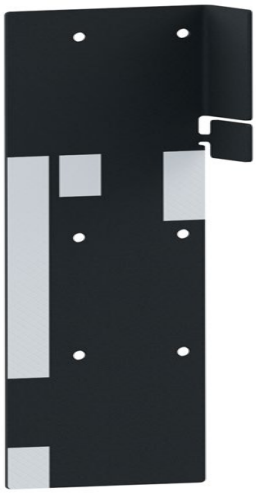

- On a standard push button elevator, mount the Photo Eye Brackets once you have a running platform.
- The photo eye brackets will be taped uniquely to the floor they belong to.
- When mounting, stop the car at the finished floor level/estimated finished floor level and mount the photo eye on the rail. Align the reflective tape floor level to the photo eyes to the stopping position of the tape.
- **Note:** The arm of the photo eye bracket may need to be repositioned if it needs to be mounted where a fishplate/bracket is.

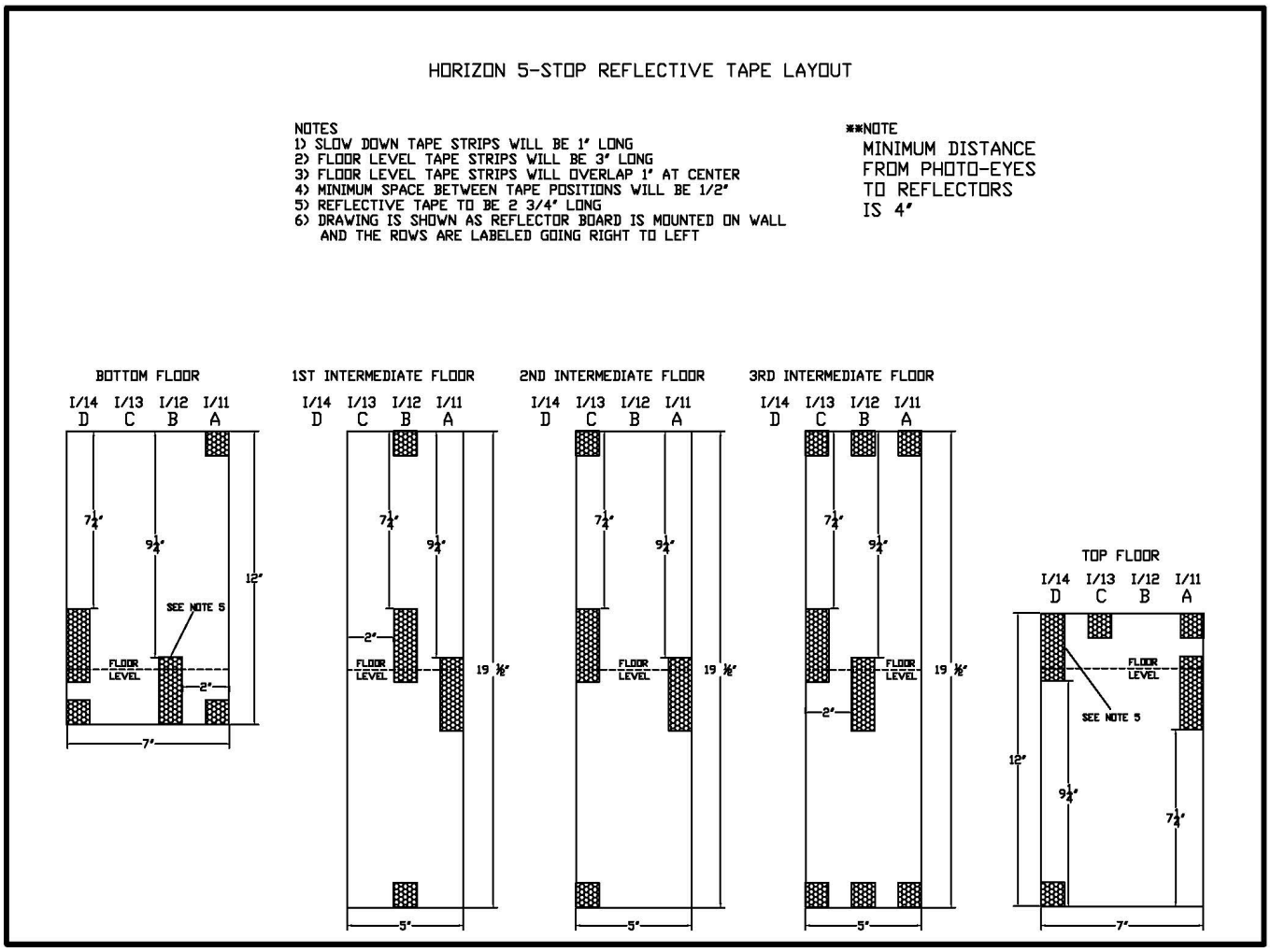

- There is a cam on bracket that will engage the final limit switch in cases of over/under travel. The cam should be 1" above final limit switch.
- The photo eye card has a break away flag for jobs with minimum overhead. Remove the break away piece on all jobs with 3-5 inches of run by.

Encoder Brackets:

- On a Touchscreen COP job, mount the Encoder brackets once you have a running platform.
- Install the lower Overtravel CAM; the top of the CAM should be 1 inch below the overtravel switch roller when the platform is at the bottom floor level.
- Install the Lower Encoder Belt Bracket 36 inches from the pit floor to the bottom of the bracket. If there is a fishplate or rail bracket interfering at 36 inches, move the lower encoder belt bracket up just above the plate or bracket. (Refer to Fig. 41a in source).
- Install the Top Overtravel CAM; the bottom of the CAM should be 1 inch above the overtravel switch roller when the platform is at the top floor level. (Refer to Fig. 41b in source).

Encoder Belt:

- Loop the Encoder Belt through the Belt Bracket hole. Make sure the belt teeth are facing to the right.
- **Note:** Make sure the Encoder Belts Teeth are face to face, so they fit in each other, then install the two zip ties. The length of the tail should be 2 ½ inches – 3 inches long.
- Make sure the belt does not get twisted, and teeth stay to the right.
- Atta g to the lower encoder belt bracket.

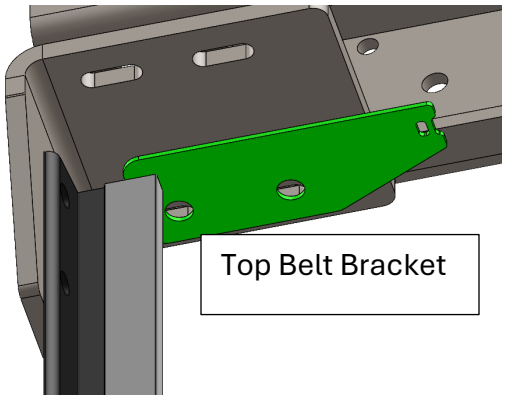

Top Belt Bracket

Bottom Belt Bracket

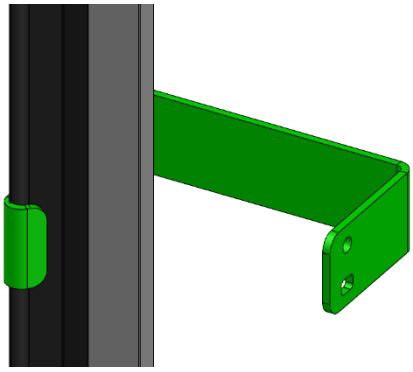

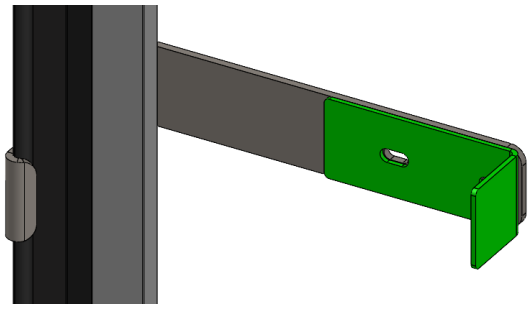

Final Limit Bracket

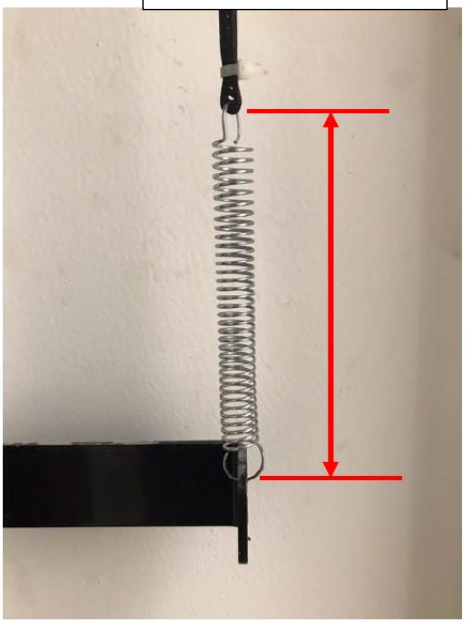

The Spring extension is 5” before wrapping around the encoder wheels

- Attach the encoder belt to the spring until the spring is extended 5 inches, then fasten the belt loop with zip ties. Cut the tail so that the length is 2 ½ inches – 3 inches long.
- Route the encoder belt through the encoder toothed wheel and idler pully.
- Make sure the encoder belts teeth engage the toothed wheel on the encoder and make sure the encoder belt is not twisted or knotted.

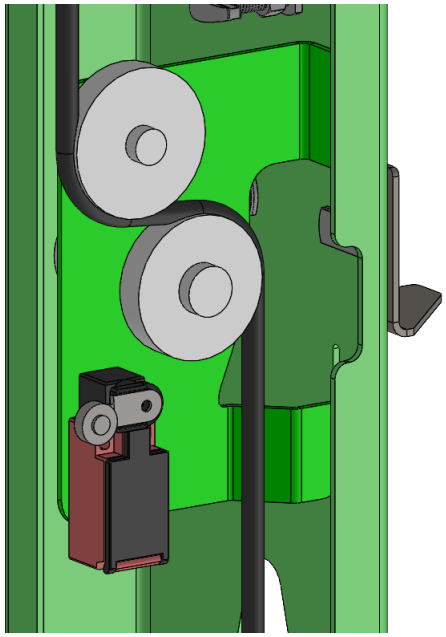

Travel Cable Installation

- Two Kellem grips are required for every job: one on the cartop and one at the top of the hoistway.
- If the travel cable is being run up from a remote machine room, the minimum height the Kellem grip is mounted is 4 feet above half the height of the hoistway.

Note: The Kellem Grip used in the shaft is to be mounted with a 1/2" lag or 1/2" concrete anchor; do not use a one-hole strap. The proper anchor securely attaches the Kellem Grip and supports the weight of the traveling cable and controls the loop if needed. One-hole straps are to be used to strap the traveling cable to the wall going back to the controller/machine room.

- **Note:** Ensure the Kellem grip is bearing the load of the travel cable, not a strap.
- The travel cable should be mounted with a minimum 30 inches space between the Kellem Grip hanging from hoistway wall and of the Kellum Grip on the car.
- On jobs where the machine room is in the attic, mount the Kellem Grip in the overhead of the shaft, preferably upon entry, not the mid-point of the shaft and not in the attic.
- Confirm when installing the car top Kellem Grip that the travel cable loop will not bottom out on the pit floor when the car lands on the pit floor. When the car is sitting on the pit floor, the loop should be 1-2 inches off the pit floor.

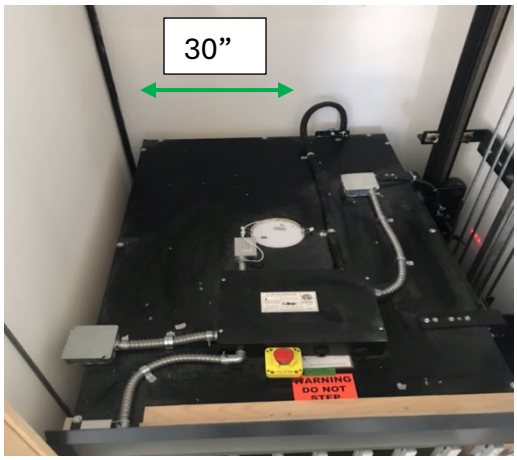

- **Note:** Travel Cable calculation to find correct loop: Pit floor to the bottom of the sling divided by 2 plus 2 inches.
- The traveling cable, floor wires, or any other piping/wiring shall never be run through the access panel.

Wiring

- All wires are to be run straight, neat, and secured to the walls. Never cross cables.
- Never run wires across the top of a door jam or across a wall where a landing door is installed. If needed, run the wire(s) up and above the top floor door and back down, or down and below the bottom floor threshold and then back up, or along the backside of the shaft to hall stations and door lock assemblies.





- **Note:** When working out of your home market, make sure you know the electrical code for home elevators. For example, all hoistway wires in NJ need to be run in PVC/EMT pipe.
- Flex runs are to be adequately secured to the shaft walls, car top, etc. All runs that exceed 12 inches are required to be properly strapped. Use the proper size strap for the size flex being installed.
- Use proper fittings for the application being used. Do not use Romex fitting for flex runs; Romex fittings are for jacketed cables only. Do not use flex or Romex fittings for EMT.
- Adequately staple or wire tie the flat wire to the shaft walls. If you are in doubt, add additional fastening points.
- Install the cover into all 4x4 boxes, junction boxes, etc.
- Always install a fitting on the end of all flex runs where the flex doesn't connect to an enclosure.
- Do not splice wires inside the shaft or anywhere without using a 4x4 box. The junction box is required to make the proper connection, and it also indicates a connection point. Make sure that all fittings are securely tight to the junction box, switch, etc.



Cab Installation

Installing The Cab Walls:

- Prior to installing the walls, inspect the cab corner bracket hooks to make sure they are straight and level. Tap hooks upward with a hammer for easier installation.



- First, set the back wall in place. Run the car up and insert the 1-3/4-inch x 1/4-inch cab bolt through the bottom of the platform and into the bottom of the panel and hand tighten. After installing the wall, ensure that the panel will not fall forward.
  - **Note:** Use caution when installing panels; have a plan on how you will fit the panel into the space.



- Next, bring one of the side walls (preferably the rail wall first if a side mount rail system) and then align the hooks to the receiver and push the side wall into the receiver.
  - **Note:** If the job has a straight pass-through cab, the two walls will be installed independently, only being fastened to the platform and cartop. If the job has an adjacent pass-through cab, the two walls will connect like an inline cab, then there will be a post that will be installed independently, only fastened to the cartop and platform.When all the hooks are in, pull down on the top of the panel to ensure the top edges of the panel are lined up properly. Confirm that the top of the side wall is either flush with the top of the back wall or below. Sometimes a light “tapping” of the side wall panels is required to “set the hooks”. Use a block of wood on the top of the panel as a striking point and hit the outer edge of the panel versus the inside edge.



- When the setting of the side panel is complete, repeat the process for the remaining sidewall.
- After the two side panels are installed, you may run the car up and insert the rest of the bolts. When tightening, make sure the cab panels flush with the platform and line up with the pencil marks. Use a wrench or the low torque setting on the impact to fasten the bolts, as they can easily pull the rivets out of the panels if torqued too much.

- Double check the platform is level, the weight of cab can alter the platform.

Installing The COP (Car Operator Panel):



- Prep the COP by verifying that all wires are plugged in correctly and secured.
- Install the end caps and confirm that they are tight and fit seamlessly with the main housing.
- Secure the flat washer and mount bracket to the small hole on strike wall with one of the provided shorter screws. Flat washer is between mounting bracket and wall.
- Tape up the end of the ribbon cable and feed it up the EMT pipe. This can also be fed down if disconnected from the COP.



- After the wire is fed, double-check all connections, hang the COP on the bushing, and level the COP. Do NOT use a level for this. Plumb the COP by measuring off the trim, corner, or gate strike in the cab.
- Install the bottom end cab cover with a screwdriver and correct security bit, using a cloth to avoid rubbing and damaging the cab wall.
- **Note:** If the job has a touchscreen COP, the COP will be done after the Touchscreen has been wired.

Installation of the Gate and Cartop

- Place the bottom of the gate on the platform threshold.
- Remove the top gate track from the cartop and slide it onto the gate's top roller.
- **Note:** If this is a scissor gate, remove the two screws from the rear post and set them aside prior to bringing the gate into the cab. If this is an accordion gate, verify that all hardware, the receiver, and the magnet are all present after taking the gate out of the box.
- **Note:** Make sure the gate(s) are leaning into a secure position to prevent them from falling over.
- With caution, place the cartop on top of the cab and secure it to the rest of the cab with the hardware provided.
- Slide the gate track into the gate switch puck if the gate switch has been installed already.
- **Note:** When securing the cab panels to the platform, make sure that all the walls are flush with the end of the cartop, and the gate switch puck is all the way against the strike.

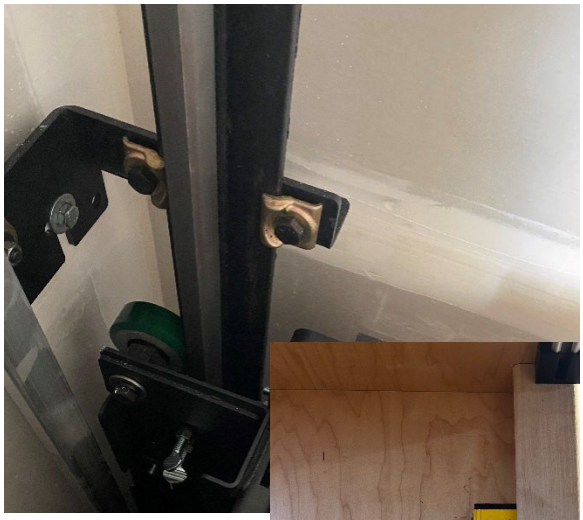



- Install the cab steady brackets on the sling, hand tighten, making sure they are sitting flat on the cartop.
- Let the cab sit naturally without pushing or pulling, fasten one hex screw to each side of cab stabilizing bracket. After 2 screws are in top of bracket then tighten back bolts to sling with wrench.
- After tightening the cab steady brackets, level the cab, placing the level on every wall while leveling. It is very important for the gate's operation that the strike is leveled perfectly. Remove the screws holding cab steadier bracket to cart top if needed to level cab walls.
- Secure the cab steady brackets to the cartop with a minimum of 4 hex head cartop screws on each bracket. When tightening these, use low torque to avoid stripping out the wood.
- **Note:** Excessive force is not needed to level your cab; this can cause binding in the cab and/or sling and bring up several issues in the ride quality. If it is difficult to level the cab, double check that the platform is level.
- Once the cartop is secured and the cab has been leveled, secure the gate track to the top of the cab. Start by using the holes on each end that have already been used when the track was previously mounted to the cartop. Then fill the rest of the mounting holes with the gate track screws provided.
- **Warning:** All gates are intended to operate with a gate closure contact/switch that is connected to the elevator control system. Failure to install a code compliant gate closure switch could result in injury or death.

Scissor Gate Installation:

- **Note:** After the top gate track is fastened to the cartop, verify that the bottom of the gate is not dragging in the threshold.
- Cut the plastic wrap off the gate and use the provided screws that were removed earlier to mount the back post of the gate to the pre-drilled holes in the top gate track and the bottom threshold.

- Verify the gate moves smoothly and easily through the track and it enters the gate switch with ease.


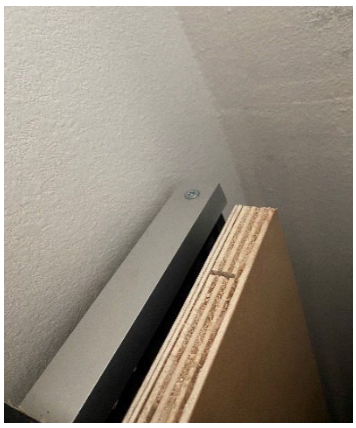


Accordion Gate Installation:

- **Note:** After the top gate track is fastened to the cartop, verify that the bottom of the gate is not dragging in the threshold.
- Drill 4-5 holes with a 1/8-inch drill bit evenly spaced out on the last panel on the accordion gate. These holes will be used to mount the gate to the gate stack pocket.



- Push the gate to where it has fully stacked in the pocket and hold the back mounting panel in place. Fasten one screw down and verify that the gate stacks properly. If it does not stack properly, take out the screw and try again. Once the gate is stacking properly, insert the rest of the screws.
- **Note:** When you fully open the gate, it should fully stack, be level, and not spring back. If the gate springs back, it is binding, and the mounting panel may need to be adjusted.
- Take the receiver and line it up with the gate switch and gate channel in the threshold. Ensure the receiver is elevated and not resting on the threshold. Pre-drill these holes to mount the receiver and use the provided hardware to mount it on the gate strike. Make sure the lead gate post fully enters the receiver evenly and smoothly.





- Mount the provided magnet onto the receiver. Align properly by placing the magnet on the gate and fully closing the gate; the adhesive should stick the magnet to the receiver.

Double-check the alignment and fasten the magnet to the receiver, which will also need to be pre-drilled.

- **Note:** If the job has a power gate operator, the receiver magnet is not needed.
- **Note:** With both styles of gates, you must verify that the gate handle is accessible from the doorway when the gate is fully opened and closed. If one of these is behind either return, verify your cab and hoistway measurements, and contact your manager or production.

Millennium Gate Installation:

- **Installation of Top Track:**
  - The upper track is secured to the top of the carriage with 3 x Cartop screws with pre-drilled holes along the heel of the lowest track section.
  - The front edge of the lowest track element should be proud of the front edge of the ceiling by roughly 1/8 inch to ensure that panel #1 does not rub.
  - The side of the upper track can be aligned with the daylight line for side-to-side positioning.
  - Once alignment along the front edge and side are achieved and screws are in place, the support brackets to fix the top edge of the upper track can be added. An image of the support brackets is shown.







  - The support bracket (Z-Bracket) is secured to the top of the upper track with #6 self-tapping screws supplied by Good Gate. There are three brackets and several sets of pre-drilled pilot holes on the top of the upper track. Hardware for securing it into the cab ceiling is not supplied.
  - Which end the 3rd bracket is mounted will depend on the position needed for your gate switch.

- **Installation of the Lower Track/Sill:**
  - Once the upper track is secure.
  - Insert panel #1 into the appropriate channel of the upper track using the groove, machined roughly at the midpoint of the channel.

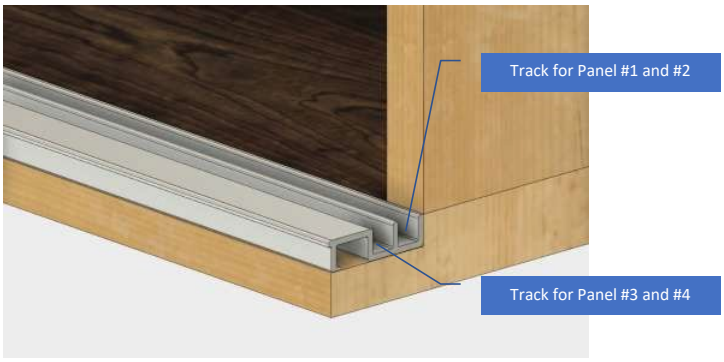

  - Put the sill underneath panel #1 with the panel inserted in the appropriate groove. (Note that panel #1 and #2 share a groove, and panel #3 and #4 share the other).
  - Push panel #1 to the back of the channel such that the lower aluminum cross piece is touching the surface of the track that is furthest from the landing side.
  - Using a level, check to see that the panel is vertically plumbed. Shift the lower track until the panel is vertically plumbed.
  - Mark where the lower track/sill should be located.
  - Adjust the position of the track so the lower track/sill travel matches the travel of the upper track, and the end sits in the pocket area.
  - Slide the panel out of the way of any screw holes for the lower track. Secure the lower track/sill with #10 taper head wood screws.
  - Ensure that the screws do not touch the bottom of the panel; if they do, you may need to torque the screws tighter or shim the upper track higher due to the overall dimensions of your car.
  - Test to make sure that the panel is plumbed in several places along the full travel to ensure good alignment for the lower track.
- **Installation of Panels:**
  - Each track has a machined slot for inserting a single wheel of the appropriate panel into the track. The process is as follows:
    - Place the lower edge of the panel into the appropriate groove of the lower track/sill.
    - Move the panel into position so that the wheel on the left side of the panel (looking from the landing side) is inserted first by simply pushing it into the slot.
    - Move the panel to the left and then insert the other wheel.
    - Move the panel back to the right so that the full panel is now on the other side of the groove before proceeding with the next panel.
  - Panels should be inserted in the order of #1, # 2, # 3, #4.

- **Installation of Mid-Panel Slot Catches:**

- The panels are equipped with slots to secure each gate panel to the subsequent one. For proper sliding action and deflection requirements, slot screws must be installed.
- Insert #10 pan head screws at mid-height of panels from the landing side through the slots. The screws are in the small parts bag sent with your gate.





- There are 6 screws for each gate, and they have tamper-proof heads. An appropriate screw bit is shipped with each gate for installation of the screws. The screws are compatible with most tamper proof #10 screw drivers.
- The screws should have a light pink film on them, which is a thread locker compound intended to harden once installed. If removed shortly after, new thread lock compound should be applied.
- Tighten the screws so the shoulder is snug against the upright of the next gate panel. This should position the screws such that the head does not touch the panel in which it slides, and it also does not contact any other panel as it opens and closes, avoiding binding.
- **Warning:** Failure to insert these screws or installing screws that do not have a thread locking compound on them could cause serious injury or death.

- **Checking for Plumb and Smooth Operation:**
  - Once panels are inserted and connected, check operation for any binding, scraping, or other problems.
  - Panels should also be checked for plumbness with a level at several positions.
  - The most common issue with smooth operation is a tilted upper track, causing bearings to rub on the upper part instead of rolling on the bottom surface. This can be remedied by adjusting the position of the Support bracket.
- **Setting Travel Stops:**
  - The gate upper track assembly comes with three flange nut/set screws installed in the top track to stop panels from moving beyond points that would compromise safety.
  - The position for the third flange nut/set screw will vary depending on the gate opening direction but is easy to install and adjust with a standard hex key.

- On the bottom track, one set screw prevents the gate from coming out of the end of the track. The second set screw on the bottom track must be adjusted to stop the trailing edge of panel 1 from traveling past the interior wall of the car on the pocket side. If not set properly, panel 1 can travel too far in the closed direction, creating a gap.

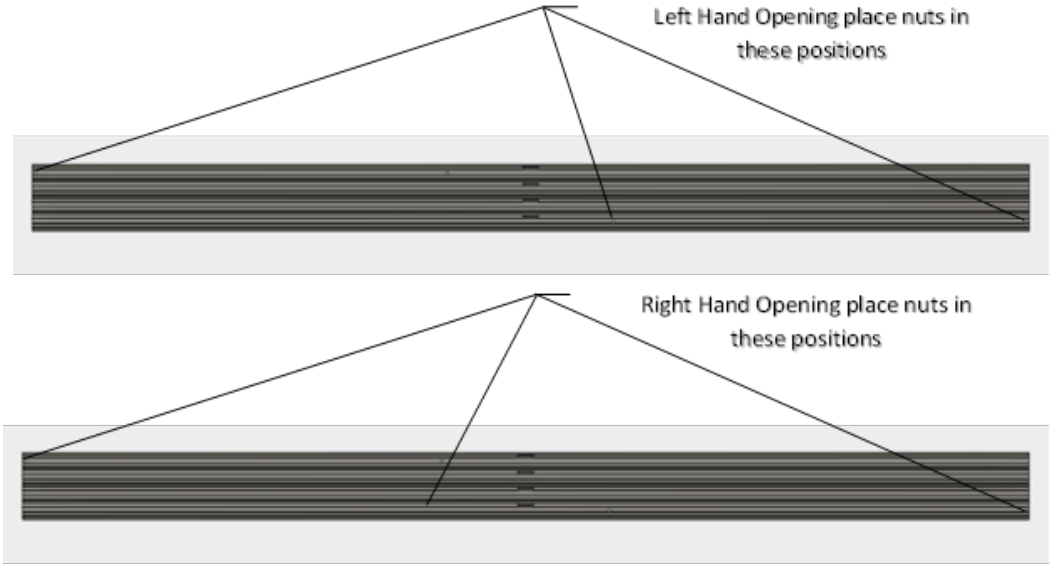

- **WARNING:** Failure to properly set the mechanical travel stops could result in serious injury or death.

- **Closure Magnet, Contact/Switch, and Brackets:**
  - The standard contact switch supplied (in red) has screw terminals that should be connected to the elevator safety circuit.

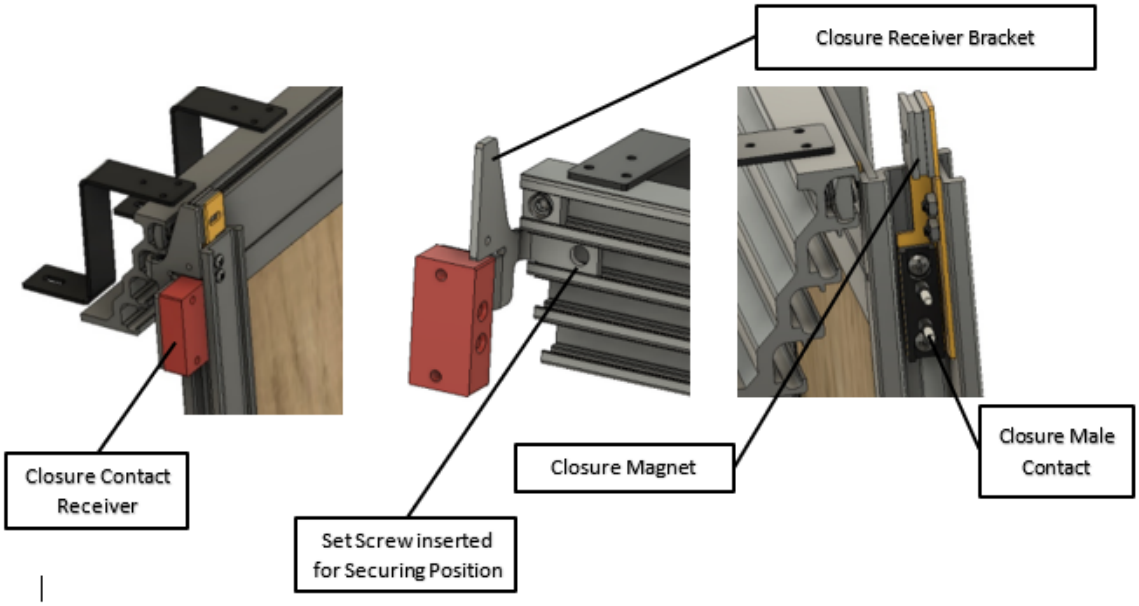

  - The closure contact receiver is attached to a bracket inserted into the track for panel #3 on the upper track and secured with set screws. Exact position

can be adjusted to ensure the leading edge of the gate touches the "slam post" of the carriage while having positive engagement with the magnet and contact to indicate closure.
    - A magnet and male contact are included in a second bracket and should be installed on the leading edge of the gate panel at the top. The magnet can be adjusted for the desired makeup of the contact and magnetic retention.
    - The kit is "handed," and replacement parts should be ordered accordingly. The kit for gates with auto-operators removes the magnet retainer as it is not required.

- **Testing Checklist:**
    - Check that the height of carriage is appropriate for gate height and shim if the carriage is not square/level.
    - Check that the back of the landing door is less than 3/4 inch from inside of shaft.
    - Check that there is clearance between gate and the back of each landing door is not more than 4 inches.
    - Verify gate panels move smoothly and do not bind.
    - Verify gate panels are plumb.
    - Verify top track support brackets are in place and secured.
    - Verify Mid Slot Screws are in place and secure with thread lock compound.
    - Verify gate closure switch is in place and activates/deactivates correctly to avoid carriage movement if the gate is in the open position.
    - Verify gate pocket is blocked off and travel stops are properly set to not allow users to put hands or tools into elevator shaft space.
    - Verify all panels have clearance between the bottom edge and the lower track to avoid rubbing and unintended interference.

WRAP AROUND GATE

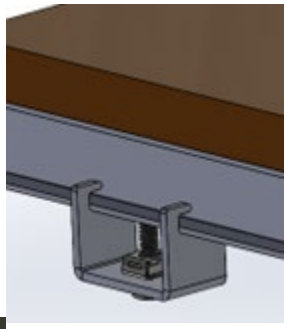

- Install the gate stop BFORE installing cartop.
- The gate stop prevents the gate from rolling off the threshold in the open position.
- Remove the cab landing portion of the threshold and top gate track.







- Slide the gate into the track and threshold. Check that all rollers are fully engaged on the track. If any resistance occurs, pull back to check roller alignment or any type of panel separation. There should be no resistance.
- Install the gate switch arm into the lead panel of the gate.
- Attach the gate switch mounting bracket into the top of cab. Adjust the gate switch to the roller on gate switch arm. The roller should have no more than 1/8” gap at entry point of gate switch.



- For Power Gate Operations, remove the roller on the gate arm.





- Install the threshold and gate track that was removed earlier.



Wiring the Cartop

Cartop Rules:

1. All wiring, except the traveling cable

and low voltage cab light wires, is required to be in flexible conduit. This includes gate switch(es), slack cable wire, photo eyes/encoder, and gate operator(s).

2. Any flex run that doesn't terminate into a box requires a proper flex fitting on the end of the flex to protect the flex and wires.
3. Alarms are to be mounted inside the car top controller box via a 3/4-inch knockout.
4. All four gate switch cover screws are to be used when installing the cover on the switch enclosure.
5. When installing the 4 x 4 box on the car top from the COP, it is required to have a 3/4-inch EMT box connector connecting the box to the conduit.
6. Make sure that all car top devices are mounted square to the ceiling.
7. Run the slack cable wire down the COP wall and through the access point in the outrigger.
8. Install the top valence/sight guard to cover the gate switch and the door opening.





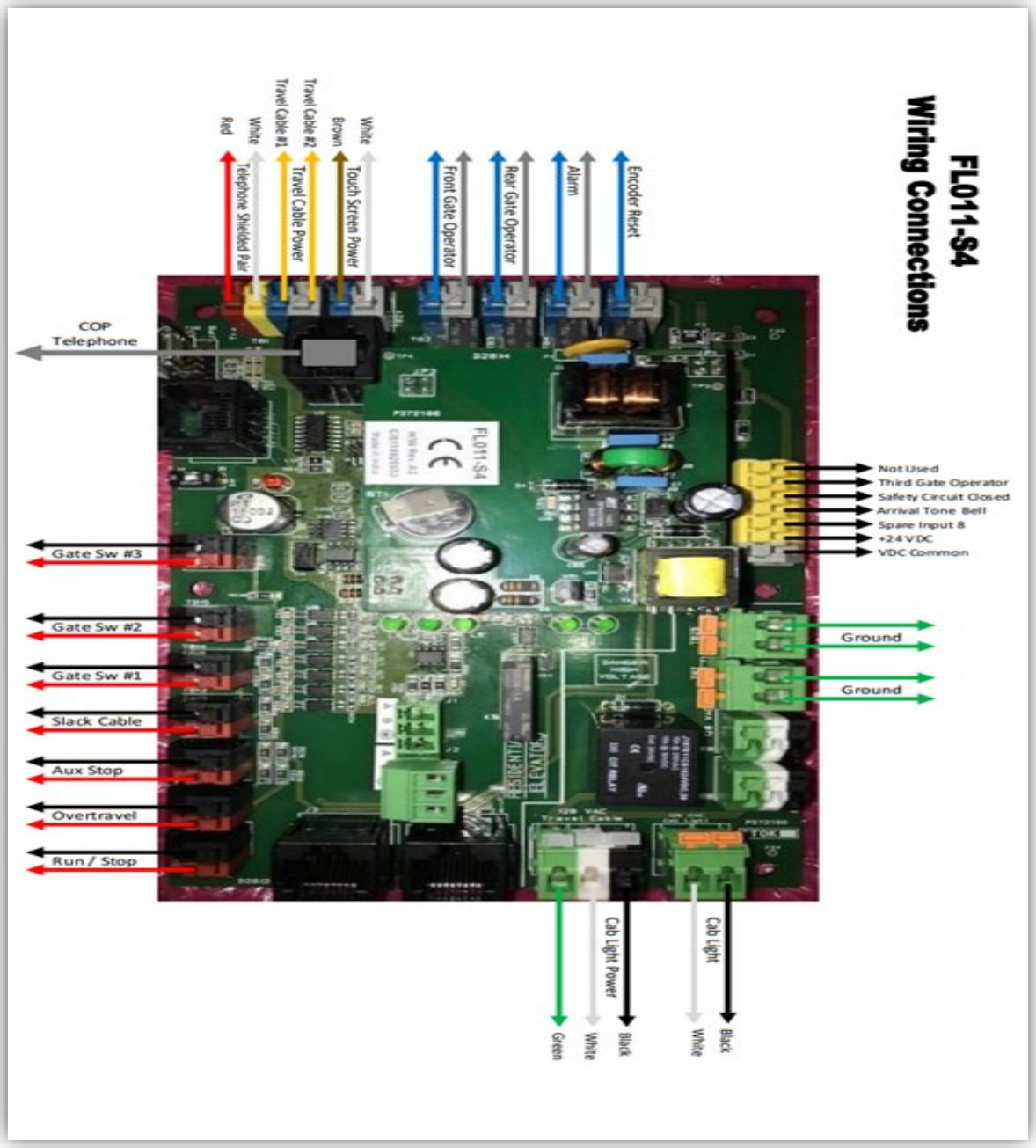

Car Top connections

Landing Indicator



- Using 4 Conductor Gray Flat Cable with RJ11 Connectors, connect the Landing Sensors to the Control / Indicator Box and the Y Connectors provided in the kit.

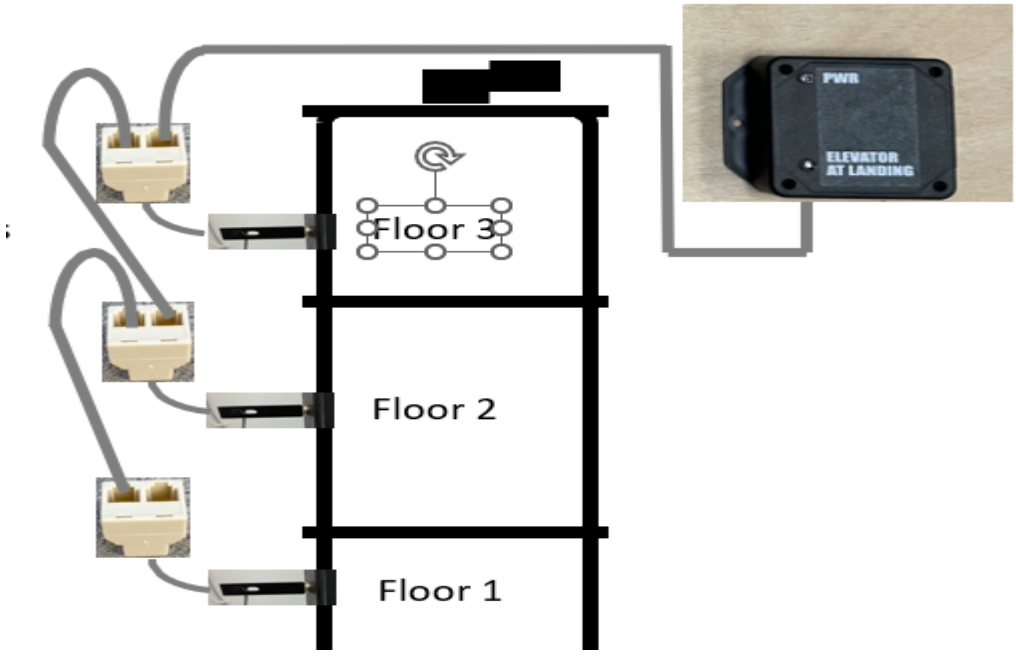

Connecting the control Unit

- The control unit must be installed in the machine room and is powered by the UPS. Plug into the SURGE ONLY side of the UPS. In case of power loss, the Control Units battery will continue to work over the required 4 hour minimum.

Floor Landing Sensors.

- Install the Sensor into the slot on the Landing Sensor bracket as shown, then attach the Floor Level Bracket to the T-Rail at each floor level with the magnet. Note: Secure the sensor cable to the wall so there isn't any load on the sensor/ sensor bracket.
- The gap between the landing sensor and the car top bracket magnet should be 1/2".

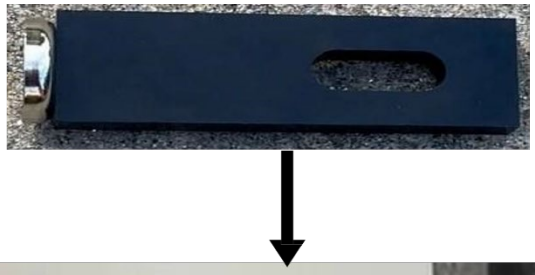





- Install the car top landing bracket on car top.



The bracket can be installed on the left or right hand by flipping over.
The last sensor wire coupling will need a jumper installed to complete the circuit.

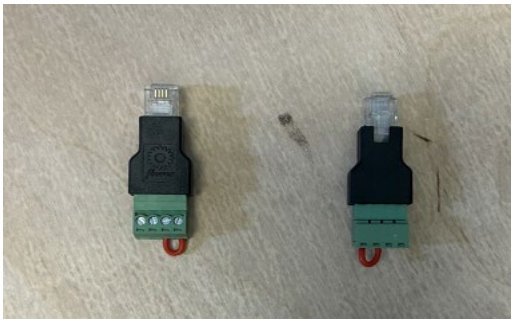

The control unit will show red once power and a jumper is installed and green when the car is at landings.



Refuge bar

- The refuge bar stores inside the sling. Lower in in from on top of car and hook onto the front side of the sling.

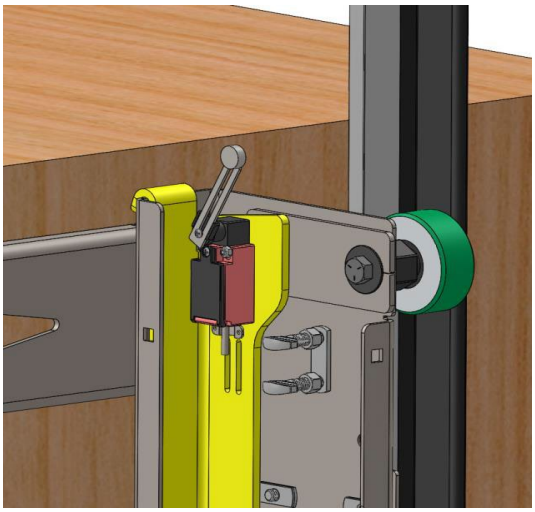

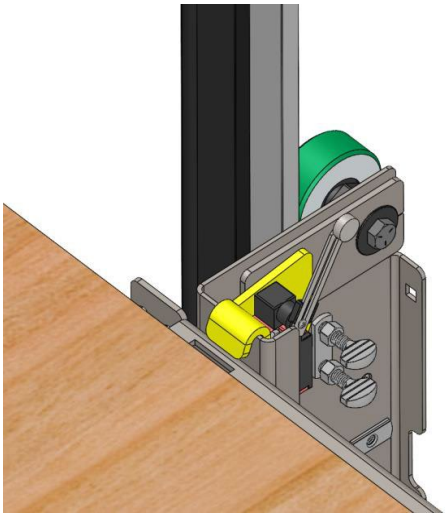

- Install on the side of sling closest to front landing door. Coil up the access wire and secure to car top. Apply flocking tape, felt tape or foam tape at the bottom to prevent rattling noise during travel.
- It is deployed by lifting it up out of stile and setting it in the slots cut in the header. Once placed in header the bottom switch is activated.

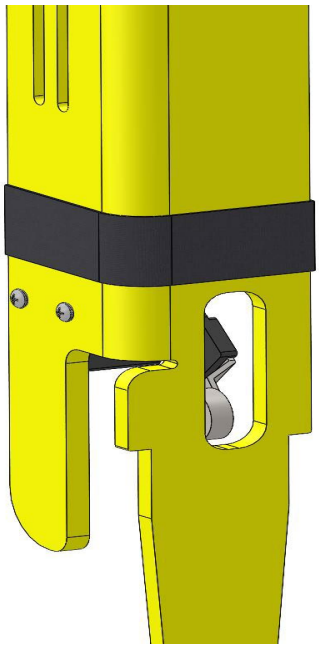

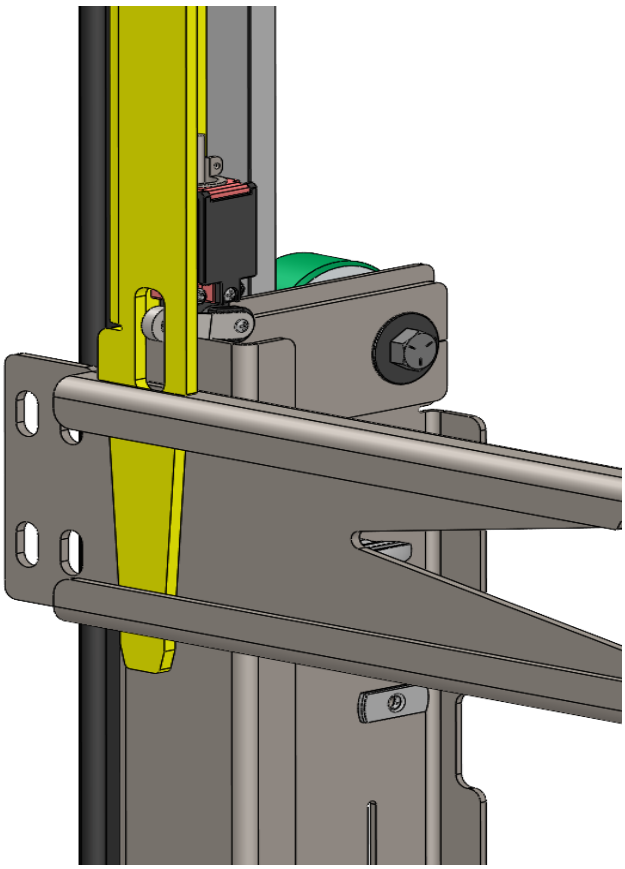

- The top limit switch will activate against the bedplate angle. Verify alignment upon installation.

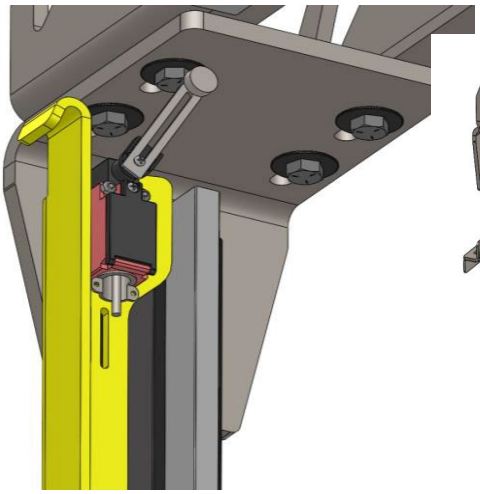

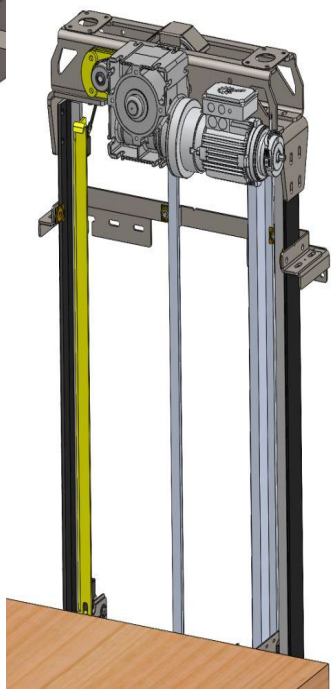

Wiring the Refuge Bar

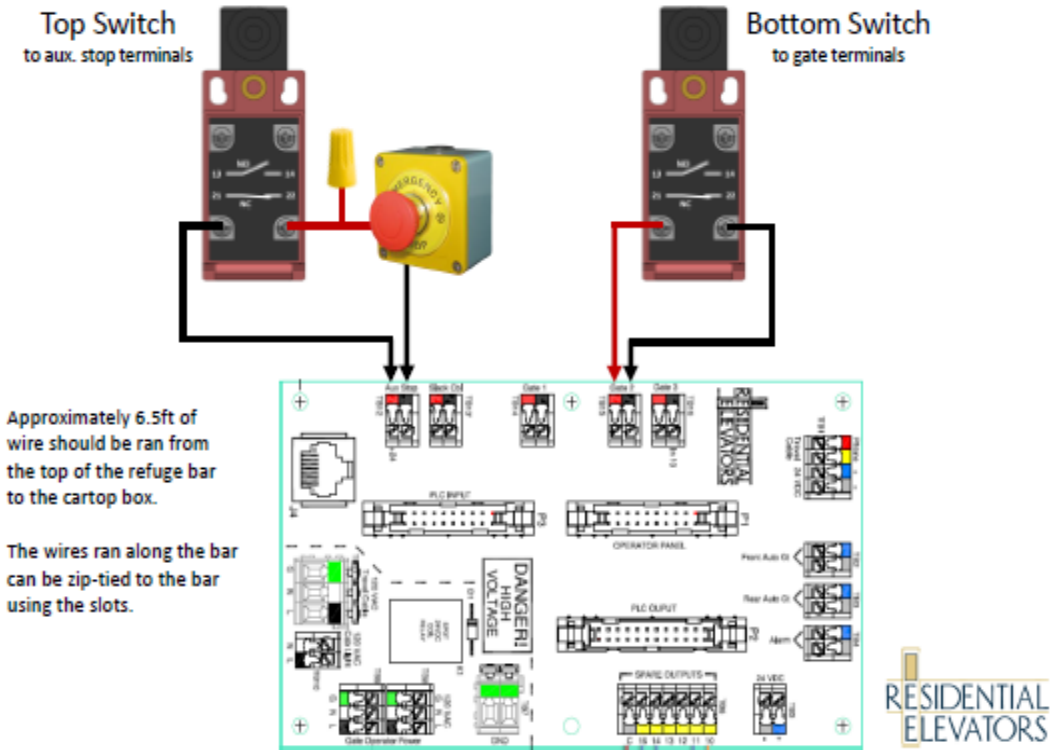

Encoder for Standard Push Button C.O.P

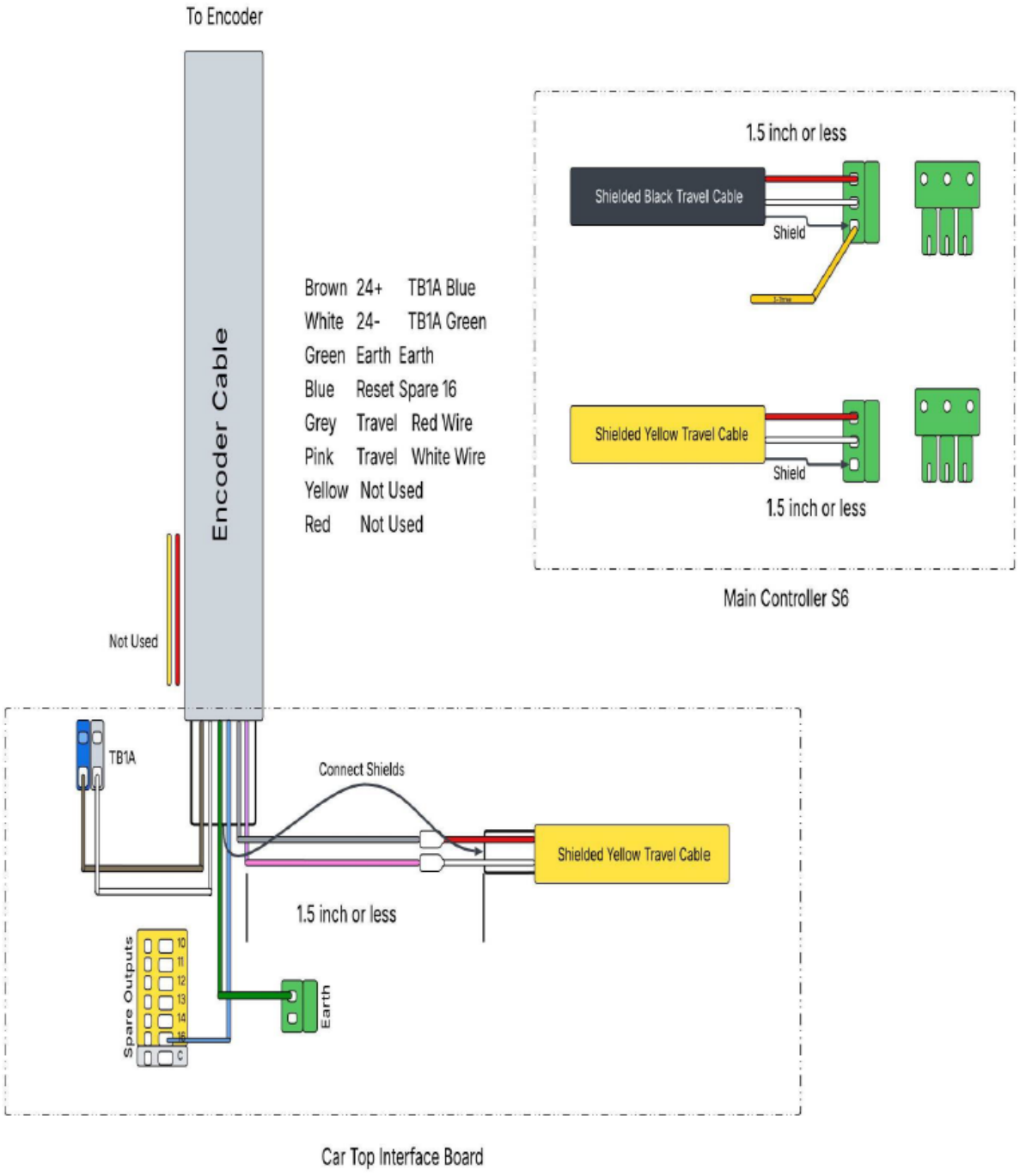

Encoder Wiring Cartop

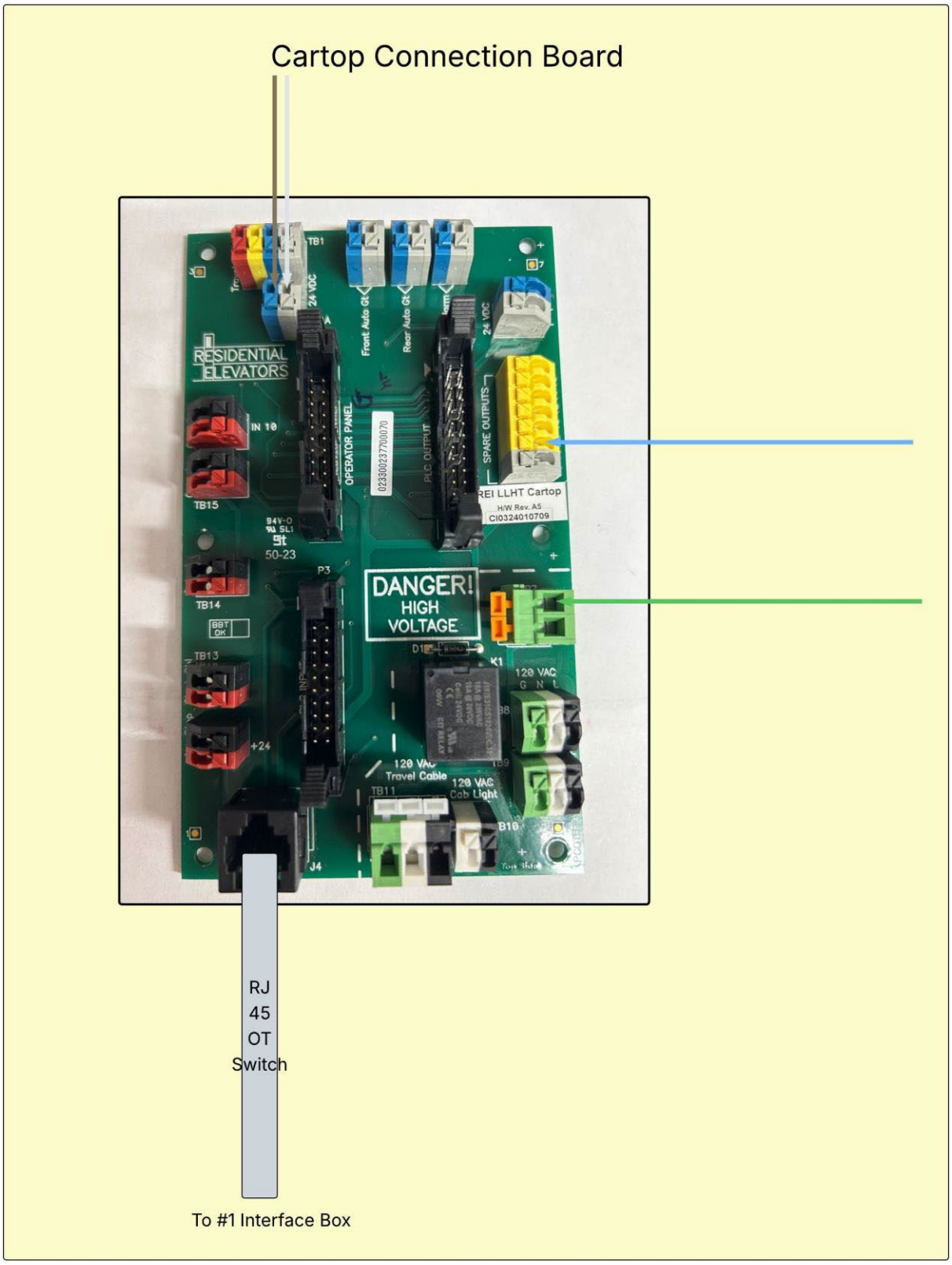

Connect with controller manager and enter all setup information that pertains to your elevator setup on the setup page. DO NOT CYCLE POWER OR CLOSE CONTROLLER MANAGER UNTIL ENCODER SETUP MODE IS DONE

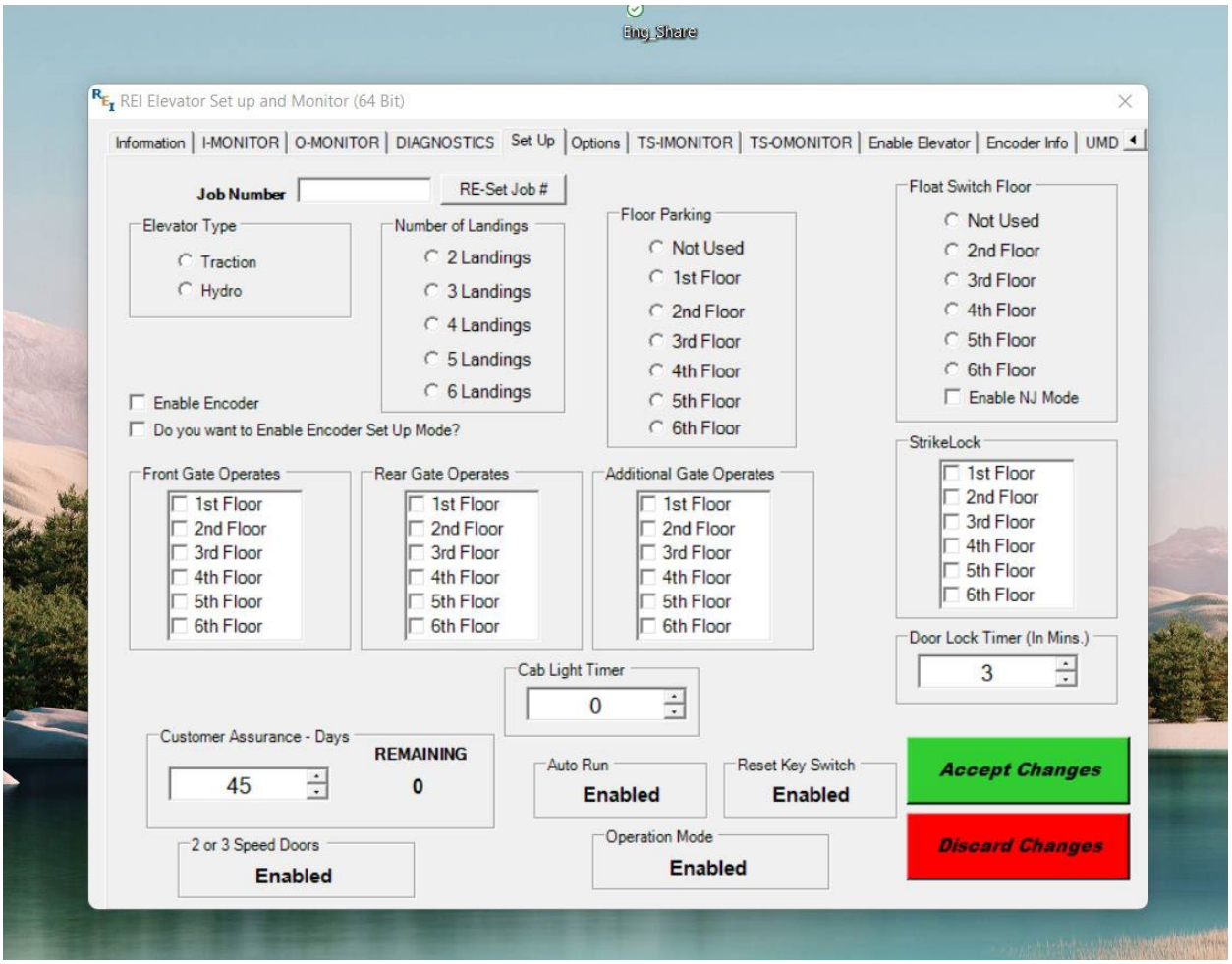

On the setup page check on the 'Enable Encoder' box and check on the 'Do you want to Enable Encoder Setup Mode' box as shown in the picture below.

DO NOT CYCLE POWER OR CLOSE CONTROLLER MANAGER UNTIL ENCODER SETUP MODE IS DONE

Jogging Instructions

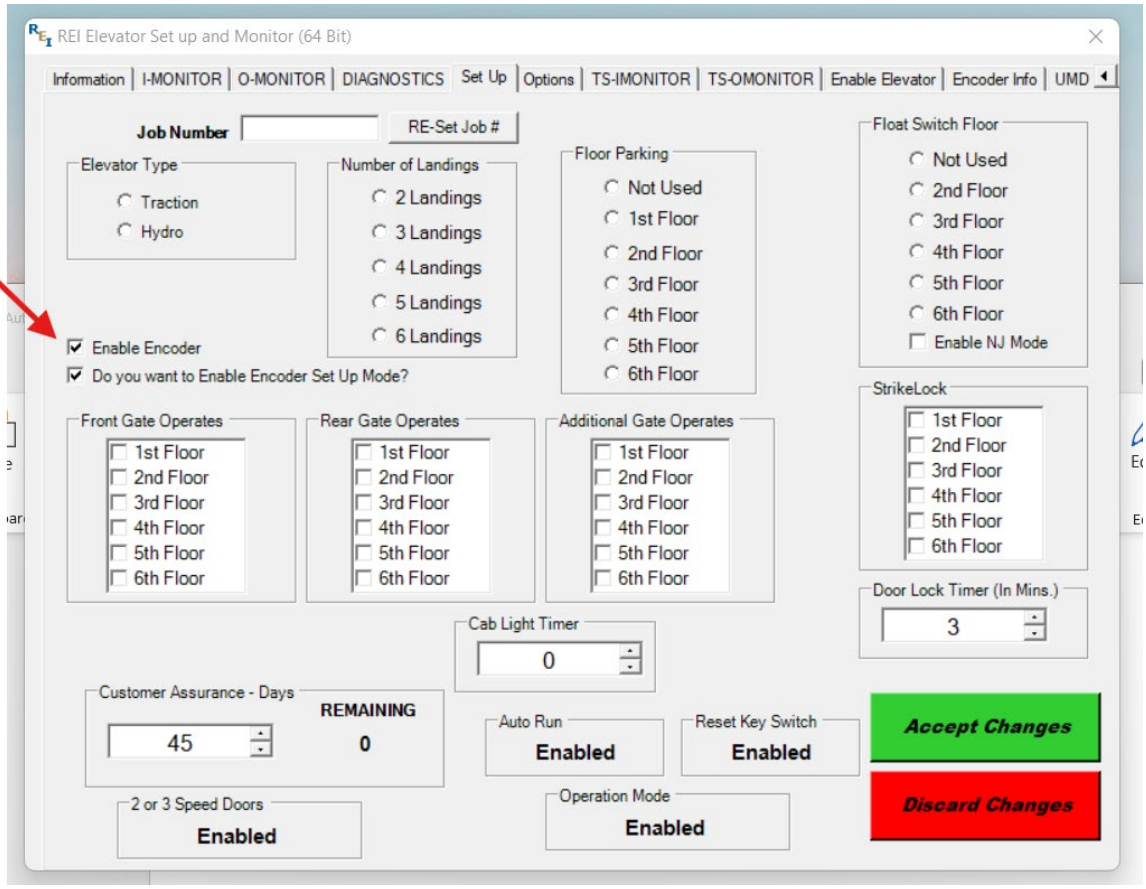

NOTE: Controller Manager, ENCODER SETUP MODE' must be enabled
WARNING: Elevator moves at high speed
Jog the Elevator up

1. **Place *Run/Stop* switch in 'RUN' position**
2. **Place *Cab Light* Switch in 'On' Position**
3. **Press *Alarm Push Button* to Jog Elevator Up**

Jog the Elevator Down

1. **Place *Run/Stop* switch in 'RUN' position**
2. **Place *Cab Light* Switch in 'Off' Position**
3. **Press *Alarm Push Button* to Jog Elevator Down**

Zero the Encoder at the Pit Floor Level
NOTE: This step MUST be done before setting any of the floor landings.
NOTE: If the Encoder has already been set to zero and you are simply adjusting the floor level setting, this step can be skipped.

1. Jog the elevator down and land the elevator on the pit floor using the procedure above.
2. Press and HOLD the 1st Floor and the 2nd Floor COP Pushbuttons
3. While holding the 1st Floor and the 2nd Floor COP Pushbuttons down move the Run/Stop Switch from the RUN Position to the STOP Position.
4. The Alarm Light should blink indicating the Encoder has been set to zero

Set 1st Floor Encoder Position

Jog the elevator to the 1st floor landing position then press and release the 1st floor COP Pushbutton (1st floor COP Pushbutton will 'Flash' confirming the floor landing position is saved).

Set 2nd Floor Encoder Position

Jog the elevator to the 2nd floor landing position then press and release the 2nd floor COP Pushbutton (2nd floor COP Pushbutton will 'Flash' confirming the floor landing position is saved).

Set 3rd Floor Encoder Position (if used)

Jog the elevator to the 3rd floor landing position then press and release the 3rd floor COP Pushbutton and (3rd floor COP Pushbutton will 'Flash' confirming the floor landing position is saved).

Set 4th Floor Encoder Position (if used)

Jog the elevator to the 4th floor landing position then press and release the 4th floor COP Pushbutton and (4th floor COP Pushbutton will 'Flash' confirming the floor landing position is saved).

Set 5th Floor Encoder Position (if used)

Jog the elevator to the 5th floor landing position then press and release the 5th floor COP Pushbutton and (5th floor COP Pushbutton will 'Flash' confirming the floor landing position is saved).

Set 6th Floor Encoder Position (if used)

Jog the elevator to the 6th floor landing position then press and release the 6th floor COP Pushbutton and the (6th floor COP Pushbutton will is 'Flash' confirming floor landing position saved).

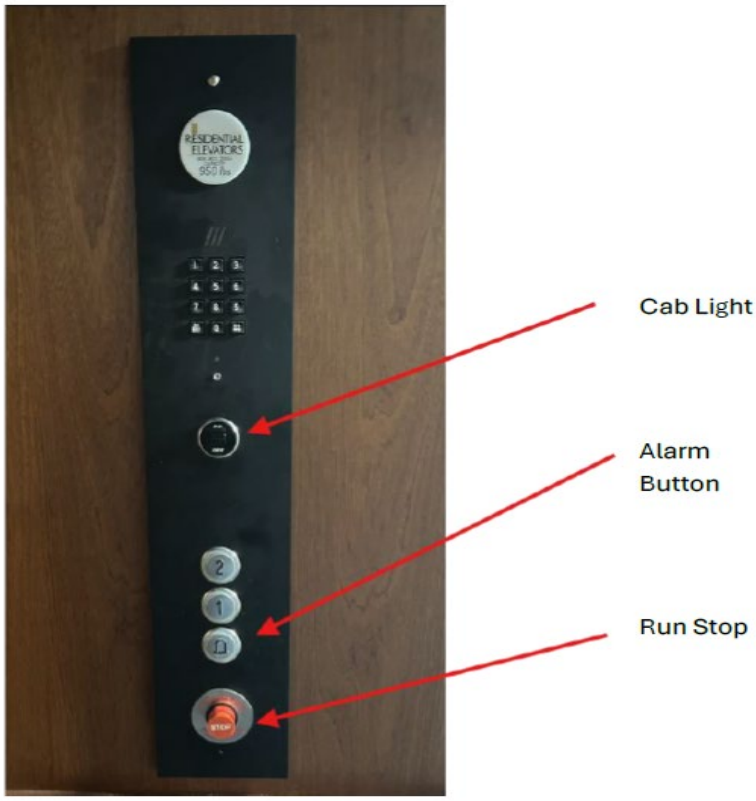

When complete uncheck the box for 'Do you want to Enable Encoder Setup Mode' as shown in the picture below.

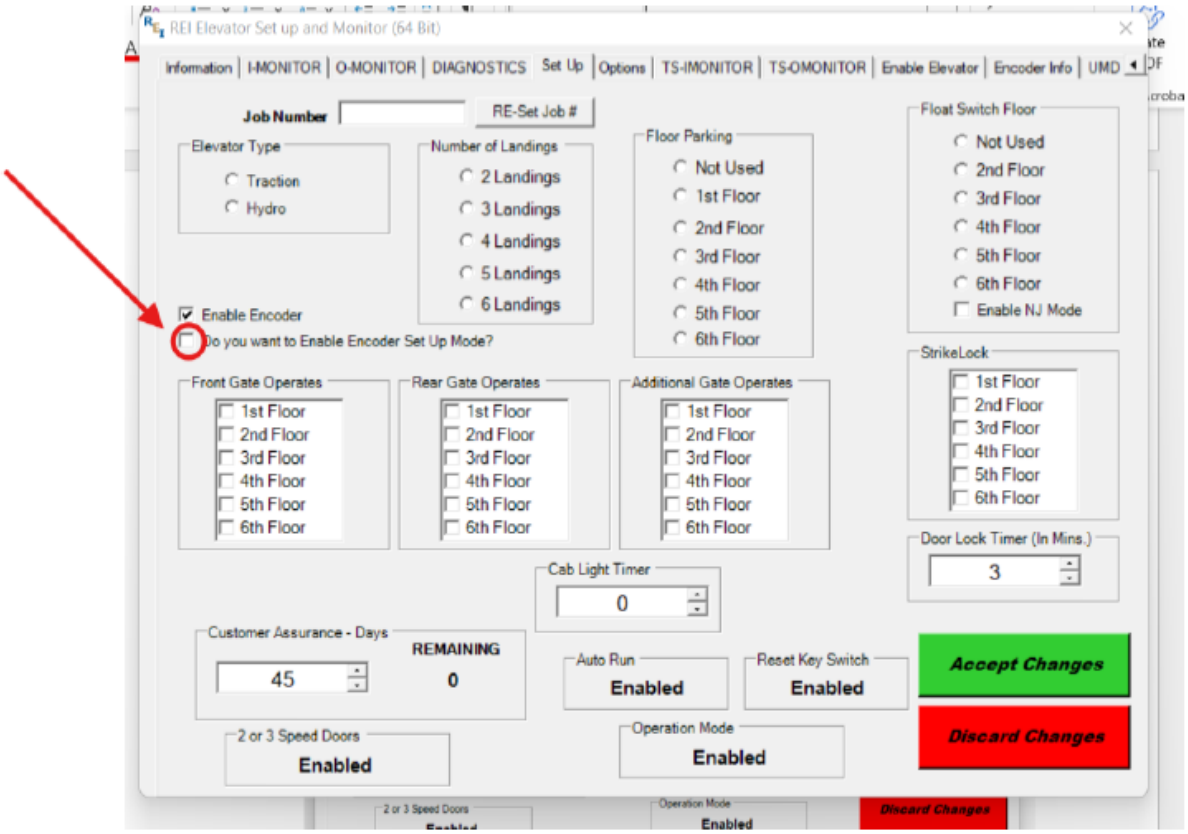

Select any features needed and Enable Edits and Close Controller Manager to enter the normal Run Mode of the elevator. Test all landings to ensure proper settings and ensure proper setup and features.



Power Gate Operator

ECI PGO:

- Place the Power Gate Operator (PGO) on the car top and make sure it is the correct size.
- The ECI PGO can be left or right-handed. If your Operator is not set up for the side you need, you will need to move the gate switch to the other side and flip the magnet assembly around.
- **Note:** The magnet must be pulling the gate closed, not pushing. This way, in the event of an emergency, someone can break the gate arm free from the magnet to open the gateFlush the PGO up with the end of the cartop and begin to run the wires and flex from the cartop controller to your PGO. This can be done with just an 8-conductor round wire.
- After wiring, turn on the cab light power circuit, as this powers the PGO.
- Select the orientation and let the PGO learn itself. Now put the PGO into manual mode and begin to set the arm on the gate.
- **Note:** Make sure the L brackets are installed properly to protect the gears in the PGO from being struck.
- When setting the arm, ensure that the arm's cam is high enough to activate the gate switch.
- After the gate arm is attached, screw down the PGO to the cartop and restart the learning cycle. You may have to move the PGO left or right and repeat this step to ensure it is fully open and closed.
- Adjust the gate switch position to make sure when the gate strikes the receiver, the gate switch is activated.
- After this is set, set all parameters to the values provided by the REI ECI PGO installation document.
- Set it to automatic before closing the PGO.

Parameter	Setting
Close Speed	100
CI slow speed	20
CI braking pos	250
Close torque	170
CI holding force	0
Open speed	100
Op slow speed	20
Op braking pos	250
Open torque	170
Op holding force	0
Acceleration	100
Deceleration	250
Nudge speed	30
Timeout	15
Reopen triggers	0
Auto Close	1

Wiring the ECI PGO:

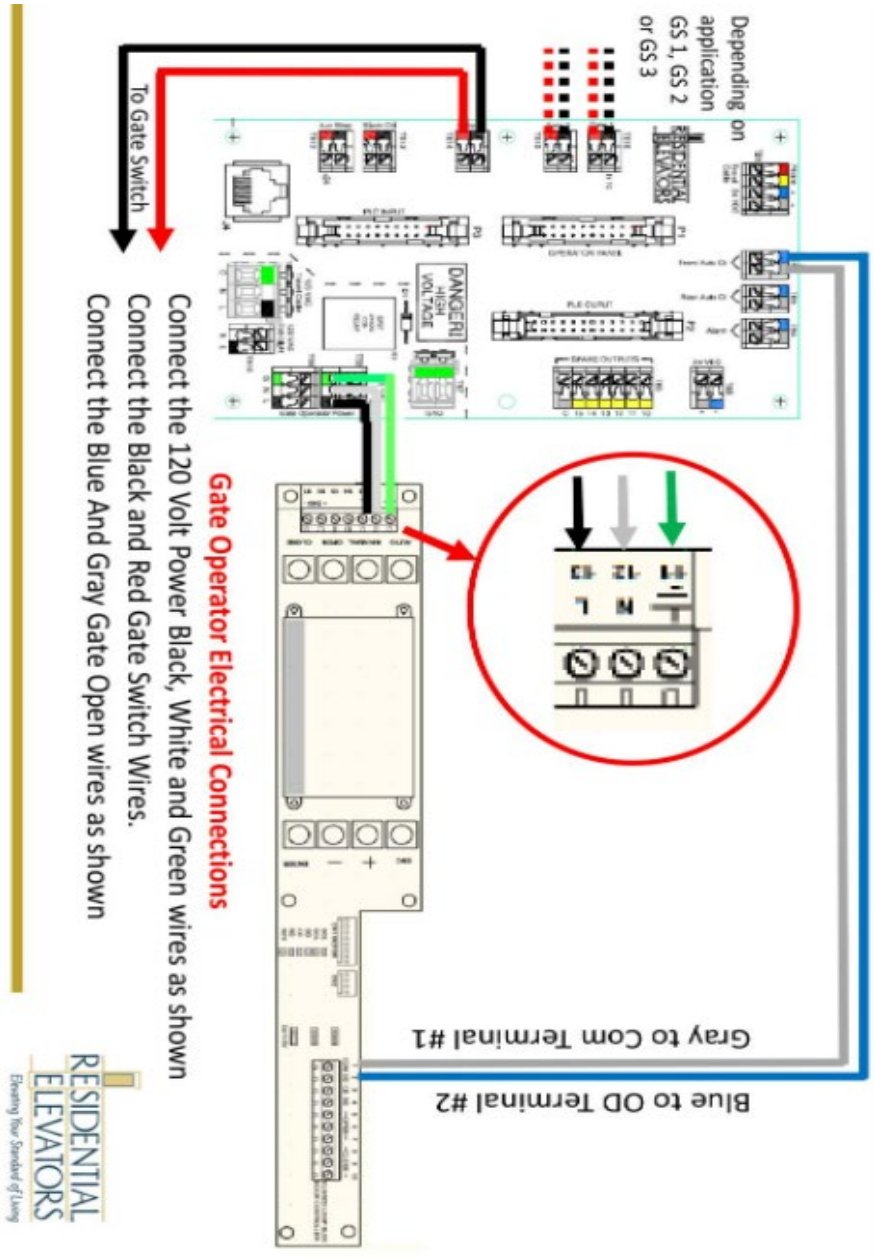

Car Bottom

- Place the car where the bottom of the car frame is accessible from the pit.
- Install the safety activation arm using the hardware provided. Make sure the proper shoulder bolt and nut are used for the linkage to safety.
- **Note:** Ensure that the shackle rods are no more than ¼ inch away from the activation arm, and they should not be touching the activation arm.
- Install a Romex connector onto the slack cable switch and install the slack cable switch to the sling. Ensure that the proper mounting holes are being used and that the placement of the slack cable switch is where it will be activated by the activation arm.
- Install the slack cable wire from the car top, feed the wire through the ¾-inch hole in the sling extension and staple to the car bottom. Make sure to leave a service loop. Use the red and black wire and install N/C terminals in the switch.
- Install the pit-stop switch, and the float switch (if applicable) can be installed. Verify that these items will not encounter the car and will be at least ½ inch away from it. The Pit stop switch should be 18 inches above the landing. These switches should not encounter the travel cable.
- Install the toe guard. Place the toe guard on the threshold so that the top of it is ¼ inch away from the top of the threshold and is centered and covering the doorway.
- **Note:** When installing the toe guard, start from one end and then install the rest of the screws into the end of each of the next mounting holes. This will prevent bubbling by stretching the toe guard out.



Touchscreen COP

- When installing the Touchscreen Car Operator Panel (COP), five wires will be needed:
    1. Encoder Cable (Provided with job)
    2. Round 8 Conductor Cable
    3. Round 4 Conductor Cable
    4. Flat 4 Conductor Cable (Provided with job)
- The wires need to be fed down from the top of the car and cut to the necessary length, which should be just longer than the bottom of the COP enclosure.
- **Note:** Ensure that the factory end of the cable can reach the encoder before cutting.

- **Note:** The USB cable provided should not be cut, as both factory sides are necessary for use.
- When wiring any communication cables, it is imperative that the communication wires follow the most up-to-date protocol. See current wiring protocols below:
    - The Round 4 Conductor Wire shall not have its shielding cut back more than 1 ½ inches. The red and white wires must be twisted; this applies to both the cartop and COP side.

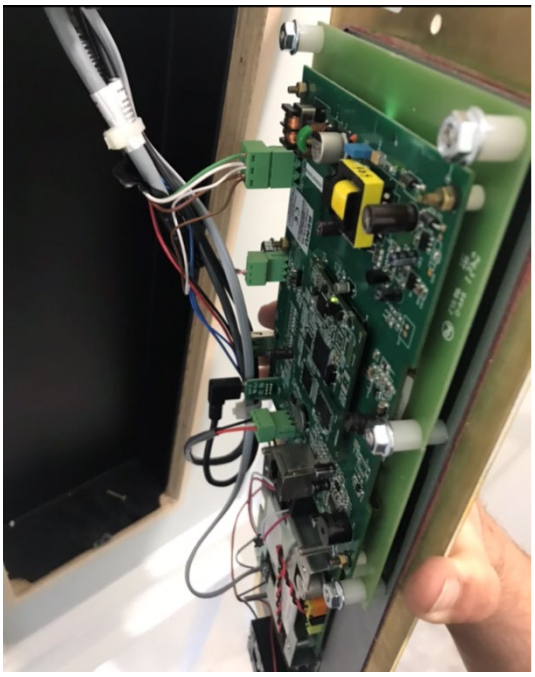

- The pink and grey wires coming from the encoder shall not be exposed outside of the shielding more than 1 ½ inches and must be twisted.



Touchscreen Wiring Connections

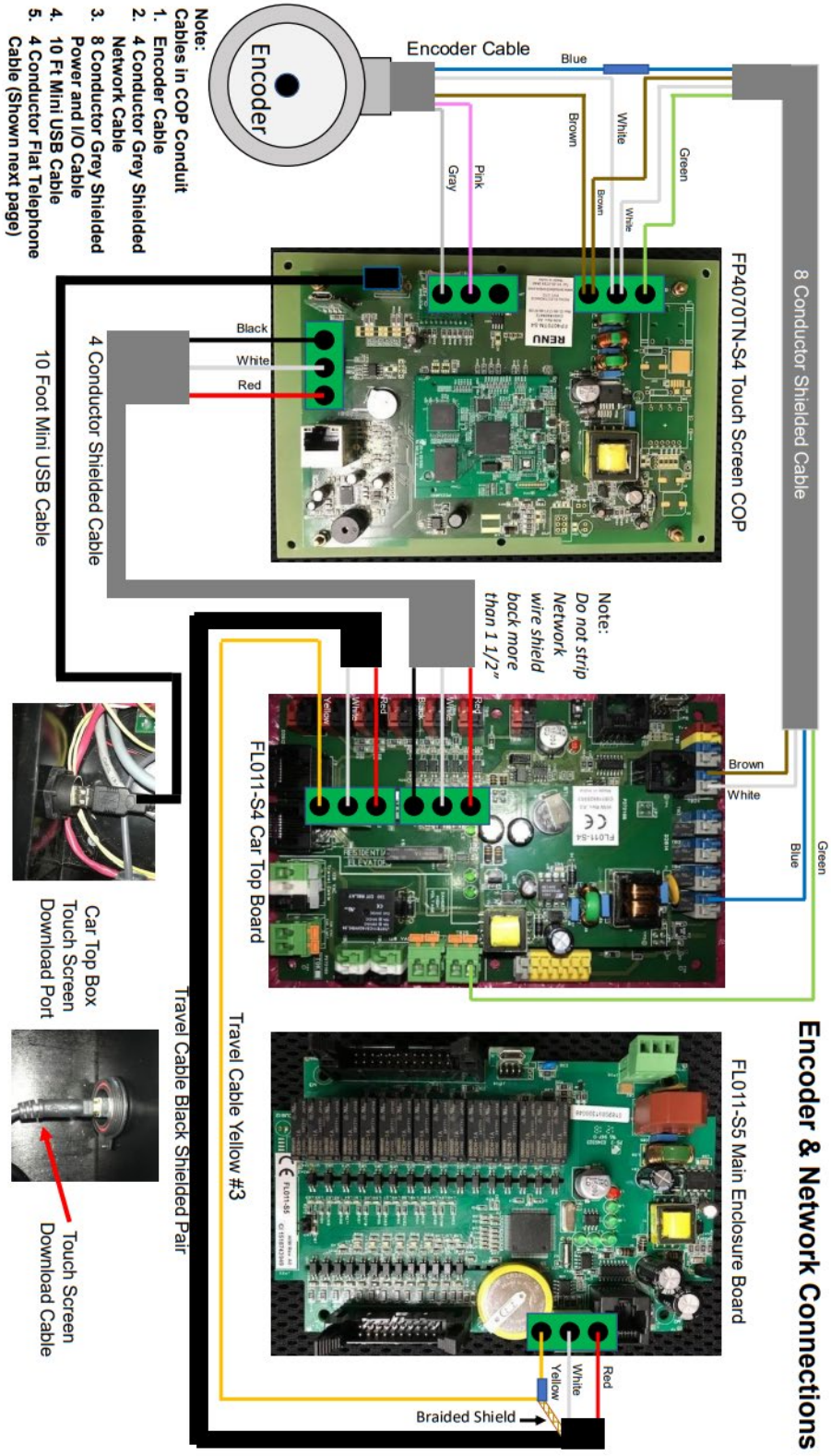

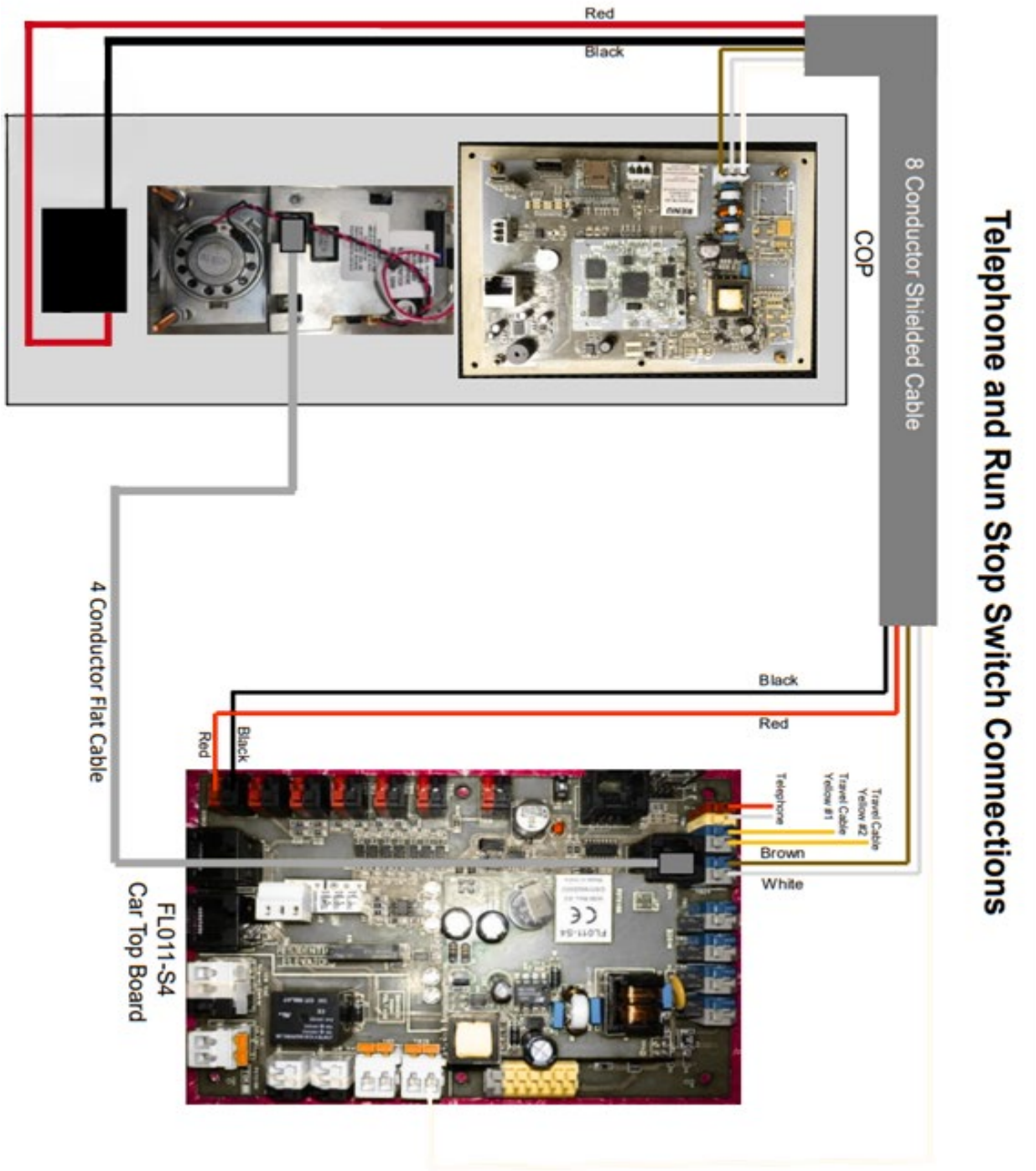

Telephone and Run Stop Switch Connections

Glass Touchscreen

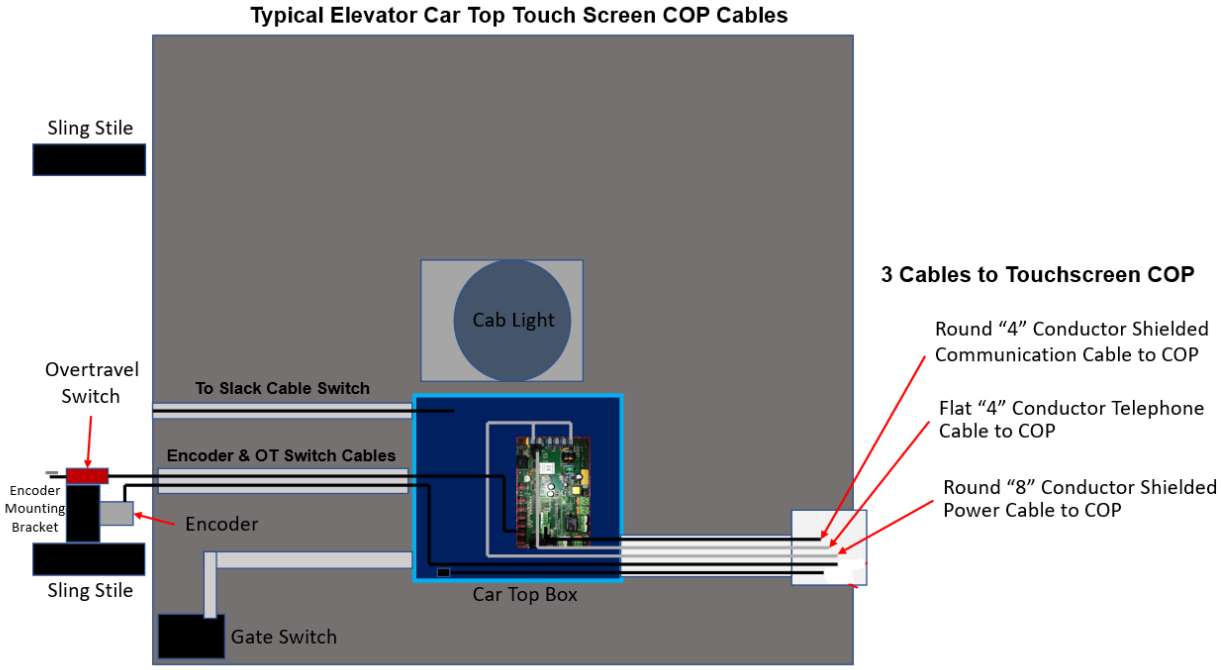

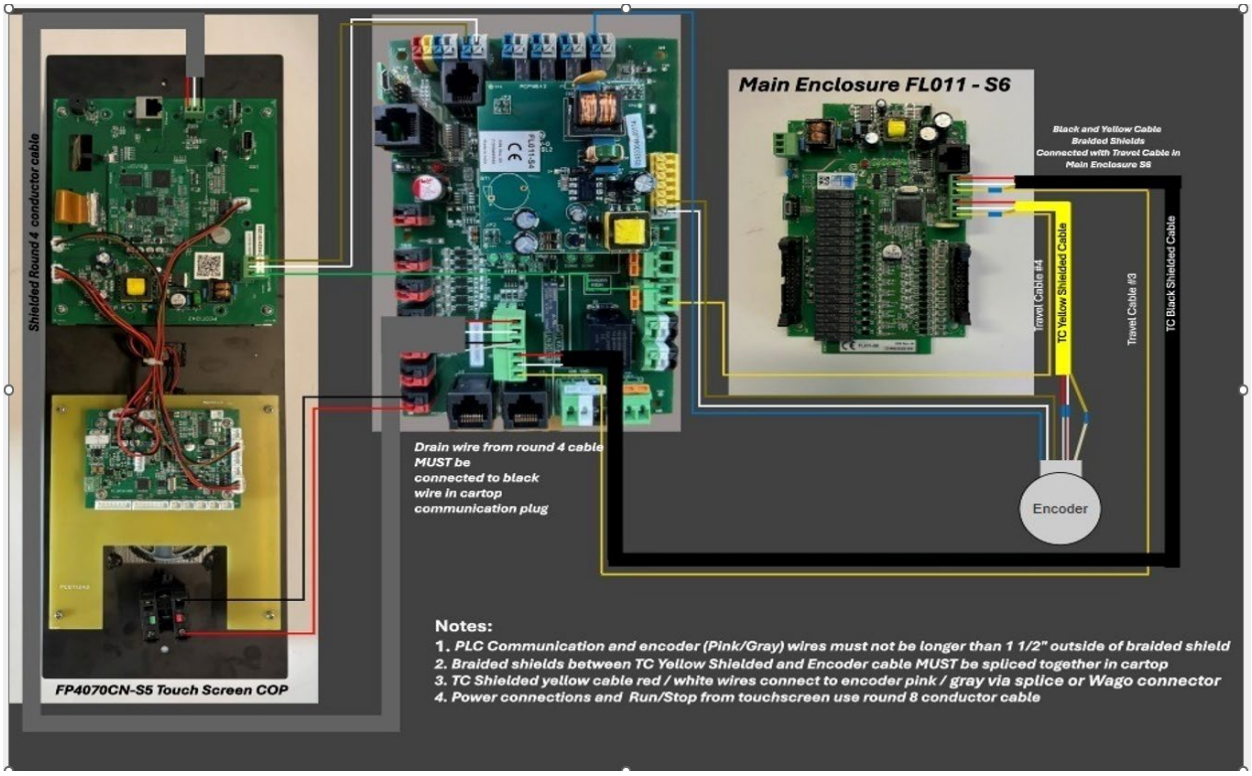

Glass COP Phone Connections

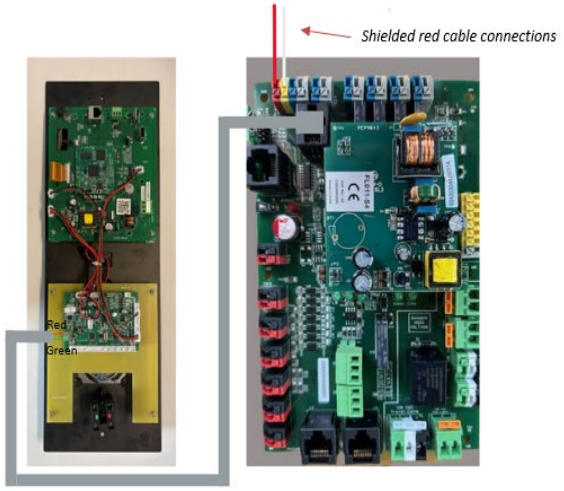

Flat 4 phone wire uses the
2 middle wires (Green / Red) for
connection to COP

FL011-S4 Wiring Connections

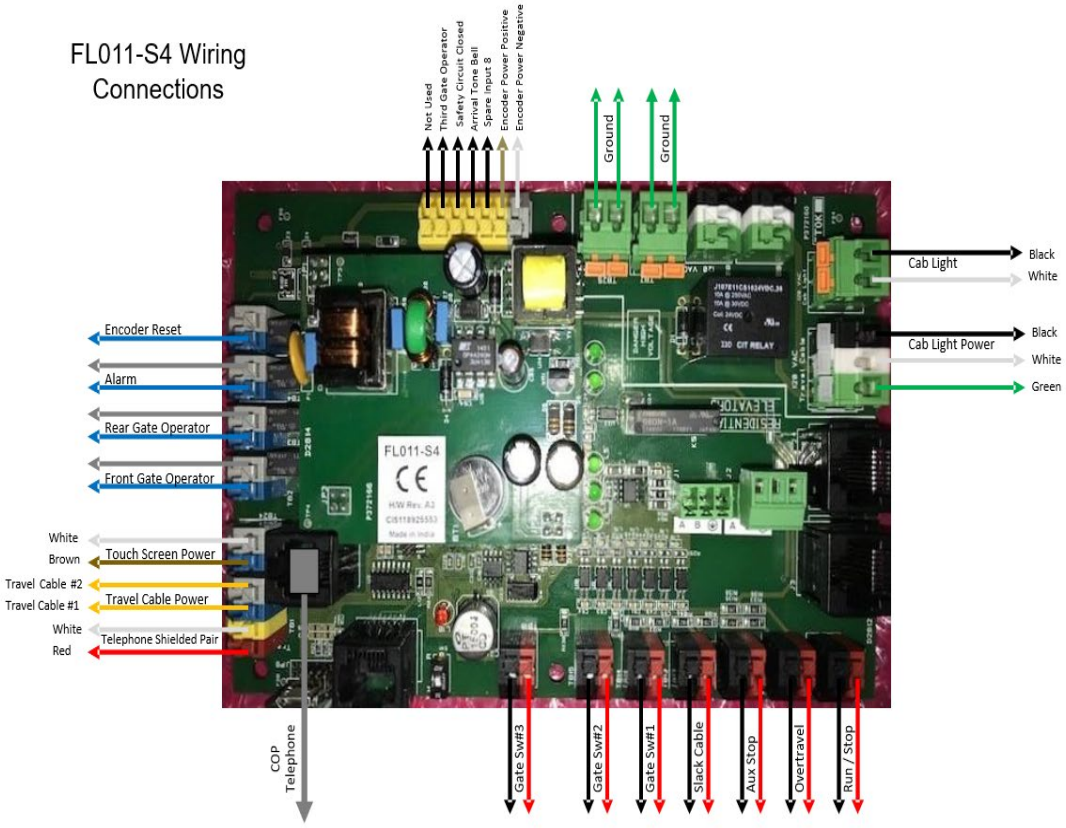

Programming and Startup

PnP Programming:

- The ETOOL will be used.
- Using FlexiDownload, download the latest software into the main controller PLC first using the USB 2.0 port on the left side of the board. Ensure the ribbon cables are unplugged when downloading the software.
- Now, download the latest software to the Cartop PLC using the same port but on the cartop board.
- Once the software is downloaded, plug in the ribbon cables.
- Now use the troubleshooting/setup cable and plug it into the RJ45 Jack on the right side of the PLC.
- Use the Controller Manager application to now enable and setup the elevator. Refer to the JSDS to ensure all options are added accordingly.
- Once the elevator has been set up, enabled, and all safety circuits have been closed, it will begin to lower at a slow speed to the closest floor. Once it reaches the landing, the elevator will need to be put into service mode.
- **Note:** If the elevator moves up instead of down, make sure that the motor leads are correct.
- **Note:** Use extra caution and never enter the shaft without two safety circuits being open (for example, the door and gate being open).

Touchscreen Programming:

- Use the ETOOL to download software to the main controller PLC and the cartop PLC.
- Next, download software into touchscreen COP. Then you will login and set up the elevator via the COP. Remember to refer to the JSDS to enable any options accordingly.
- Enable maintenance mode and check the I-monitor/Diagnostics screen to verify everything is working properly.
- Now set the floor levels via COP.
- Proceed to enable the elevator through the main controller using the ETOOL and controller manager. This will be done through the Enable Elevator tab and clicking the large red button.
- **Note:** The touchscreen software is NOT the same as the PnP software. Always make sure the proper software is being used with the latest version.
- **Note:** Remember to connect to the internet and sync your controller manager after every install.

Testing, Running, and Final Adjustments:

- **Failure to properly test elevator safeties can result in injury or death**.
- Begin the process of running the car and testing the operation of the system. During this process, you will need to address the following items:
    1. Final checking of the car frame guide shoes and tightening of jamb nuts.
    2. Final filing and dressing of all rail joints and lubing of the T rail system. Address all ride quality issues and make sure all hardware is tight and secure.

3. Final adjustment of the reflector boards to the thresholds of each floor level. If touchscreen COP, double check floor levels set.
4. Final testing of each hall station to ensure each operates properly.
5. Final testing of each door lock and keeper to ensure the lock operates properly when arriving at the floor level and the keeper is aligned properly to allow for proper opening and closing. Ensure that each door will only open when the car is on that floor.
    - **Note:** Double check all safety circuits for proper operation. Ensure that when a door or gate is open, the elevator WILL NOT operate.
6. Final testing of COP to ensure it calls to each floor and that the emergency stop, light, and alarm switches work properly. Ensure the phone is hooked up properly.
7. Final testing of the gate switch to ensure when the gate is open more than 1/2 inch to 1 inch that the car stops during travel and will not move when sitting on the floor in the open position. Ensure that the gate alarm is working.
8. Testing of the Pit Stop switch and the Float Switch.
9. Testing of the Car Top Stop switch and cartop run station (if applicable).
10. Testing of the FL Reset Key Switch and Access Door Switch (if applicable).
11. Final testing and acceptance of any other options added at the time of programming.
12. Final testing of the emergency lowering system.
13. Full load weight test and testing of the car safety and slack switch, including the drop test.
14. Check cable tensioning and verify with the REI cable tensioning tool that all 3 cables are equally tensioned. After this, add the rope clips, zip-ties, electrical tape, and anti-spin. Make sure the nuts are pinched on the shackles and the cotter pins are properly installed.
15. Review the minimum items to be painted: pit pan, bottom of cab, and car frame assembly after the cab is built and the weights are in the CWT frame. Use a paint shield when doing any painting. Flat Black Paint is supplied with each job and should only be used; nothing else or any other color is acceptable. Do not get overspray on the walls and pit floor.
16. Install Counterweight Lock.

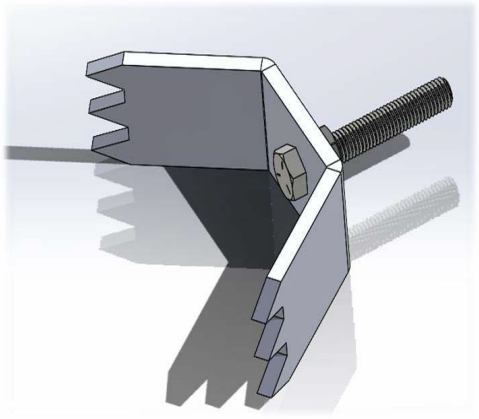

Weight and Drop Test

- Conduct the weight test in increments, starting with 300 lbs., then 600 lbs., then the full rated load of 950 lbs.
- Display your weights so they can all be clearly counted in the required weight test photo.
- Take a picture of the weights in the cab with the elevator 3-5 feet off the first-floor level.
- Run the elevator with the full rated load to every floor several times.
- With the full load rated capacity, place a hydraulic jack halfway extended in the pit and run the elevator down onto a 4x4 wooden post 5 feet long. Make sure the 4x4 post is positioned on the bottom of the sling towards the rails where the steel is angled, not on the flat bar.



- Use a chain fall or winch to lift the CW Frame to simulate a slack cable condition. Release the pressure on the jack at this point.
- Once the cables have slack and the elevator is sitting on the safeties, ensure the safety activation arm has activated the slack cable switch.
- Take a photo of the successful drop test.
- Use your run button to raise the car off the safeties. Remove the jack, 4x4 post, winch/chain fall, and any other tools used for the drop test from the hoistway. Reset the slack cable switch. The car is ready for operation at this point.
- **Note:** At this time, make sure the platform has remained level.
- Now you may disconnect the run button and close the machine room.

Job Wrap Up

Final Clean Up:

- At the completion of the installation, clean and wipe down the cab, hoistway, pit, and preparation areas. Also wipe down doors, jams, walls, and any other surface you have touched and left stains and/or marks on.
- Treat the home and job site as your own; always leave it cleaner than you find it.
- Clean the job site daily, disposing of all trash and placing it in a dumpster or receptacle provided on site. If no receptacle is on site, coordinate with the GC/HO on how trash is to be discarded.

Pictures:

- At the completion of each installation, several pictures will need to be taken to document the installation.

- The following pictures are required at completion of each installation and must be added to the final checklist:
    1. Finished Machine Room.
    2. Finished Cab (each panel).
    3. Fully Closed Gate.
    4. Finished Car Top.
    5. Wiring inside cartop, controller, and behind the COP (if Touchscreen).
    6. Finished Hoistway.
    7. Full Load Weight Test.
    8. Safety Activation Test.
    9. Equipment upon arrival.
    10. Each Landing Door opened and closed, including the LOP, flooring, door hardware, and interlock.
    11. Emergency Access Key location/Crank Handle and access hole.

Taking Measurements:

- Note door compliance measurements at each floor and take pictures of the measurements taken with a ruler.
- **Note:** Door Compliance measurements should never be taken with a tape measure; they need to be taken with a ruler.
- Submit these measurements along with the final checklist on each installation.

Disable Elevator:

- Disable the Elevator unless all doors are in code compliance and the elevator meets code.

Final Checklist:

- After completion of the installation, the final checklist needs to be completed before the installation mechanic leaves the jobsite. It is crucial to fill out the checklist completely and accurately. The installation photos will be added to the final checklist.
- Note on the final checklist the state the elevator was left in, whether the elevator was left on permanent power, and if it has permanent power.
- Note in the final checklist any GC items, REI Items, and/or general notes on the job.
- **GC items** are things the GC needs to address to get the elevator finished and enabled by the sales rep. Some items may be market specific, so know what is required in the market you are installing in. GC Items may include:
    - No Permanent Power.
    - No Active Phone Line.
    - No Access Door.
    - No Door Hardware.
    - No Finished Flooring.
- **REI Items** are things that REI needs to return to the job to complete. We should always be striving to not return to an installation, however, in the occasion of an early install we may need to return to finish the job. REI items may include:
    - Return to install interlocks.

- Return to install gate.