savaria®

Multilift

VERTICAL PLATFORM LIFT

ENCLOSURE INSTALLATION GUIDE

Part No. 000921
23-m03-2023

Standard notations

The following notations may be used throughout this guide to emphasize important safety information, mechanical concerns, and other important information. Please review and follow all of these messages.

DANGER	Danger messages indicate an imminently hazardous situation, which, if not avoided, results in death or serious injury. All danger messages feature a standard ISO safety alert symbol followed by the signal word DANGER in capitalized black lettering on a red background.
WARNING	Warning messages indicate a potentially hazardous situation, which, if not avoided, could result in death or serious injury. All warning messages feature a standard ISO safety alert symbol followed by the signal word WARNING in capitalized black lettering on a dark yellow background.
CAUTION	Caution messages indicate a potentially hazardous situation, which, if not avoided, could result in death or serious injury. All caution messages feature a standard ISO safety alert symbol followed by the signal word CAUTION in capitalized black lettering on a yellow background.
CAUTION	Caution messages that do not include the ISO safety alert symbol indicate a potentially hazardous situation for the machine only, which, if not avoided, could result in damage to the machine. All caution messages include the signal word CAUTION in capitalized black lettering on a yellow background.
NOTE	Note messages provide information, such as reminders, general information about a previous statement, or additional guidelines that do not fit into the flow of the preceding text. All note messages include the signal word NOTE in capitalized white lettering on a blue background.

Hazards and warnings

ELECTRICAL SHOCK HAZARD

Do not connect or disconnect wiring while the power is on. Before servicing, disconnect all power to the equipment.

WARNING

SUDDEN MOVEMENT HAZARD

System may start unexpectedly upon application of power. Unpredictable equipment operation may result in death or serious injury.

ELECTRICAL SHOCK HAZARD

Savaria Concord Lifts, Inc. is not responsible for any modifications of the product made by the user.
Do not allow unqualified personnel to use equipment. Failure to comply could result in death or serious injury.
Maintenance, inspection, and replacement of parts must be performed only by authorized personnel familiar with installation, adjustment, and maintenance.
Do not remove covers or touch circuit boards while the power is on.

WARNING

FIRE HAZARD

Do not use an improper voltage source.
Verify that the rated voltage matches the voltage of the incoming power supply before applying power.

Job site tools

Tools and materials used during installation:

- Allen wrenches
- Screwdrivers (slotted, Phillips, Robertson)
- Socket and wrench set
- Needle-nose pliers
- Side cutters
- Large crescent wrench
- Pry bar
- Vise-grip pliers (standard and wide-jaw welder's type)
- Drift pin punch
- Rubber mallet
- Box cutter/knife
- Scissors
- 10" medium cut file (for filing joints) - optional
- Coated steel shims, minimum 4" square - provided
- Wall anchors
- 25' tape measure
- Carpenter's level and square
- Plumb bob and line
- Chalk line
- Metal and wood stud finder
- Reversible hand drill
- Concrete drill bits 1/4", 3/8", 1/2"
- Hammer drill for concrete fasteners
- Trouble light for hoistway
- 25 feet of 1/2" rope - optional
- 100' (30 m) extension cord (minimum 14 gauge wire) - optional
- Assorted butt electrical wire connectors and crimping tool
- 1/2" electrical box connectors (strain reliefs) - provided
- Wire puller (50 feet of 1/8" fish tape) - optional
- Wire marker tape
- Wire crimper
- Wire strippers
- Wire tie-wraps
- Volt-ohm (multi) meter
- Safety items: hard hats, safety glasses, steel toe shoes, heavy gloves, safety harnesses, etc.
- Chain hoist - optional
- Hand dolly

- Scaffolding or ladders and planks to aid in tower assembly
- Shop vac
- Rags and cleaning solvent
- General purpose grease
- Funnel for oil
- Silicone sealant
- Materials to close off hoistway during installation
- Suction lifter tools (see note and photo below)

NOTE

You may want to use suction lifter tools to assist with installation of the enclosure walls. An example of the tool is shown in the photo below.

Suction lifter tool



List of steps for enclosure installation

⚠ WARNING

Follow the steps provided to ensure your safety during installation. Failure to follow instructions renders the Limited Warranty null and void. In addition, any party installing the product who deviates from the installation instructions agrees to indemnify, save, and hold harmless the manufacturer from any and all loss, liability, or damage that may occur as a result of the deviation.

The following table lists the installation steps for the enclosure.

Steps	Page
Description of enclosure walls	4
Assemble enclosure base (as applicable)	6
Install flexible conduit for wiring	8
Install tower corner pieces	8
Install narrow A and B walls	9
Install end E or C wall	10
Install outside D wall	10
Install end C or E wall	11
Install pit switch in narrow wall	12
Install GFI receptacle in narrow wall (where applicable per local code)	12
Pull wires through and feed into tower	13
Install additional levels as required	13
Install tower-to-enclosure connecting brackets	14
Install enclosure safety covers	14
Install base conduit covers	15
Anchor enclosure to pit/floor	16
Install caps on enclosure walls	17
Install the dome (optional)	18
Install the sloped roof (optional)	19
Install the fan assemblies (optional)	20
Appendix A: Cleaning	21

Revision history of this guide

- February 28, 2013 – Initial release
- January 21, 2016 – Added new STEPS 8 and 9 on page 12
- July 11, 2016 – Removed reference to two-sided tape from STEP 17 on page 18; Added new STEP 18 Install Sloped Roof on page 19
- March 23, 2023 - Added Appendix A: Cleaning to page 21

Description of enclosure walls

The enclosure walls are identified by a letter and number. The letter indicates the position of the wall as shown in Figure 1 below, while the number would indicate the level at which the wall is installed. From bottom to top, levels are identified as 1, 2, 3, etc.

Figure 1
Enclosure walls

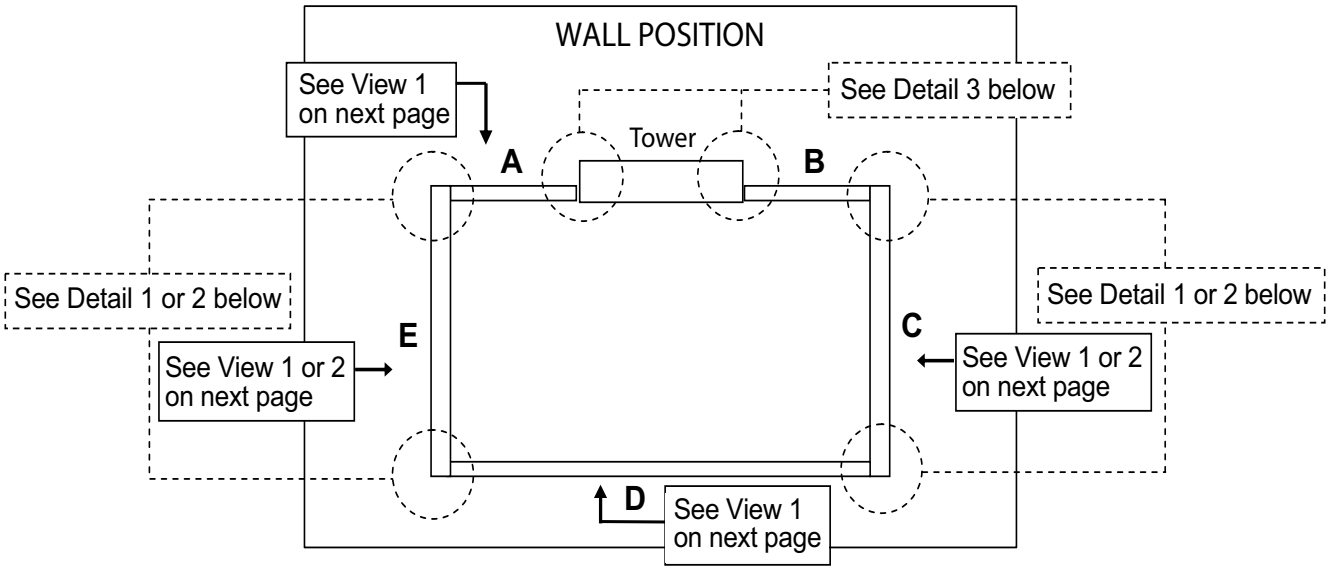

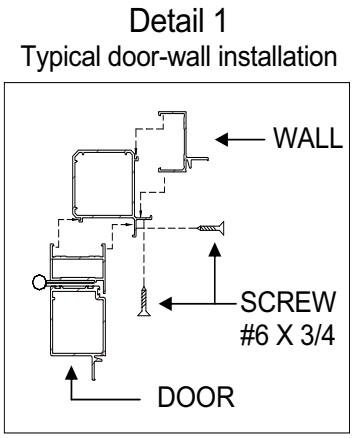

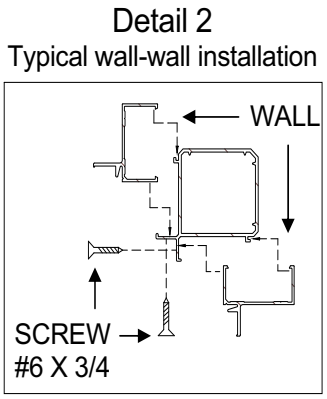

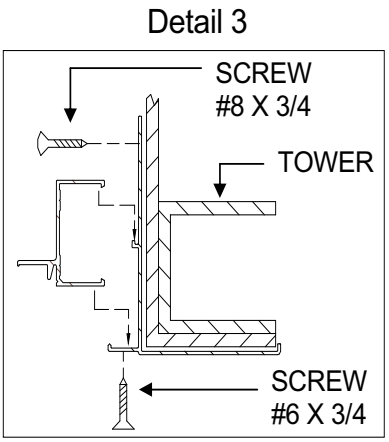

View 1: Typical level 1 wall

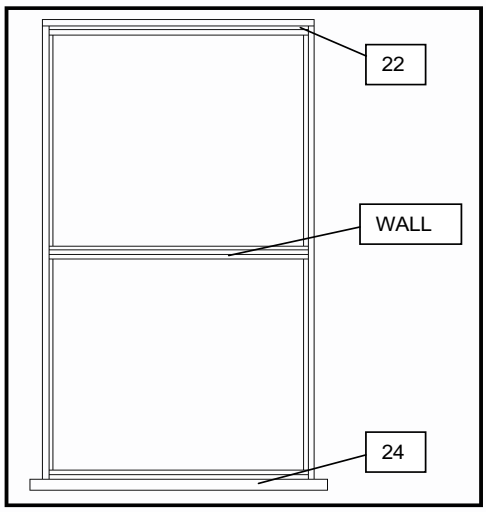

View 2: Typical level 1 door

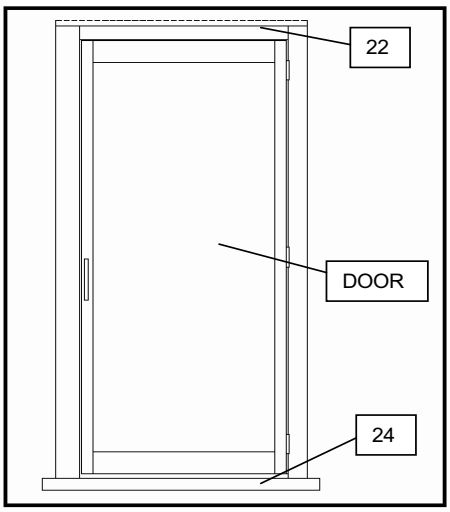

NOTE: Extrusion 24 is not applicable for steel base.

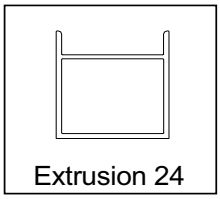

Extrusion # 24, used at the base of the enclosure, should already be fastened to the base of the level 1 walls. If not, lay the extrusions on the ground and mount the walls on top of them.

View 1: Typical intermediate level wall

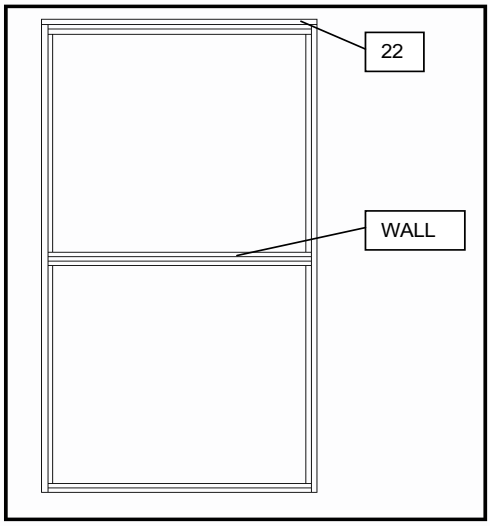

View 2: Typical intermediate level door

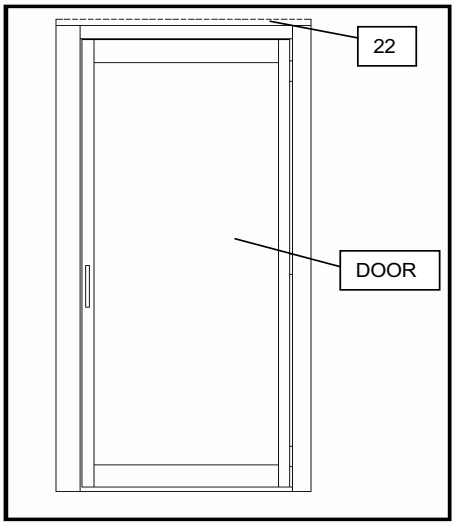

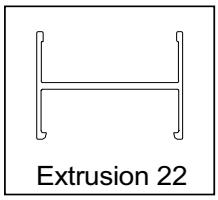

Extrusions # 22 are used to join the different levels together. They should already be installed at the top of the level 1 and intermediate walls.

View 1: Typical top level wall

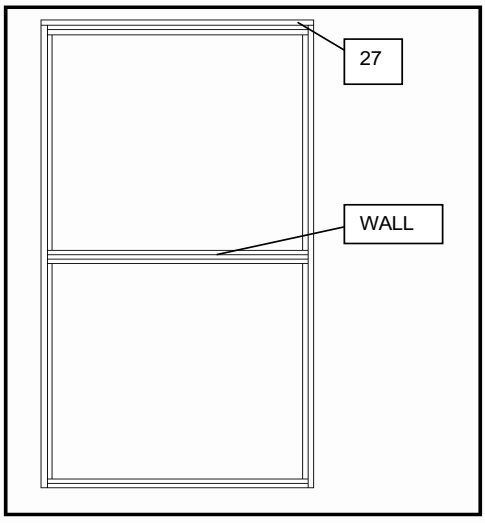

View 2: Typical top level door

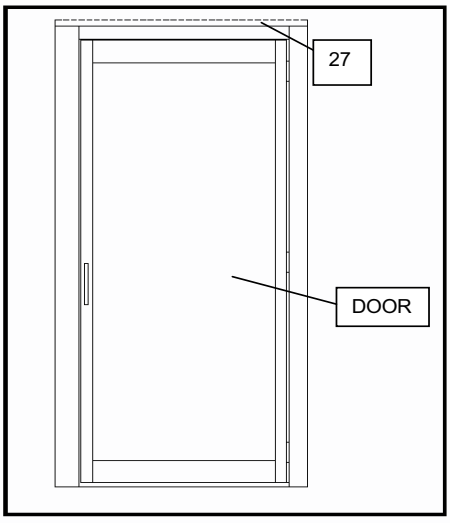

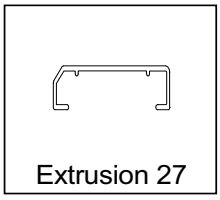

Step 1
Assemble enclosure base (as applicable)

Assemble the enclosure base (as applicable).

Procedure

1 The enclosure base has five pieces, each with pem studs for assembly. Assemble the base pieces together using the 5/16”hardware (flat washers, lock washers and nuts) from kit 320448. The following photos show the various stages of the base assembly. See the next page for a drawing of the assembled base pieces.

NOTE

Make sure the front base piece is installed with the screw holes facing UP so you can attach the conduit cover to it.

Figure 2
Enclosure base assembly

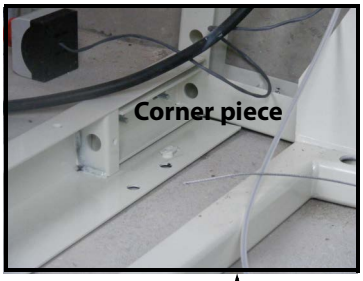

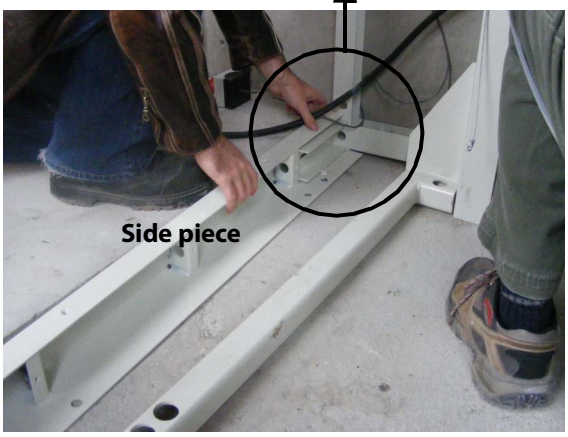



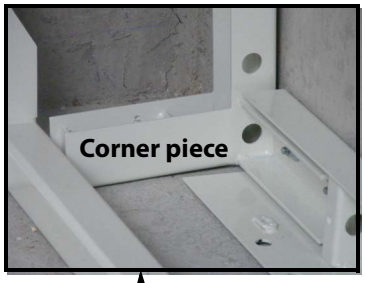



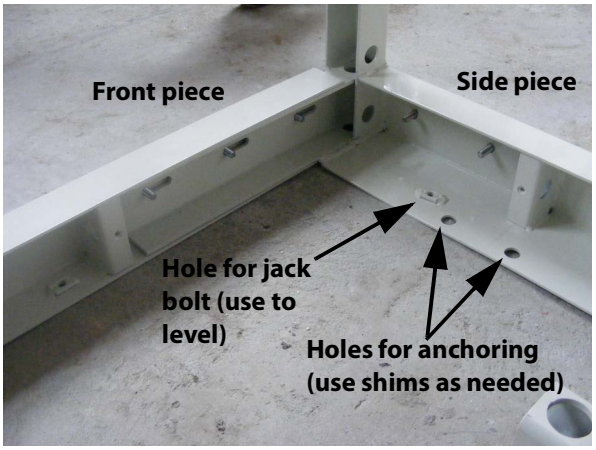

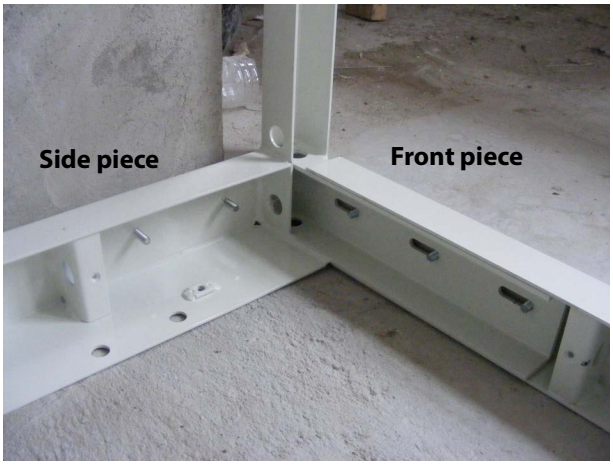

Figure 3
Base assembled

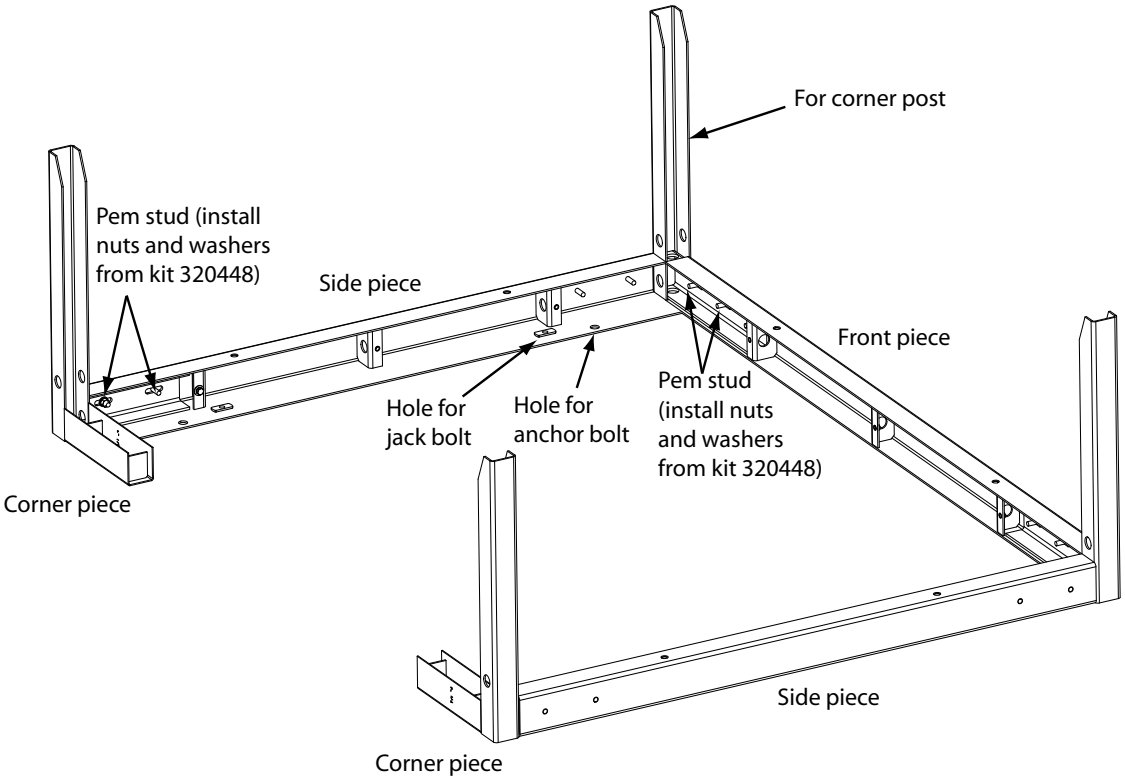

2 Install the wall support channels (320434) on top of the base pieces at the non-entrance sides. Secure the channels to the base pieces using bolts (from kit 320448) inserted through the slots in the wall channel holders and into the pem nuts in the base pieces (see below).

Figure 4
Install wall support channels

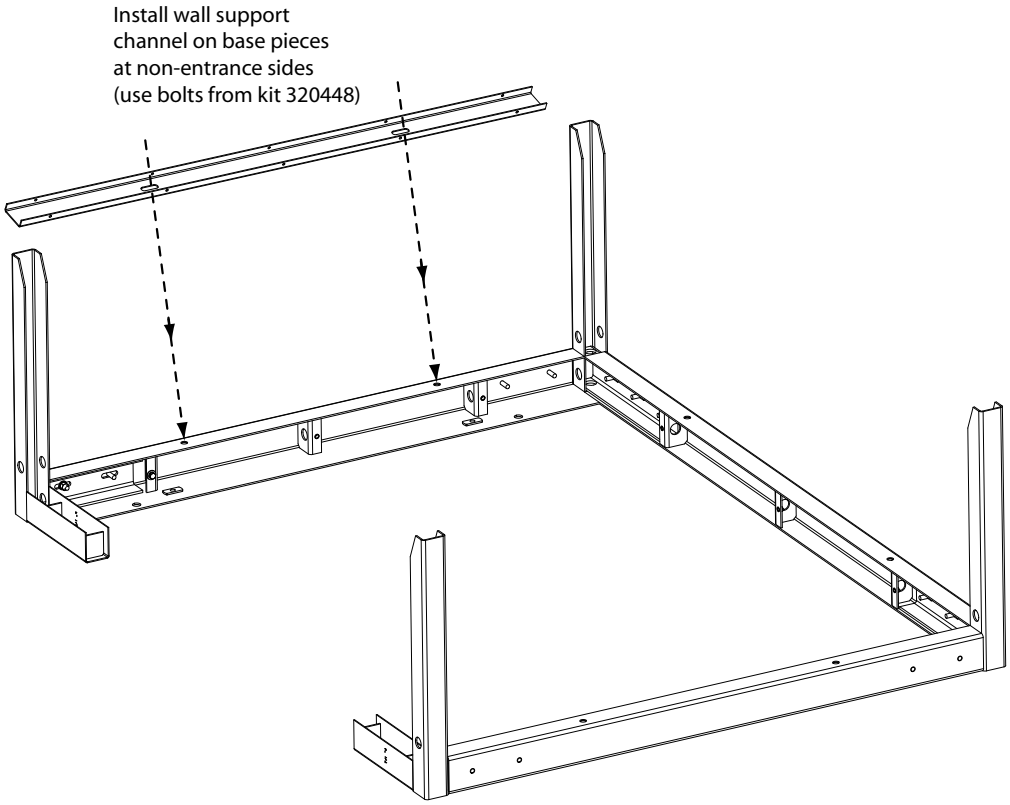

Step 2
Install flexible conduit for wiring

Install the flexible conduit.

Procedure

NOTE

Be sure to install the flexible conduit BEFORE installing the enclosure walls; otherwise you may not be able to access the sides of the tower once the walls are in place.

1 Before installing the conduit, feed a fish wire through the flexible conduit to help pull the wires through.
2 Secure one end of the conduit to the large entry hole on the side of the tower (example shown below).
3 Secure the other end of the conduit to the large conduit hole on the corner post base piece. Note that in the illustration below, the narrow wall is shown installed but should NOT be installed before the conduit.
4 The conduit (with fish wire) is now in place for routing the wiring in a later step.
5 Repeat steps 1 through 4 to install a conduit at the other side of the tower if necessary.

Figure 5
Example of flexible conduit installed



NOTE

In the following steps, it is very IMPORTANT that you level the walls and corner posts as you are installing them and check that they remain level throughout the installation.

Step 3
Install tower corner pieces

Install the tower corner pieces at the sides of the tower.

Procedure

1 Place one of the tower corner pieces against the side of the tower.

Figure 6
Installing tower corner pieces

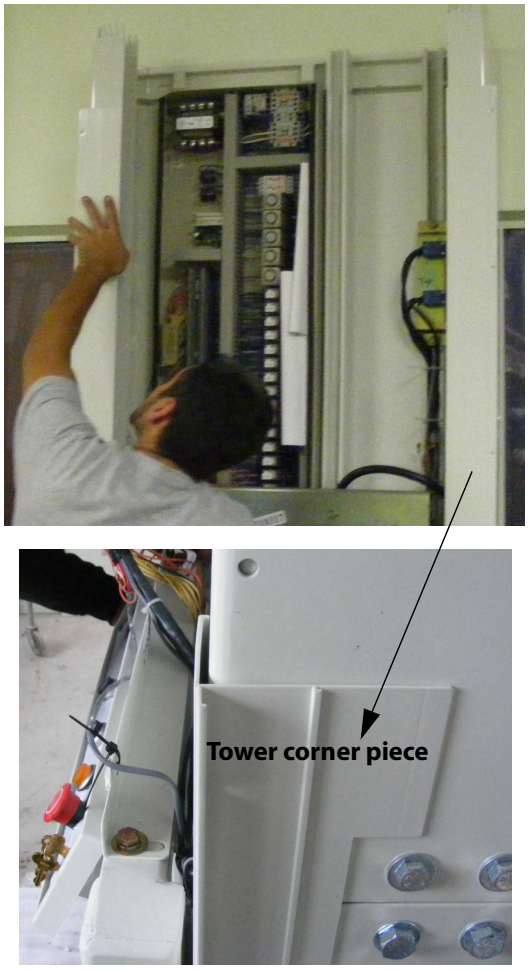

2 From the side of the tower, secure the corner piece to the tower using #8 x 3/4 pan head screws. Refer to Detail 3 below.
3 Repeat steps 1 and 2 for the tower corner piece at the other side of the tower.

Detail 3

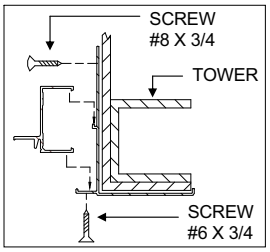

Step 4
Install narrow A and B walls

Install the narrow A and B walls at the sides of the tower.

Procedure

NOTE

If you have the optional enclosure fan assemblies, refer also to STEP 14 on page 17.

1 Slide the corresponding rear corner post (AE or BC) into position making sure the screw side of the post is facing inward toward the tower.

Figure 7
Installing AE corner post

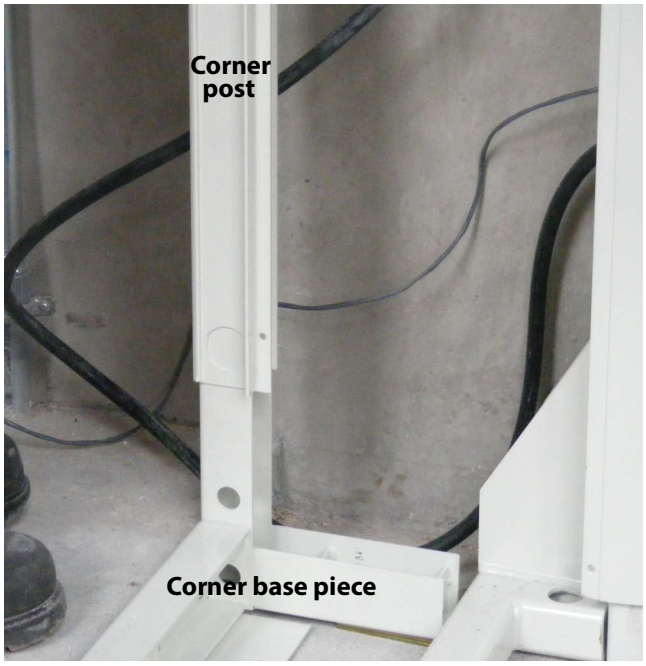

2 Fit one of the narrow walls (A or B wall) between the tower corner channel piece and the corner post.

3 From the front of the tower, secure the narrow wall to the tower corner channel piece using #6 x 3/4 flush screws. Refer to Detail 3 at the left.

4 From the front of the tower, secure the narrow wall to the corner post using #6 x 3/4 flush screws. Refer to Detail 1 or 2 below (as applicable).

5 Repeat steps 1 through 4 for the second narrow wall.

Detail 1
Typical door-wall installation

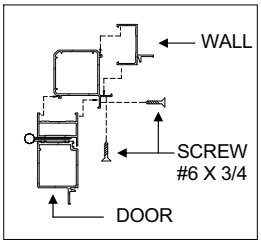

Detail 2
Typical wall-wall installation

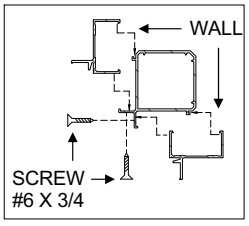

Figure 8
Narrow A and B walls

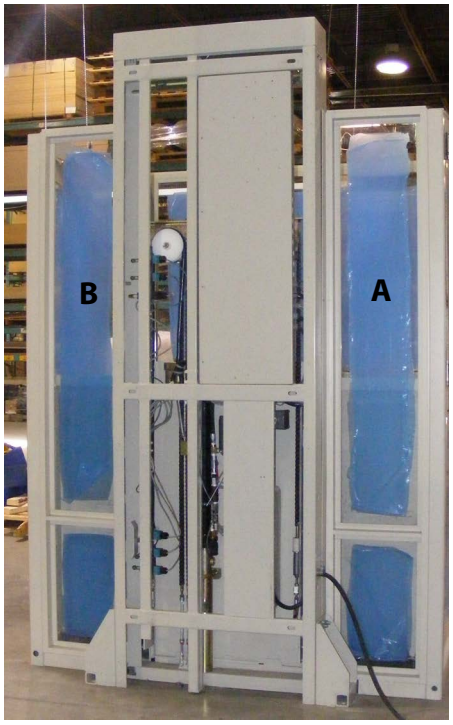

Narrow A and B walls

6 Note that the walls and corner posts are each marked with an alphanumeric designation to assist with assembly (see the example below). The letter identifies the position of the wall and the number identifies the level at which the wall is to be installed.

Figure 9
Identification labels

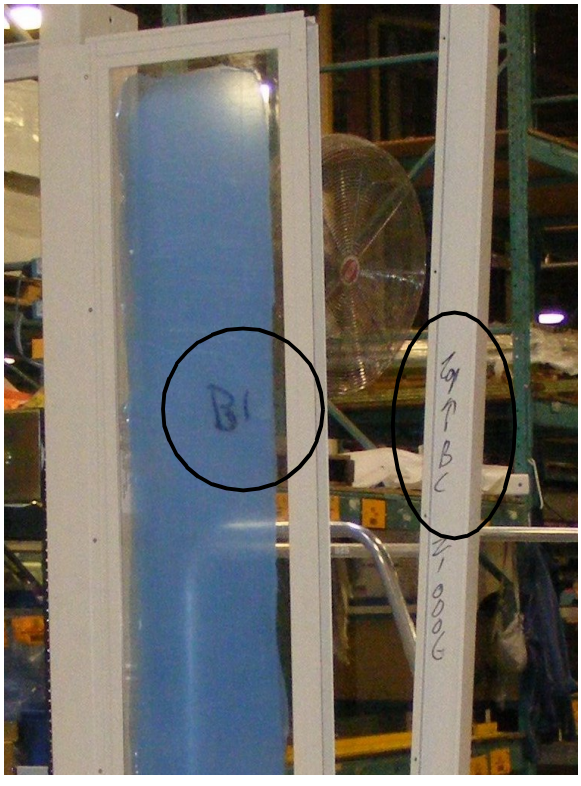

Step 5
Install end E or C wall

Install the end E or C wall (whichever is not the door). The end E wall is used in the procedure below.

Procedure

1 If the wall has a door or gate, route the wires down the end of the wall and feed them through the hole in the base channel to the inside of the enclosure. You will connect the wires to the controller in a later step.

NOTE

Route all wires BEFORE securing the wall in place.

2 Slide the front DE corner post into position.

3 Position the end E wall between the rear AE corner post (attached to the narrow A wall) and the DE corner post.

4 From inside the enclosure, secure the end E wall to the rear AE corner post using #6 x 3/4 flush screws. Refer to Detail 1 or 2 below (as applicable).

5 From inside the enclosure, secure the end E wall to the front DE corner post using #6 x 3/4 flush screws. Refer to Detail 1 or 2 below (as applicable).

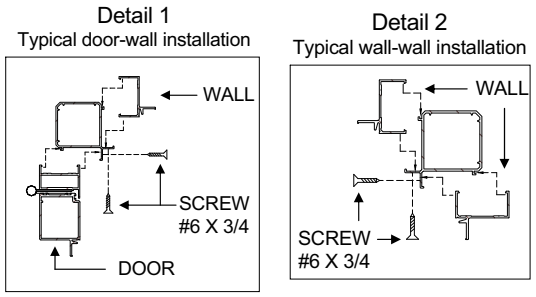

Figure 10
End E wall

End E wall

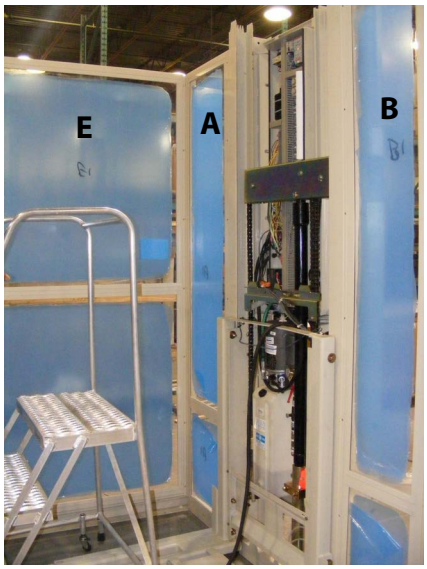

Step 6
Install outside D wall

Install the outside D wall.

Procedure

NOTE

For the installation illustrated here, the outside D wall has an upper gate. In this case, you would install the lower outside wall first, followed by the upper outside wall gate.

1 If the wall has a door or gate, route the wires down the end of the wall and feed them through the hole in the base channel to the inside of the enclosure. You will connect the wires to the controller in a later step.

NOTE

Route all wires BEFORE securing the wall in place.

2 Slide the front CD corner post into position.

3 Position the outside D wall between the front DE corner post (attached to the end E wall) and the CD corner post.

4 From inside the enclosure, secure the outside D wall to the front DE corner post using #6 x 3/4 flush screws. Refer to Detail 1 or 2 at the right (as applicable).

5 From inside the enclosure, secure the outside D wall to the front CD corner post using #6 x 3/4 flush screws. Refer to Detail 1 or 2 at the right (as applicable).

Figure 11
Outside D wall

Outside D wall



Step 7
Install end C or E wall

Install the end C or E wall (whichever is the door). The end C wall is used in the procedure below.

Procedure

NOTE

For the installation illustrated here, the end C wall has a door. In this case, you would install the door section first, followed by the door transom at the top.

1 If the wall has a door or gate, route the wires down the end of the wall and feed them through the hole in the base channel to the inside of the enclosure. You will connect the wires to the controller in Step 6.

NOTE

Route all wires BEFORE securing the wall in place.

2 Position the end C wall between the front CD corner post (attached to the outside D wall) and the rear BC corner post (that is attached to the narrow B wall).

3 From inside the enclosure, secure the end C wall to the front CD corner post using #6 x 3/4 flush screws. Refer to Detail 1 or 2 below (as applicable).

4 From inside the enclosure, secure the end C wall to the rear BC corner post using #6 x 3/4 flush screws. Refer to Detail 1 or 2 below (as applicable).

Detail 1
Typical door-wall installation

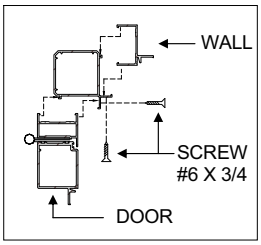

Detail 2
Typical wall-wall installation

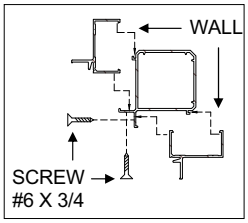

Figure 12
End C wall

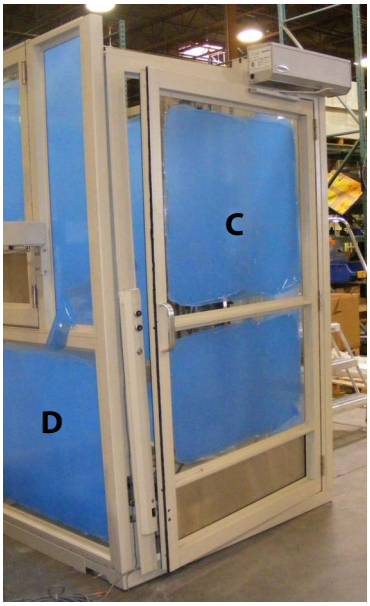

End C wall

Step 8
Install pit switch in narrow wall

Install the pit switch in narrow wall A or B, depending on your installation.

Procedure

1 Locate the circular cutout in the wall and position the pit switch contact block on the back of the wall at this location.
2 Secure the contact block to the wall (from the front) with four screws.
3 From the front of the wall, mate the red button to the contact block and twist and lock it in place.
4 Route the cable from the pit switch to the controller and connect per the Electrical Schematics shipped with the lift.

Figure 13
Cutout for pit switch

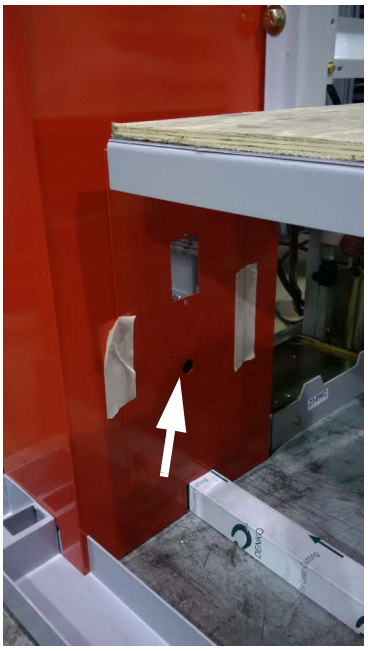

Step 9
Install GFI receptacle in narrow wall (where applicable per local code)

Install the GFI receptacle in narrow wall A or B, depending on your installation (where applicable per local code). You may also need to install a slim light that won't interfere with cab operation.

Procedure

NOTE

A GFI receptacle may be required depending on your local code. Savaria offers an optional kit P/N 324602 to meet this code requirement. Note that in most cases, a light is also required. It must be a very slim light that won't interfere with cab operation).

1 Install the GFI receptacle into the rectangular cutout in the narrow wall as shown below. Install the light if required.
2 Route and connect the electrical wiring as required.

Figure 14
Cutout for GFI receptacle

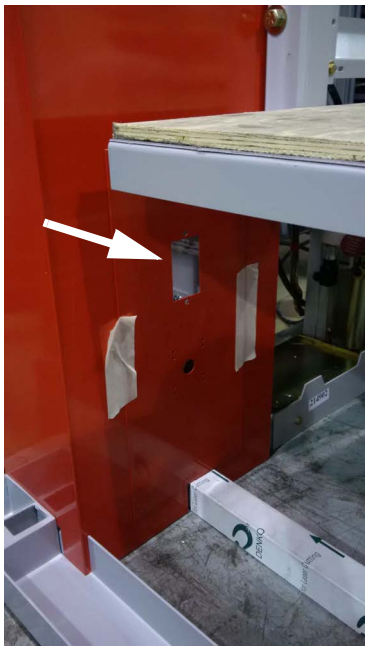

Step 10
Pull wires through and feed into tower

Pull the wires through and feed them into the tower.

Procedure

NOTE

All wires that were routed to the inside of the enclosure must now be routed to the controller in the tower.

1 Use the fish wire in the flexible conduit to help feed the wires from inside the enclosure to the inside of the tower.
2 Pull the wires all the way through the flexible conduit which is attached to the corner post of the narrow wall and the side of the tower (see below).
3 Repeat the steps 1 and 2 for any wires at the other side of the tower.
4 Route the wiring up to the terminal strip in the controller and connect per the wiring diagrams shipped with the lift.

Figure 15
Flexible conduit installed



Step 11
Install additional levels as required

Install additional levels of the enclosure as required.

Procedure

1 Install additional levels of the enclosure walls using the instructions provided in the previous steps.
2 Refer also to the earlier section “Description of enclosure walls”.
3 Use the aluminum splice tubes provided to join the corner posts together (Extrusion #23). Insert the tubes into the corner posts and use 1/4″ diameter self-tapping screws to secure them. The screws should be installed on the non-visible face of the corner post.

Figure 16
Join corner posts

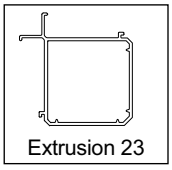



Step 12
Install tower-to-enclosure connecting brackets

Install triangular connecting brackets at both sides of the tower.

Procedure

1 Attach a triangular connecting bracket between the tower and the enclosure narrow wall at both sides of the tower. These brackets help to square the enclosure to the tower.
2 Secure in place with hardware provided.

Figure 17
Tower to enclosure connecting brackets



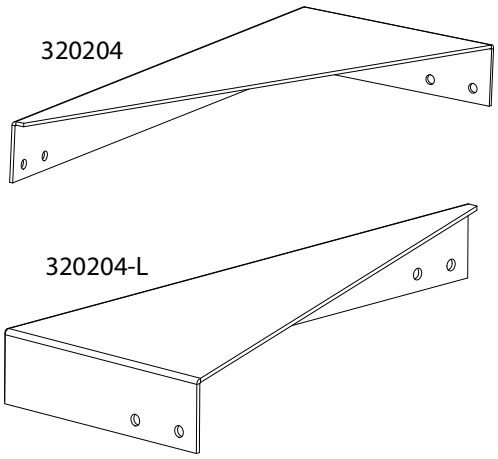

Step 13
Install enclosure safety covers

Install enclosure safety covers at both sides of the tower.

Procedure

1 Attach a safety cover to the tower and the enclosure narrow wall at both sides of the tower. These safety covers prevent debris from being dropped down in behind the enclosure.
2 Secure in place with hardware provided

Figure 18
Enclosure safety covers



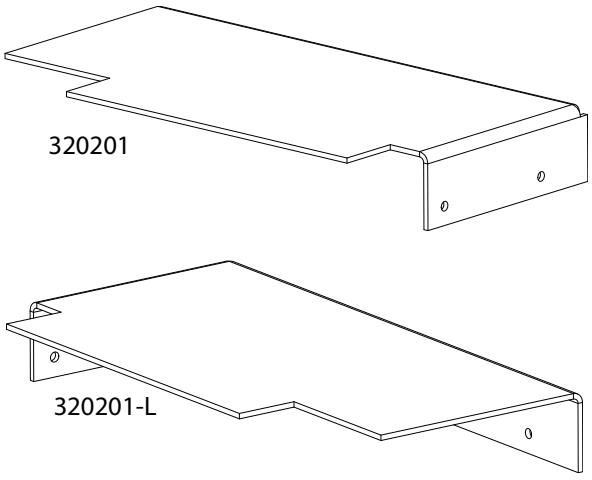

Step 14
Install base conduit covers

Install the base conduit covers.

Procedure

1 Install the conduit covers (320446) on the base pieces inside the enclosure to hide the wiring. Secure the covers using the 1/4" hardware (bolts, flat washers, lock washers) from kit 320448.

Figure 19
Install conduit covers on base pieces

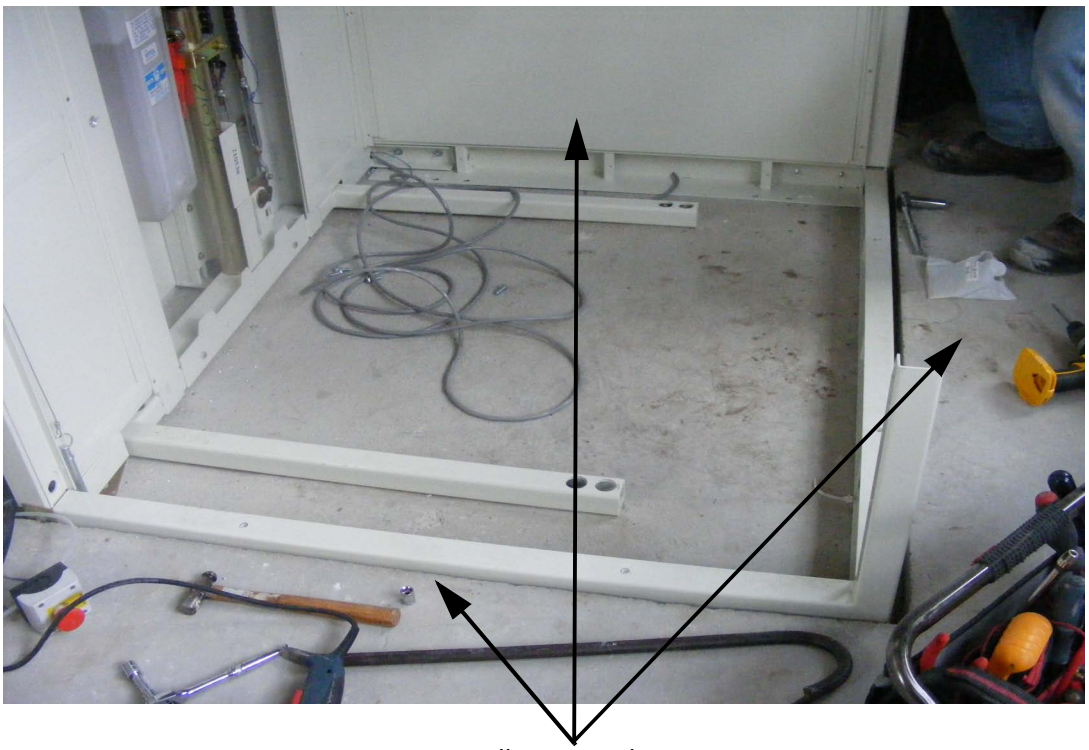

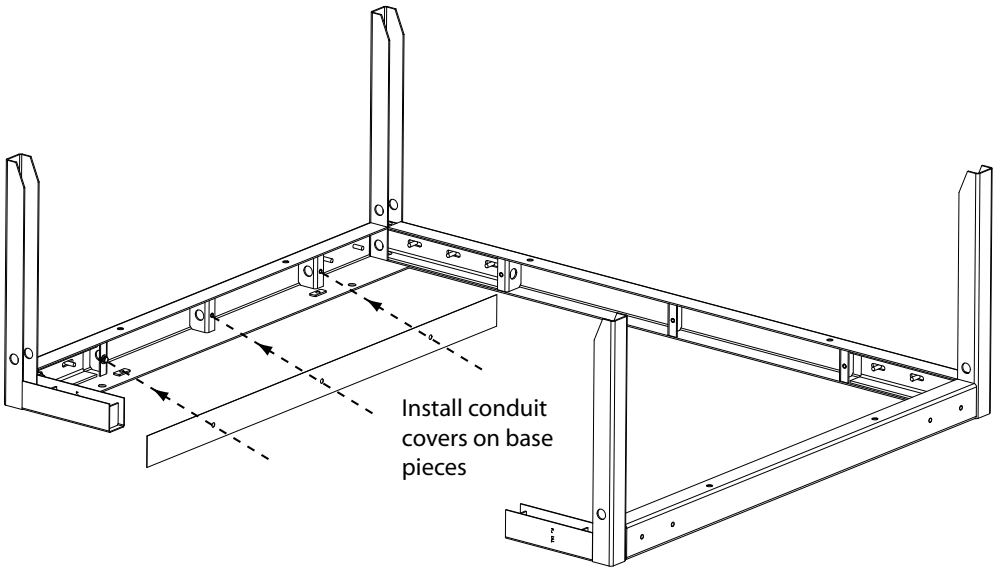

Step 15
Anchor enclosure to pit/floor

Level and then anchor the enclosure to the pit or floor using one of the following procedures (with or without base).

Procedure

Enclosure with base

1 Ensure the enclosure walls are square and secured together completely with the hardware provided.
2 Level the enclosure and then shim and anchor the base to the pit/floor.
   a. Use jack bolts as required (in the jack bolt holes at both sides of the enclosure) to help level the enclosure.
   b. Drill the holes for the anchor bolts through the anchor bolt holes at both sides of the enclosure.
   c. Anchor the base of the enclosure to the pit/floor using the appropriate anchor bolts. Before tightening down the anchor bolts, level the enclosure by inserting the necessary number of shims 320651 (shown below) around the anchor bolts under the base pieces.

Figure 20
Anchor enclosure to pit/floor

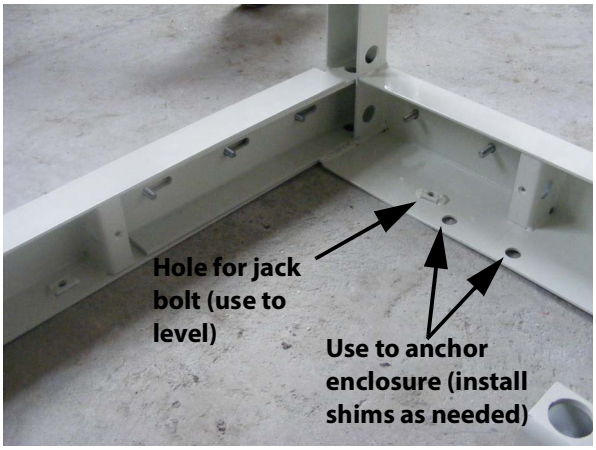

Figure 21
Shim 320651

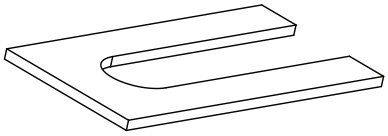

Enclosure without base

1 Ensure the enclosure walls are square and secured together completely with the hardware provided.
2 Ensure the enclosure is level. Shim the enclosure walls as required.
3 Once the enclosure is level and square, fasten the base of the walls to the floor using the six angle brackets provided.
4 Use two metal screws to attach the angle bracket to the enclosure and the appropriate anchor bolt to attach the angle bracket to the floor.

Figure 22
Angle brackets to anchor enclosure



Step 16
Install caps on enclosure walls

Install caps on the enclosure walls and corner posts.

Procedure

1 If you are not installing a dome, install caps on the tops of the enclosure walls and on the corner posts.

Figure 23
Install caps

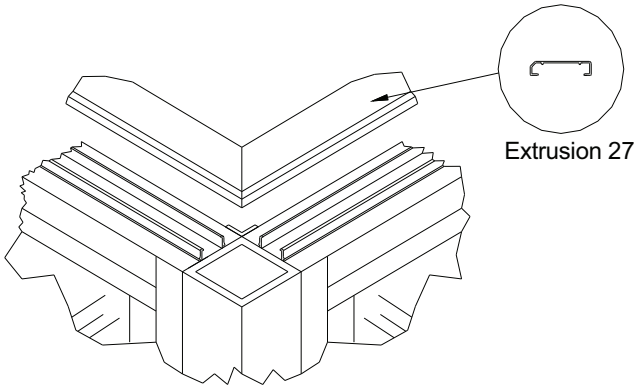

Step 17
Install the dome (optional)

Install the dome (optional) on the top of the enclosure.

Procedure

> **⚠ WARNING**
>
> The dome assembly is heavy and damage to the equipment or personal injury could result from mishandling. Ensure there are two people performing the installation. Be careful when installing the dome in windy conditions.

1 Carefully plan out the installation of the dome.
2 Orient the dome as required and carefully place it on top of the enclosure structure.
3 At each corner, be sure to seal the entire joint of the dome support using silicone.
4 Secure the dome to the top enclosure extrusions using #8 x 3/4 self-tapping pan head screws. The screws will be inserted horizontally through the vertical flanges.

Figure 24
Installation of dome and dome support

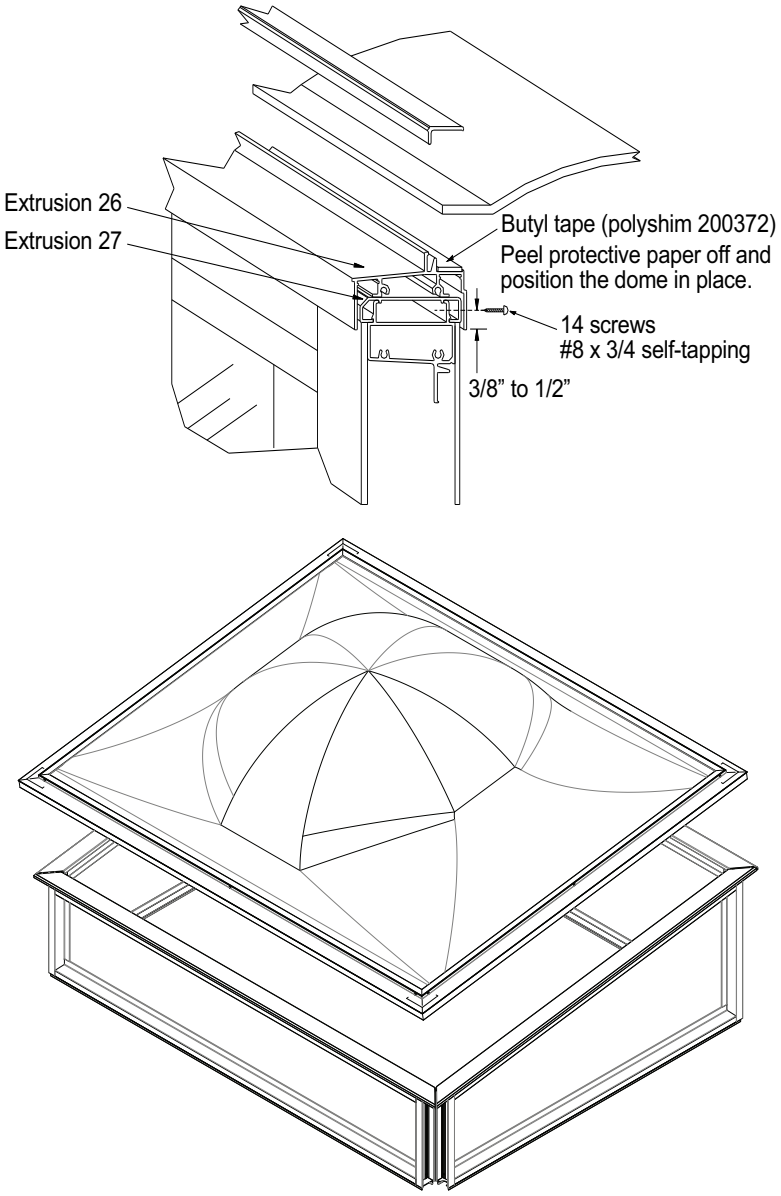

Step 18
Install the sloped roof (optional)

Install the sloped roof (optional) on the top of the enclosure.

Procedure

> **⚠ WARNING**
>
> The sloped roof is heavy and damage to the equipment or personal injury could result from mishandling. Ensure there are two people performing the installation. Be careful when installing the sloped roof in windy conditions.

1 Carefully plan out the installation of the sloped roof.
2 Orient the sloped roof as required and carefully place it on top of the enclosure structure.
3 At each corner, be sure to seal the entire joint of the dome support using silicone.
4 Secure the sloped roof to the top enclosure extrusions using #8 x 3/4 self-tapping pan head screws.

Figure 25
Installation of sloped roof

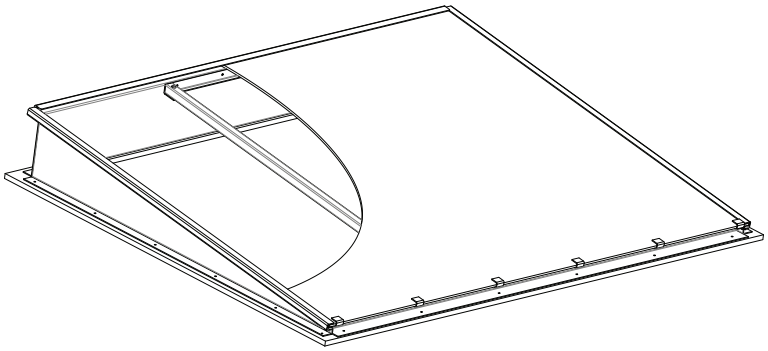



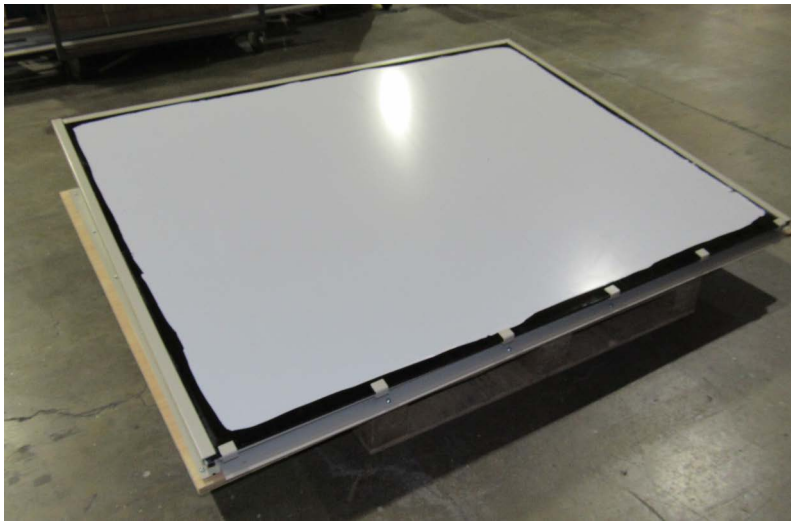

Step 19
Install the fan assemblies (optional)

Install the fan assemblies (optional).

Procedure

If you have the optional ventilation package for the enclosure, the fan assemblies (323864) will be pre-installed into each of the narrow walls A and B as shown at the right.

Figure 26
Fan assembly P/N 323864

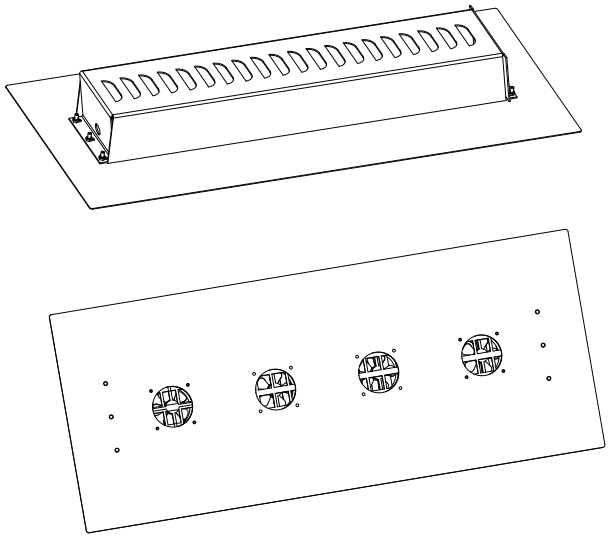

1 Install the narrow A and B walls (with fan assemblies) as described in STEP 4 on page 9.
2 Connect the fan wiring as follows:
   a. Connect the Y-adapter harness (323879) to the main controller board at TFAN (top left-hand corner of the board).
   b. Route the fan harnesses (323872) and connect them to the Y-adapter harness.

Figure 27
Example of fan assemblies installed on enclosure

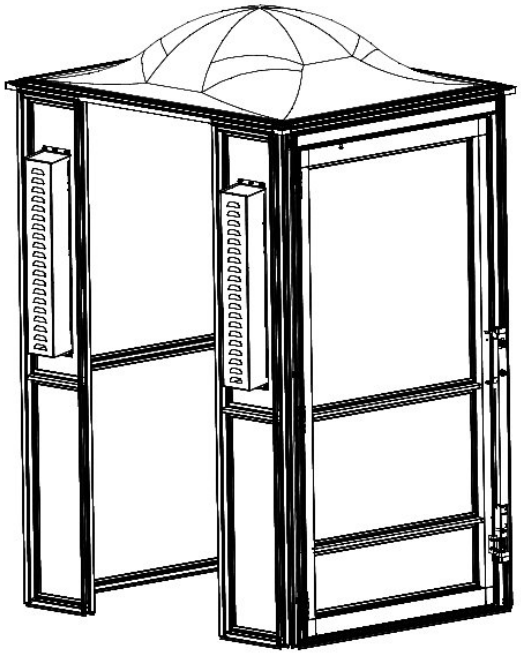

Appendix A: Cleaning

CLEANING - Metal Surfaces

DANGER

Under no circumstances should you ever attempt to remove panels for cleaning!

NOTE

DO NOT use any cleaning product anywhere on the entire unit that contain any amount of citrus, ammonia or petroleum. This includes Windex ® and most traditional glass cleaners, as well as many "natural" cleaning solutions.

NOTE

DO NOT use window cleaning sprays, kitchen scouring compounds or solvents such as acetone, gasoline, benzene, alcohol, carbon tetrachloride, or lacquer thinner. These can scratch the finish of the metal and damage nearby acrylic panels.

Washing (Metal Surfaces)

Clean the Metal Surfaces with a mild soap and water solution using a new microfiber cloth or with a melamine sponge such as a Mr. Clean Magic Eraser with water. Use a clean soft cloth, applying only light pressure. Rinse with clean water and dry by blotting with a damp cloth or chamois.

Not using harsh chemicals will preserve not only the look and texture of the powder coated metal, but also protect the acrylic sheets.

The fumes from many chemical cleaners (including citrus-based cleaners) will cause the acrylic to have surface cracks or create cracks that can go all the way through and can result in safety hazards.

Dusting (Metal Surfaces)

Dust the painted surfaces with a soft, damp microfiber cloth or chamois. Dry, gritty or previously used cloths may cause surface scratches.

CLEANING - Acrylic Panels

DANGER

Under no circumstances should you ever attempt to remove panels for cleaning!

NOTE

DO NOT use any cleaning product anywhere on the entire unit that contain any amount of citrus, ammonia or petroleum. This includes Windex ® and most traditional glass cleaners, as well as many "Natural" cleaning solutions.

NOTE

DO NOT use window cleaning sprays, kitchen scouring compounds or solvents such as acetone, gasoline, benzene, alcohol, carbon tetrachloride, or lacquer thinner. These can scratch the sheet's surface and/or weaken the sheet causing small surface cracks called "crazing".

Washing (Acrylic Panels)

Wash the acrylic panels with a microfiber cloth damp with water or with acrylic cleaner (see the list on the next page). Some precautions must be taken to ensure a long operating life and to maintain the acrylic panel clarity on your unit, including not using chemicals to clean the acrylic sheets. Use a clean soft cloth, applying only light pressure. Rinse with clean water and dry by blotting with a damp cloth or chamois.

Dusting (Acrylic Panels)

Dust acrylic panels with a soft, damp cloth or chamois. Dry or gritty cloths may cause surface scratches and create a static electric charge on the surface (refer to the section on Neutralizing Static Electricity on the next page).

Polishing (Acrylic Panels)

Protect the acrylic panels and maintain their surface gloss by occasional polishing with a good plastic cleaner and polish (refer to the section on Cleaners for a list of acceptable cleaners and polishes).

Apply a thin, even coat with a soft clean cloth and polish slightly with cotton flannel or a microfiber towel. Then wipe with a damp cloth to help eliminate electrostatic charges that can attract dust particles.

Neutralizing Static Electricity (Acrylic Panels)

NOTE A de-ionizing tool can be used during installation to eliminate a majority of the static electricity (causes the dust to fall away).

NOTE Damage caused by inappropriate cleaners and techniques is not covered under warranty.

A static electrical charge can develop on the acrylic panels during handling and processing. This is not unique to the acrylic panels, but is common to many materials, particularly plastics.

When the paper or film masking is stripped off the acrylic sheet, a static charge is created on the sheet surface. Static electricity attracts dust, chips, etc. floating in the air or on nearby work surfaces and holds these contaminants tightly to the surface. A compressed air gun will remove some of this surface dirt, but much of it continues to cling to the sheet.

Several anti-static cleaners for plastics are also available which will reduce static electricity and dust attraction. Wiping with a soft damp cloth or chamois is all that is necessary to keep the acrylic panels dust-free between applications of these cleaners.

Cleaners

Cleaners which ***MAY BE USED*** for acrylic panels:

- Plexus® (Anti-Static Cleaner)
- Novus® #1, 2, and 3 Acrylic Cleaner and Polish
- ATM Mirage Glass and Acrylic Cleaner
- Zep® Commercial Glass Cleaner (must state for use on Plexiglas®)
- Plexi-Clean (Anti-Static Cleaner)
- Prist Aerospace Anti-Static Acrylic, Plastic & Glass Cleaner
- Cleaners which explicitly state “Safe for use with plastics and acrylic”

Cleaners which ***SHALL NEVER BE USED*** for acrylic panels:

- Windex® Glass Cleaner
- Sprayway Ammonia-Free Glass Cleaner
- Goo-Gone®
- Natural 100% Citrus Solvent De-greaser
- Any citrus-based cleaners.

These above lists are for reference only and are not comprehensive. If you have any questions about the acceptability of a specific cleaner, please contact your authorized dealer.

Multilift
Vertical Platform Lift

ENCLOSURE
INSTALLATION GUIDE

Part No. 000921
© Copyright 2023

Savaria Concord Lifts, Inc.
www.savaria.com

Support
2 Walker Drive
Brampton, Ontario, L6T 5E1, Canada
Toll free: (800) 791-7999
Fax: (905) 791-2222

savaria®