Stiltz™ Homelifts



INSTALLATION GUIDELINES

Trio+ TrioAlta

Health and Safety:

All installation and maintenance work must be carried out by an Authorized Stiltz Dealer or service technician.

If you have any questions not covered in this document, then please contact your Authorised Stiltz Dealer or contact Stiltz directly. Our contact information is outlined at the end of these guidelines.

The following health and safety risks should be considered when installing and maintaining a Stiltz homelift.

Manual Handling



Prevent back injury.
Bend knees to lift.

Falling Hazards



Work at a safe distance.
Use barricades.

Falling Object Risk



Workers overhead.
Watch out for falling objects.

Trip Hazard



Watch your step.

Electrical Hazard



Risk of direct or indirect electrical contact.

Pinch Point



Keep hands clear of moving parts which can cause crushing injury.

It is highly recommended that each installer utilises the following personal protective equipment where required.

Eye Protection



Ear Protection



Hand Protection



Foot Protection



Disclaimer:

Please note that;

(a) This document is designed to be used as a guide only. You should seek independent engineering or construction advice to determine that the desired and/or proposed alterations to a home are suitable to the specific existing structure.

(b) All building/construction work must be carried out by a licensed contractor where required by code or law.

Installation Guidelines

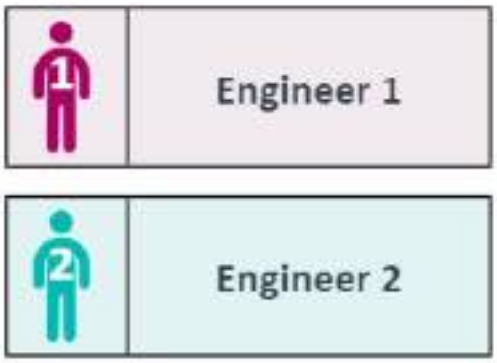

Table of Contents

SECTION 1
Tools 6

SECTION 2
Unboxing and Parts 9

SECTION 3
Rail Preparation..... 33

SECTION 4
Hoist Preparation 49

SECTION 5
Car Preparation 65

SECTION 6
Electrical/ Mechanical Connections 91

SECTION 7
Finishing Up Electro/Mechanical 117

Section 1: Tools

Supplied with Installation Kit (sold separately)

50104-00038
Remote Pendant



10602-00035
Safety Pan Bridge Lead



55102-00058
Installation Sling Set

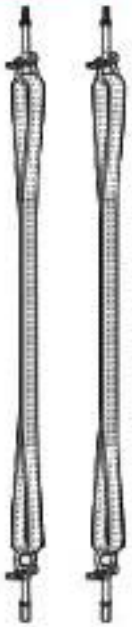

30107-00003
Open End Spanner 36mm



30113-00048
T Type Allen Key 4mm



Shipped in the car crate

SECTION 1: Tools

Tools required

Loctite	Adjustable Wrench	Spirit Level	Pop Rivet Gun
			

Cross Screwdriver	Flat Screwdriver	Socket Wrench + Sockets	Socket Wrench Extension
			

Nut Drivers	Spanners	Pliers	Stanley Knife
			

Scissors	Spray Lubricant	Electrical Multi Meter	De-Burr Tool
			

Steps	PH2 + PH3 Bits	Angle Grinder	Stud Finder
	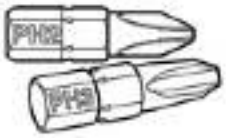		

Section 1: Tools

Laser Line	Long Nose Pliers	Rivet Nut Gun	Tape Measure
			

Power Drill	Drill Bits	Countersink Bit	6 ' Ladder
			

Mole Grips	Marker Pen	Chop Saw	Allen Keys (Metric)
x2 		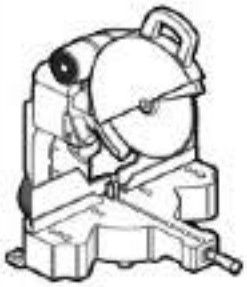	

Brush and Dustpan	Vacuum Cleaner
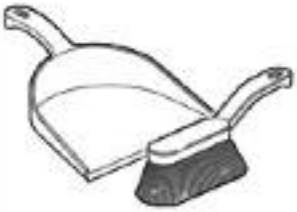	

Stiltz™ Homelifts

SECTION 2
Unboxing and Parts

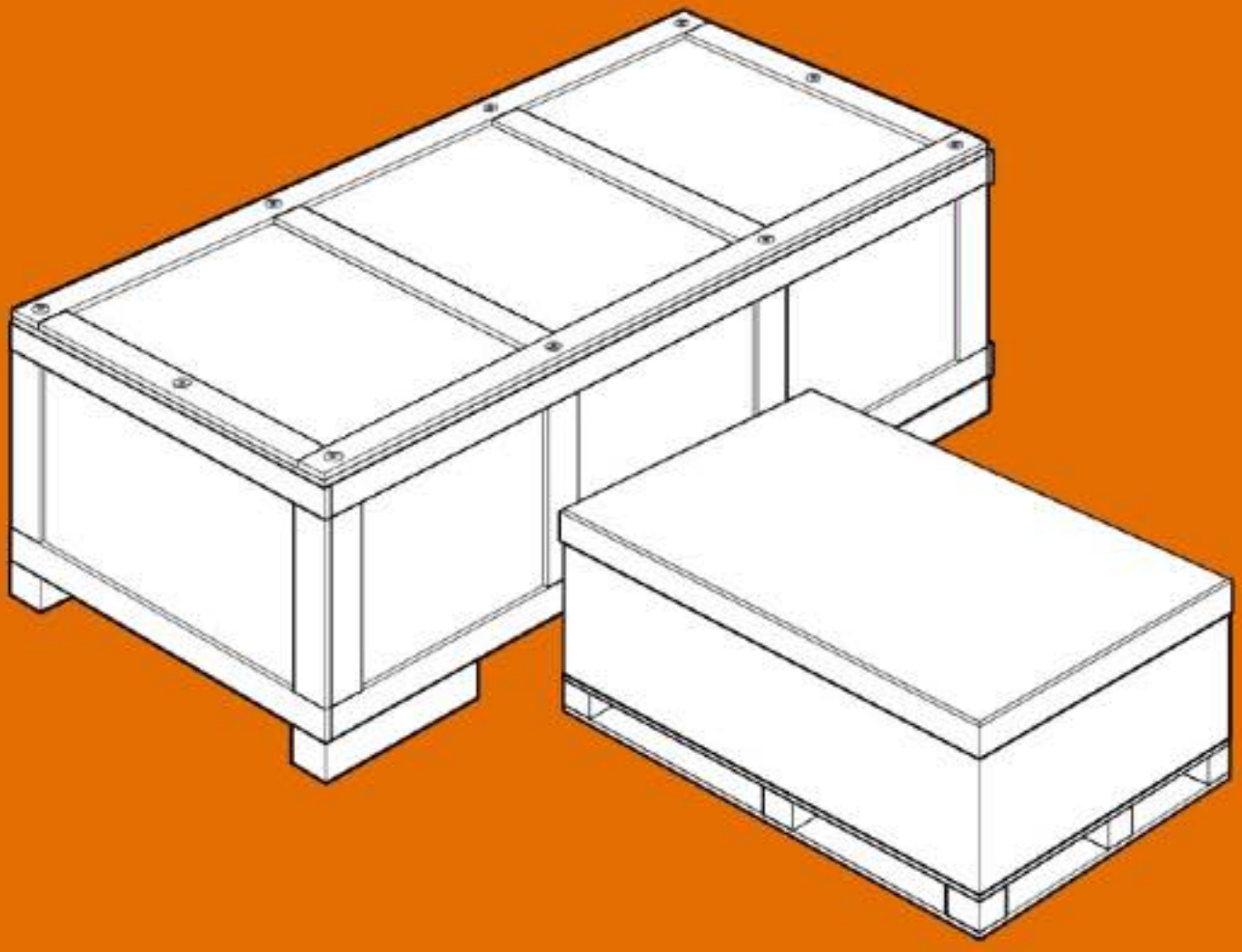

INSTALLATION GUIDELINES

Section 2: Unboxing and Parts

FULL STILTZ SHIPMENT (2 CRATES)

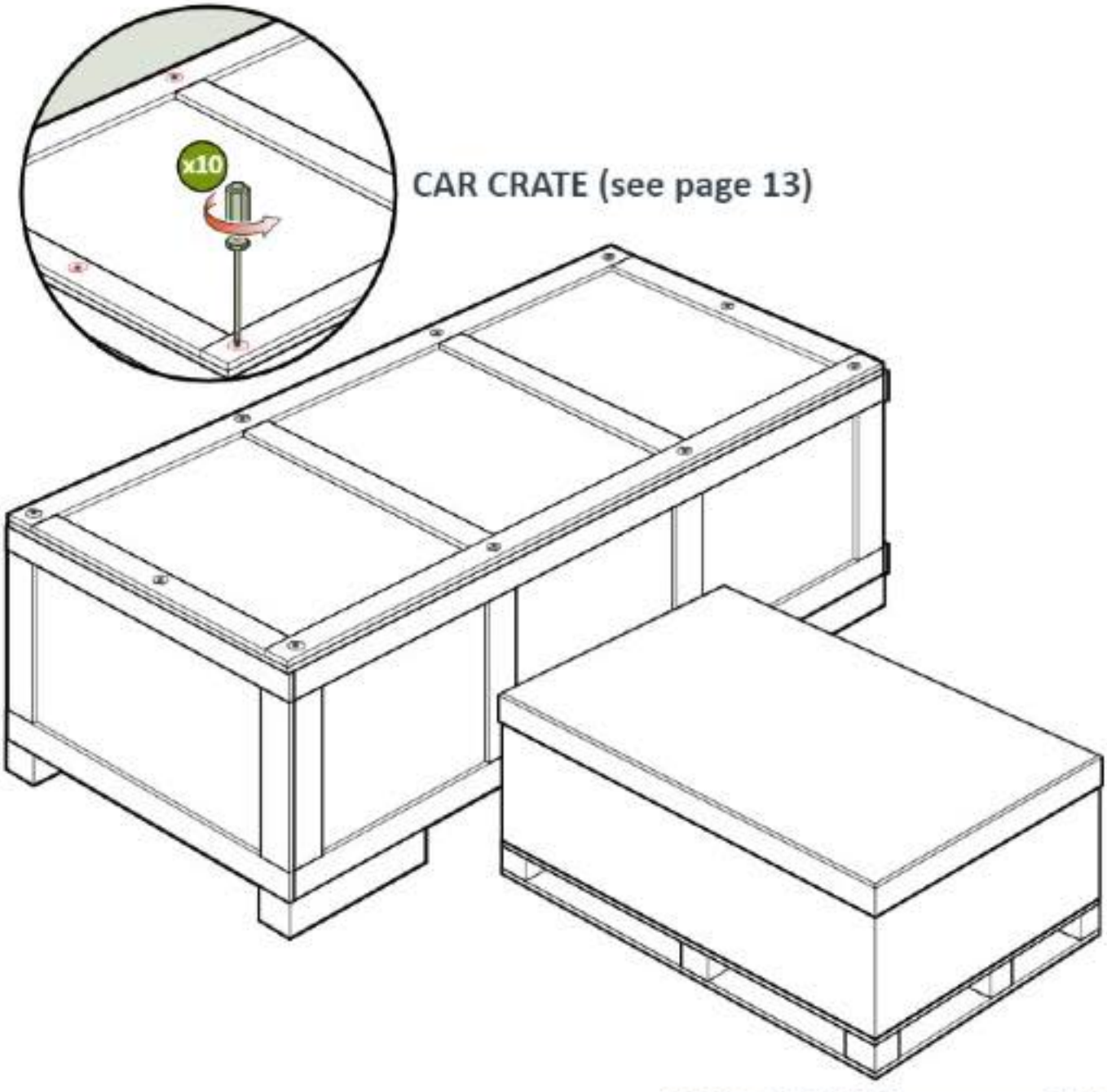

HOIST CRATE

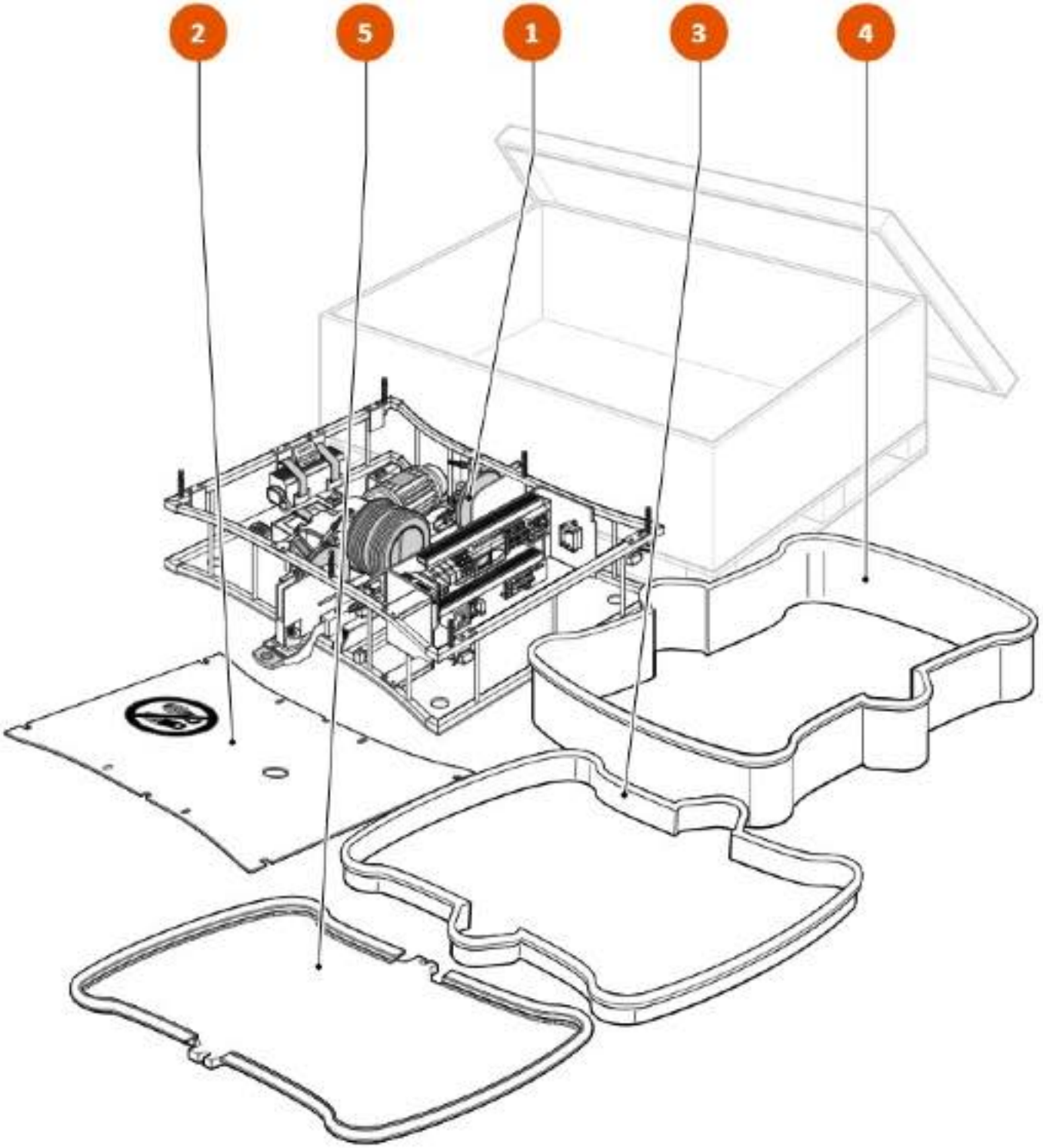

Section 2: Unboxing and Parts

HOIST CRATE

1 LT Lift Hoist

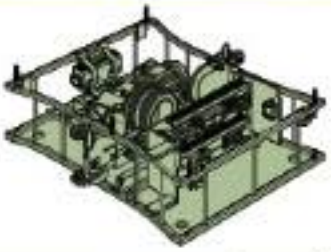

x1	P/N: LTU-1C0BN5N-001	USA	
	P/N: LTU-1C0BN5N-008	ROW	
	P/N: LTU-1C0BN5N-009	GER	
	P/N: LTE-1C0BN5N-001	ROW	EN81
	P/N: LTE-1C0BN5N-004	GER	EN81
	P/N: LTU-1C0BN5N-006	USA	ASME

2 LT Motor Cover Plate 4.5m



x1	P/N: 50102-00134

Insert Assembly & LD Shaft Lid

P/N: 53102-00347 STD
P/N: 53102-00348 EN81
P/N: 53102-00348 ASME

3 LT Floor Insert Flange

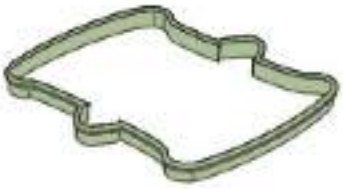

x1	P/N: 35108-00029

4 LT Floor Insert

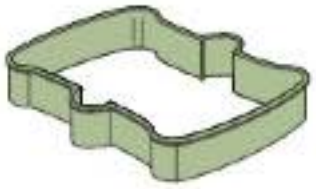

x1	P/N: 35108-00028

5 LT Shaft Lid Assembly



x1	P/N: 53102-00207	STD
	P/N: 53102-00446	EN81
	P/N: 53102-00446	ASME

CAR CRATE

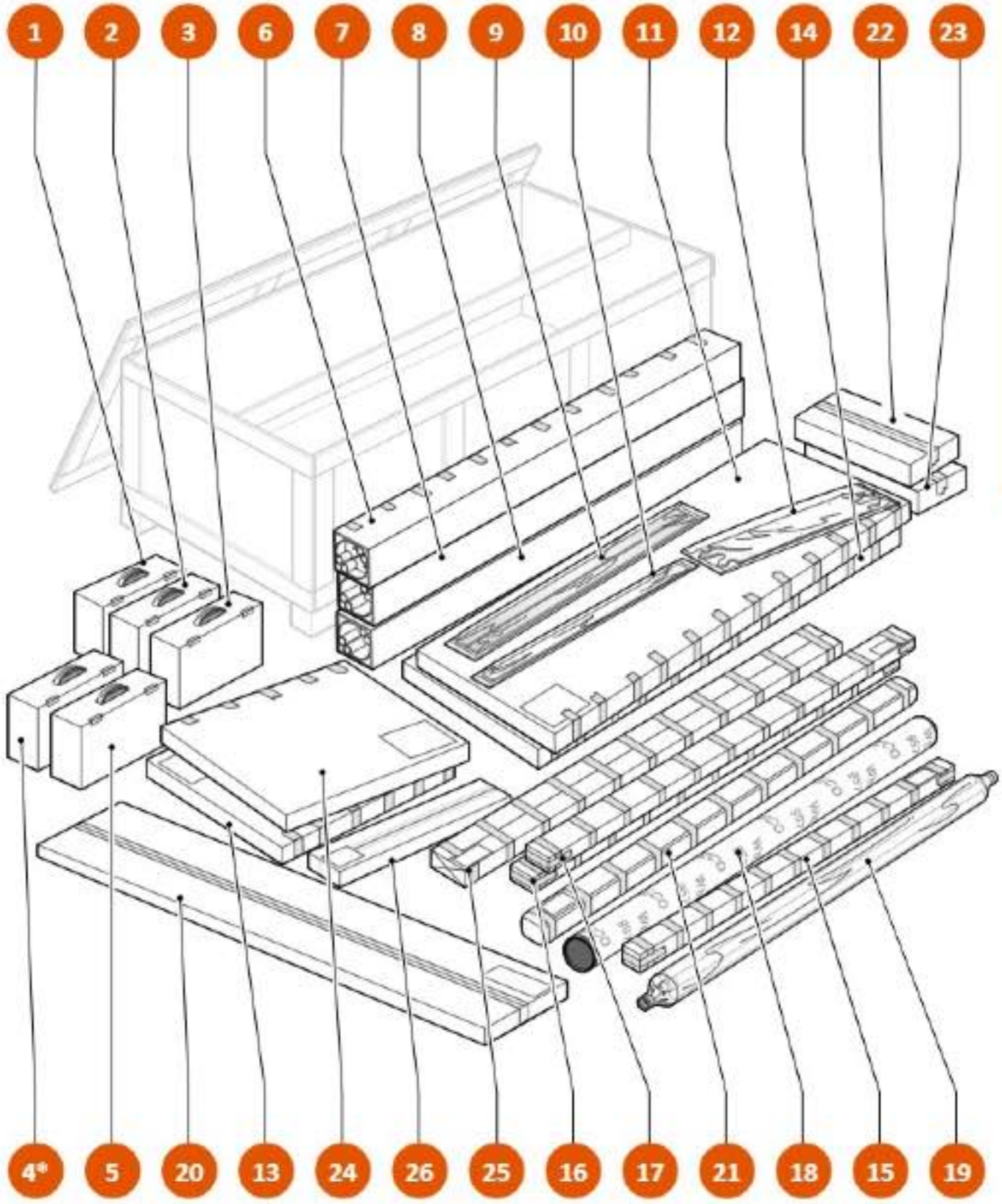

*Now packed in holst crate

Where parts are outlined with black border this denotes they are packed together.

Section 2: Unboxing and Parts



LT Door Box

P/N: 53102-00351 STD
P/N: 53102-00351 EN81
P/N: 53102-00372 ASME

LD Door Lock		
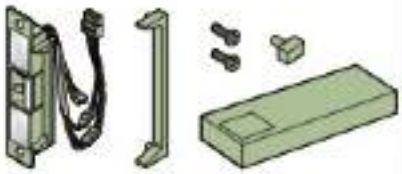		
x1	P/N: 53104-00048	STD
	P/N: 53104-00048	EN81
	P/N: 53104-00033	ASME

Door Lock Cable		
		
x1	P/N: 53104-00031	

LT Door Accessory Kit

P/N: 53102-00102

Hinges Right Handed		
		
x1	P/N: 30113-00188	

Hinges Left Handed		
		
x1	P/N: 30113-00187	

Hinge Fixing Screws		
		
x15	P/N: 30101-80119	

3mm Hinge Shims		
		
x4	P/N: 35112-00089	

5mm Hinge Shims		
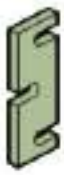		
x2	P/N: 35112-00090	

1mm Hinge Shims		
		
x4	P/N: 35112-00091	

0.5mm Hinge Shims		
		
x4	P/N: 35112-00092	

LT Rear Door Accessory Kit

P/N: 53102-00217

Hinges Right Handed		Hinges Left Handed		Hinge Fixing Screws		3mm Hinge Shims	
x2 		x2 					
x1	P/N: 30113-00188	x1	P/N: 30113-00187	x24	P/N: 30101-80119	x4	P/N: 35112-00089

1mm Hinge Shims		0.5mm Hinge Shims	
			
x16	P/N: 35112-00091	x4	P/N: 35112-00092

Section 2: Unboxing and Parts



LT Car Frame Box

P/N: 53102-00352

Cat5 Cable Blue 3m		Cat5 Cable Green 2m		Cat5 Cable Yellow 2m		Car Foot LED Cable Assy	
							
x1	P/N: 10602-00001	x1	P/N: 10602-00026	x1	P/N: 10602-00003	x2	P/N: 53104-00050

Car Minor Parts

P/N: 53102-00234

Hoist Screws		Internal Corner Mitre Screws		Side Channel Cap Screws		Electrical Cover Pins	
x4 M8 x 60mm x4 M6 x 60mm x4 M6 x 40mm		x5 		x4 		x4 	
x1	P/N: 50102-00104	x4	P/N: 53102-00271	x2	P/N: 53102-00108	x2	P/N: 53102-00107

Front Stile Cap Screws		Release Key	
x16  x16 			
x1	P/N: 53104-00229	x1	P/N: 30113-00203

3 LD Car Box 2

P/N: 53102-00262 ROW
P/N: 53102-00459 GER
P/N: 53102-00589 USA

Universal CDP Assembly



x1	P/N: 53104-00047	GER
	P/N: 53104-00089	ROW
	P/N: 53104-00089	USA

LD Phone Case N106



x1	P/N: 53102-00093

USB Phone Charger



x1	P/N: 53104-00025

Phone Charging Cable



x1	P/N: 53104-00052

Bottom Guido Rollers



x1	P/N: 53102-00117

Philips E517A Phone



x1	P/N: 10461-00006

Section 2: Unboxing and Parts



LT Hoist Parts Box

P/N: 50102-00177	ROW	STD
P/N: 50102-00172	ROW	EN81
P/N: 50102-00113	USA	STD
P/N: 50102-00175	USA	ASME
P/N: 50102-00176	GER	STD
P/N: 50102-00173	GER	EN81

Guide Roller Assembly



x1	P/N: 53102-00020

Motor Cover Screws

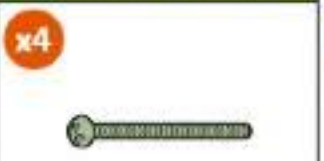

x1	P/N: 50102-00046

Wall Mounted Remote Holder



x1	P/N: 50102-00140

Spring Set

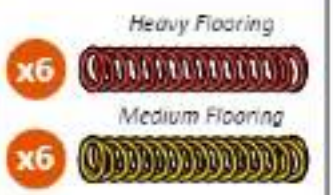

x1	P/N: 50102-00045

Cable Bush Ø16mm



x1	P/N: 10908-00001

Anti Tamper Kit

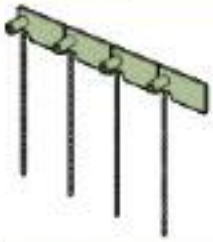

x1	P/N: 50102-00132

Remote Controller



x1	P/N: 50104-00166	ROW
	P/N: 50104-00167	GER
	P/N: 50104-00062	USA

Shaft Lid Lock Bar Kit



x1	P/N: 53102-00355	ROW	EN81
x1	P/N: 53102-00355	GER	EN81

HZ Door Contact Switch Kit



x1	P/N: 53104-00070	USA	ASME
	P/N: 53102-00066	GER	EN81
	P/N: 53102-00066	ROW	EN81

5 LT Rail Box

P/N: 55102-00021

Gripper Rod Extension (Short)	Gripper Rod End Bracket	Loctite 263 (10ml)	Guide Base Plate Fixings
x2 	x2 		x4 
x1 P/N: 55102-00005	x1 PP/N: 55102-00026	x1 P/N: 55102-00027	x1 P/N: 55102-00028

Spacer Board Screws	Bugle Screws	Hole Plugs	Guide Rail Joining Kit
x6 	x4 	x63 	x4 x4 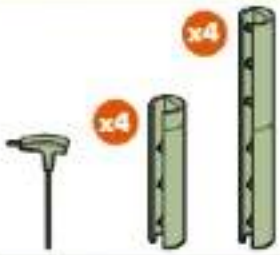
x1 P/N: 55102-00029	x1 P/N: 55102-00030	x1 P/N: 55102-00022	x1 P/N: 55102-00024

Guide Base Plates	Magnetic Limit Blades	Guide Rail Base Covers	Gripper Rods Clamping Sleeves
x2 	x2 		x2 
x1 P/N: 55102-00025	x1 P/N: 55102-00018	x2 P/N: 20101-00036	x1 P/N: 55102-00023

Section 2: Unboxing and Parts



Guide Top Rails

P/N: 55102-00013

Top Rails		
x2 		
x1	P/N: 55102-00013	

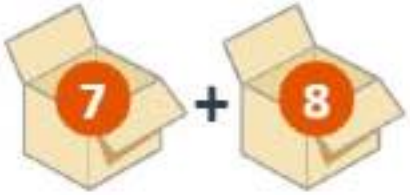

Guide Uni Rails

P/N: 55102-00039 ROW & GER

P/N: 55102-00101 USA

Guide Uni Rails		
x4 ROW & GER x3 USA 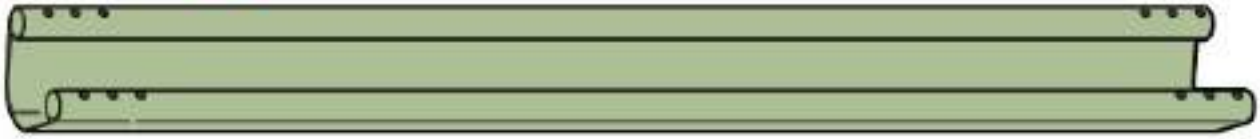		
x1	P/N: 55102-00039	ROW & GER
	P/N: 55102-00101	USA



LT Rear Door Cover Strips

P/N: 53102-00228

LT Hinge Cover Strip 1520	
	
x2	P/N: 25104-40105

LT Hinge Cover Strip 236	
	
x2	P/N: 25104-40106

LT Hinge Cover Strip 187	
	
x2	P/N: 25104-40107

P/N: 53102-00562

LT Lock Cover Strip 1404	
	
x1	P/N: 25104-40101

LT Hinge Cover Strip 1176	
	
x1	P/N: 25104-40102

LT Hinge Cover Strip 286	
	
x1	P/N: 25104-40104

LT Lock Cover Strip 516	
	
x1	P/N: 25104-40100

LT Hinge Cover Strip 481	
	
x1	P/N: 25104-40103

LT Hinge Cover Strip 152	
	
x2	P/N: 25104-40165

Section 2: Unboxing and Parts



LT Corner Trim Kit

P/N: 53102-00557

Corner Trim 1.2m		LED Cover	
			
x4	P/N: 20102-00022	x4	P/N: 20102-00024

Corner Trim 0.61m		LED Diffuser	
			
x4	P/N: 20102-00025	x4	P/N: 20102-00023



LT Half Door

P/N: 53102-00215

Half Door		
		
x1	P/N: 53102-00215	



LT Top Guide Spacer

P/N: 28103-00003

Top Guide Spacer		
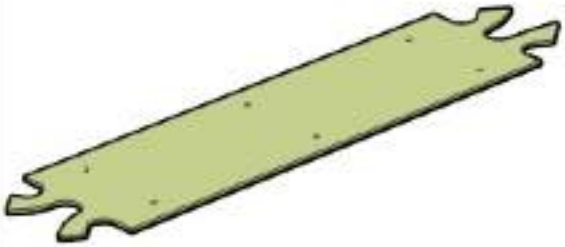		
x1	P/N: 28103-00003	

13 Ceiling Panel / Celing Hoop

P/N: 53102-00369/ 53102-00368

Ceiling Panel		Ceiling Hoop	
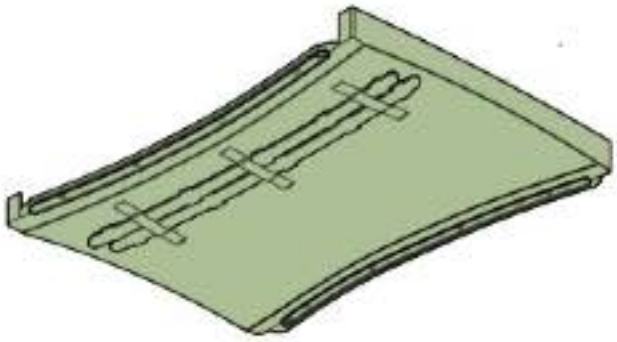		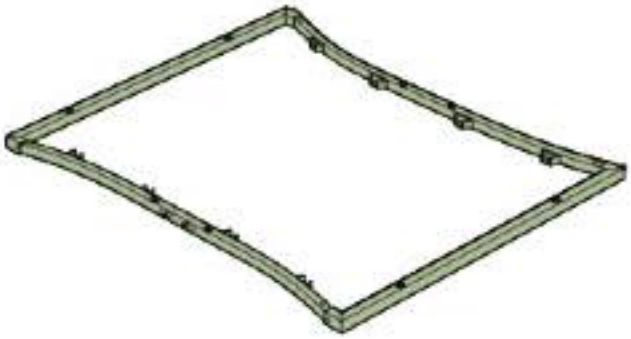	
x1	P/N: 53102-00369	x1	P/N: 53102-00368

14 LT Rear Panel

P/N: 53102-00216

Rear Panel	
	
x1	P/N: 53102-00216

Section 2: Unboxing and Parts

15 LT Internal Mitres

P/N: 25104-40114/25104-40088

LT Internal Corner Inner RH	
	
x2	P/N: 25104-40114

LT Internal Corner Inner LH	
	
x2	P/N: 25104-40088

16 LT Corner Entry Stiles

P/N: 53102-00226/53102-00225

LT Entry Corner Stile Ext Front RH Rivet Assembly	
	
x1	P/N: 53102-00226

LT Entry Corner Stile Ext Front LH Rivet Assembly	
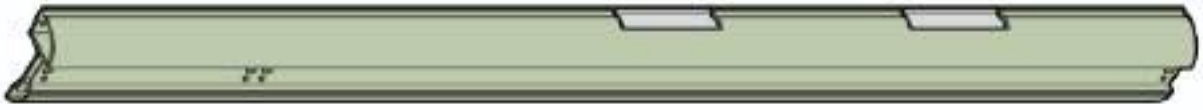	
x1	P/N: 53102-00225

17 LT Corner Entry Stiles

P/N: 53102-00226/53102-00225

LT Entry Corner Stile Ext Front RH Rivet Assembly	
	
x1	P/N: 53102-00226

LT Entry Corner Stile Ext Front LH Rivet Assembly	
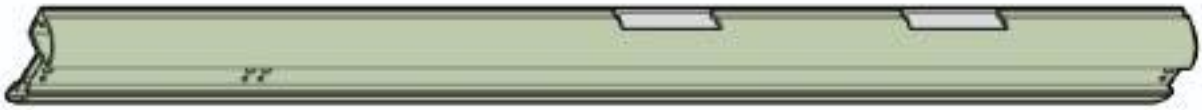	
x1	P/N: 53102-00225

18 LT Light Curtains

P/N: 53104-00109 STD
P/N: 53104-00109 EN81
P/N: 53104-00110 ASME

Light Curtains		
x2 		
x1	P/N: 53104-00109	STD
	P/N: 53104-00109	EN81
	P/N: 53104-00110	ASME

Light Curtain Cables		
		
x1	P/N: 10204-00039	STD
	P/N: 10204-00039	EN81
	P/N: 10204-00040	ASME

Light Curtain Cover Strips		
x2 		
x1	P/N: 20101-0073	STD
	P/N: 20101-0073	EN81
	P/N: 20101-0073	ASME

Section 2: Unboxing and Parts

19 Lift Gripper Rods Uni Assembly

P/N: 55102-00020

Lift Gripper Rod Universal 2.4m	
	
x2	P/N: 35111-00205

Lift Gripper Rods Uni with Stud Set	
	
x2	P/N: 35111-00036

20 LT Uni Entry Side Panel Front PC

P/N: 53102-00444

LT Uni Entry Side Panel Front PC	
	
x4	P/N: 53102-00444

21 LT Corner Covers P/N: 25104-40094/25104-40092/ 25104-40099/25104-40097/25104-40092/25104-40093

LT HD Entry Corner Stile Cover Ext Front RH Lock	
	
x1	P/N: 25104-40094

LT HD Entry Corner Stile Cover Ext Front LH Lock	
	
x1	P/N: 25104-40092

LT FD Entry Corner Stile Cover Ext Front RH Hinge	
	
x1	P/N: 25104-40099

LT FD Entry Corner Stile Cover Ext Front LH Hinge	
	
x1	P/N: 25104-40097

LT HD Entry Corner Stile Cover Ext Front RH Hinge	
	
x1	P/N: 25104-40095

LT HD Entry Corner Stile Cover Ext Front LH Hinge	
	
x1	P/N: 25104-40093

Section 2: Unboxing and Parts



LT Electrics Covers

P/N: 53102-00501 ROW & USA
P/N: 53102-00499 GER

Electrical Covers		
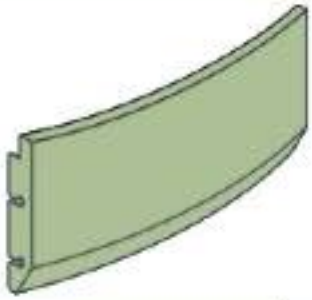		
x2	P/N: 53102-00501	ROW
	P/N: 53102-00501	USA
	P/N: 53102-00499	GER



LT Floor/Safety Pan

P/N: 53104-00075/ 53104-00072

Floor	
	
x1	P/N: 53104-00075

Safety Pan	
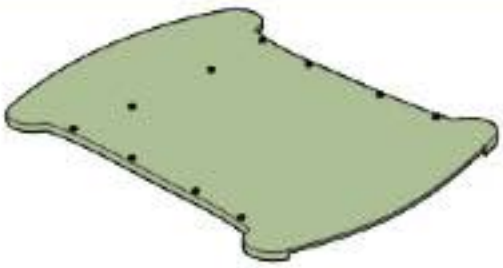	
x1	P/N: 53104-00072

25 LT Side Channels

P/N: 53102-00222/ 53102-00219

Extruded Side Channel Clamping RH Assembly	
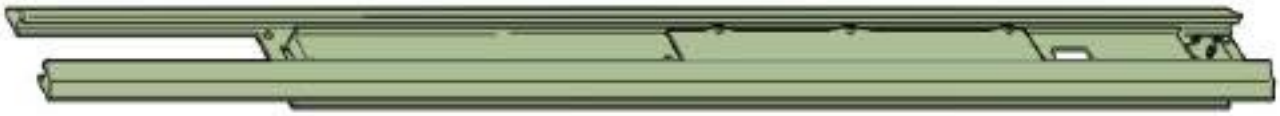	
x1	P/N: 53102-00222

COP Channel Clamping Assembly	
	
x1	P/N: 53102-00219

LT Side Channel Cover Strip With Cutout	
	
x1	P/N: 25104-40086

LT Side Channel Cover Strip Plain	
	
x1	P/N: 25104-40087s

Section 2: Unboxing and Parts

26 LT Handrail

P/N: 53102-00385

Handrail		LT COP Mounting Plate	
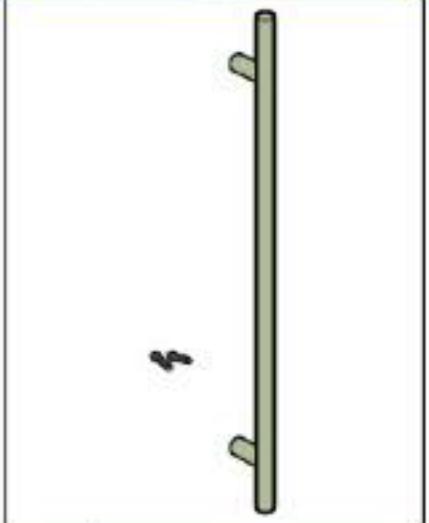			
x1	P/N: 53102-00385	x1	P/N: 35113-40040

27 OPTIONAL - LT Seat Assembly

P/N: 53102-00168

LT Seat Vinyl Assembly		LT Seat Fixings		LT Seat Bracket Fixings	
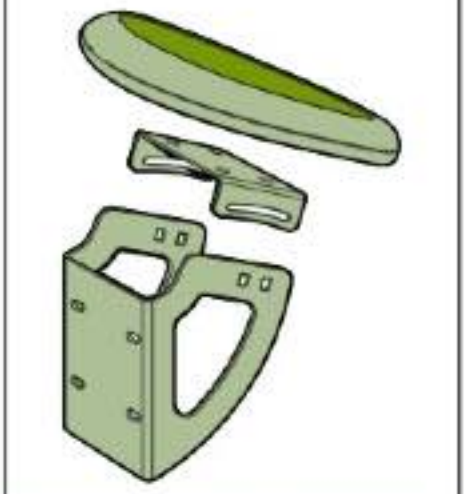		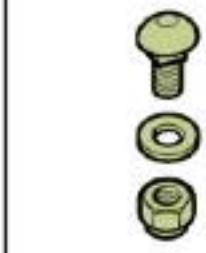			
x1	P/N: 28106-00062	x4	P/N: 53102-00265	x4	P/N: 53102-00266

Initial Measurements - Rail Cut Down

Stiltz

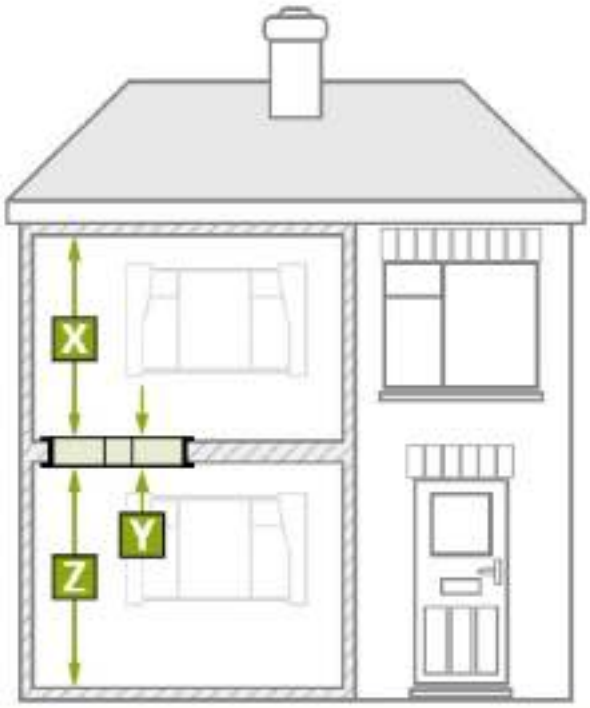

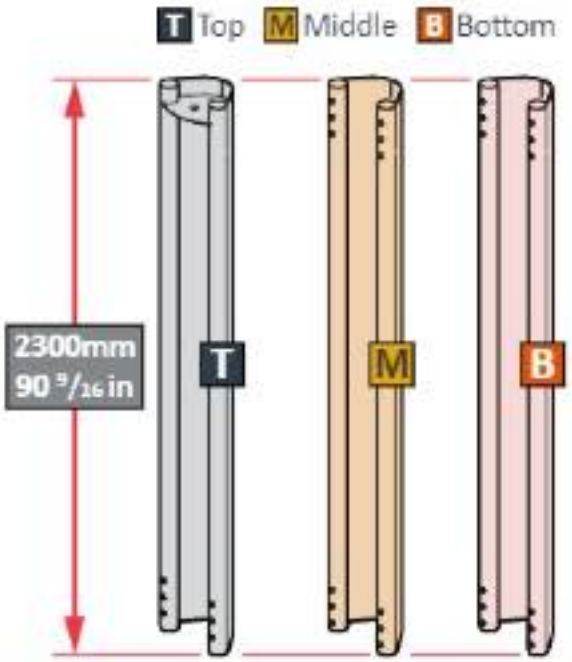

EXAMPLE:

X = 2,388mm (94 in)

Y = 381mm (15 in)

Z = 2,388mm (94 in)

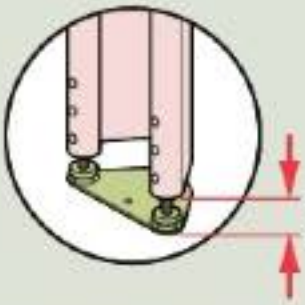

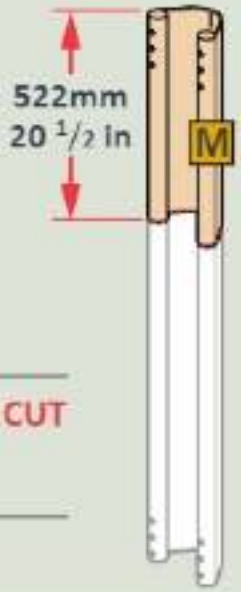

Total Rail Length (TRL) **X + Y + Z = 5,157mm (203 in)**

TRL 5,157mm - (**T** 2,300mm + **B** 2,300mm) - *35mm* = **CUT**

TRL 203 in - (**T** 90 9/16 in + **B** 90 9/16 in) - *1 3/8 in* = **CUT**

Therefore, the CUT M = 522mm (20 1/2 in)



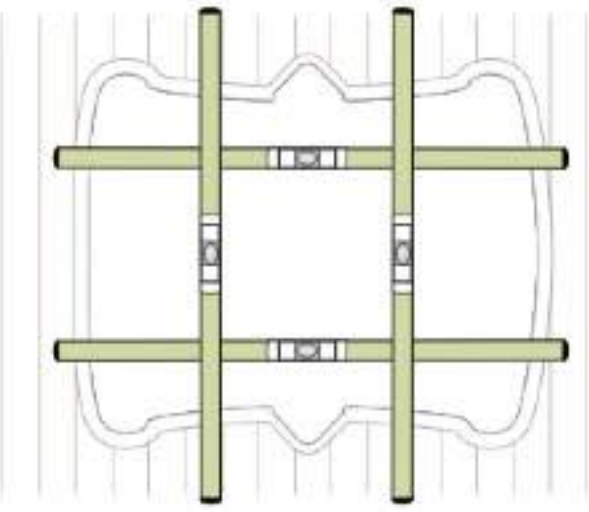

Installation Guidelines

Stiltz™ Homelifts

SECTION 3
Rail Preparation



INSTALLATION GUIDELINES

Section 3: Rail Preparation

Supplied with Installation Kit (sold separately)

30107-00003 Open End Spanner 36mm	30113-00048 T Type Allen Key 4mm
	

Tools required

Power Drill	Drill Bits	Countersink Bit	Tape Measure
	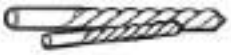		
Marker Pen	**Chop Saw**	**Loctite**	**Adjustable Wrench**
	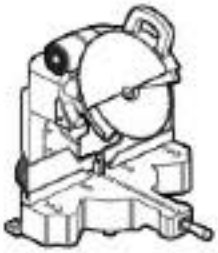		
Spirit Level	**Spanners**	**Stanley Knife**	**De-Burr Tool**
			

Steps	PH2 + PH3 Bits	Angle Grinder	Stud Finder
	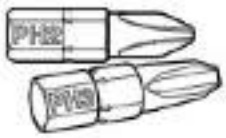		
Laser Line	**Long Nose Pliers**	**6' Ladder**	**Mole Grips**
			x2 

Section 3: Rail Preparation

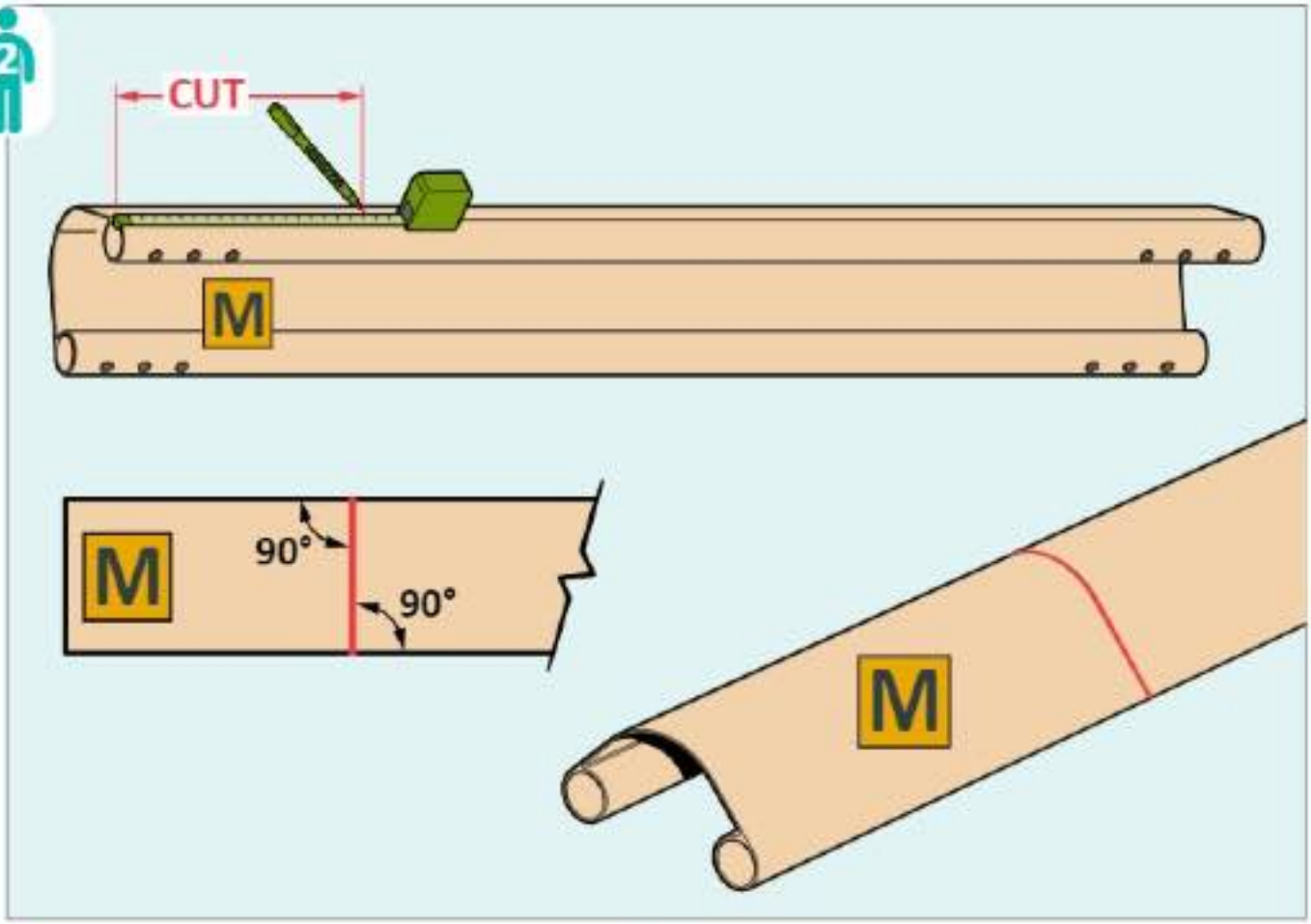

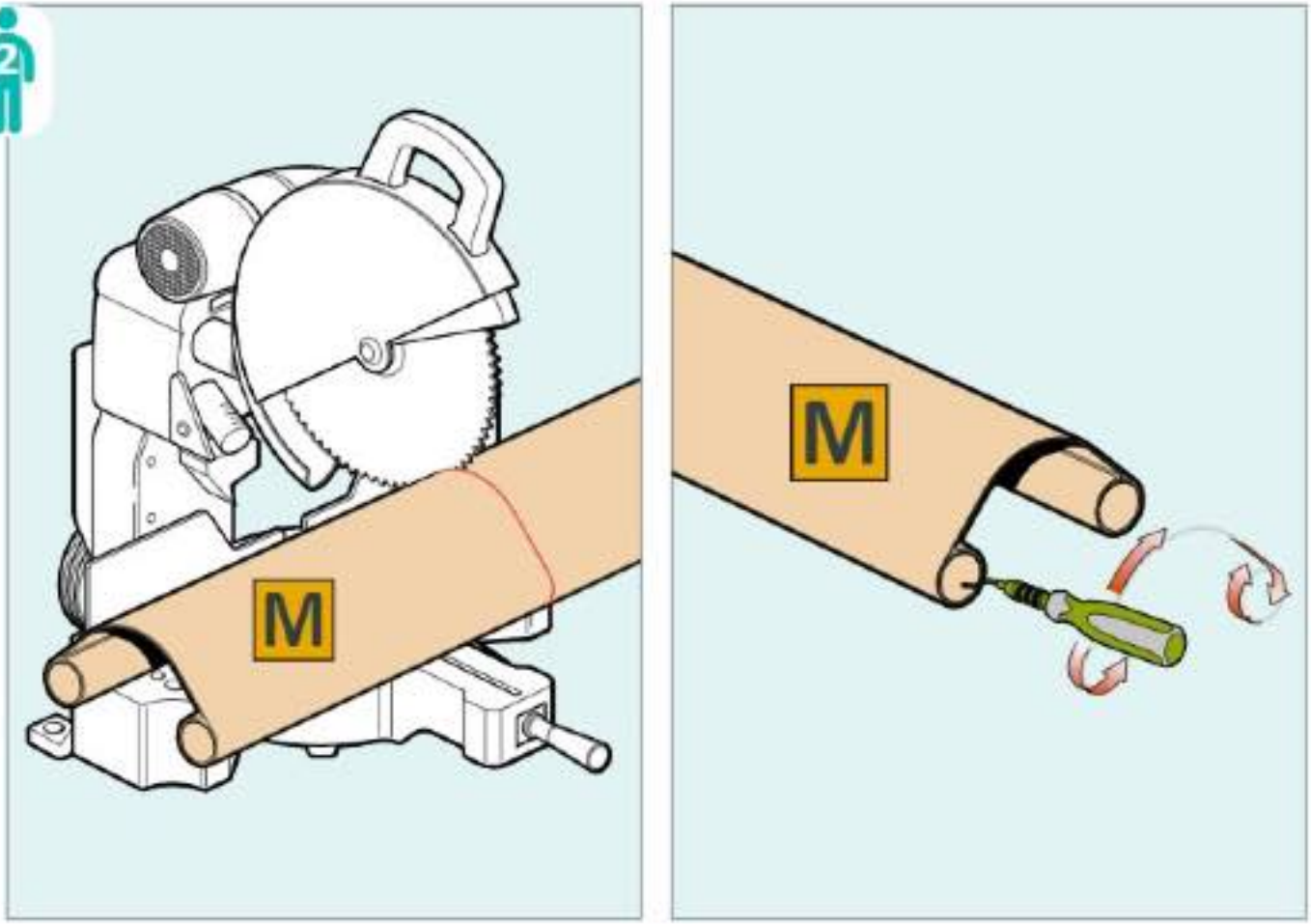

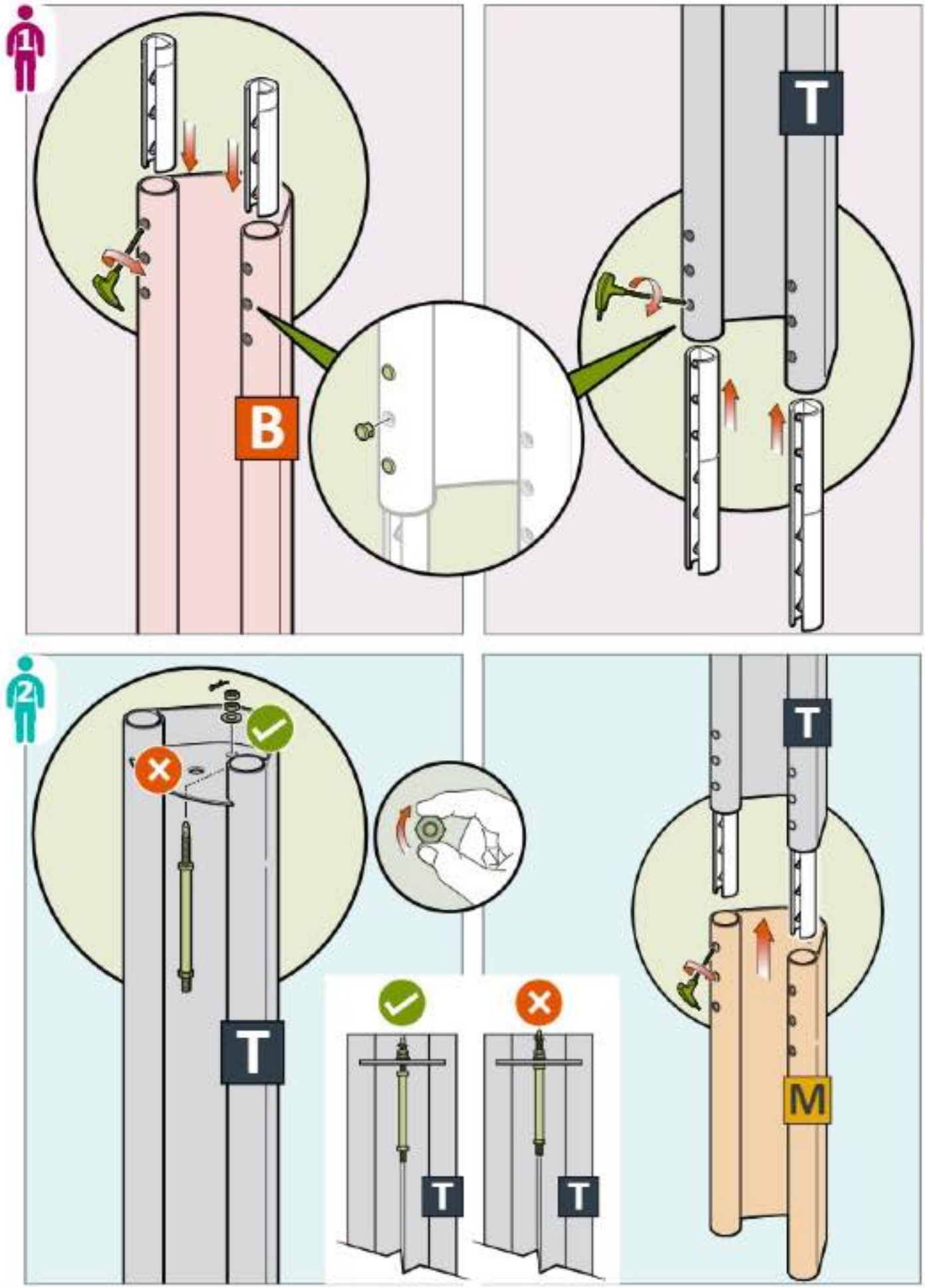
1
B
T
2
T
T
T
T
M

Section 3: Rail Preparation

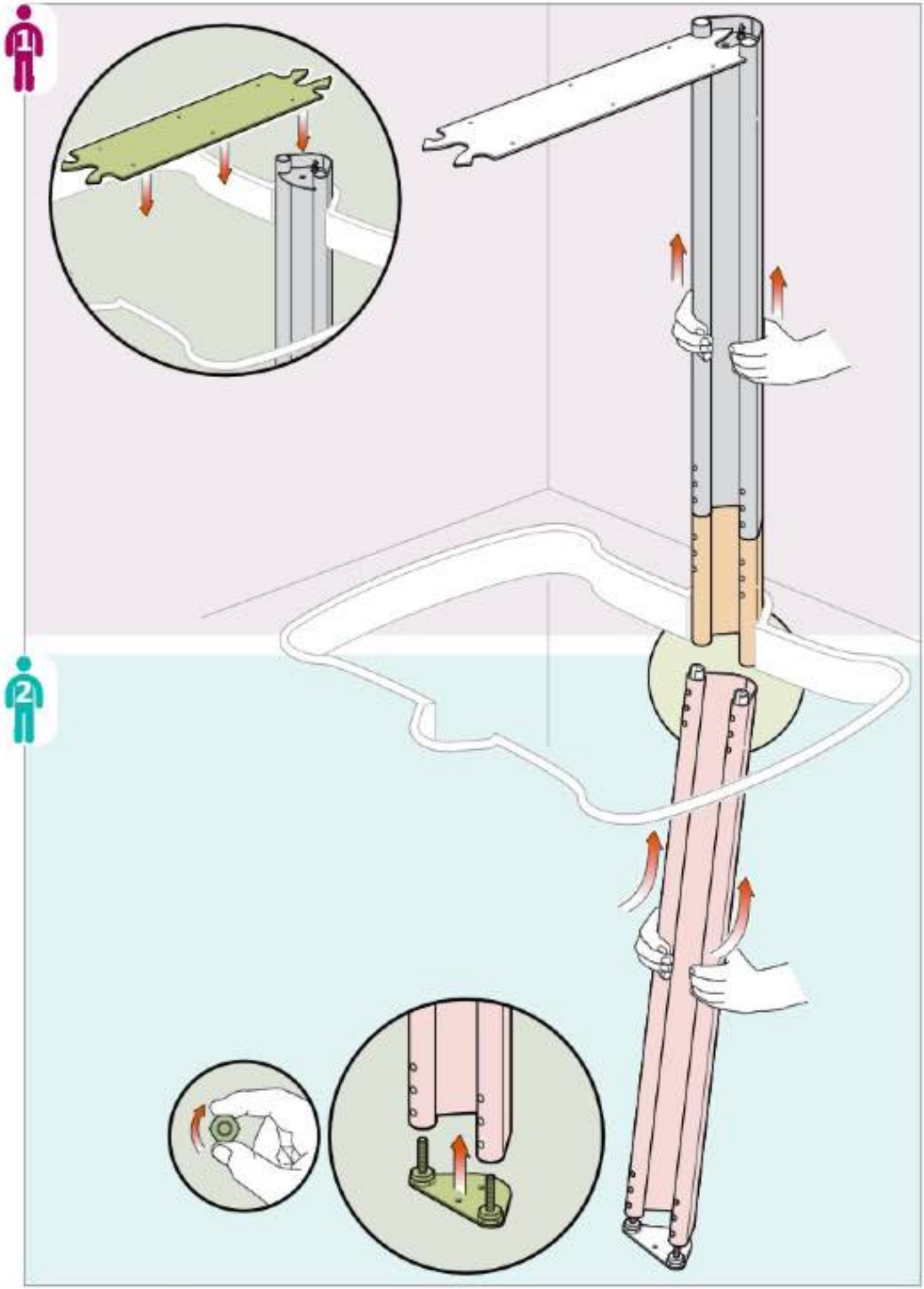

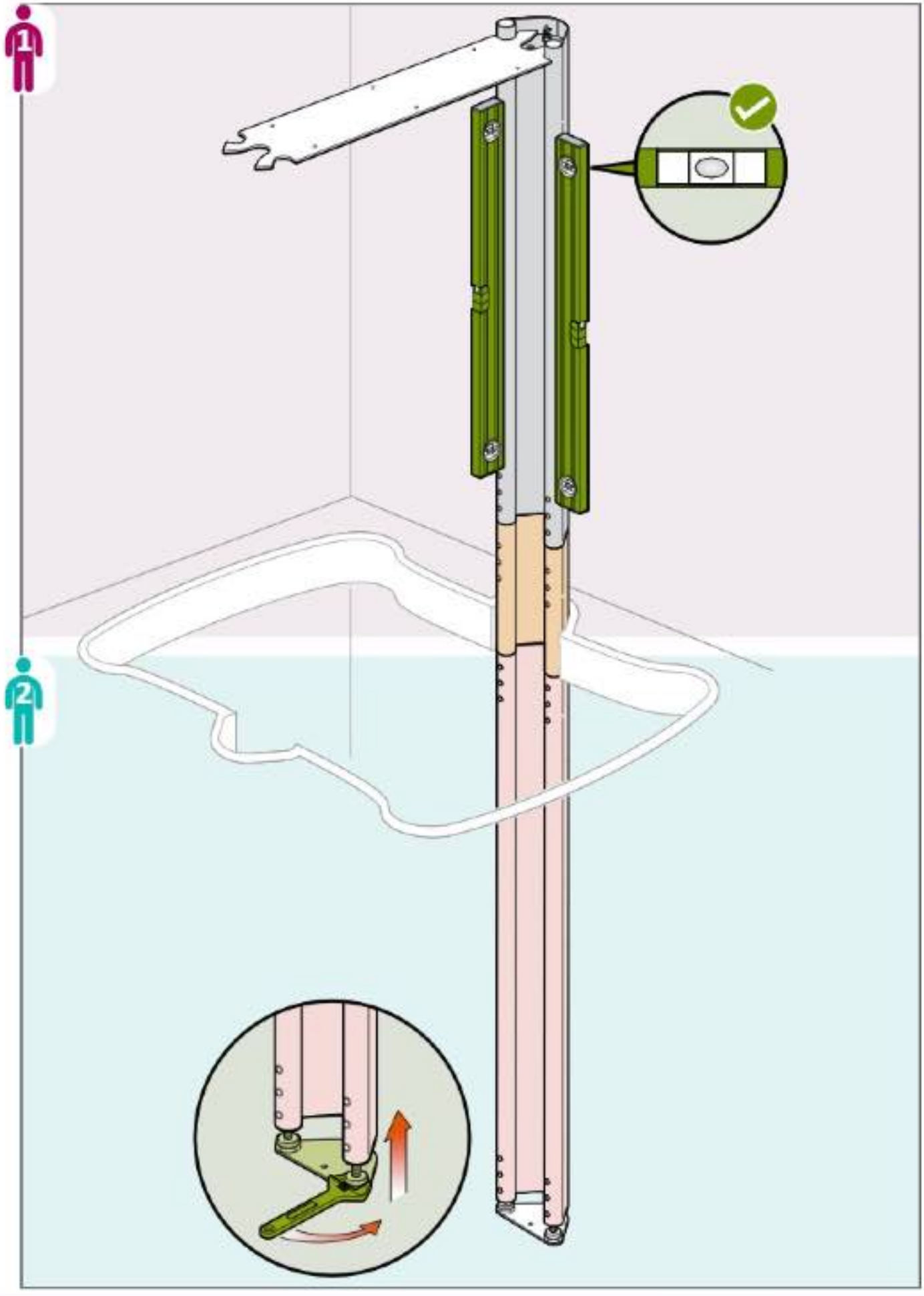
1
2

Section 3: Rail Preparation

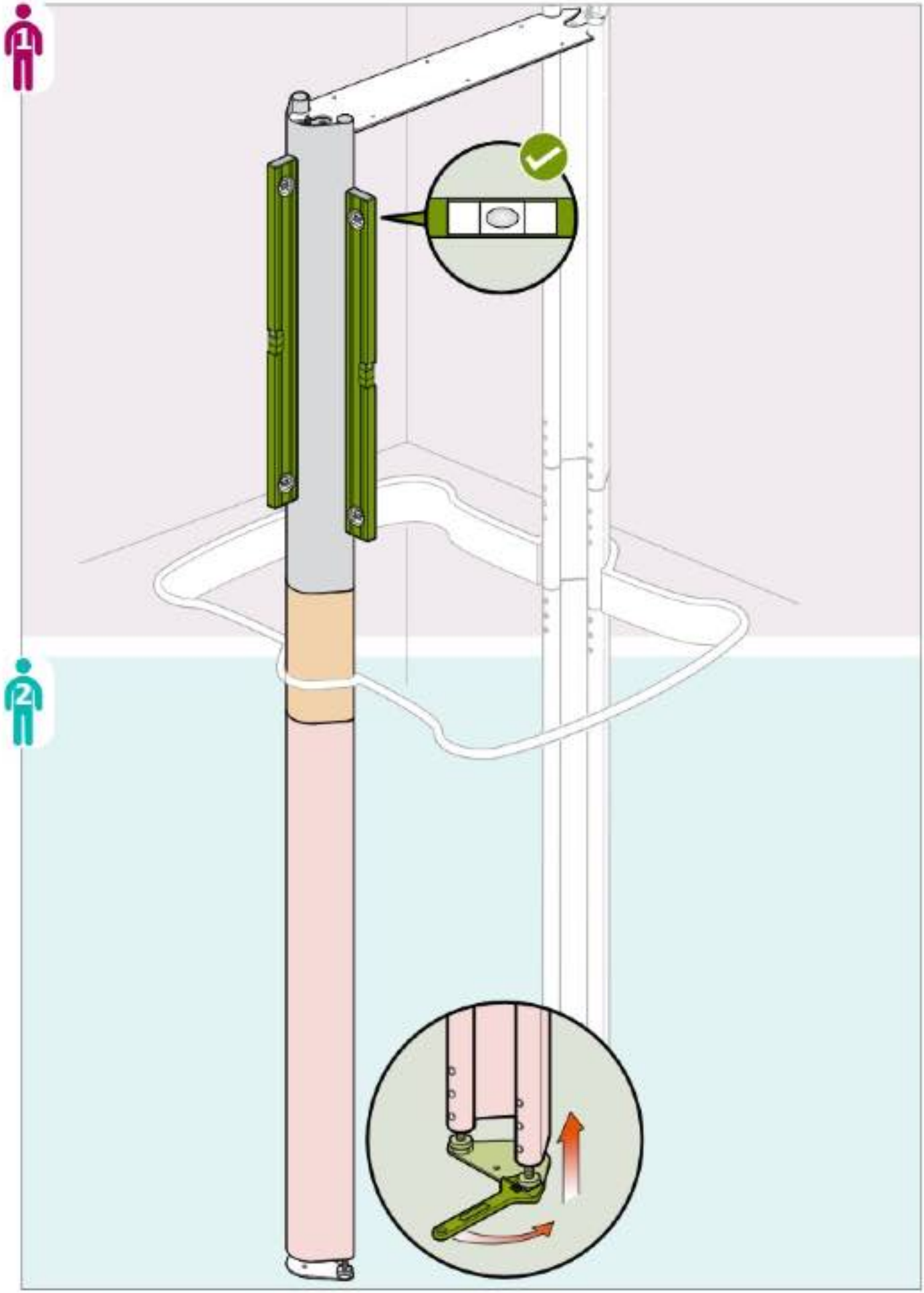

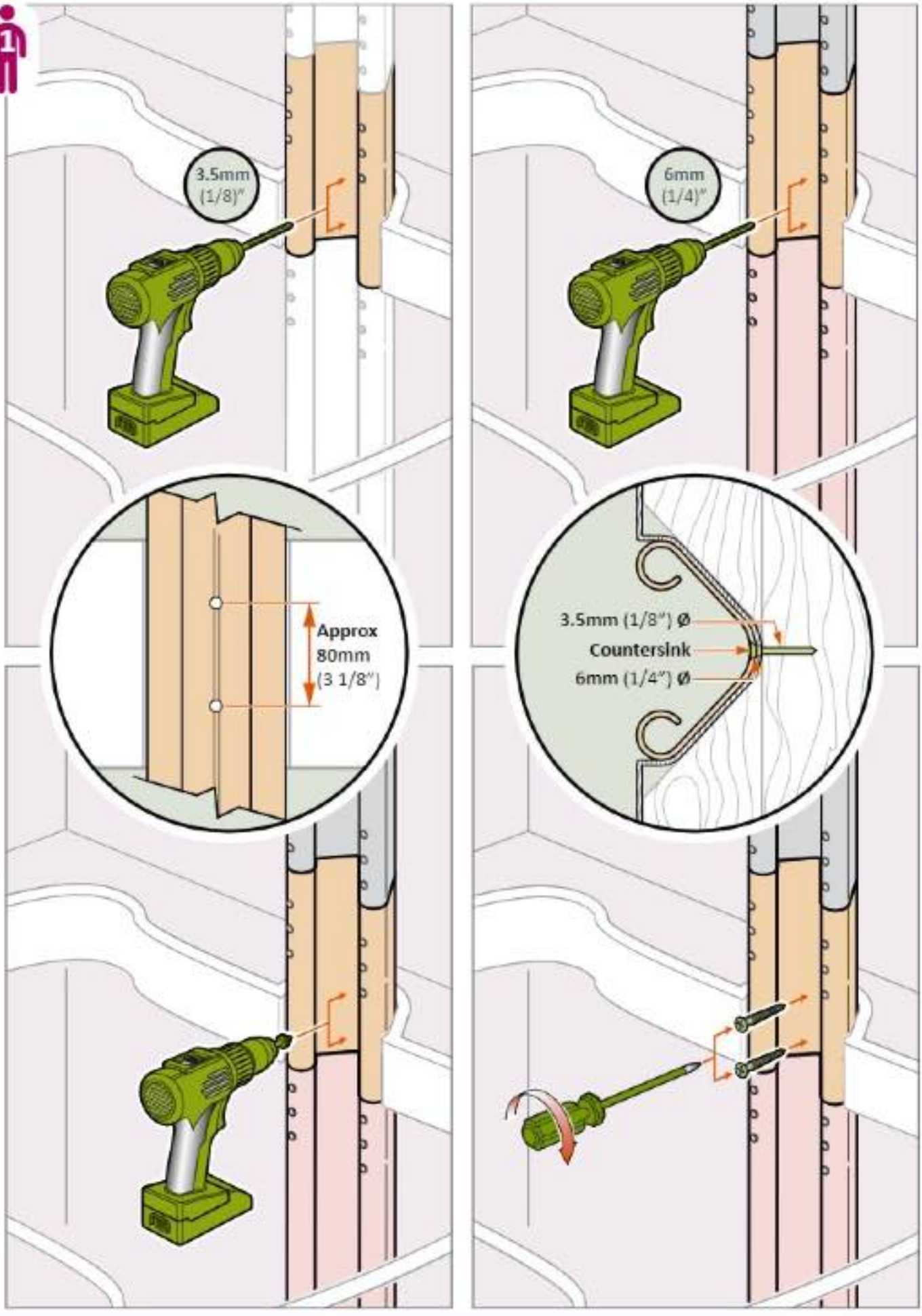
3.5mm
(1/8")
Approx
80mm
(3 1/8")
6mm
(1/4")
3.5mm (1/8") Ø
Countersink
6mm (1/4") Ø

Section 3: Rail Preparation

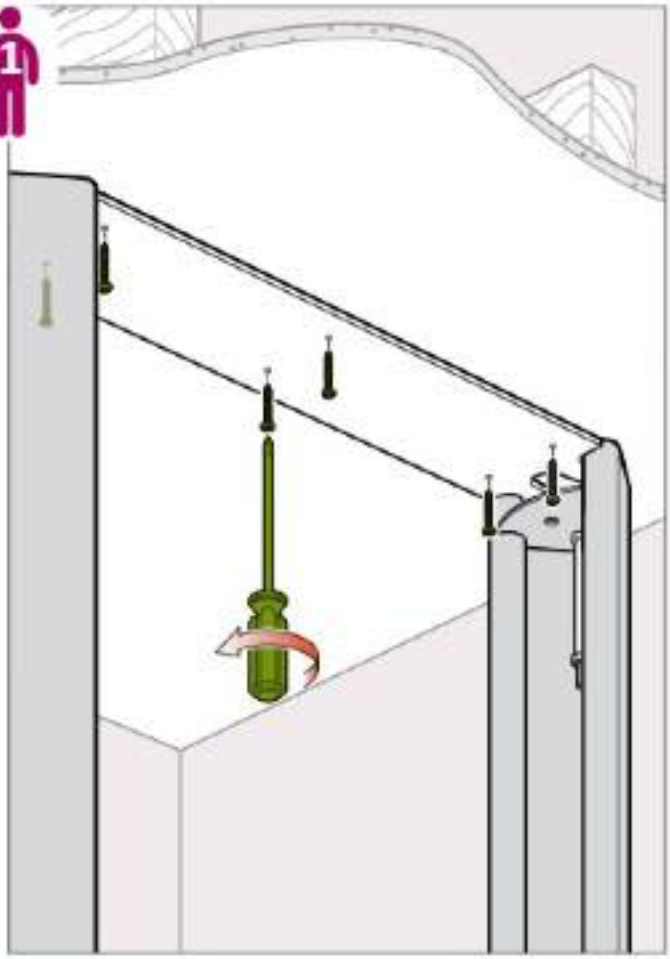

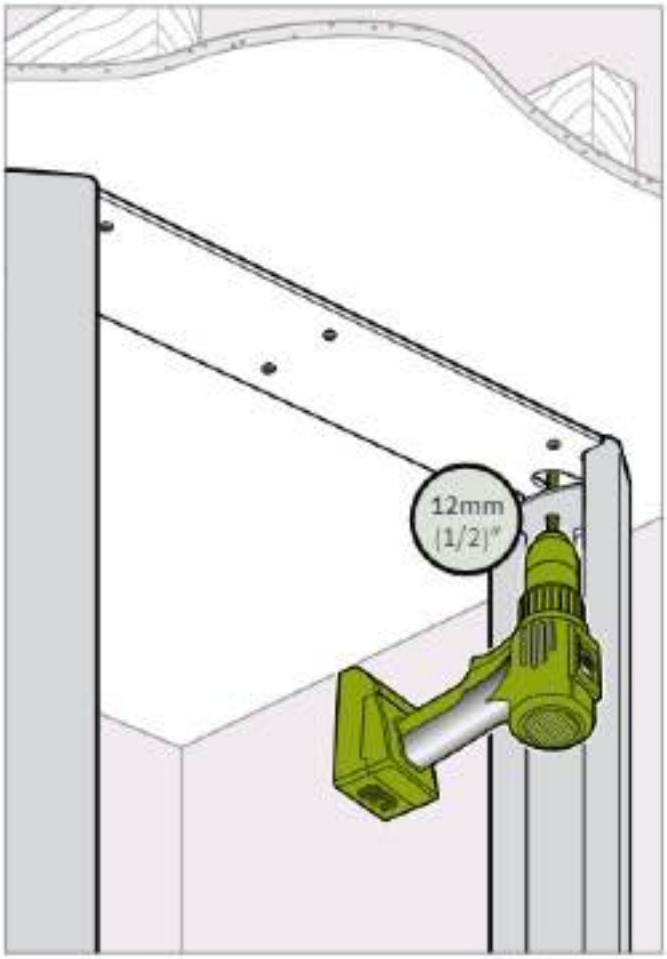

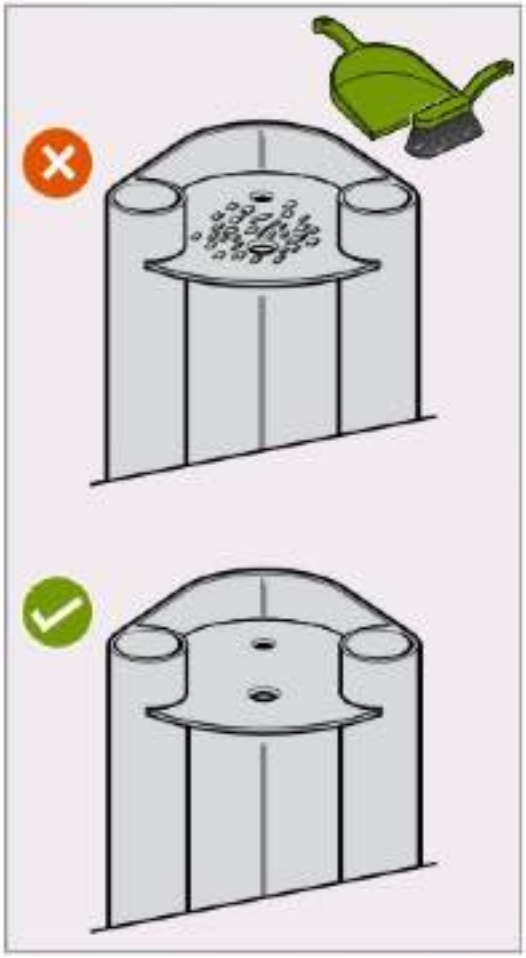

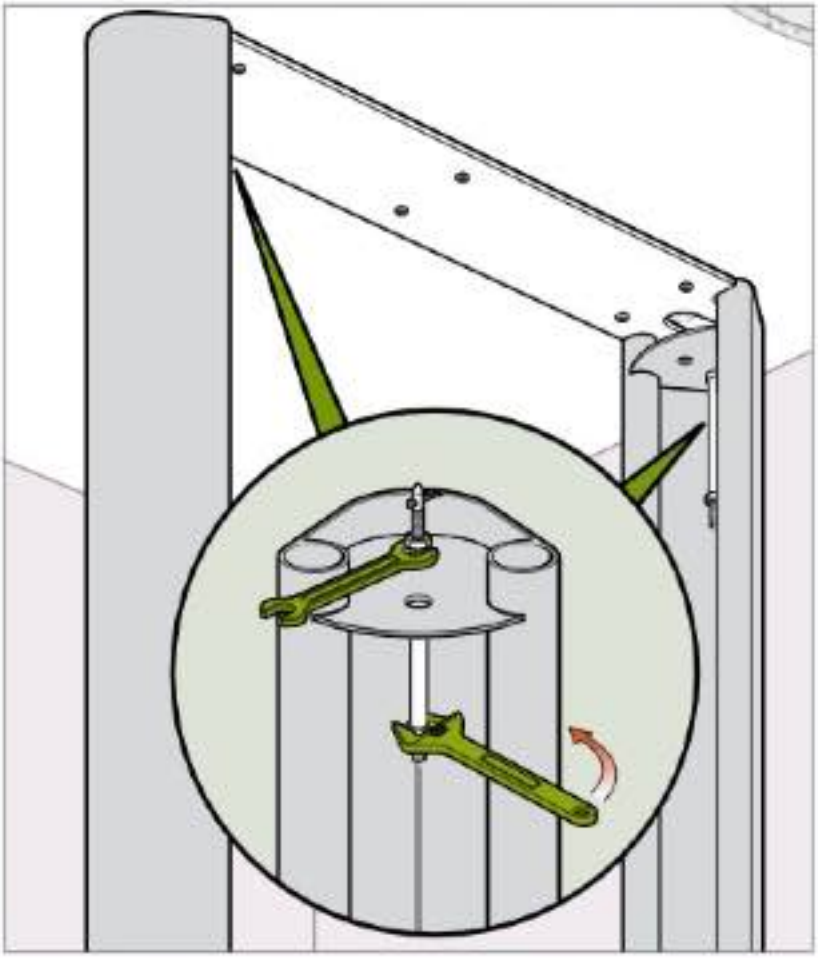

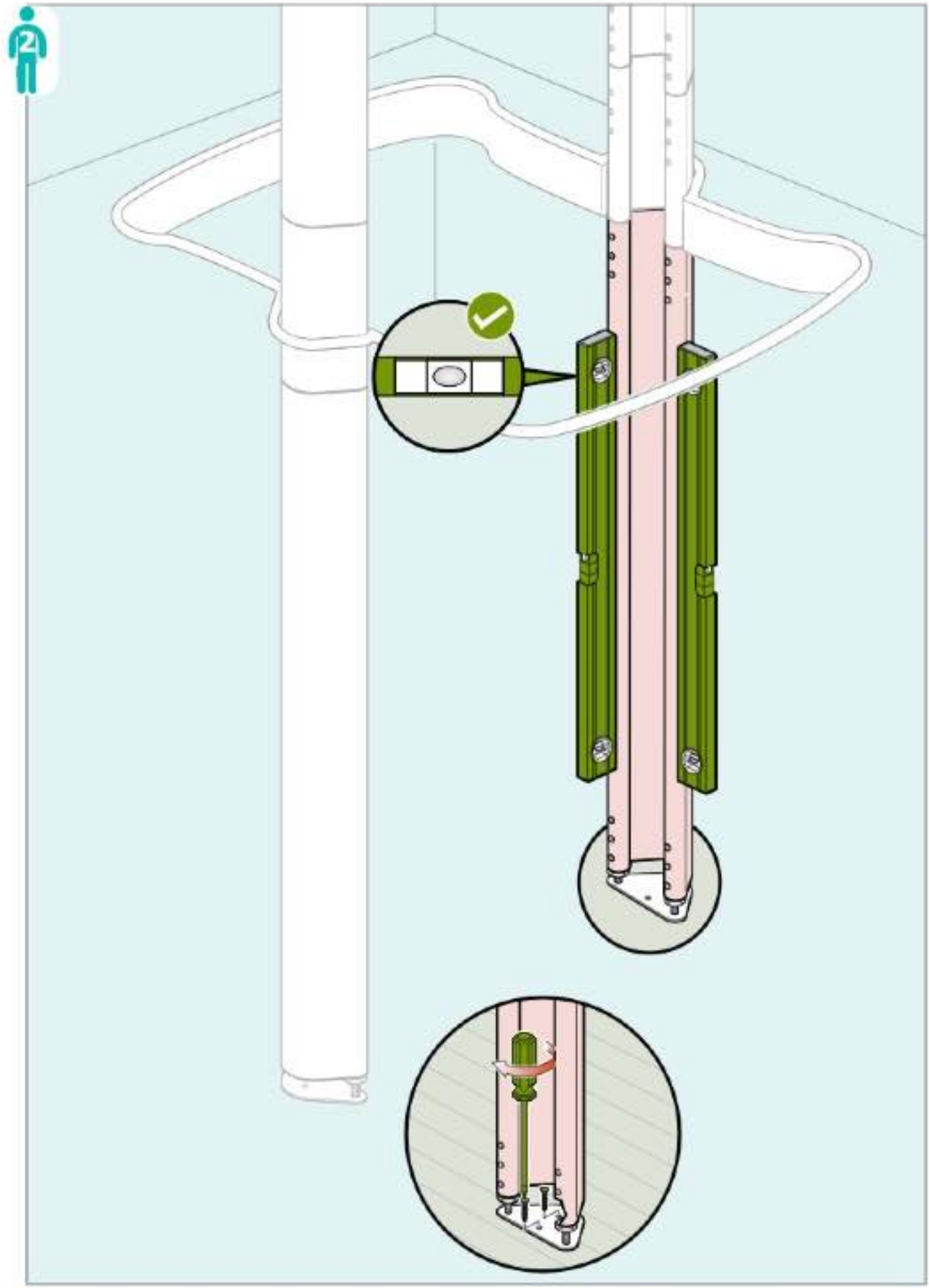

Section 3: Rail Preparation

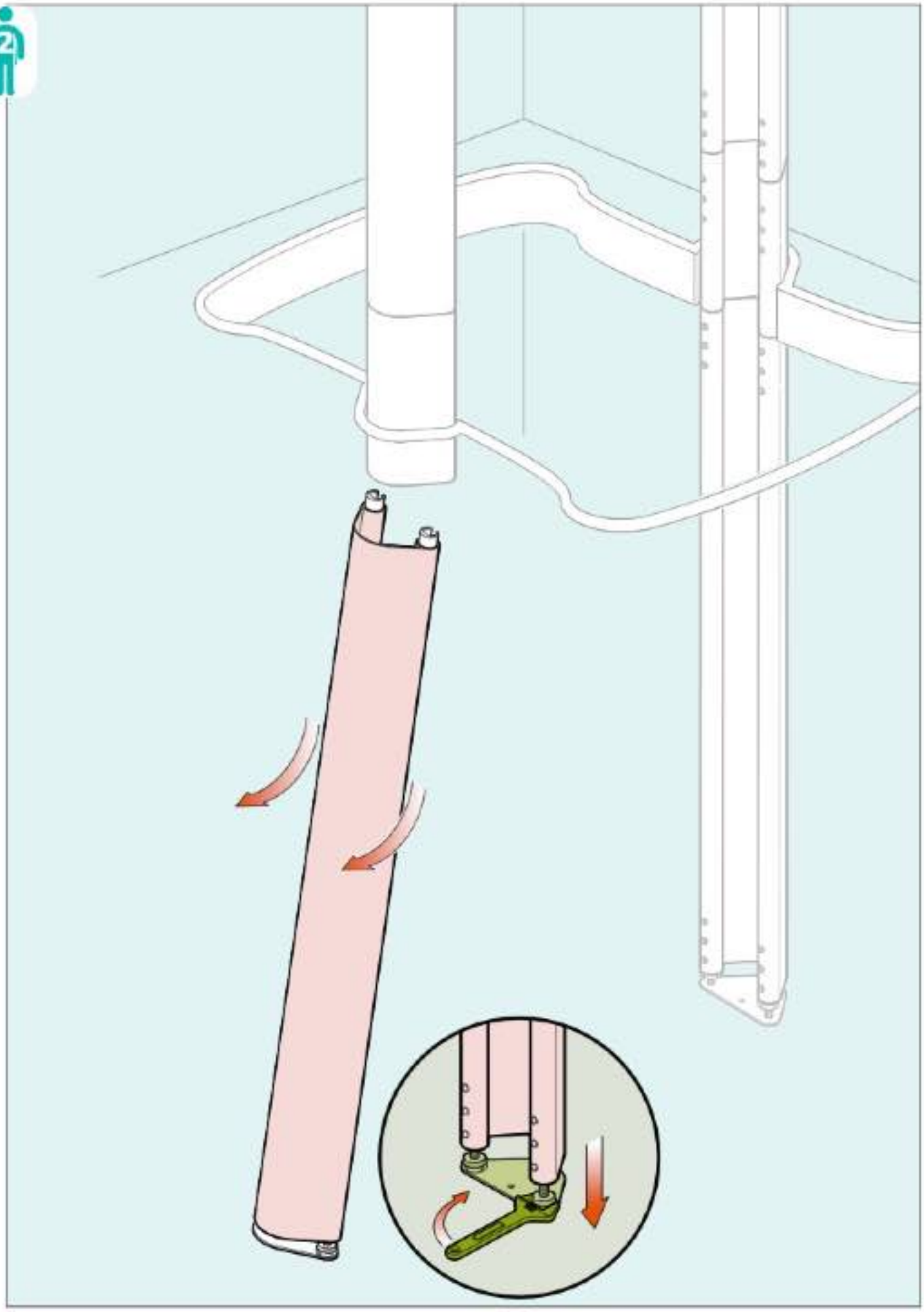

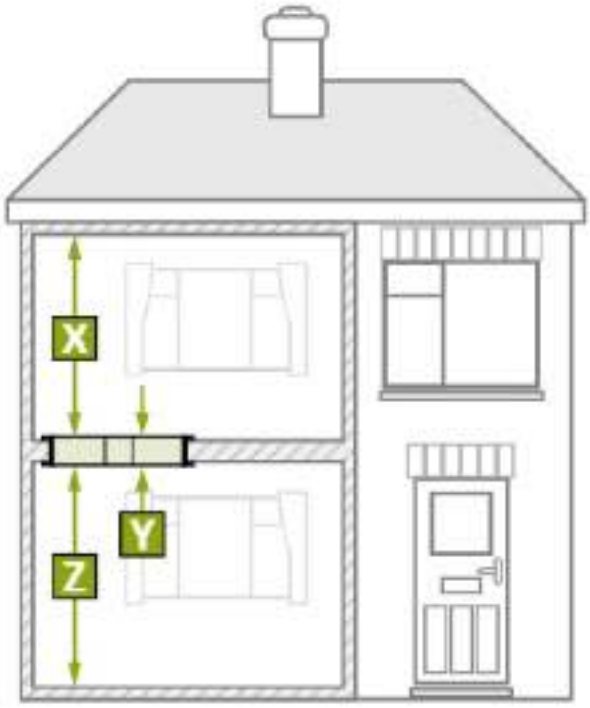

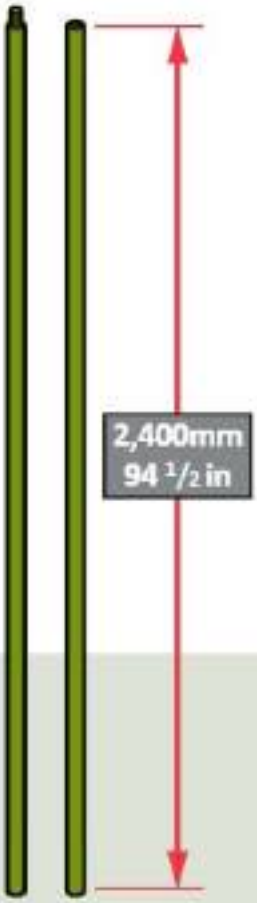

EXAMPLE:

X = 2,388mm (94 in)

Y = 381mm (15 in)

Z = 2,388mm (94 in)

Total Rail Length (TRL) X + Y + Z = 5,157mm (203 in)

TRL 5,157mm - 1,930mm = 3,227mm *(required length of gripper rods)*

TRL 203 in - 76in = 127 in *(required length of gripper rods)*

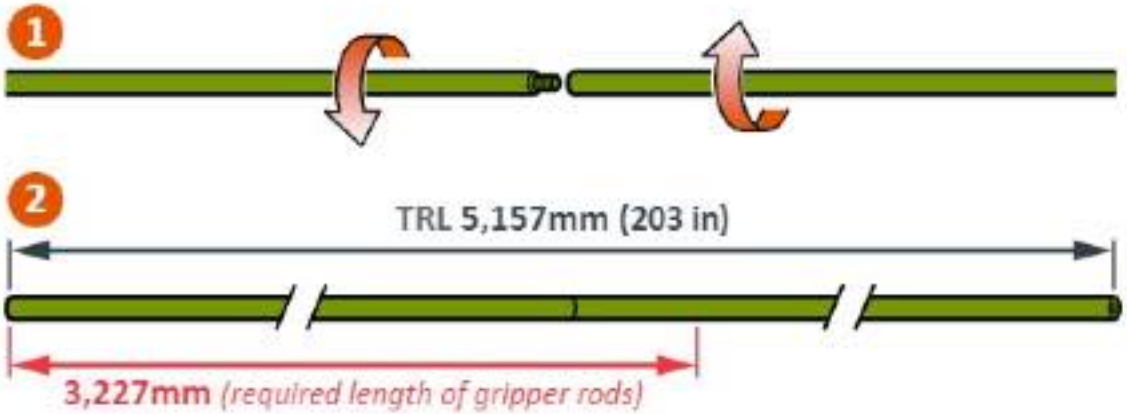

NOTE: Gripper Rod length should be 1,930mm (76 in) above the lowest level floor.

Section 3: Rail Preparation

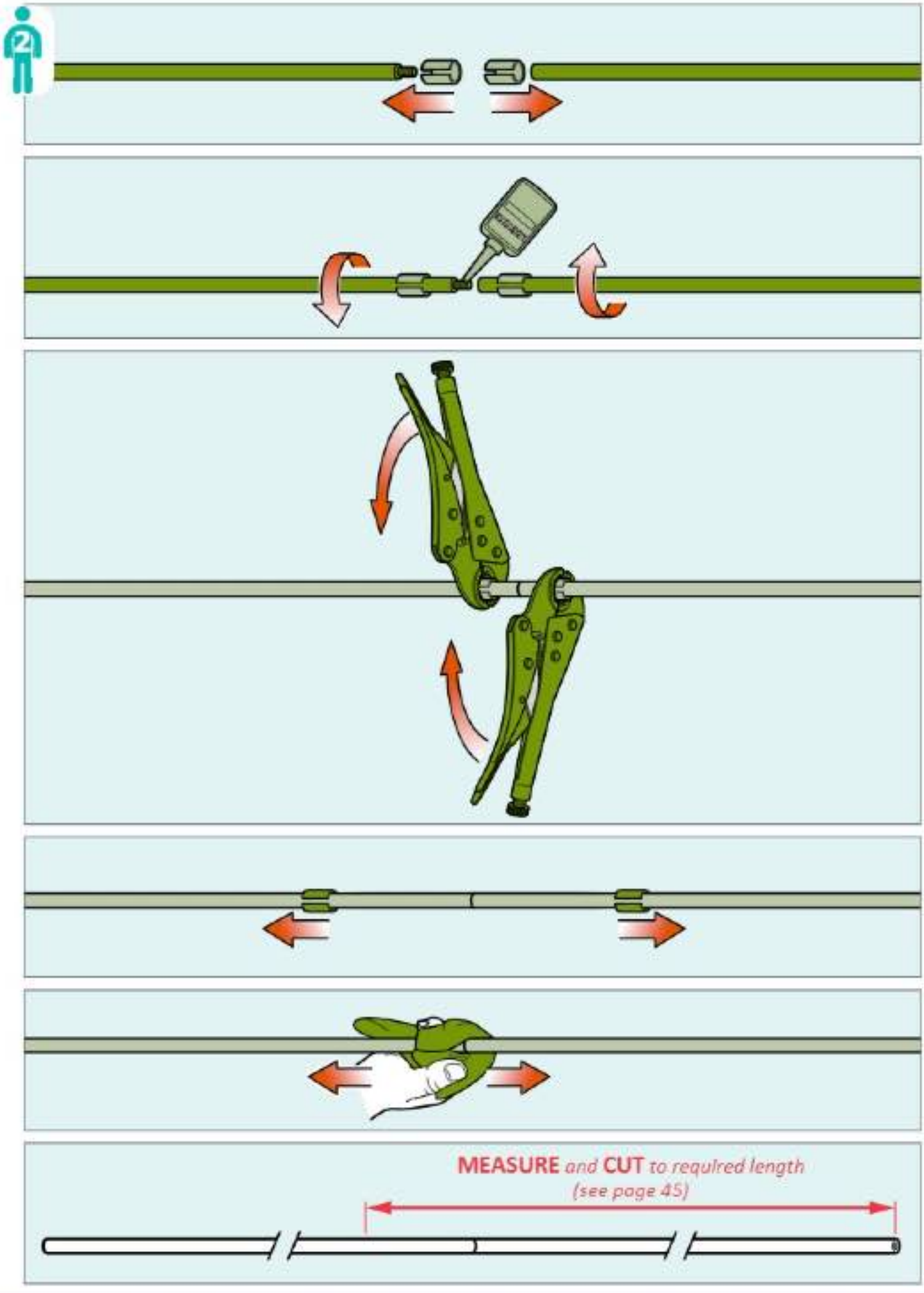

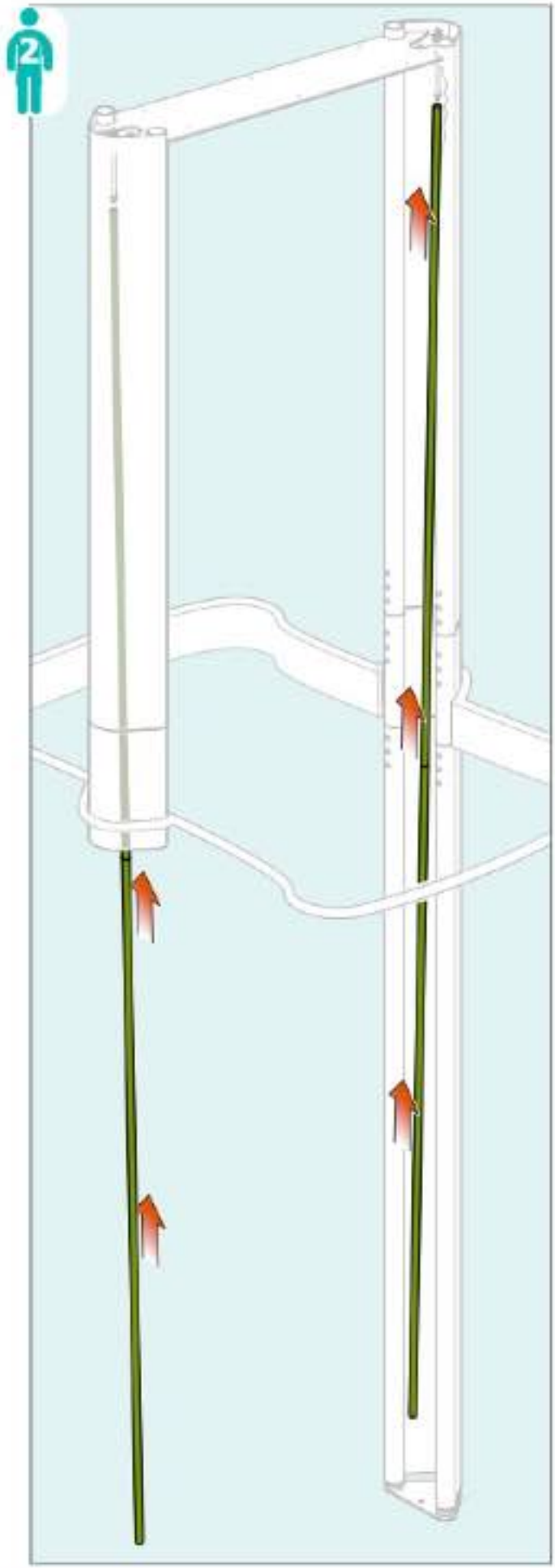
2

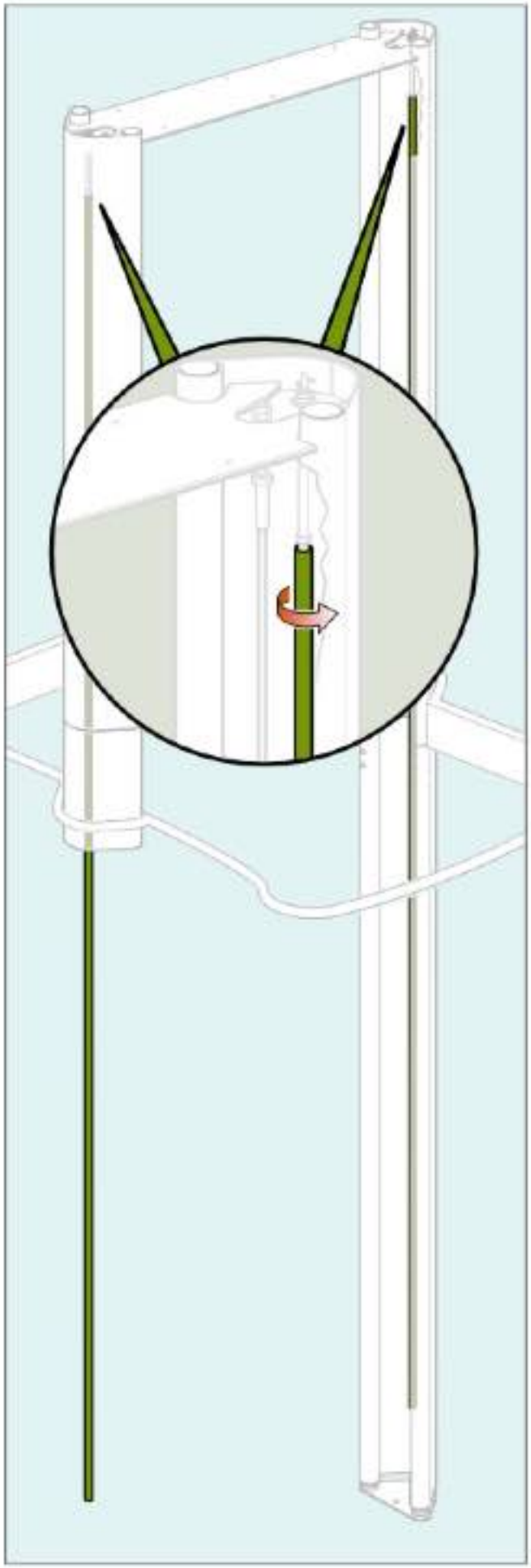

Installation Guidelines

Stiltz™ Homelifts

SECTION 4
Hoist Preparation

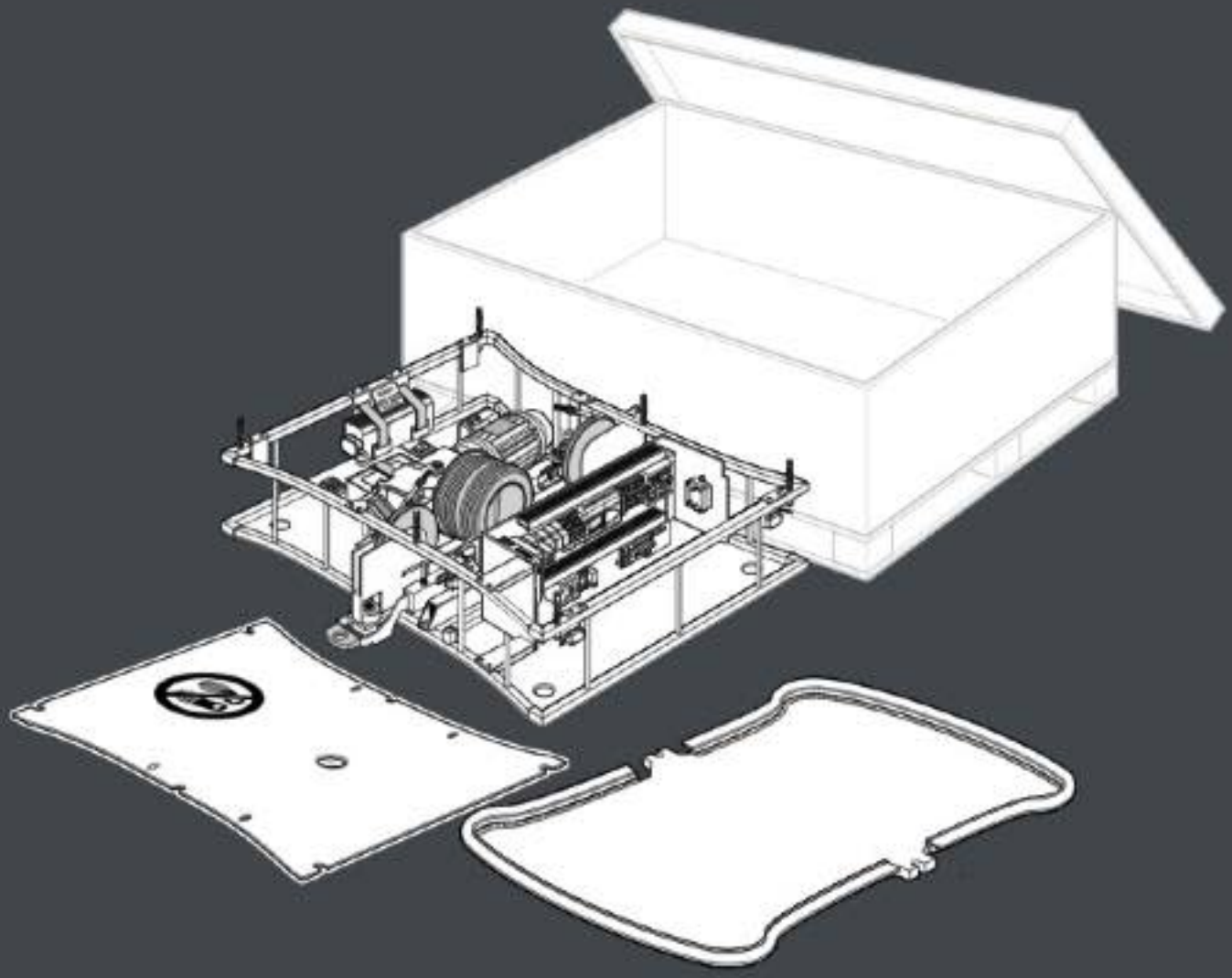

INSTALLATION GUIDELINES

Section 4: Hoist Preparation

Supplied with Installation Kit (sold separately)

50104-00038
Remote Pendant



10602-00035
Safety Pan Bridge Lead



55102-00058
Installation Sling Set

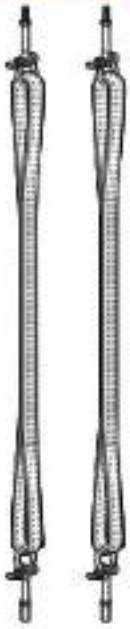

30107-00003
Open End Spanner 36mm



30113-00048
T Type Allen Key 4mm



Tools required

Electrical Multi Meter



Allen Keys (Metric)



Cross Screwdriver



Flat Screwdriver



Spanners



Scissors



6 ' Ladder



Steps



Long Nose Pliers



Brush and Dustpan



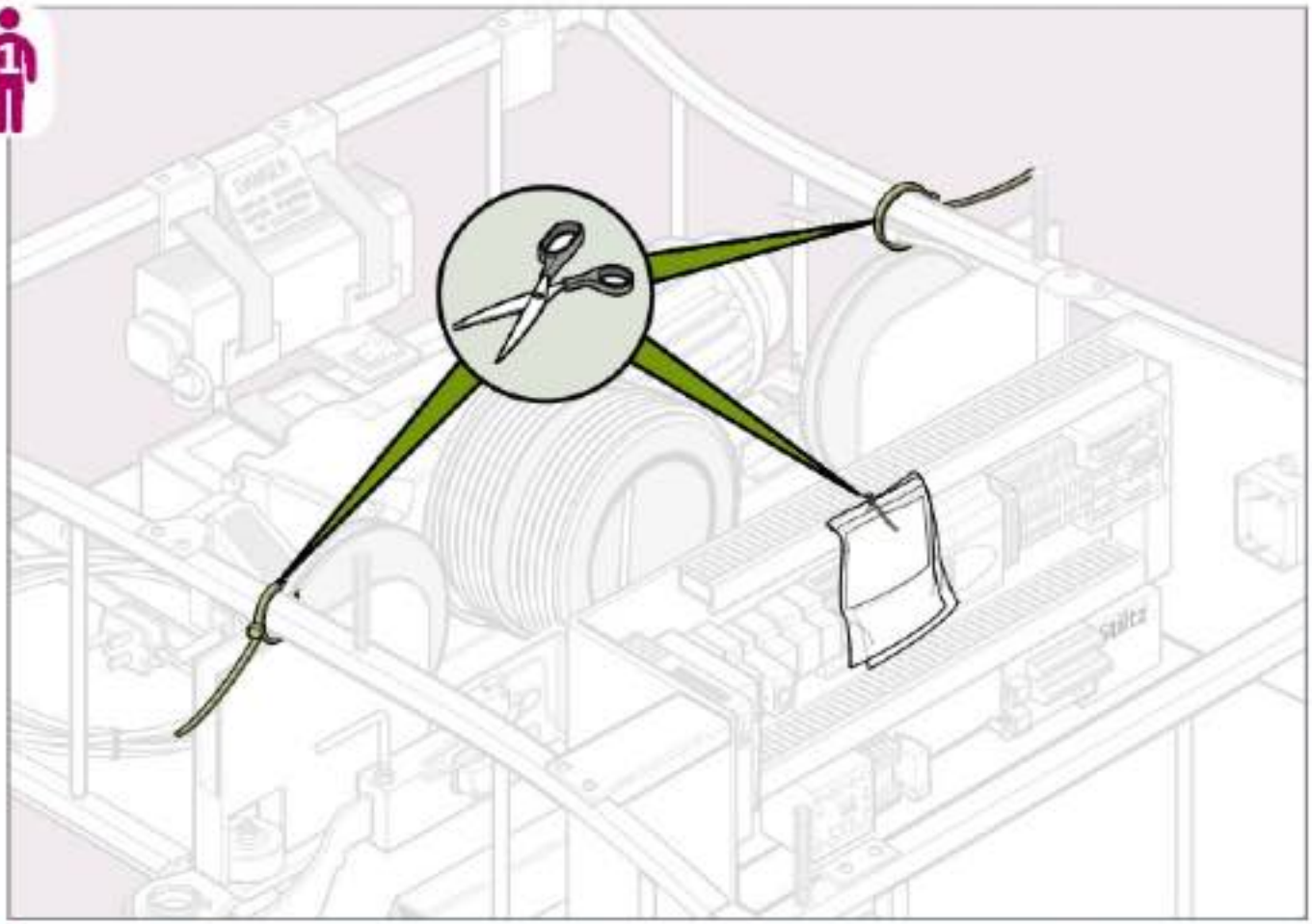

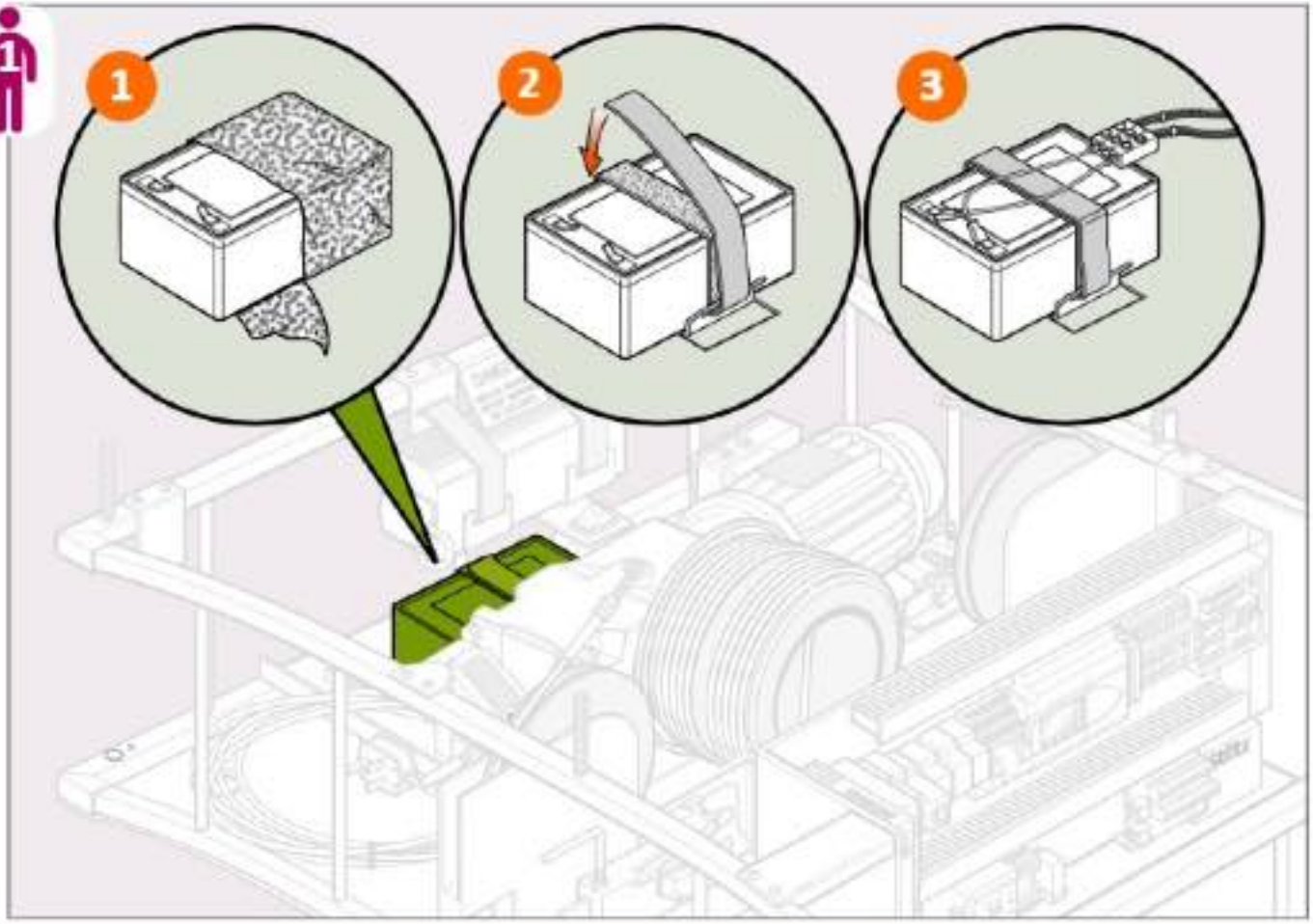
1
2
3

Section 4: Hoist Preparation

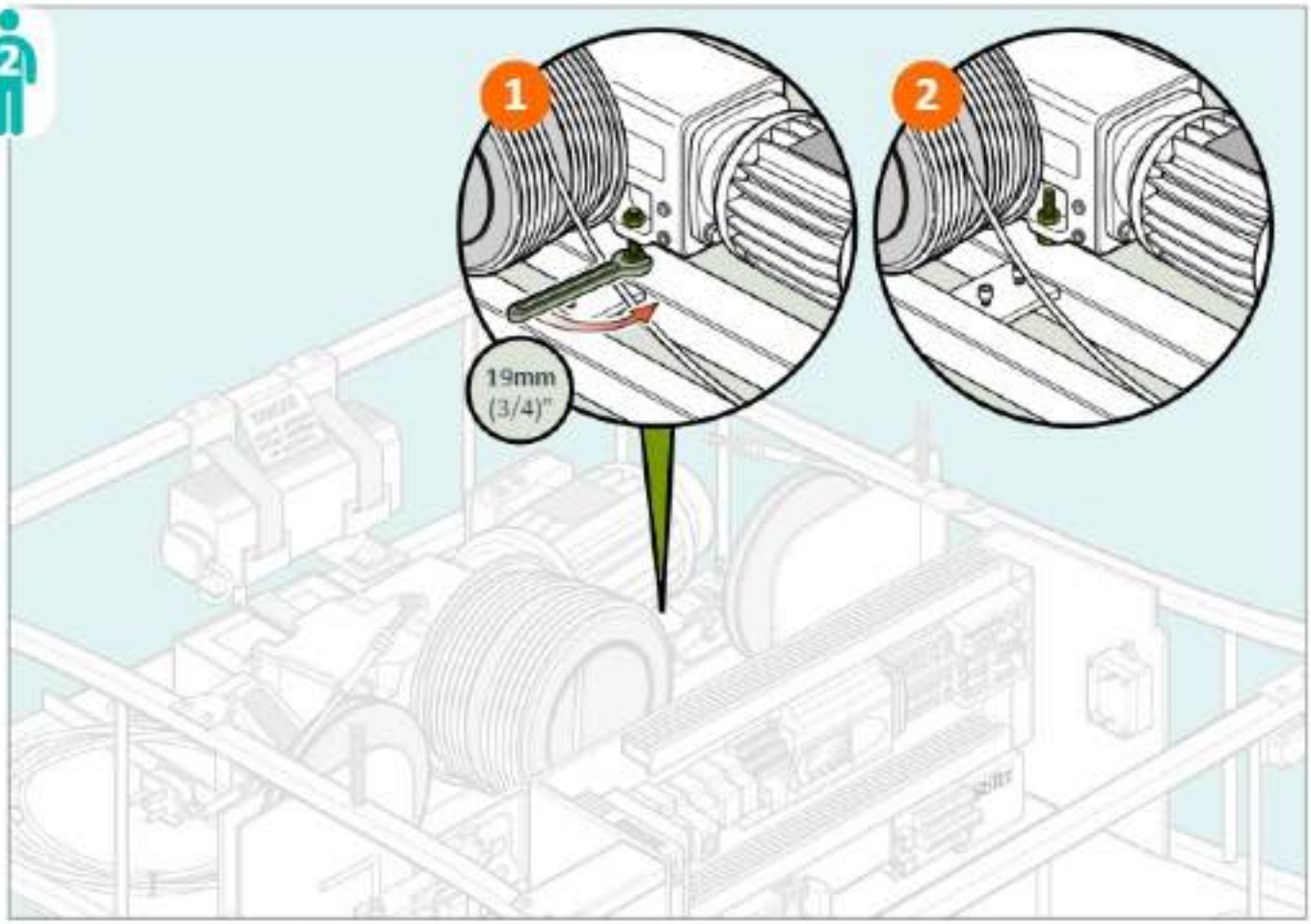

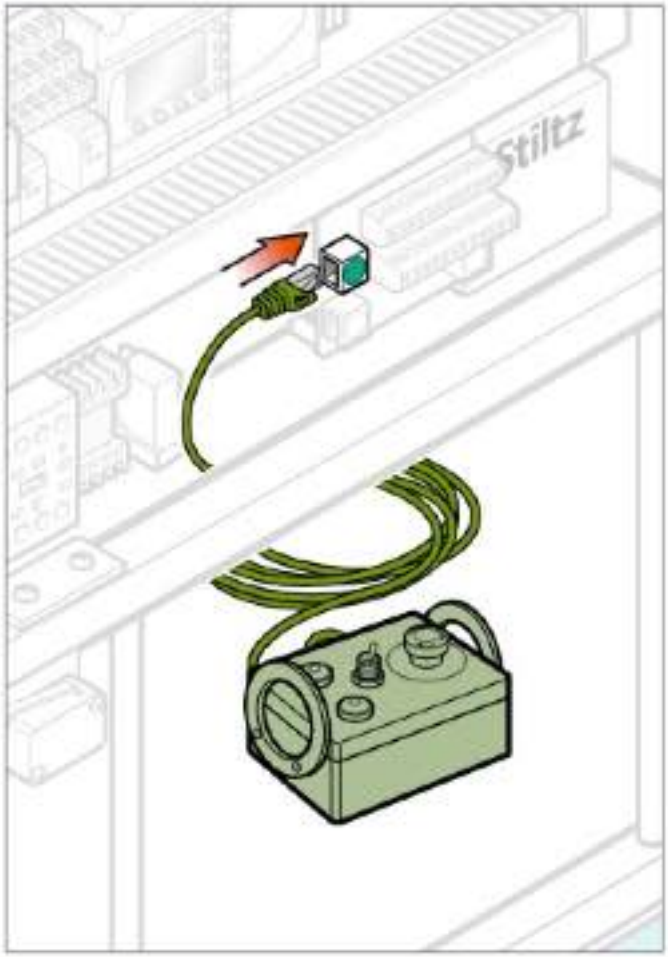

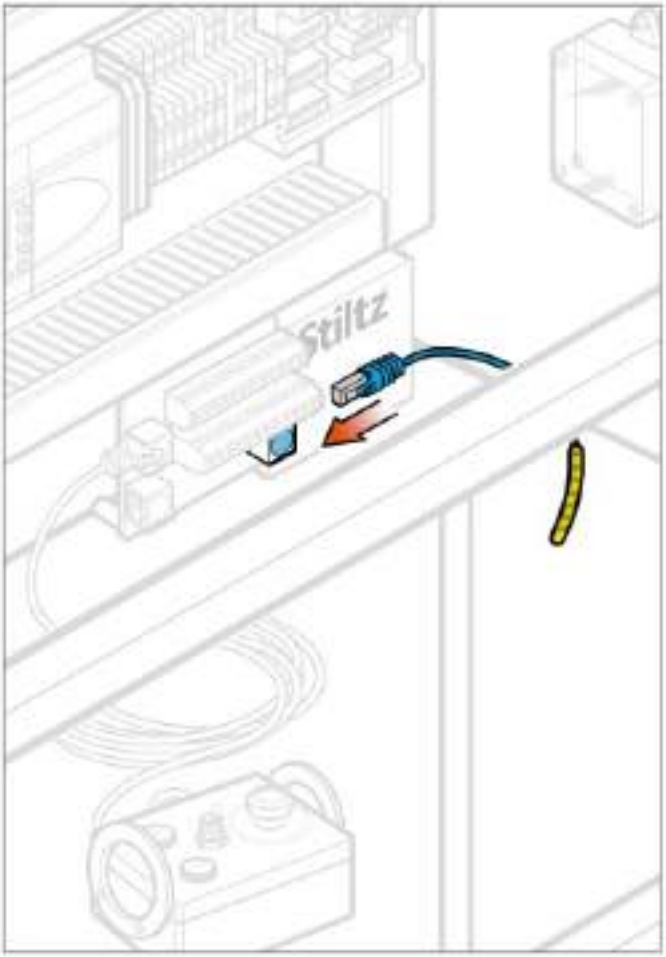

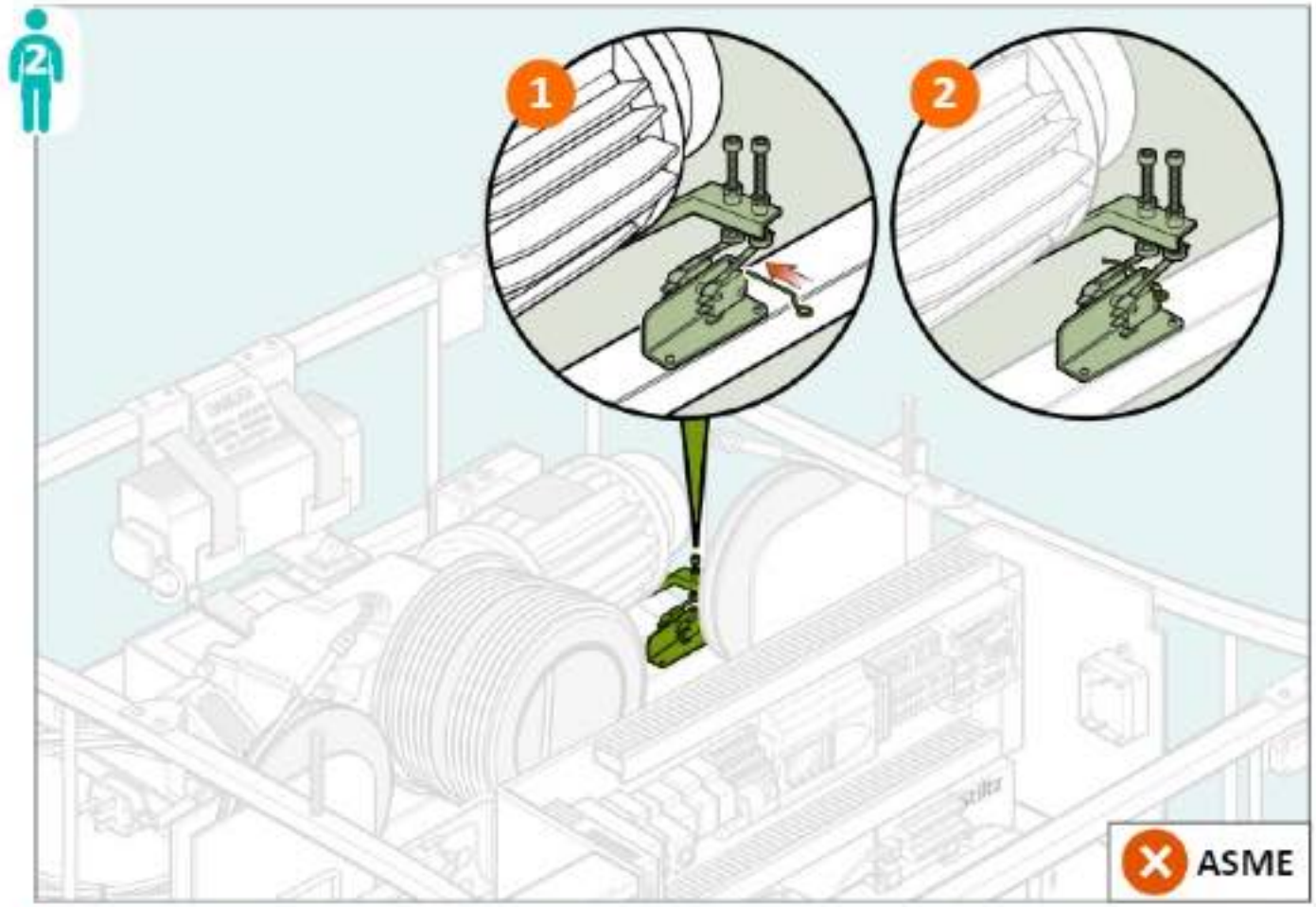
2
1
2
ASME

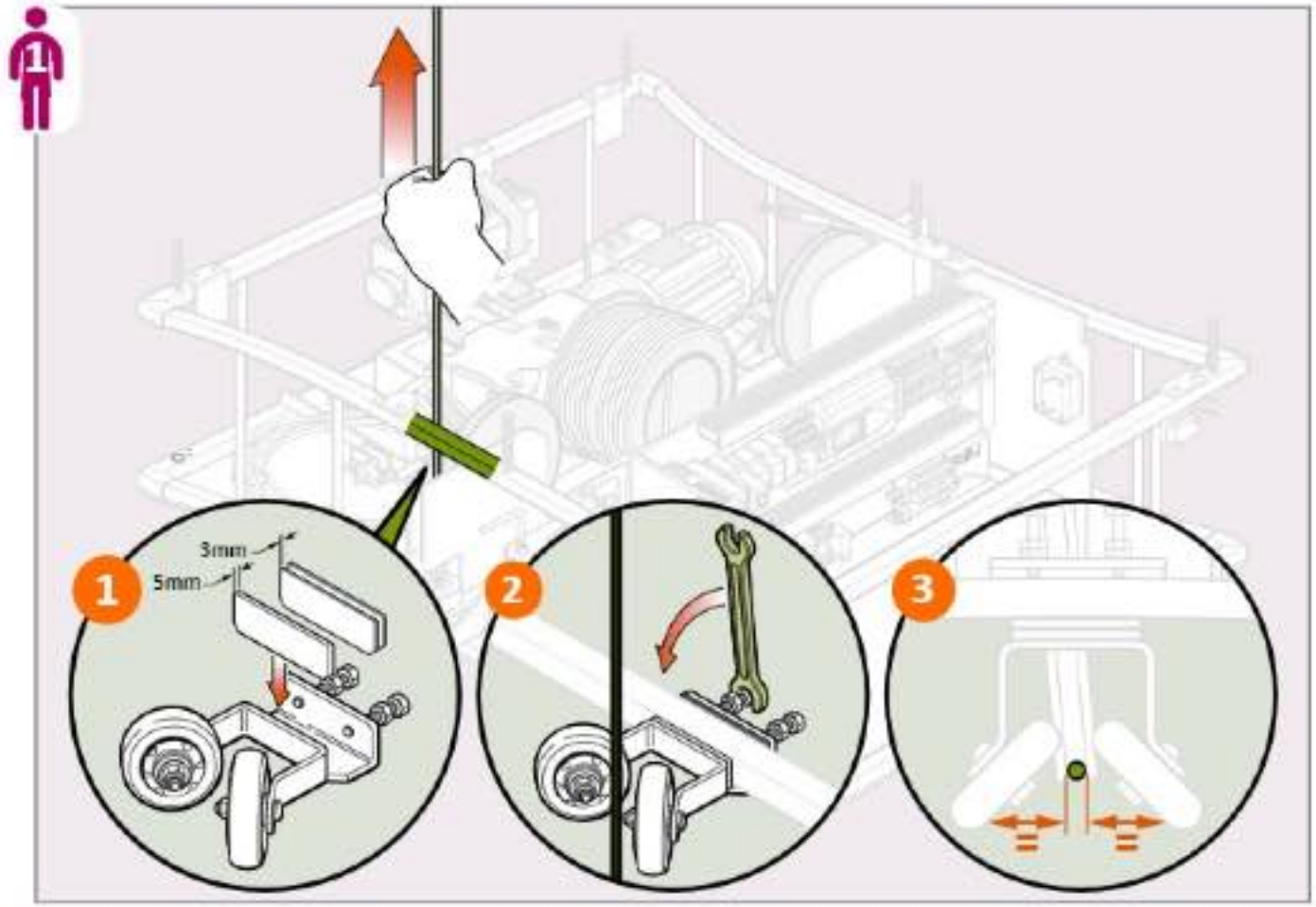
1
1
3mm
5mm
2
3

Section 4: Hoist Preparation

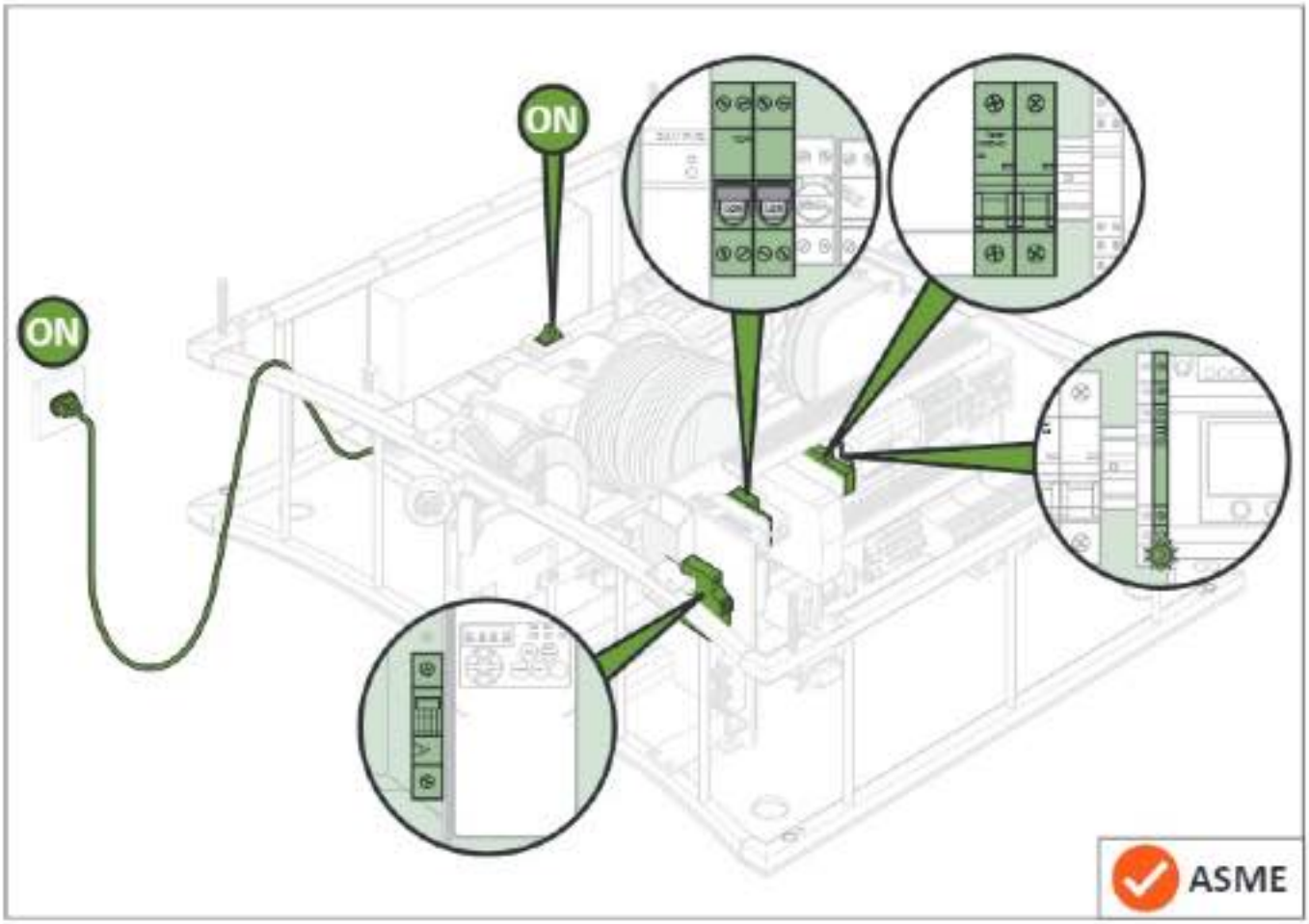

Section 4: Hoist Preparation

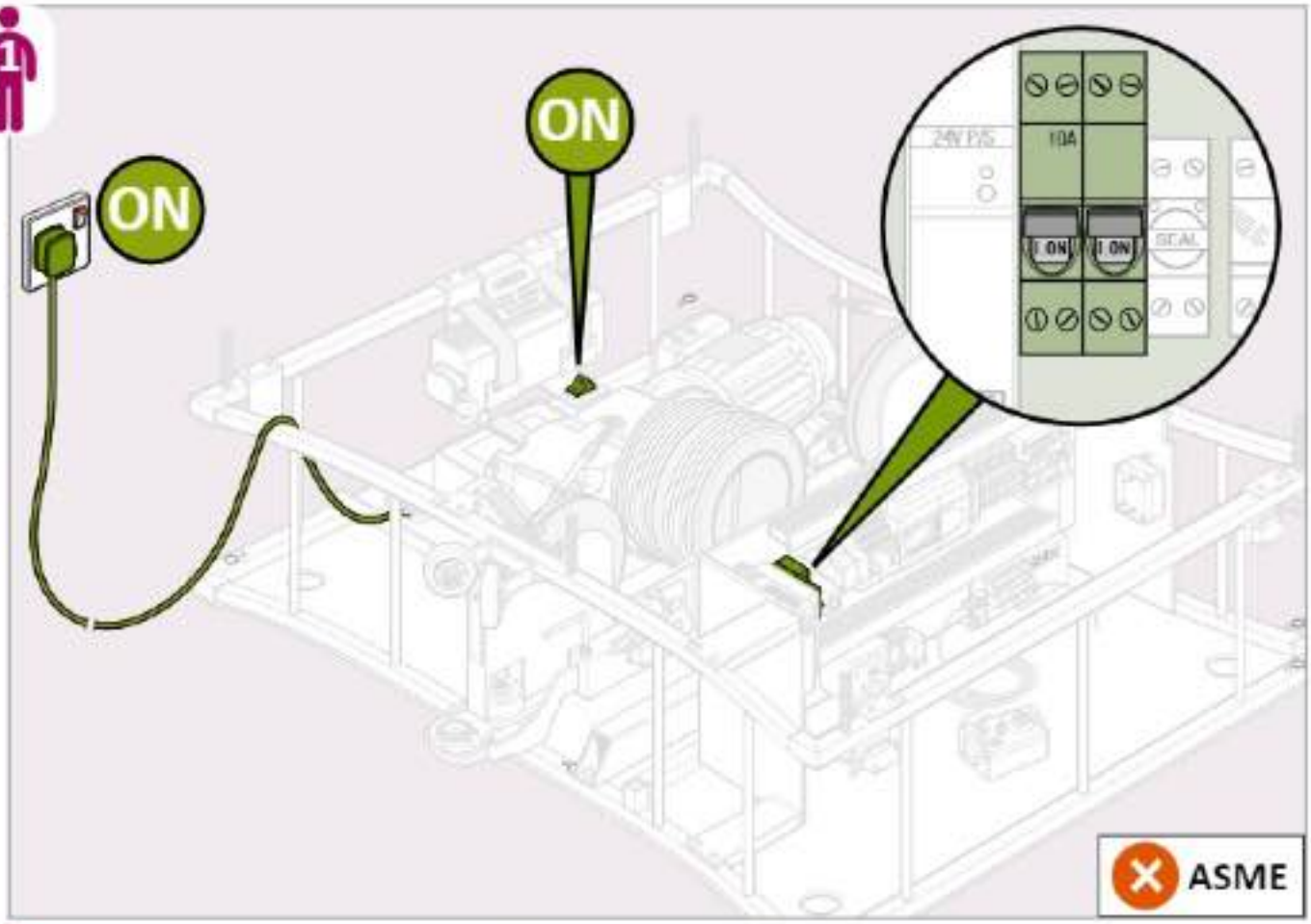

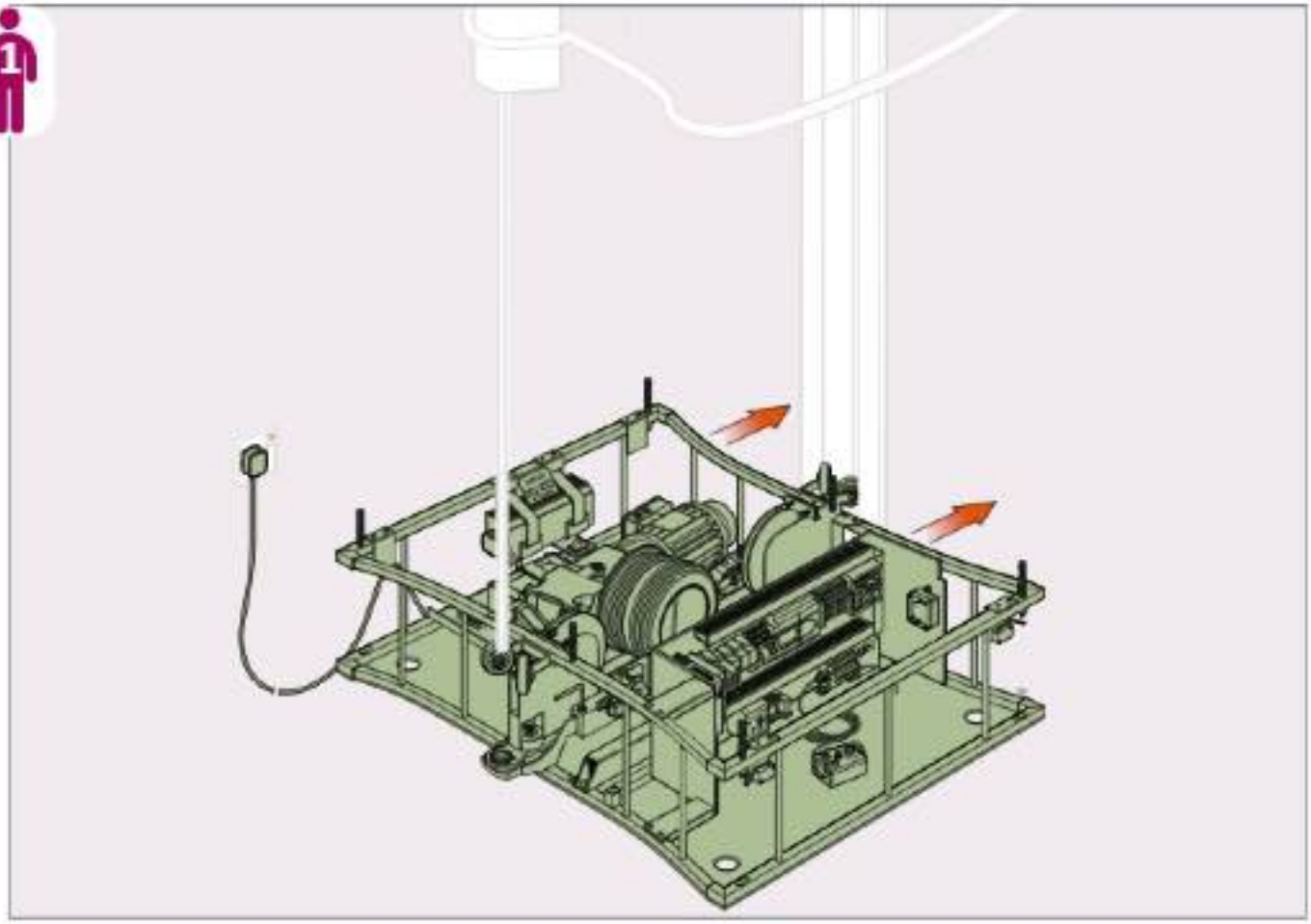

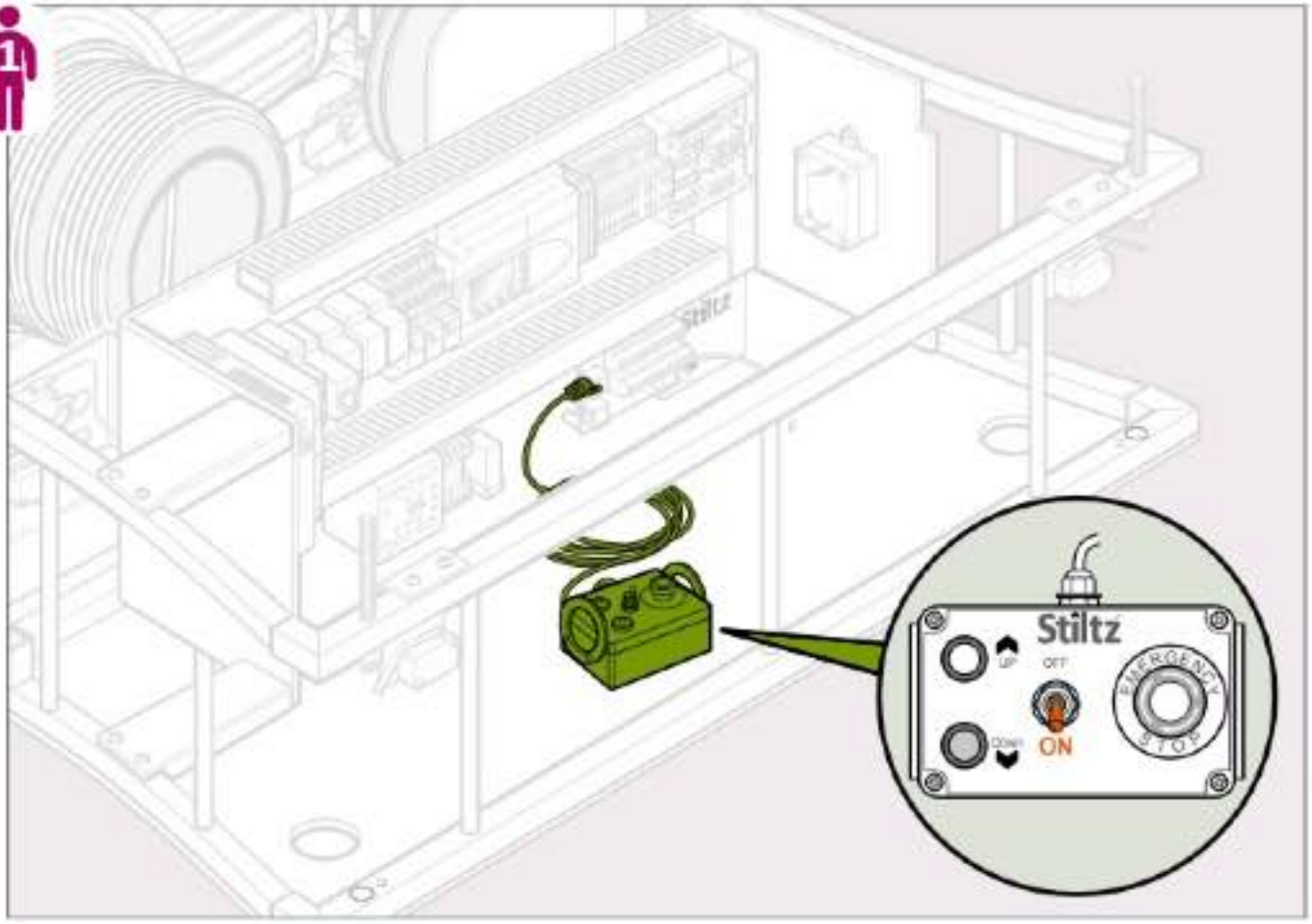
Stiltz
UP
OFF
ON
DOWN
EMERGENCY STOP

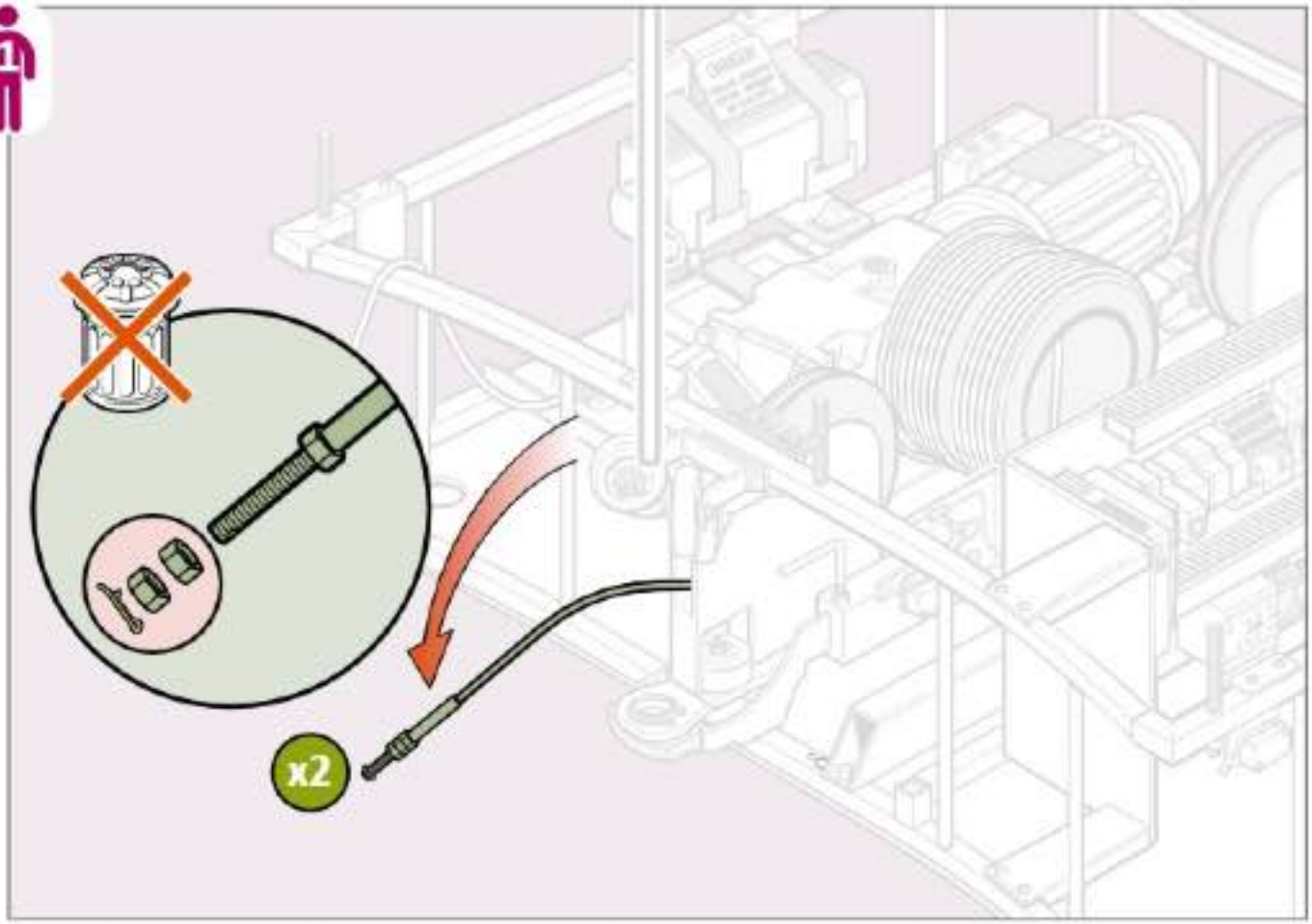
x2

Section 4: Hoist Preparation

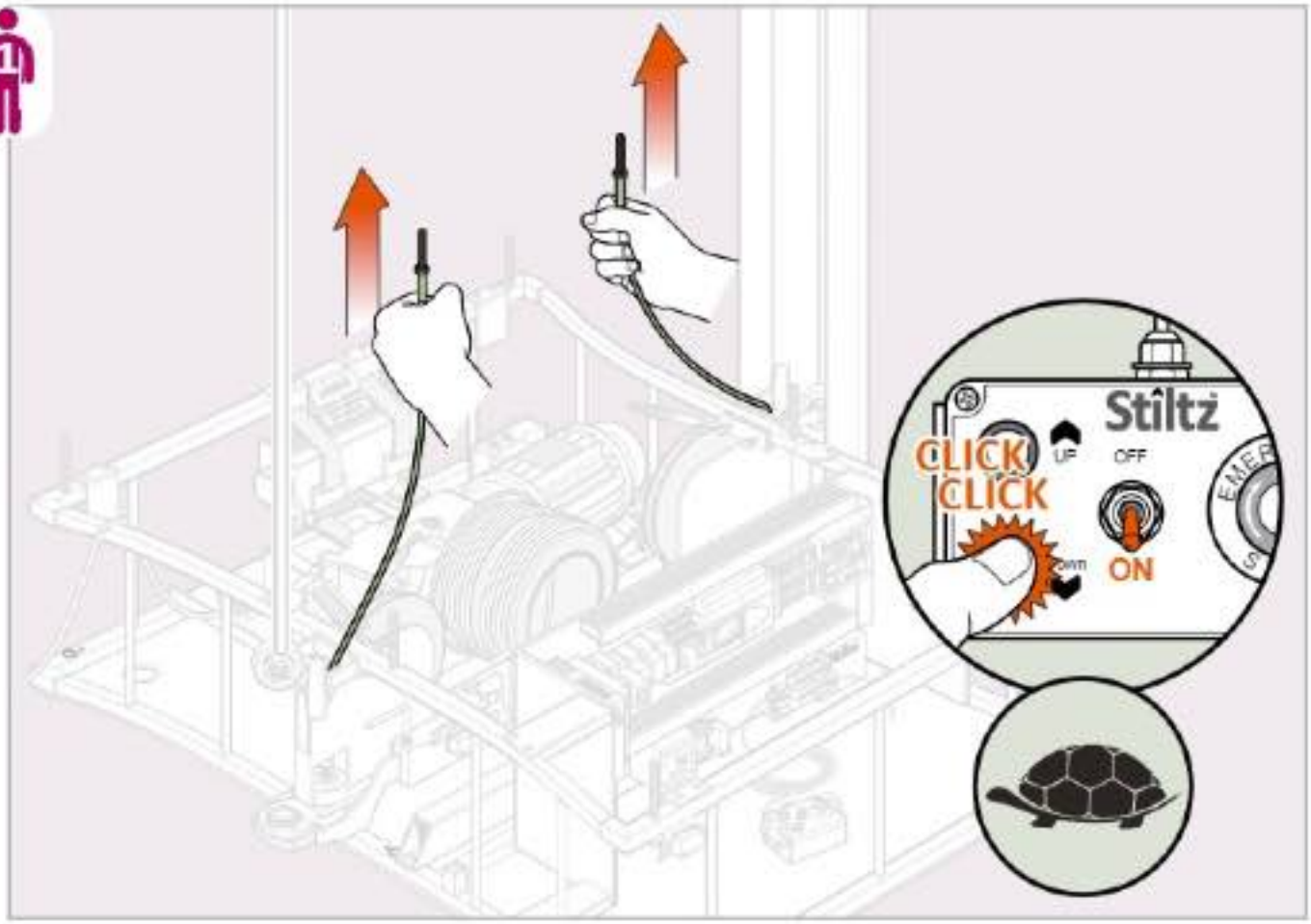

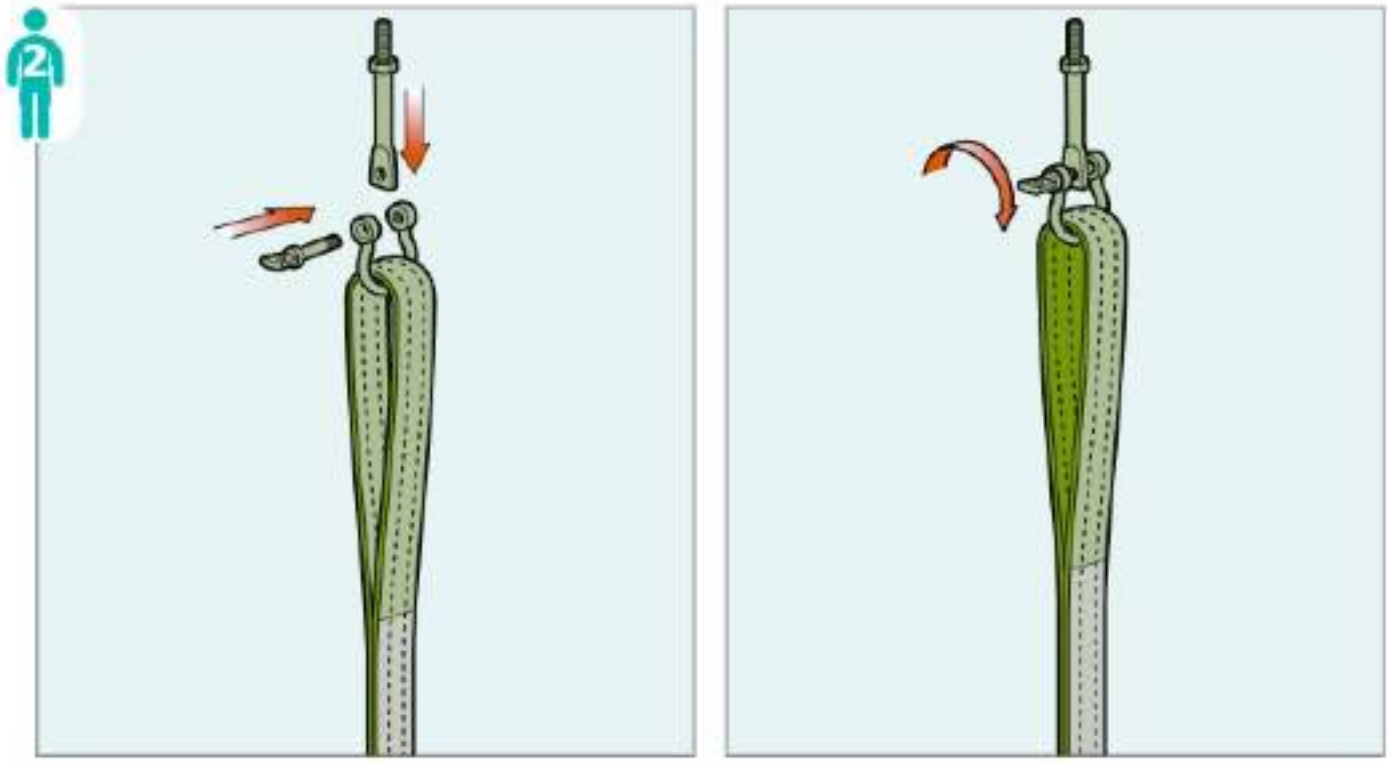

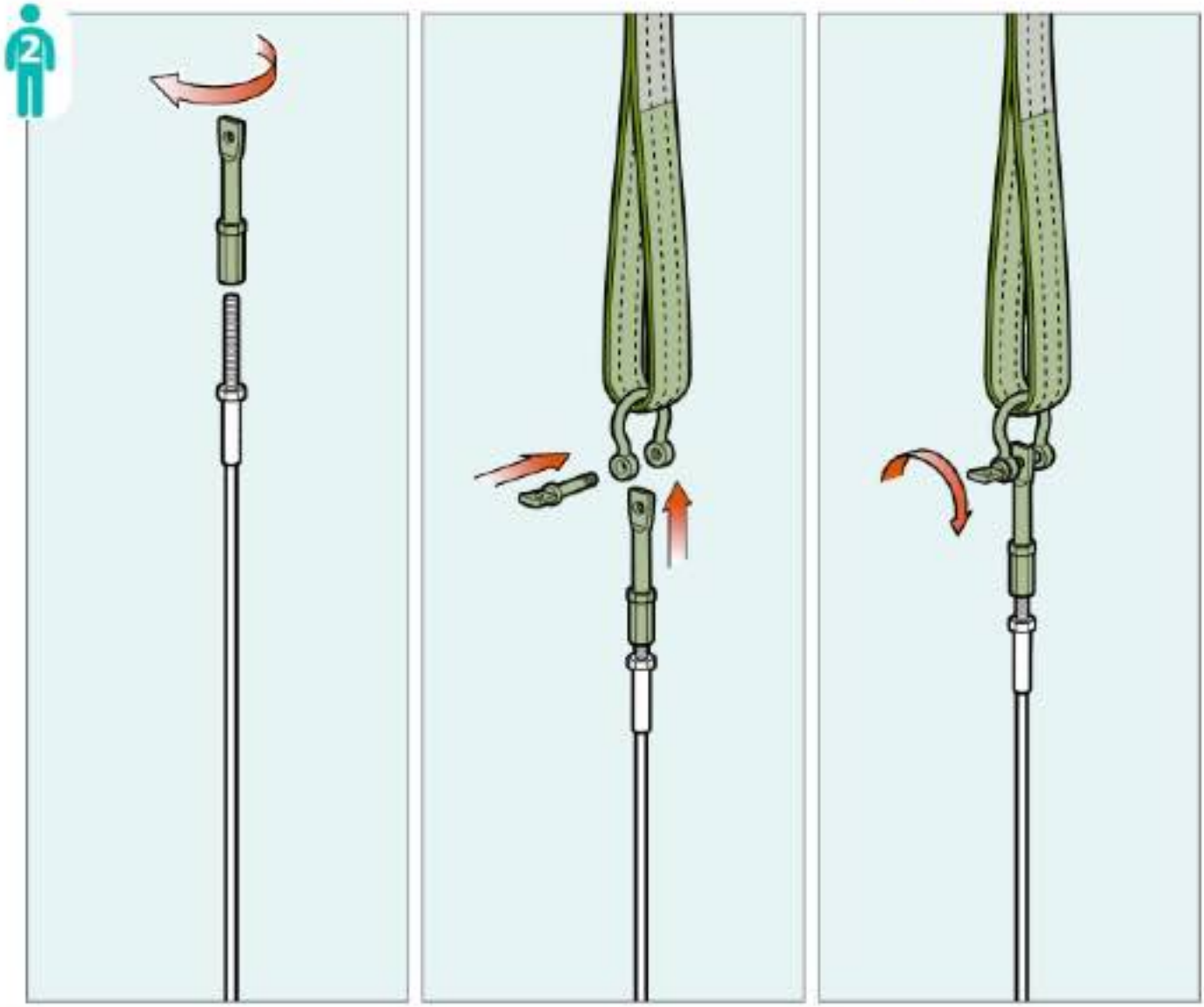

Section 4: Hoist Preparation

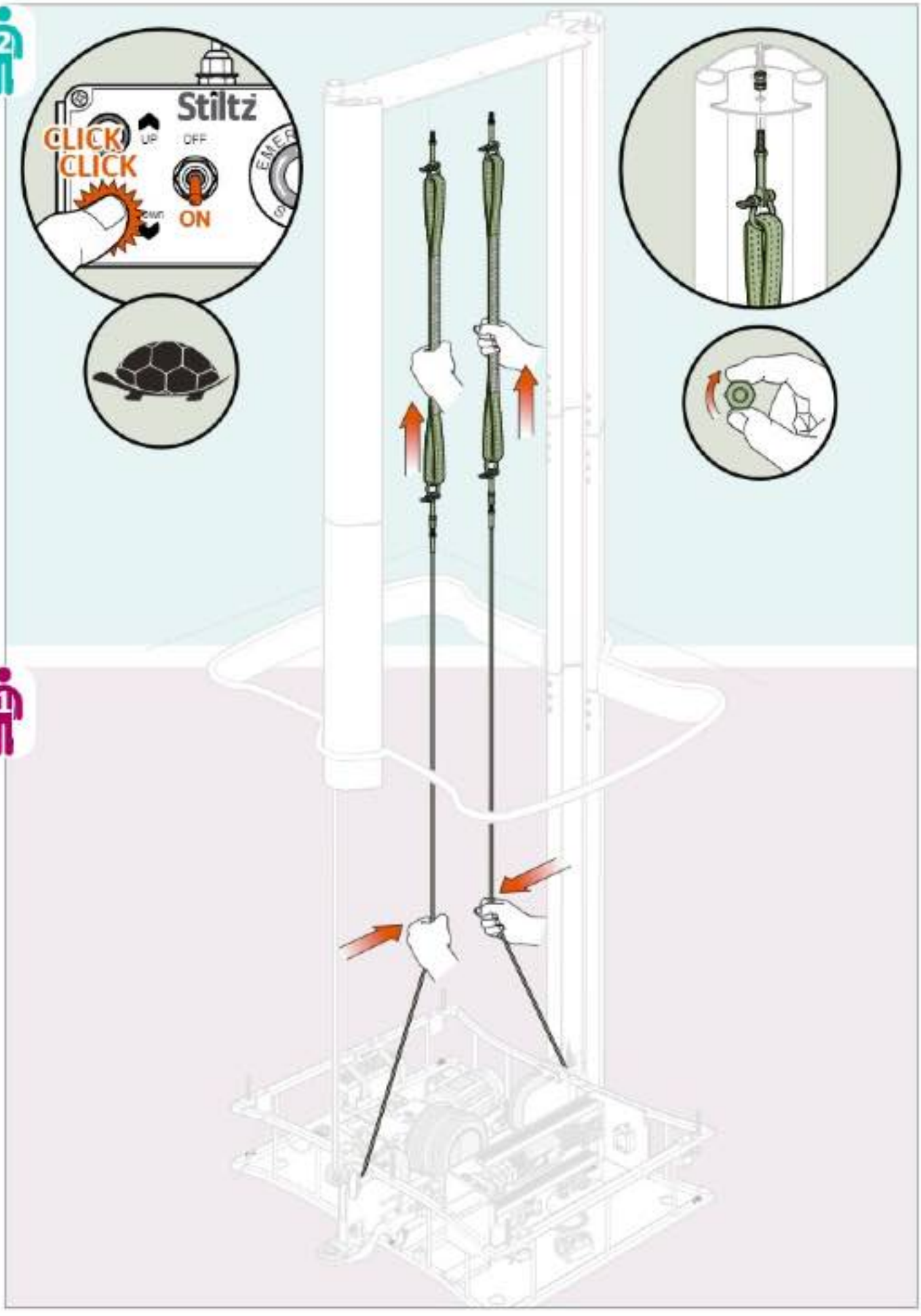

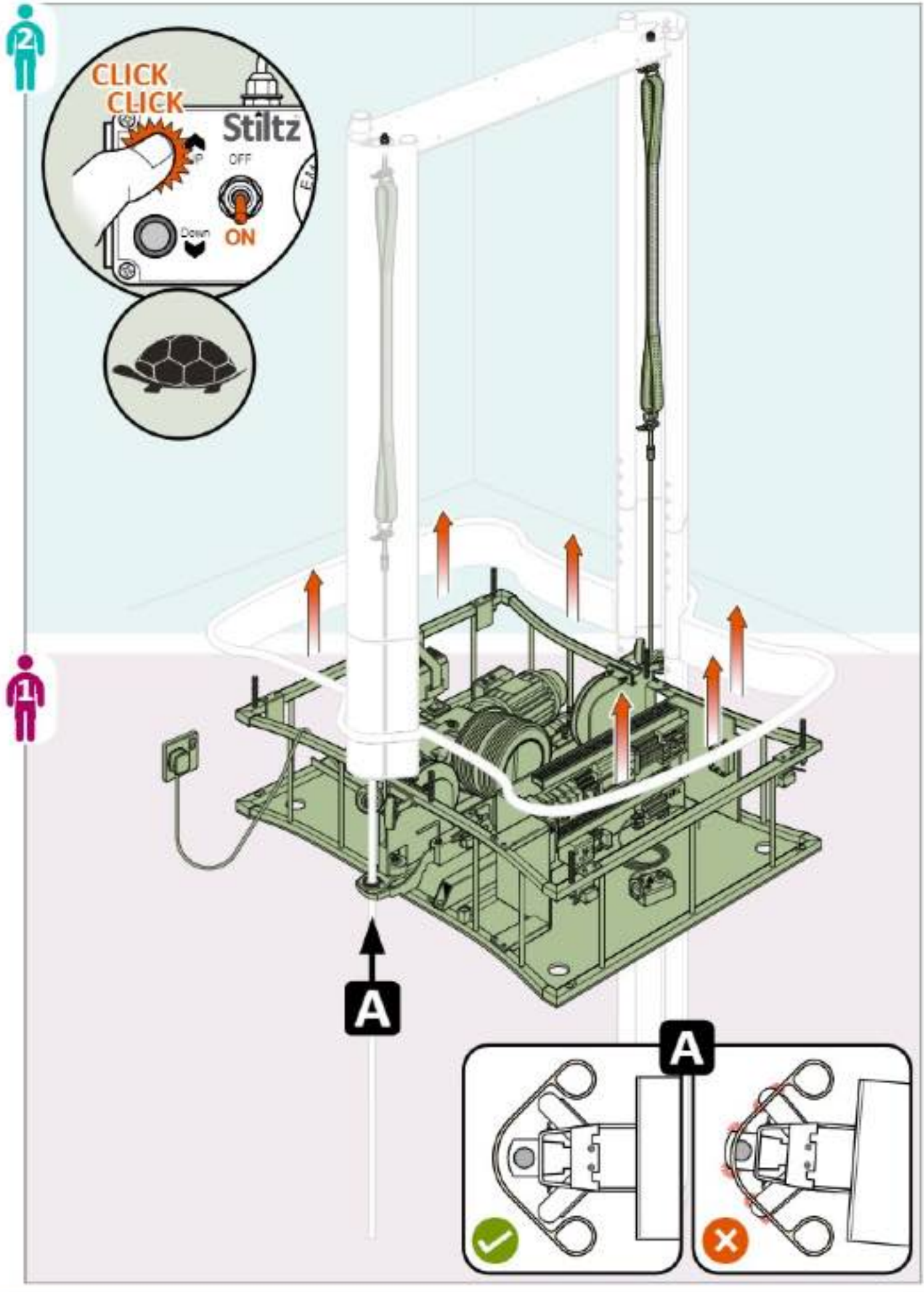
2
CLICK
CLICK
Stiltz
OFF
Down
ON
1
A
A

Section 4: Hoist Preparation

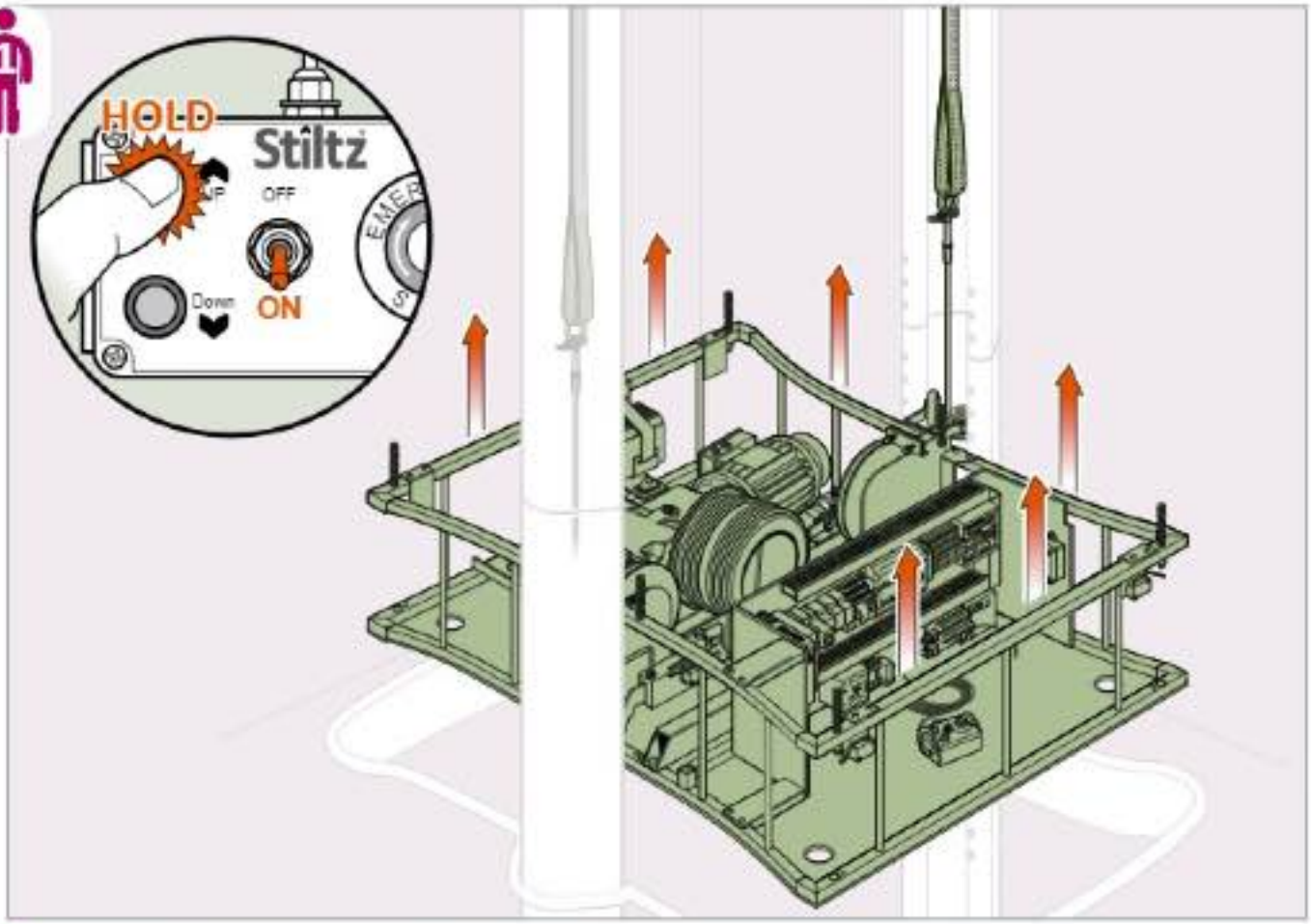

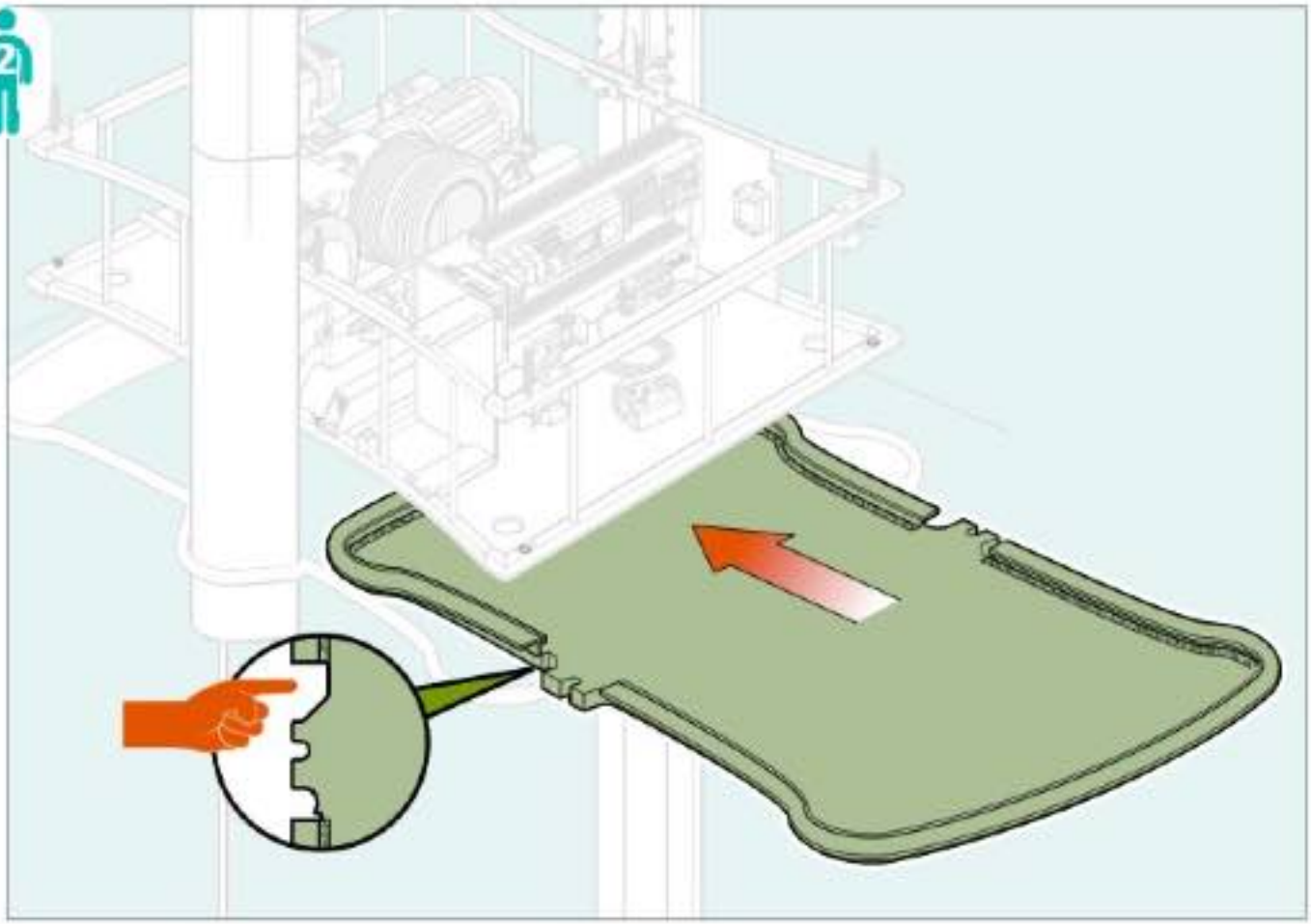

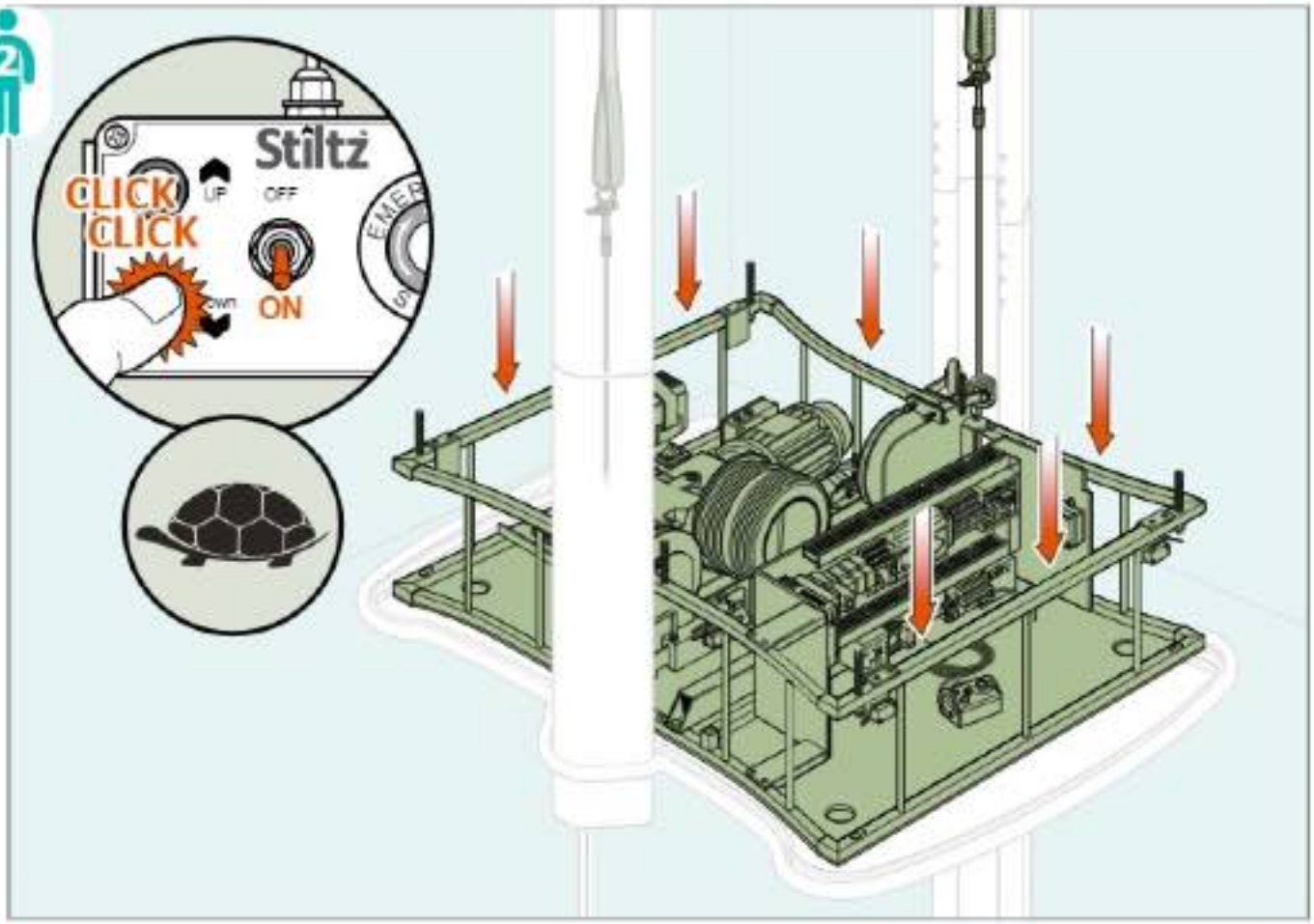
2
Stiltz
CLICK
CLICK
UP
OFF
ON

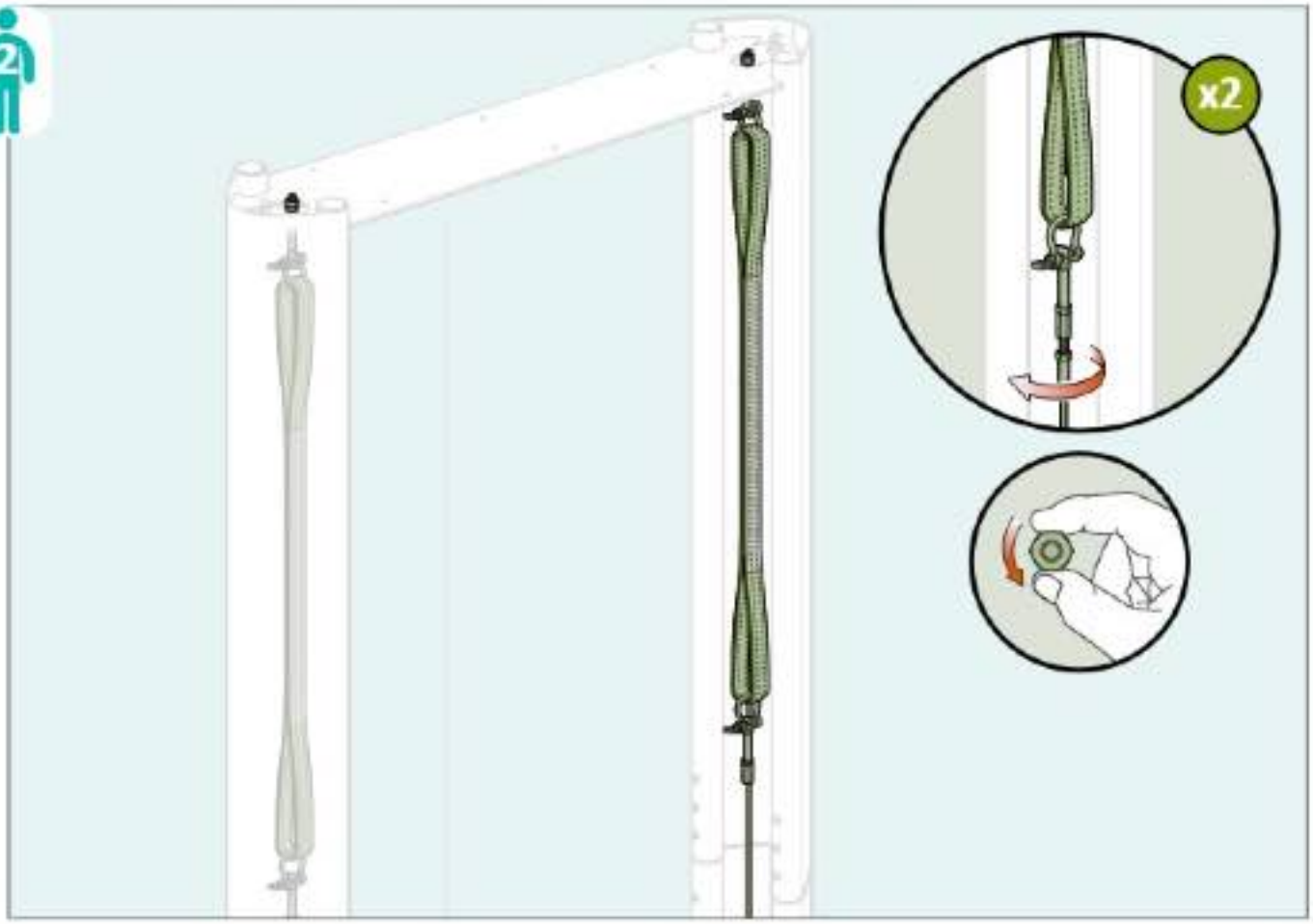
2
x2

Section 4: Hoist Preparation

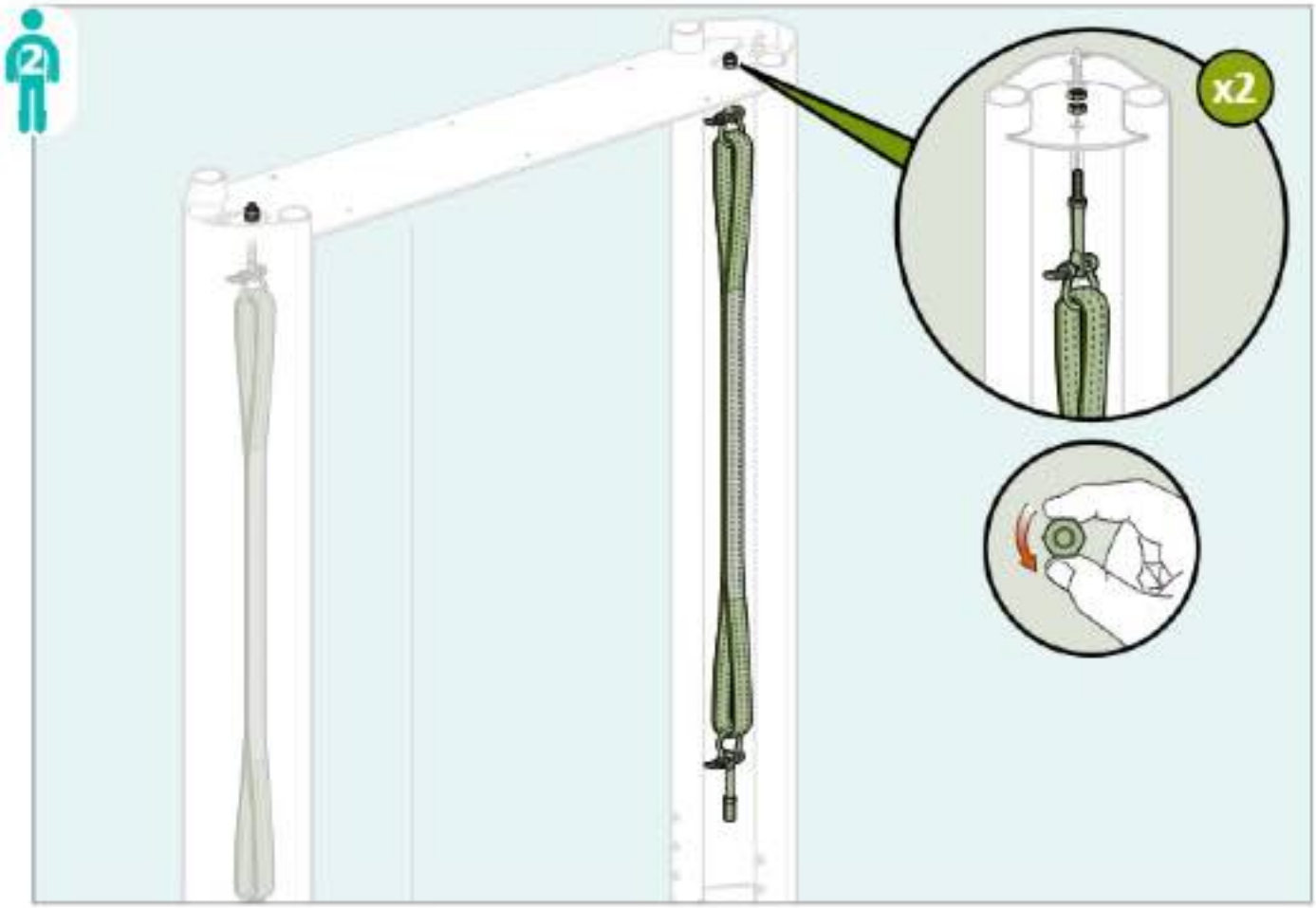

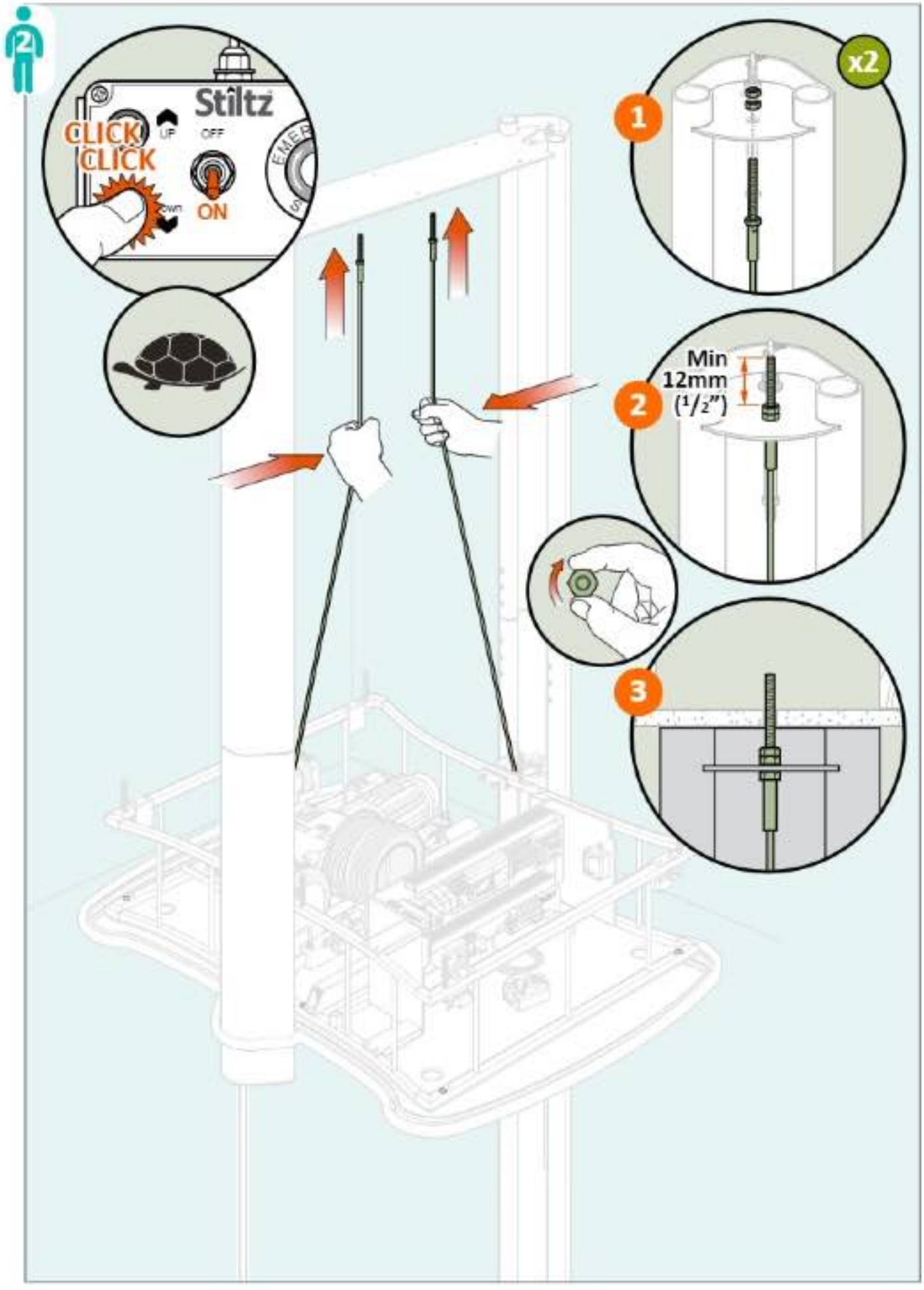
2
Stiltz
CLICK
CLICK
UP
OFF
ON
x2
1
Min
12mm
(1/2")
2
3

Installation Guidelines

Stiltz™ Homelifts

SECTION 5
Car Preparation

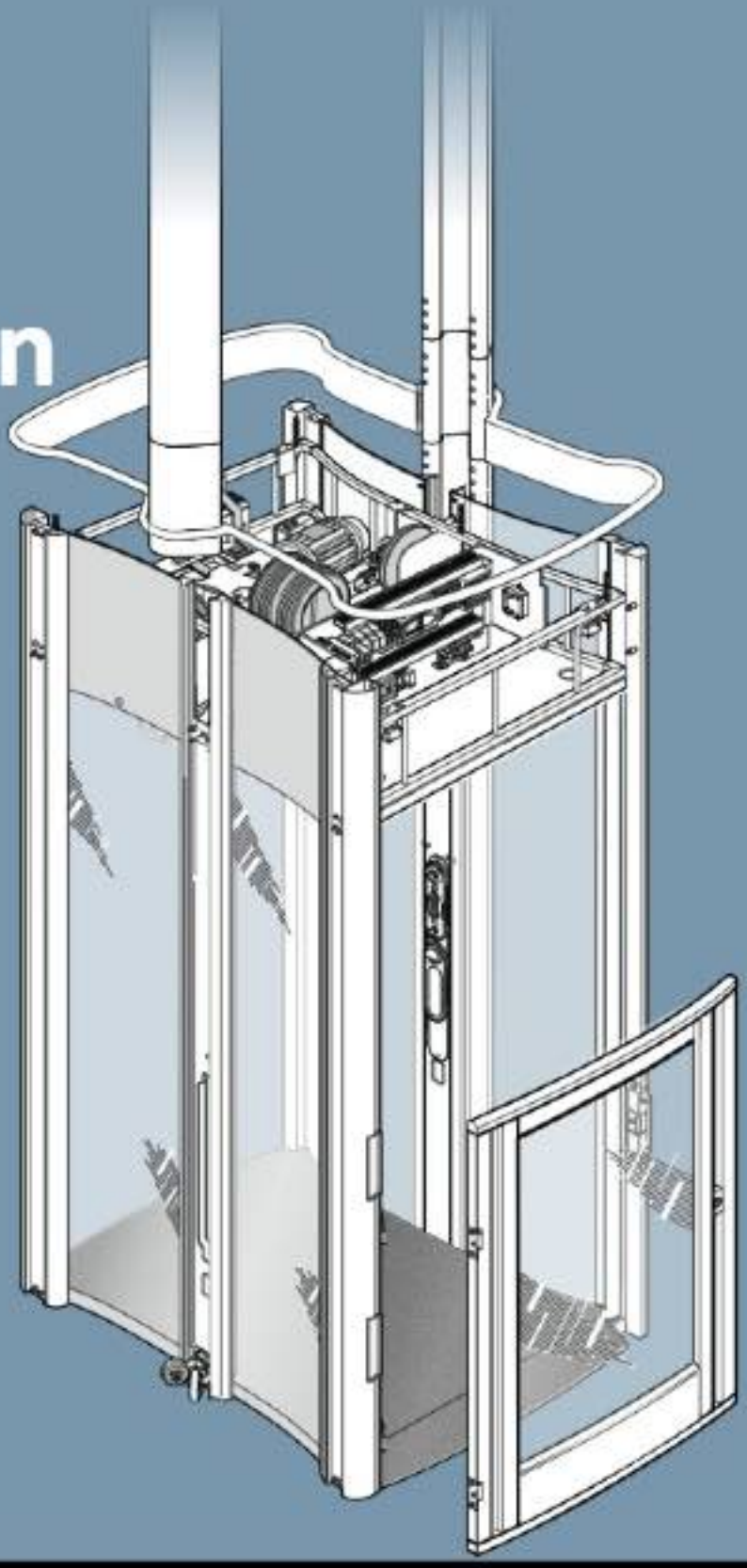

INSTALLATION GUIDELINES

Installation Guidelines

Supplied with Installation Kit (sold separately)

30113-00048
T Type Allen Key 4mm



Tools Required

Socket Wrench + Sockets



Power Drill



Allen Keys (Metric)



Cross Screwdriver



Spanners



Stanley Knife



Steps



PH2 +PH3 Bits

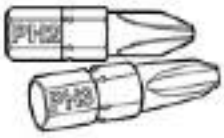

Long Nose Pliers



Socket Wrench Extension



Nut Drivers



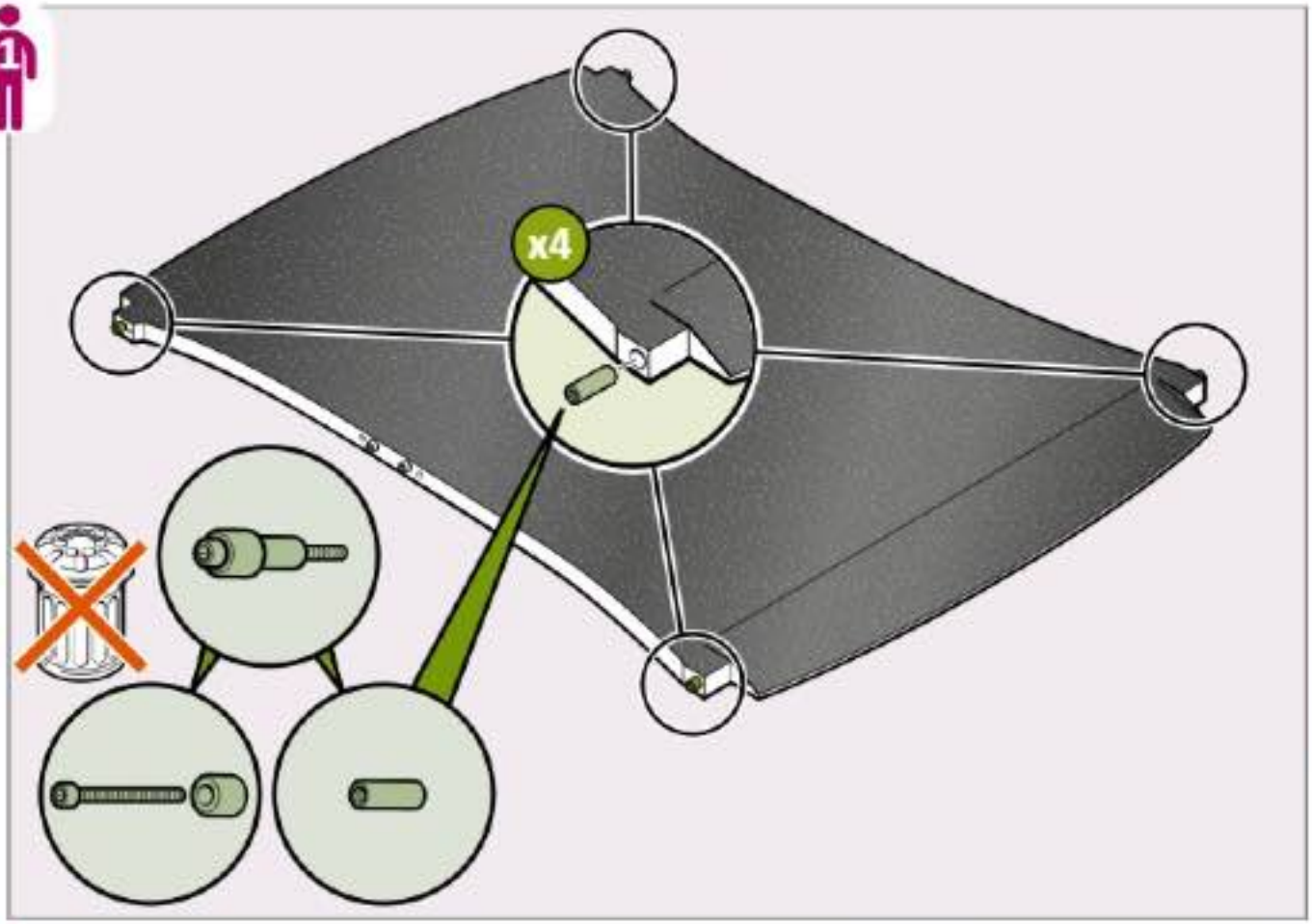
x4

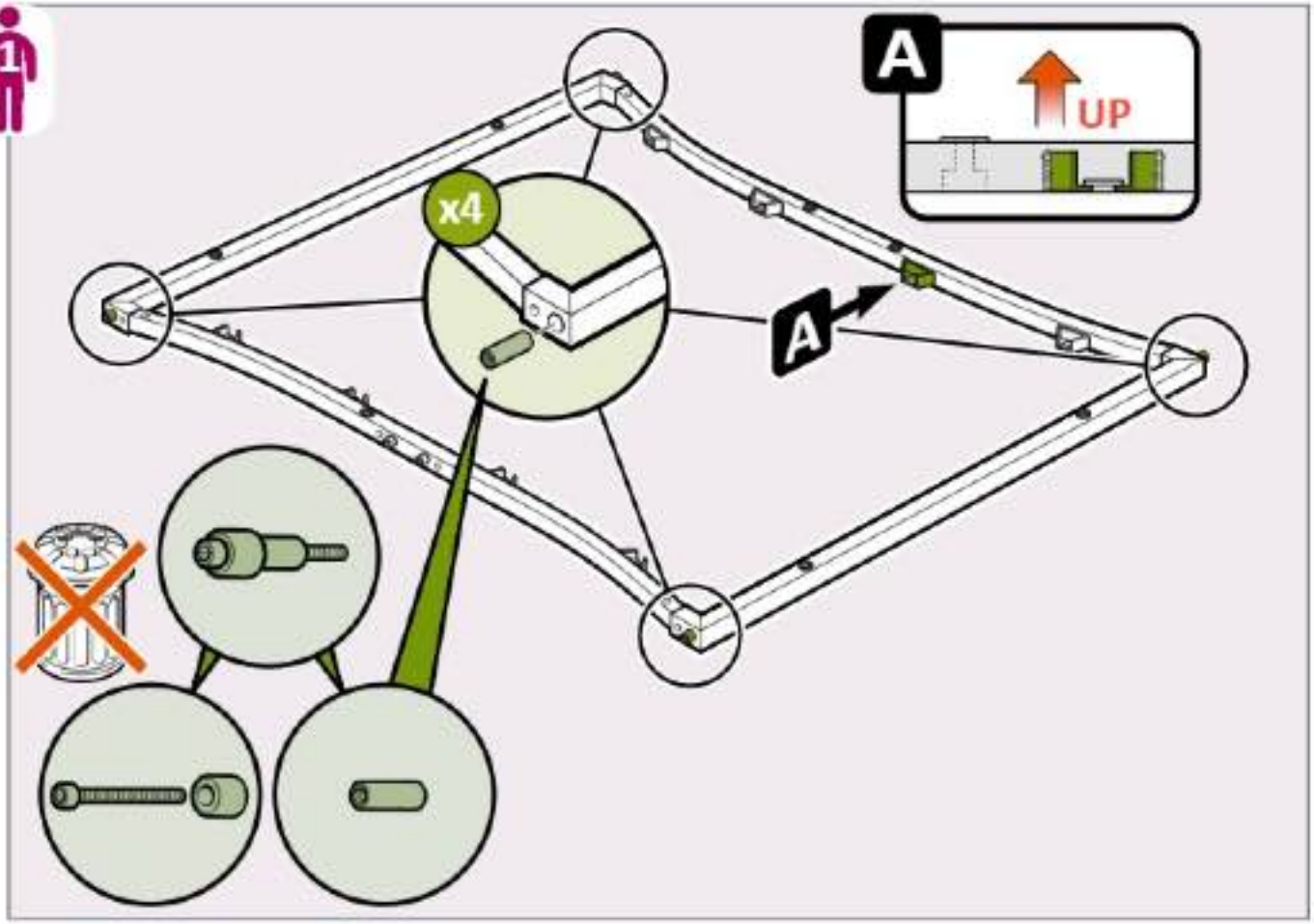
A
UP
x4
A

Section 5: Car Preparation

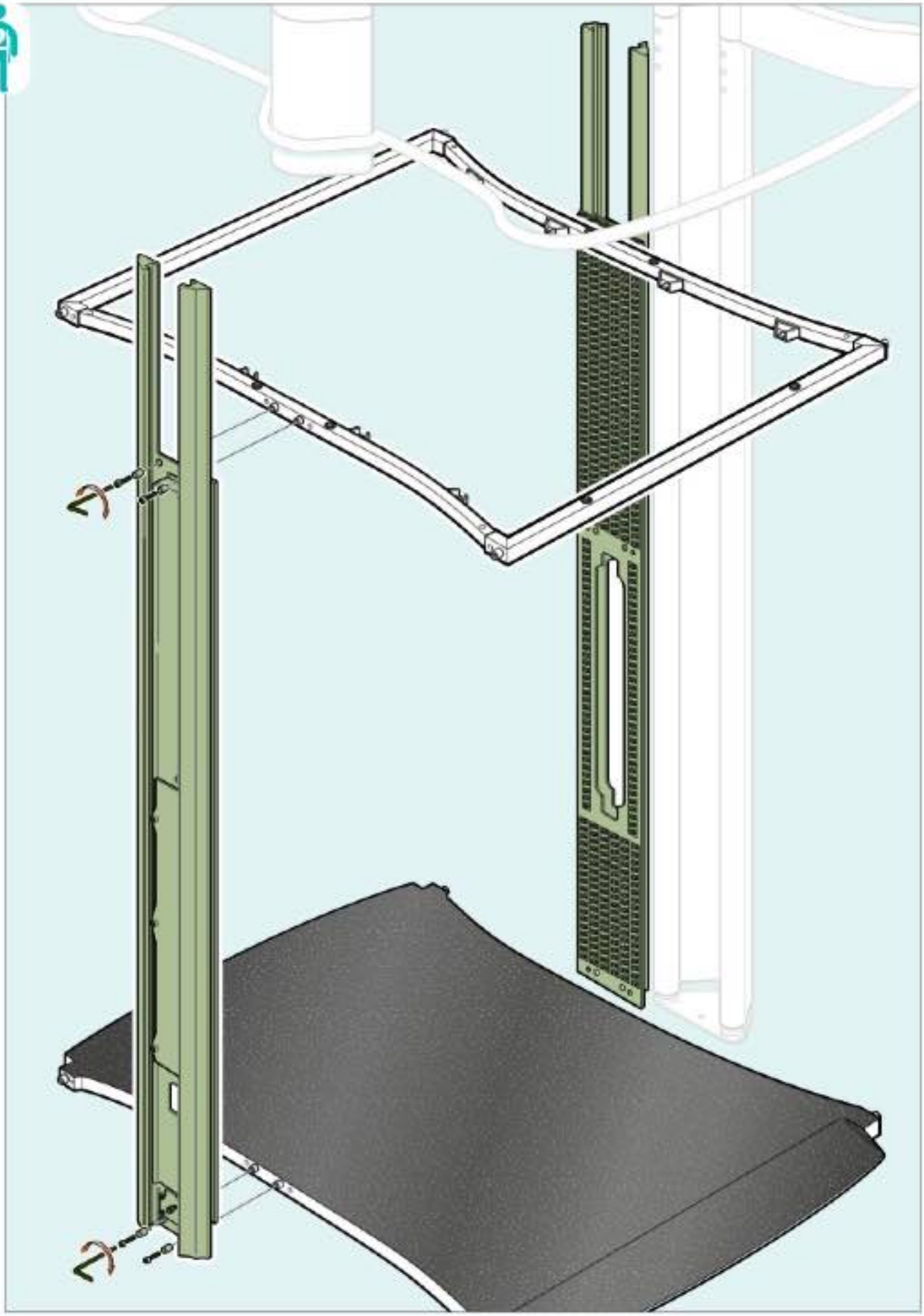

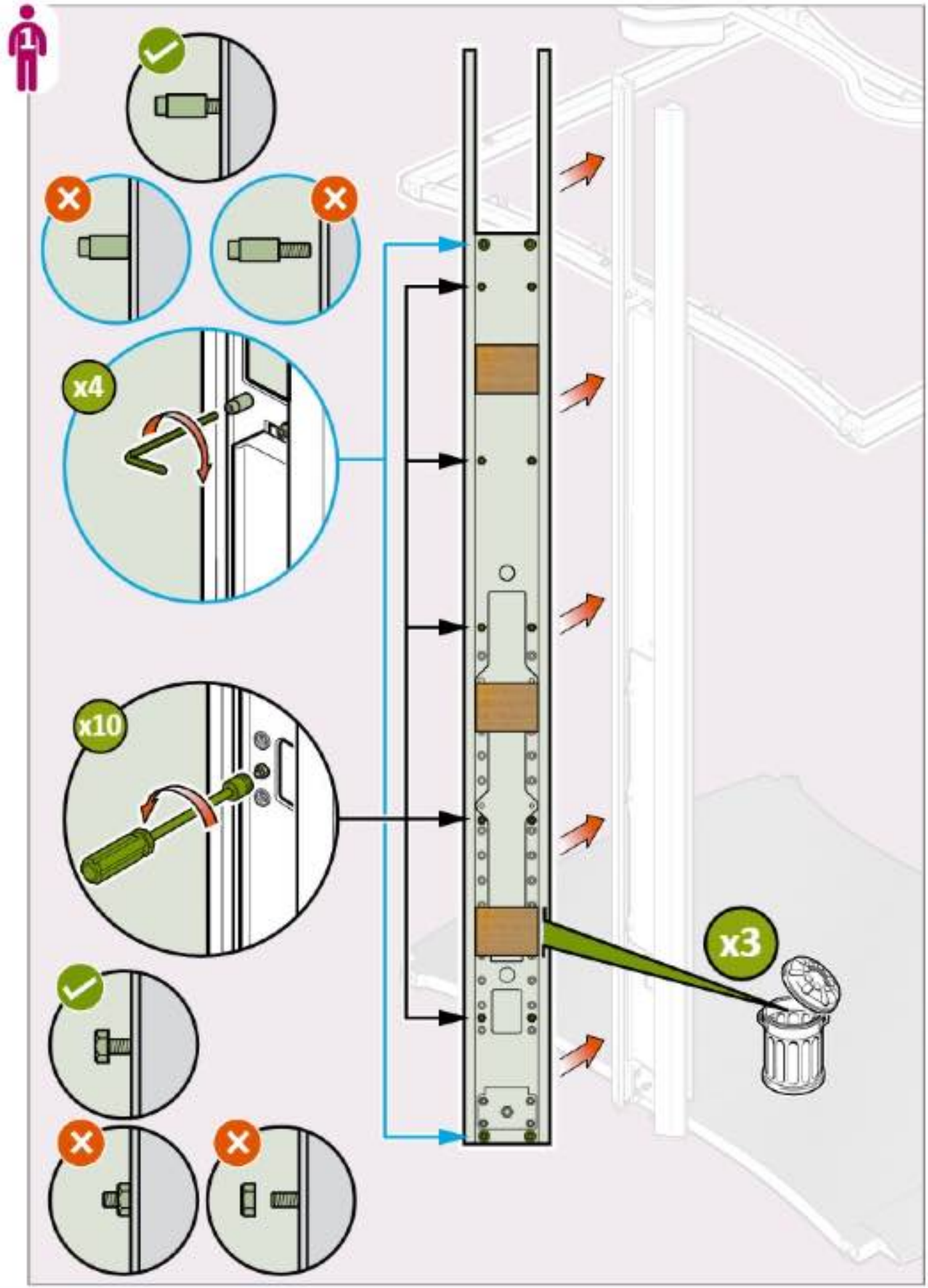
x4
x10
x3

Section 5: Car Preparation

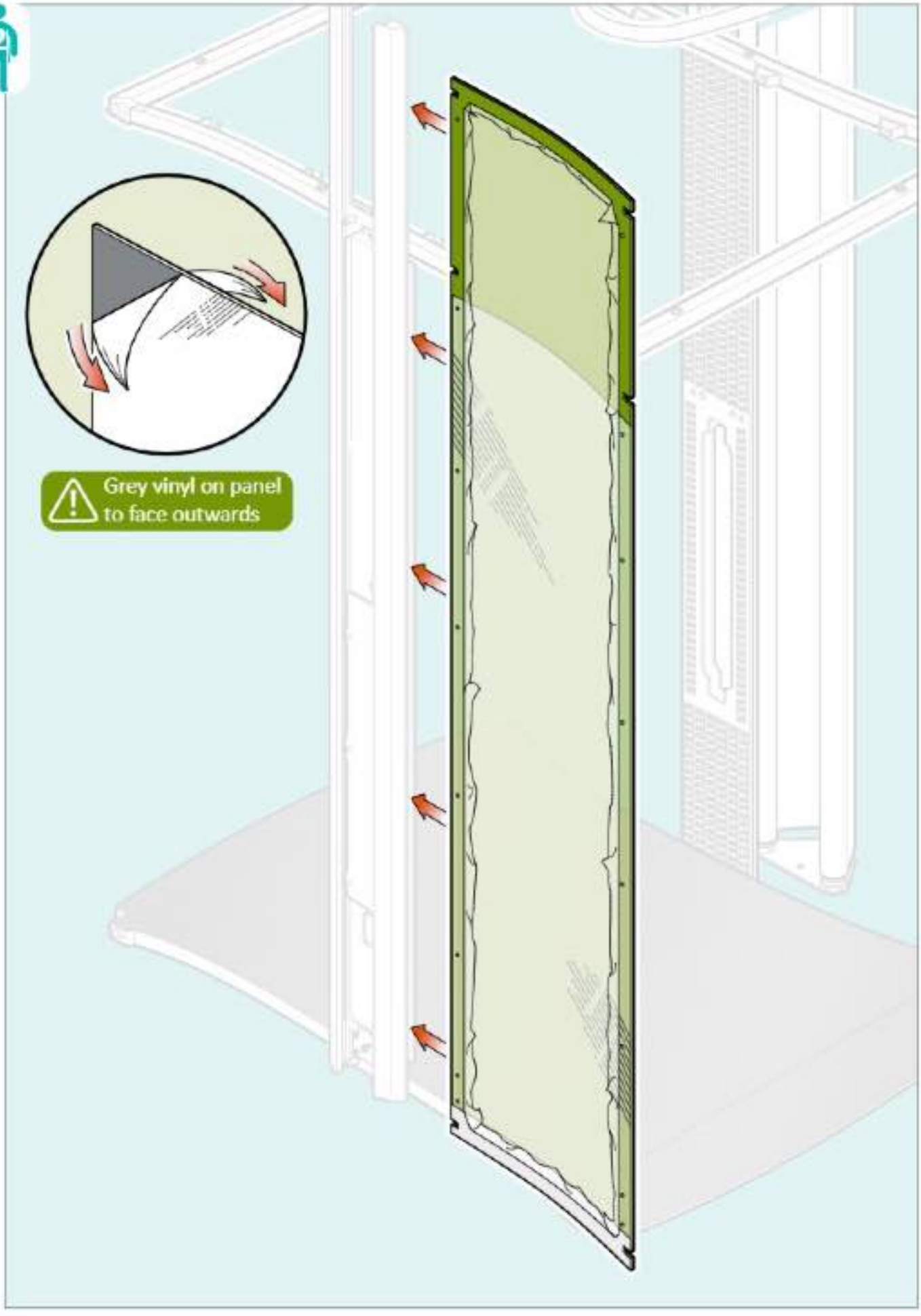

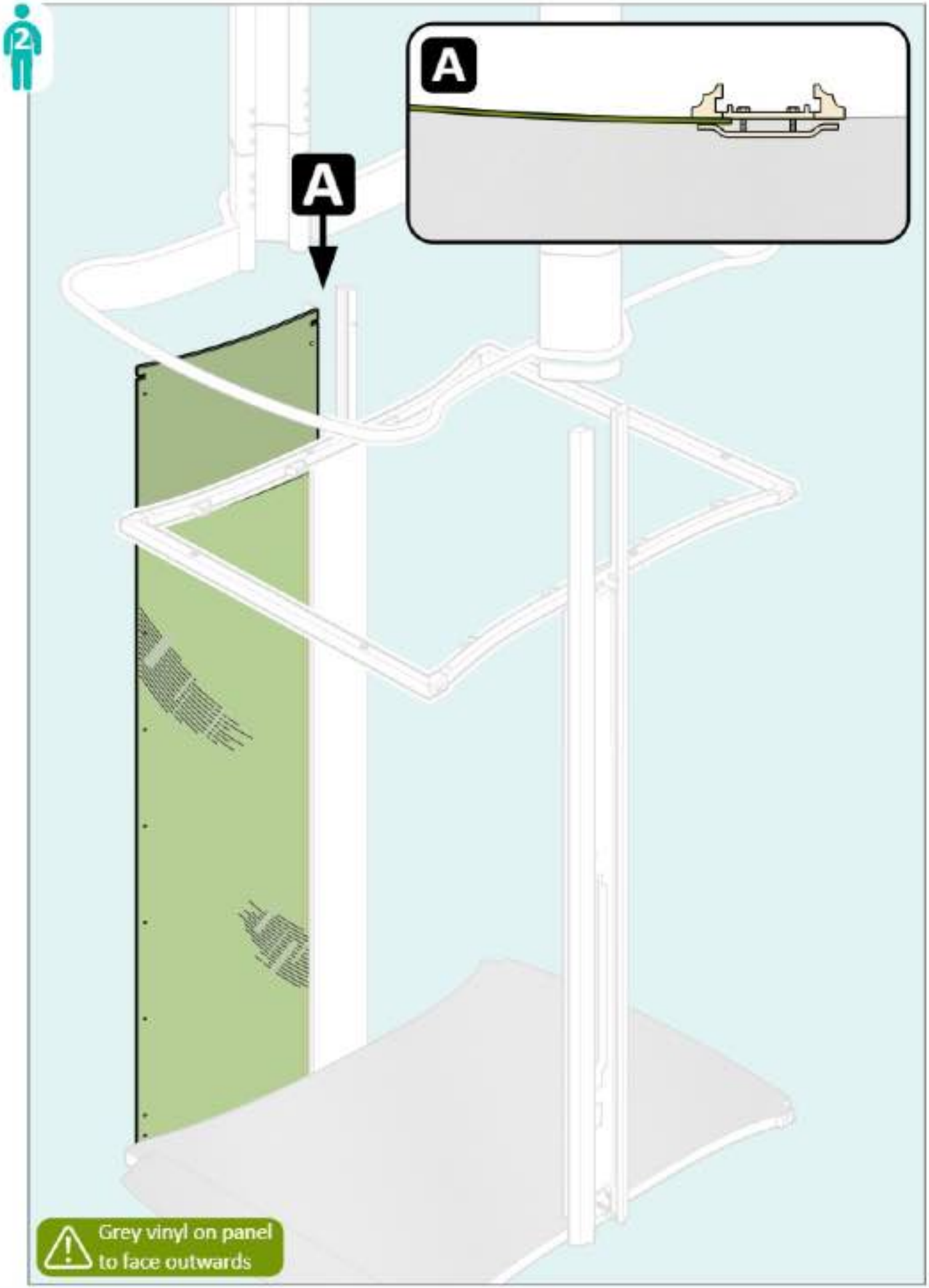
2
A
A
Grey vinyl on panel
to face outwards

Section 5: Car Preparation

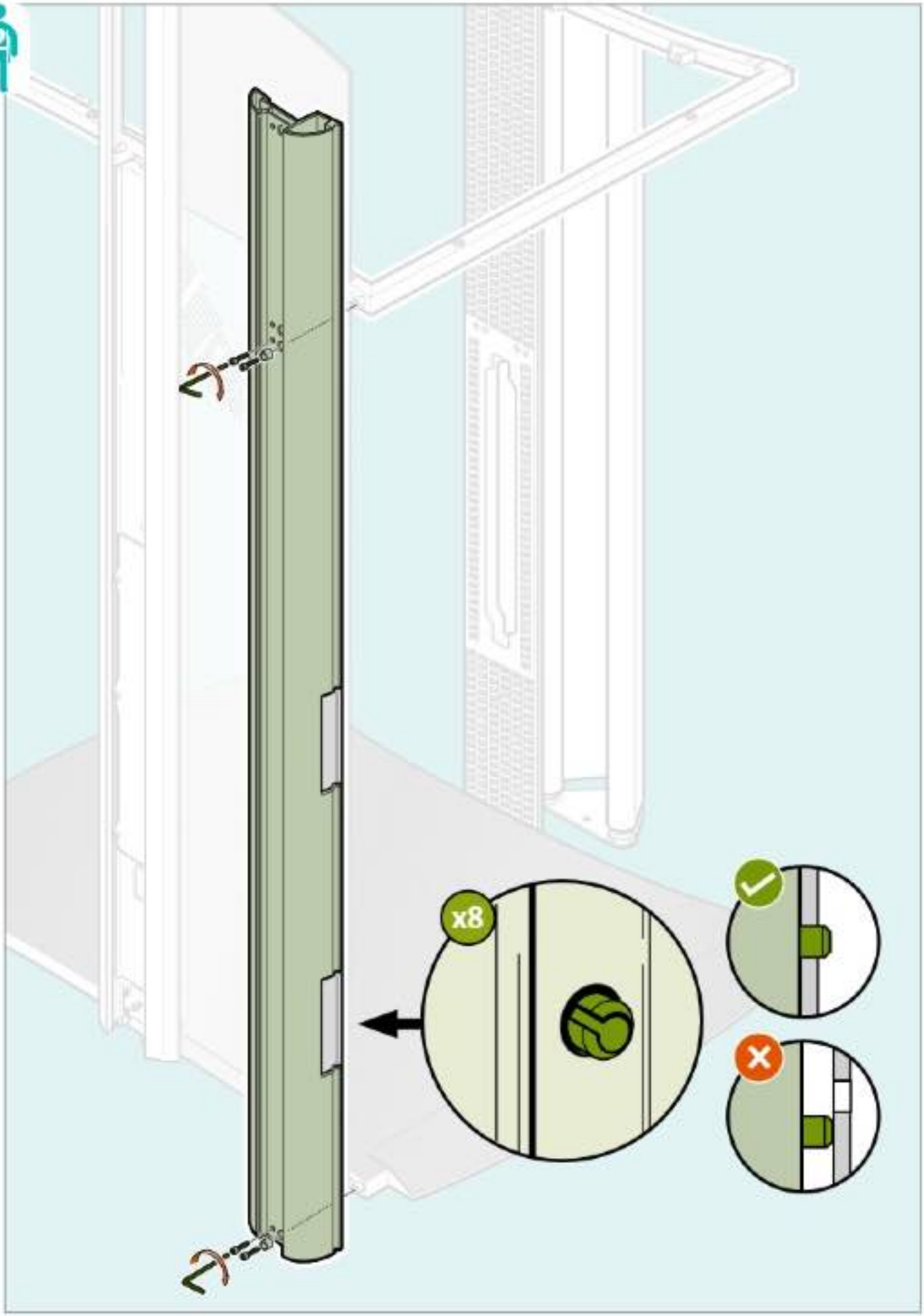

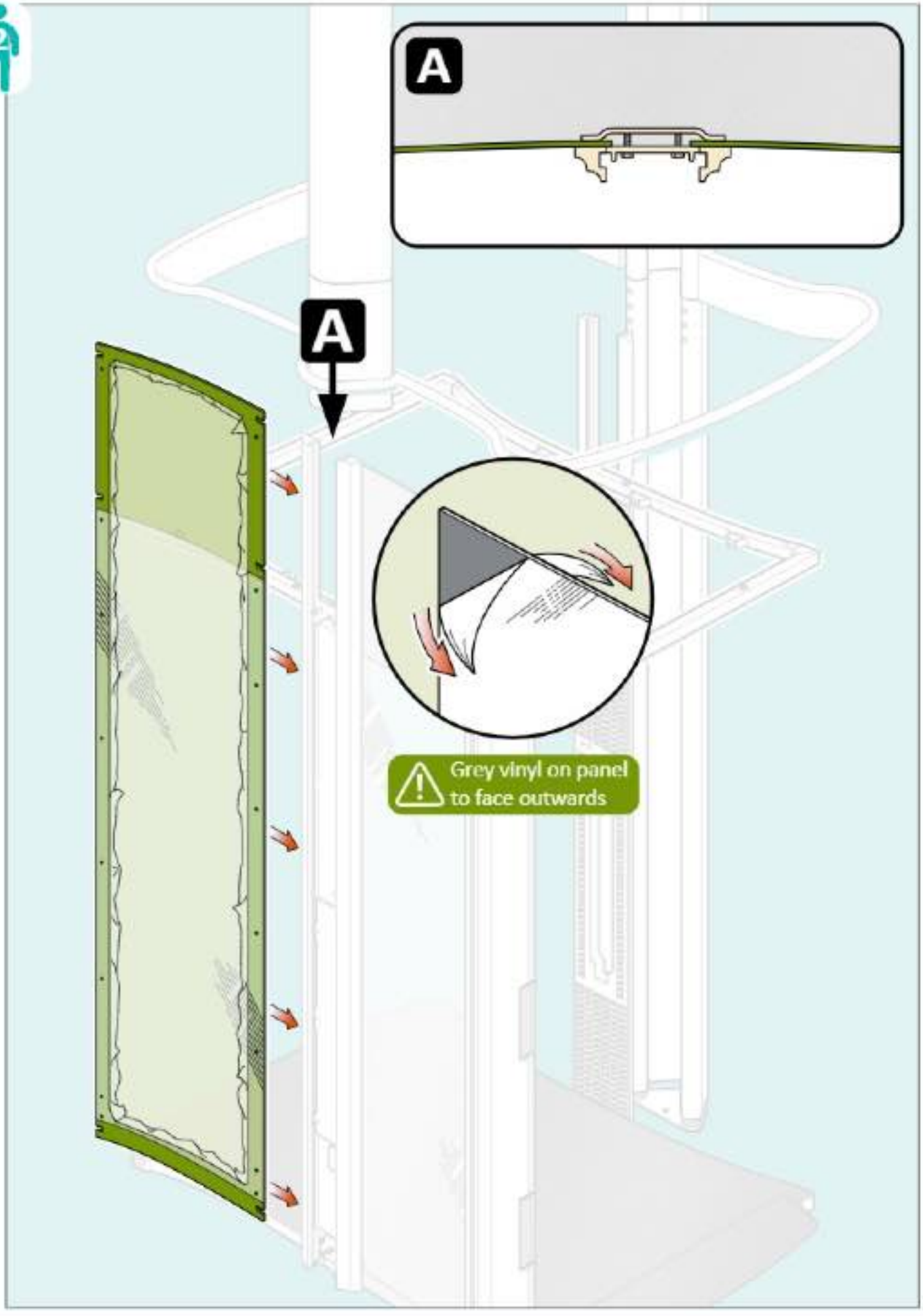
2
A
A
Grey vinyl on panel
to face outwards

Section 5: Car Preparation

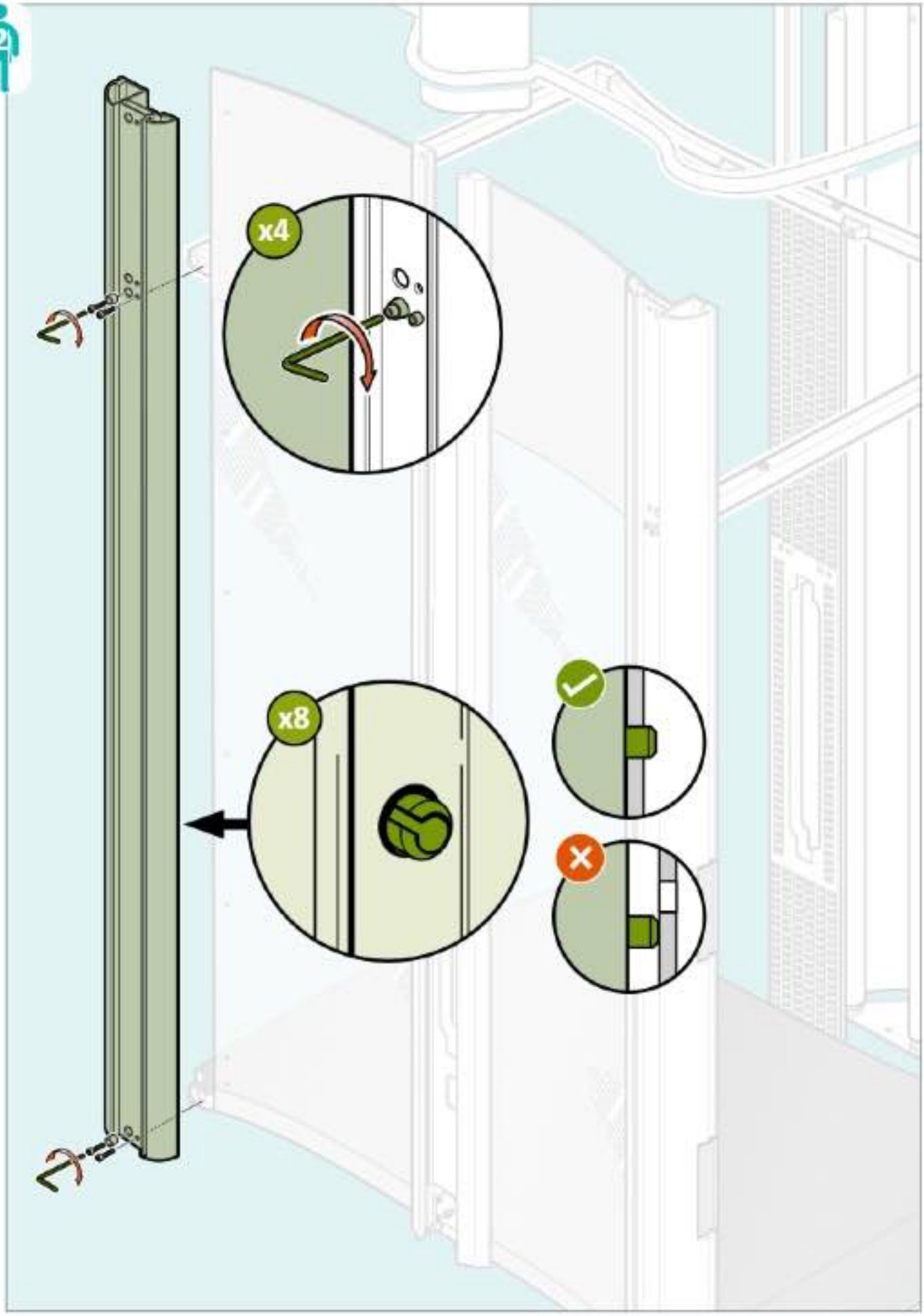

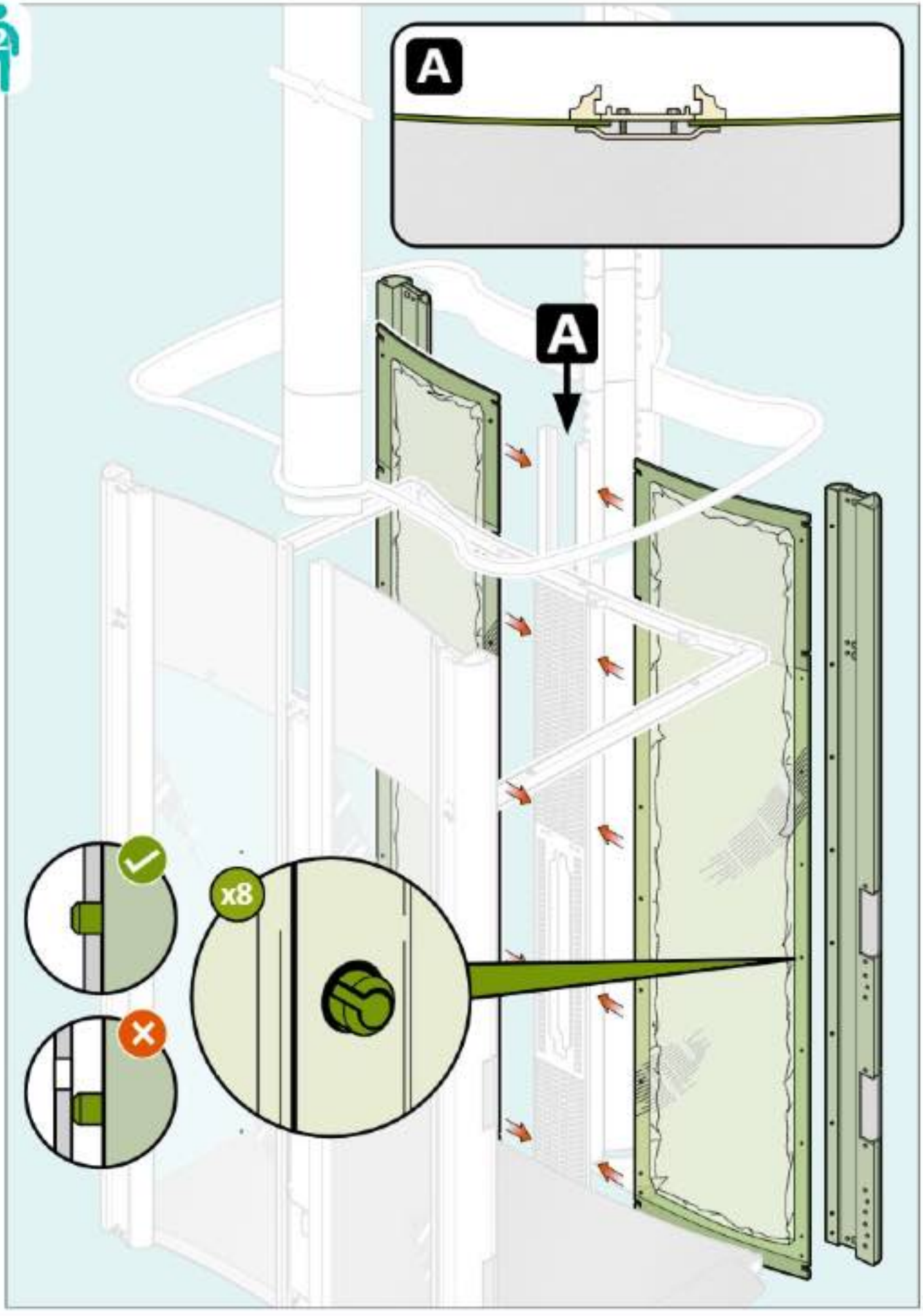
2
A
A
x8

Section 5: Car Preparation

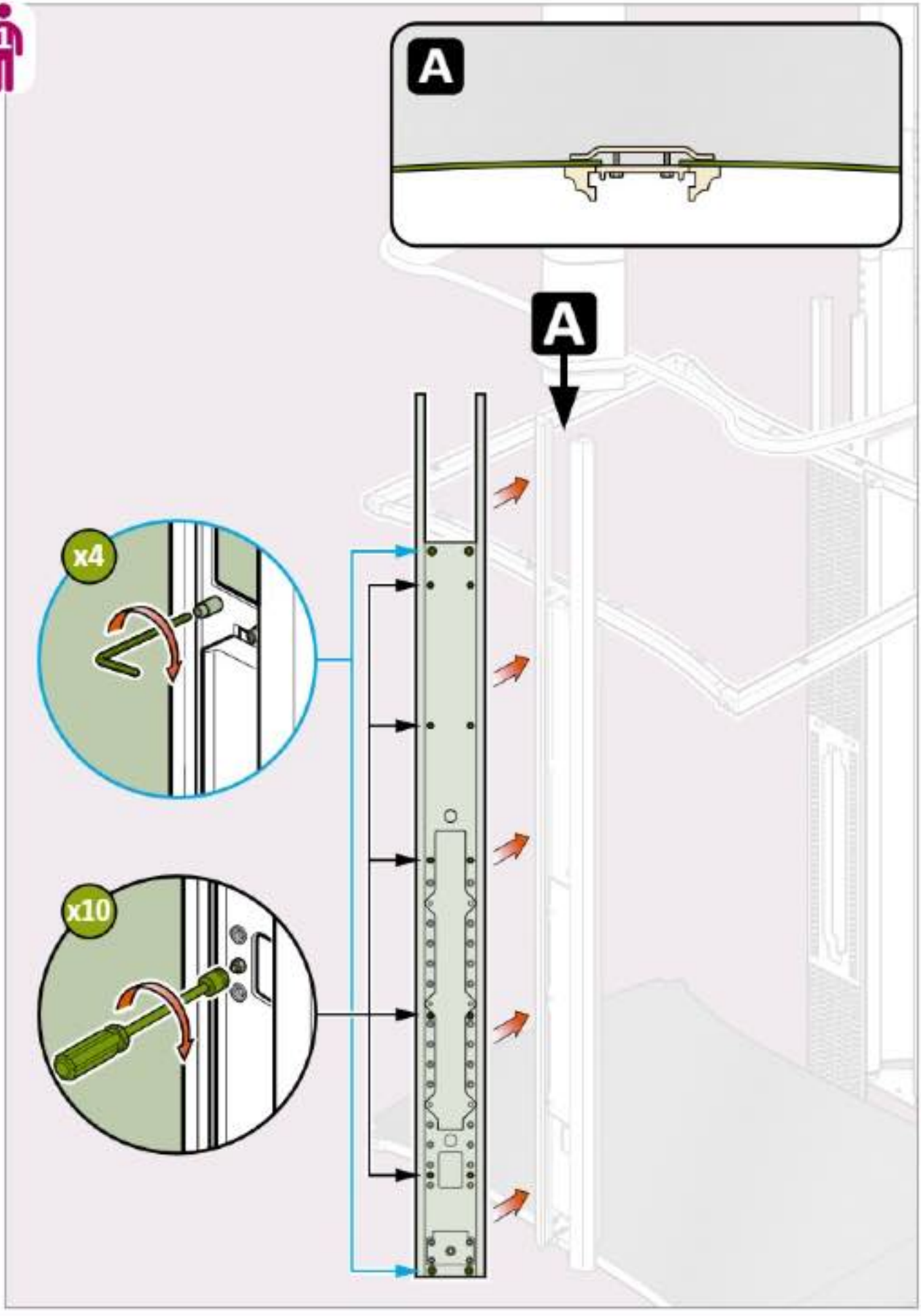

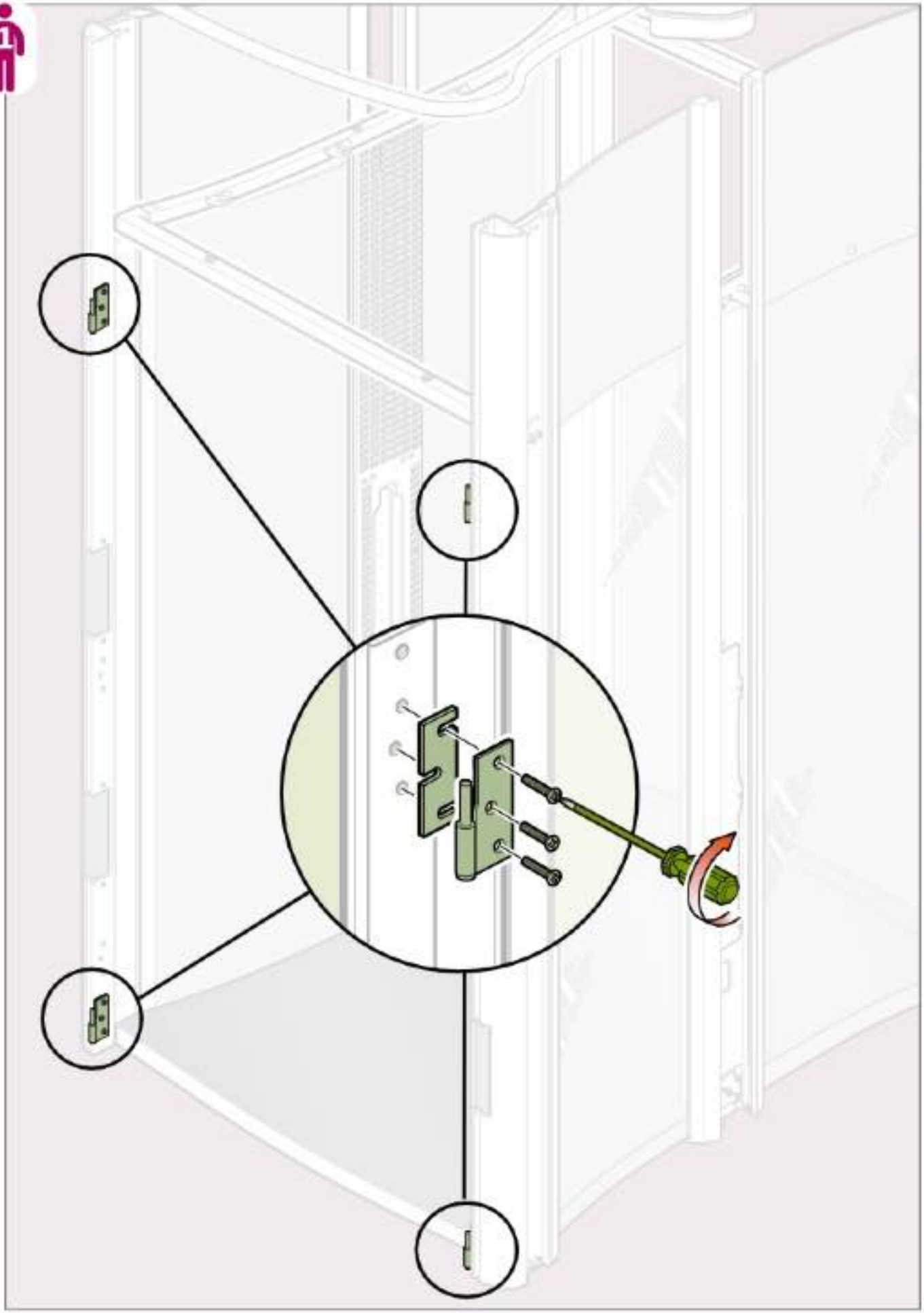

Section 5: Car Preparation

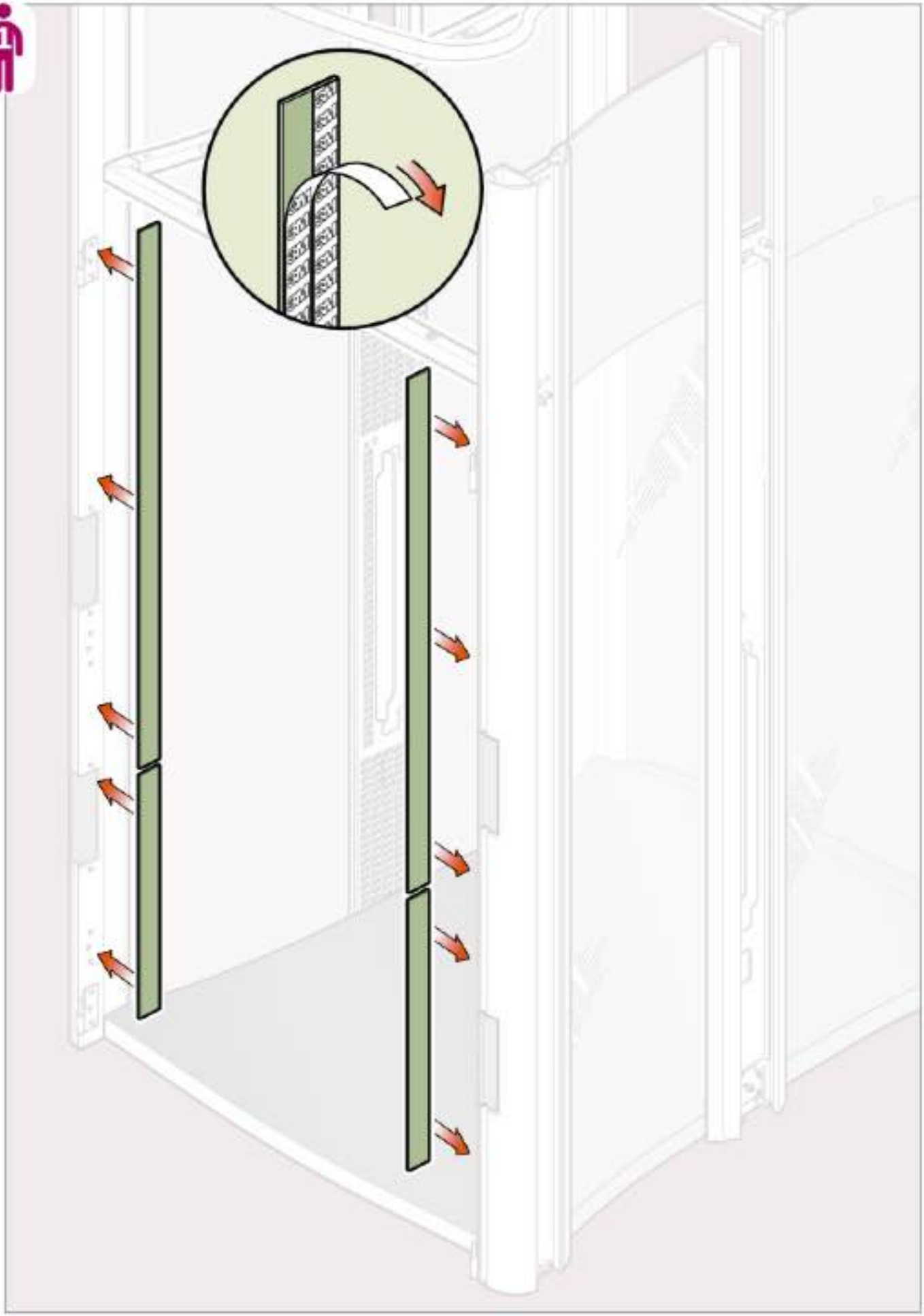

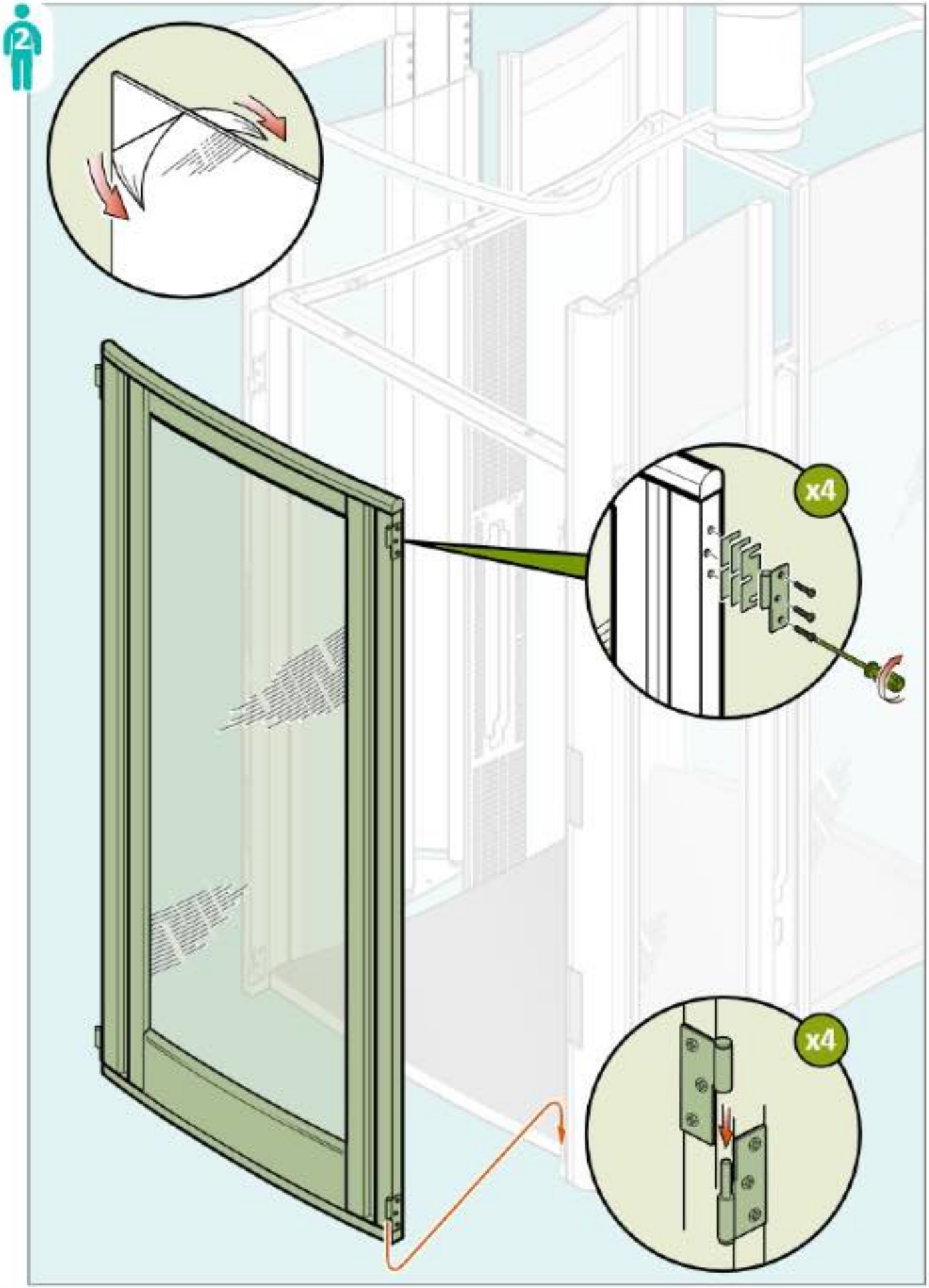
2
x4
x4

Section 5: Car Preparation

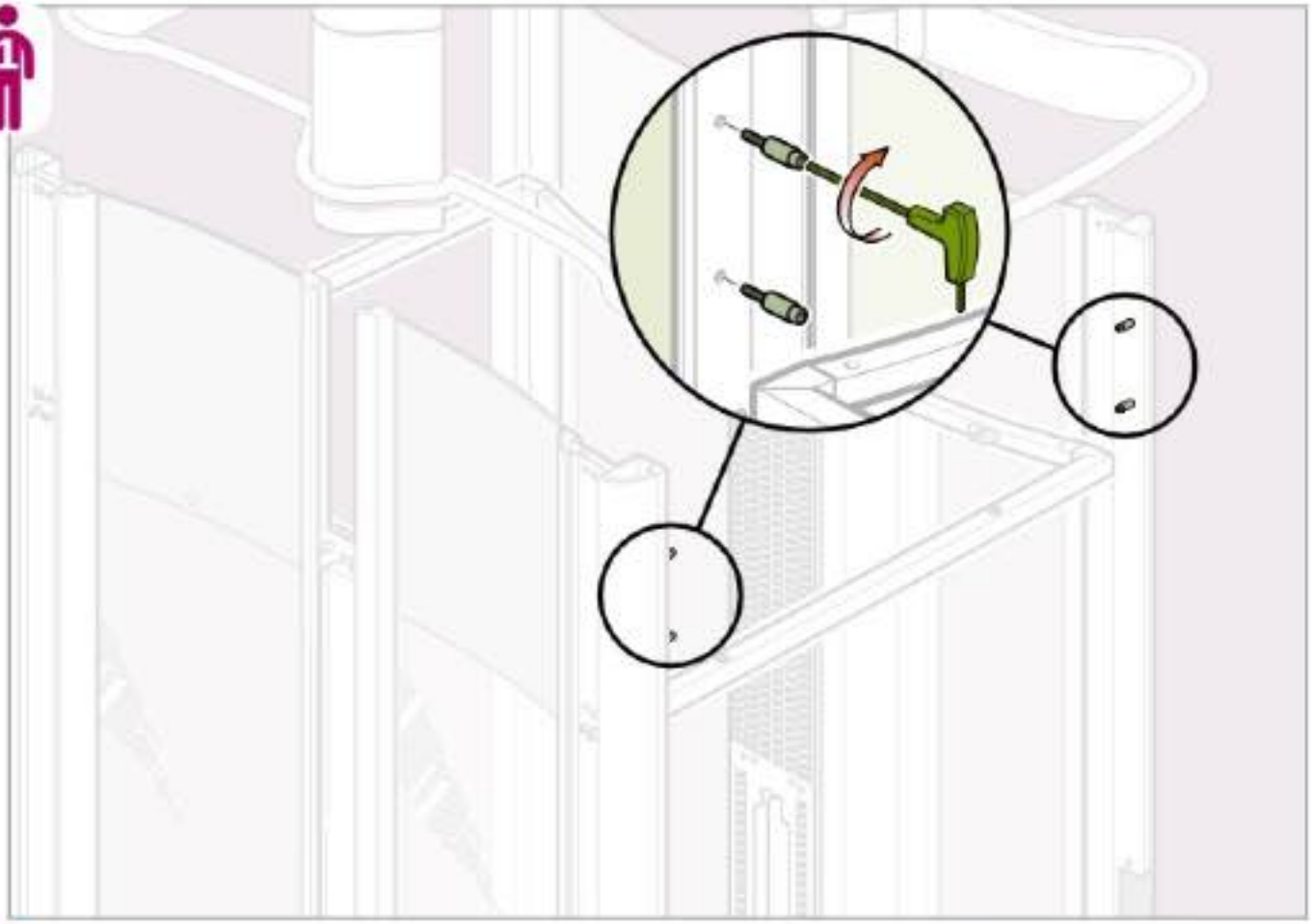

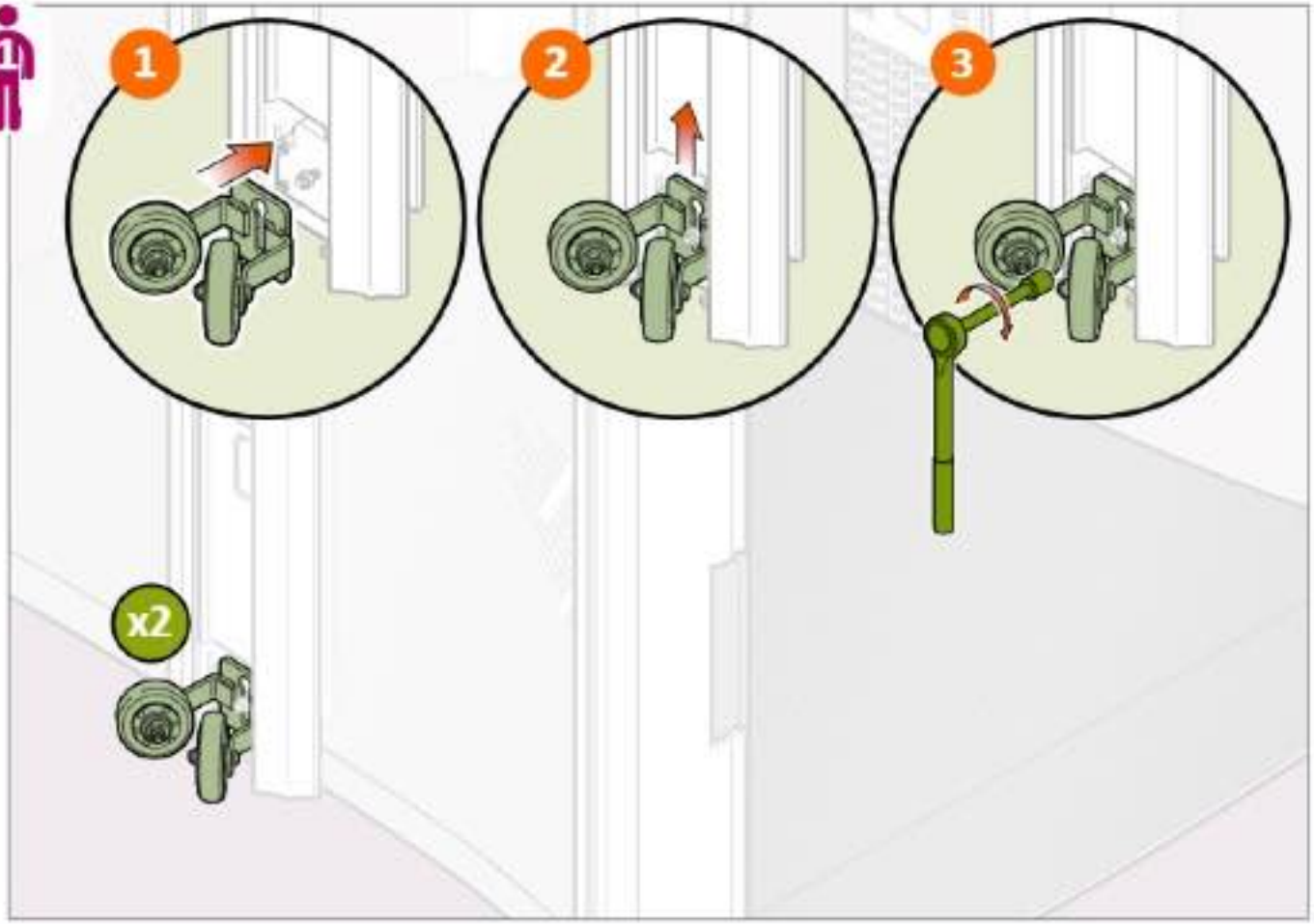

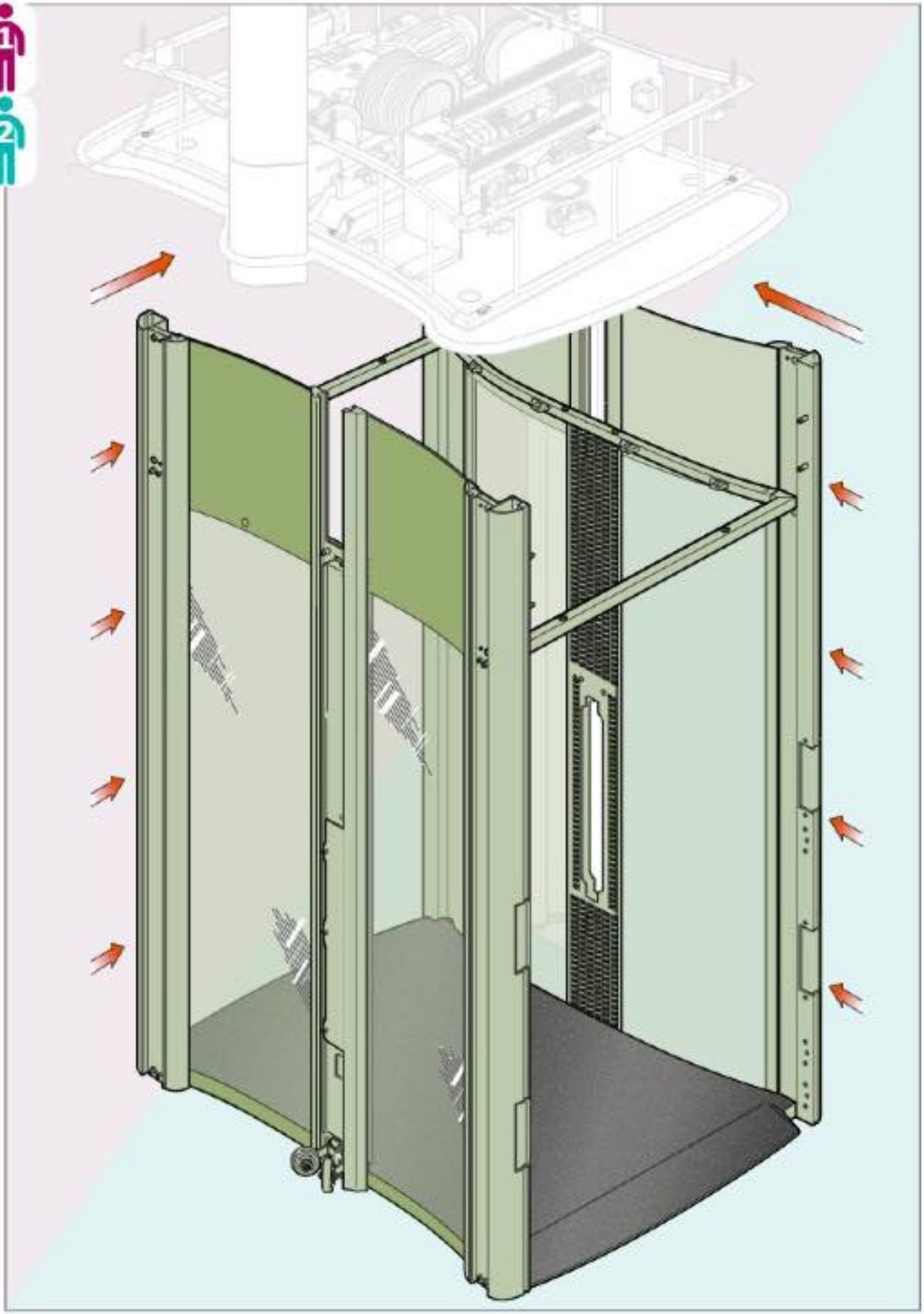

Section 5: Car Preparation



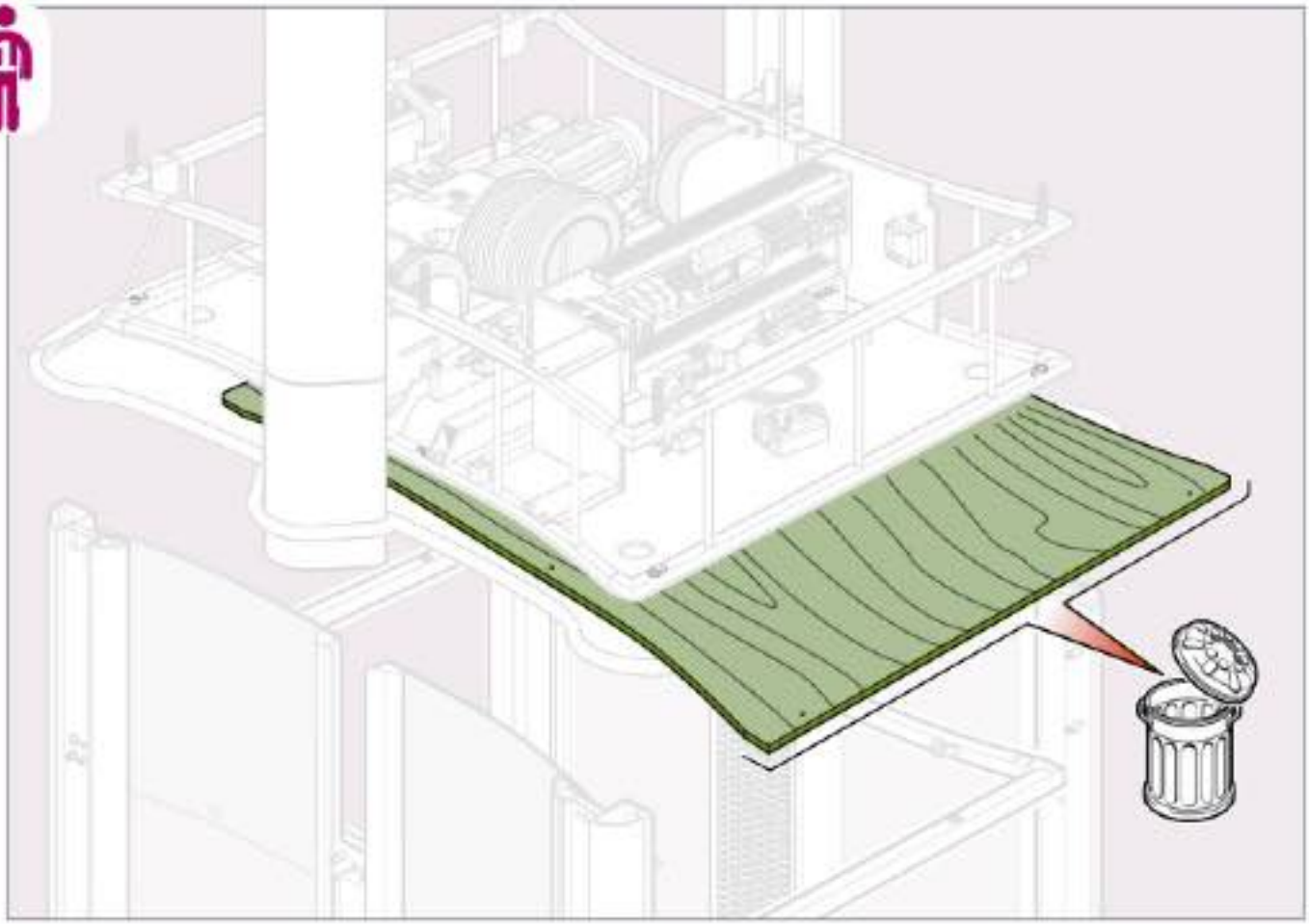

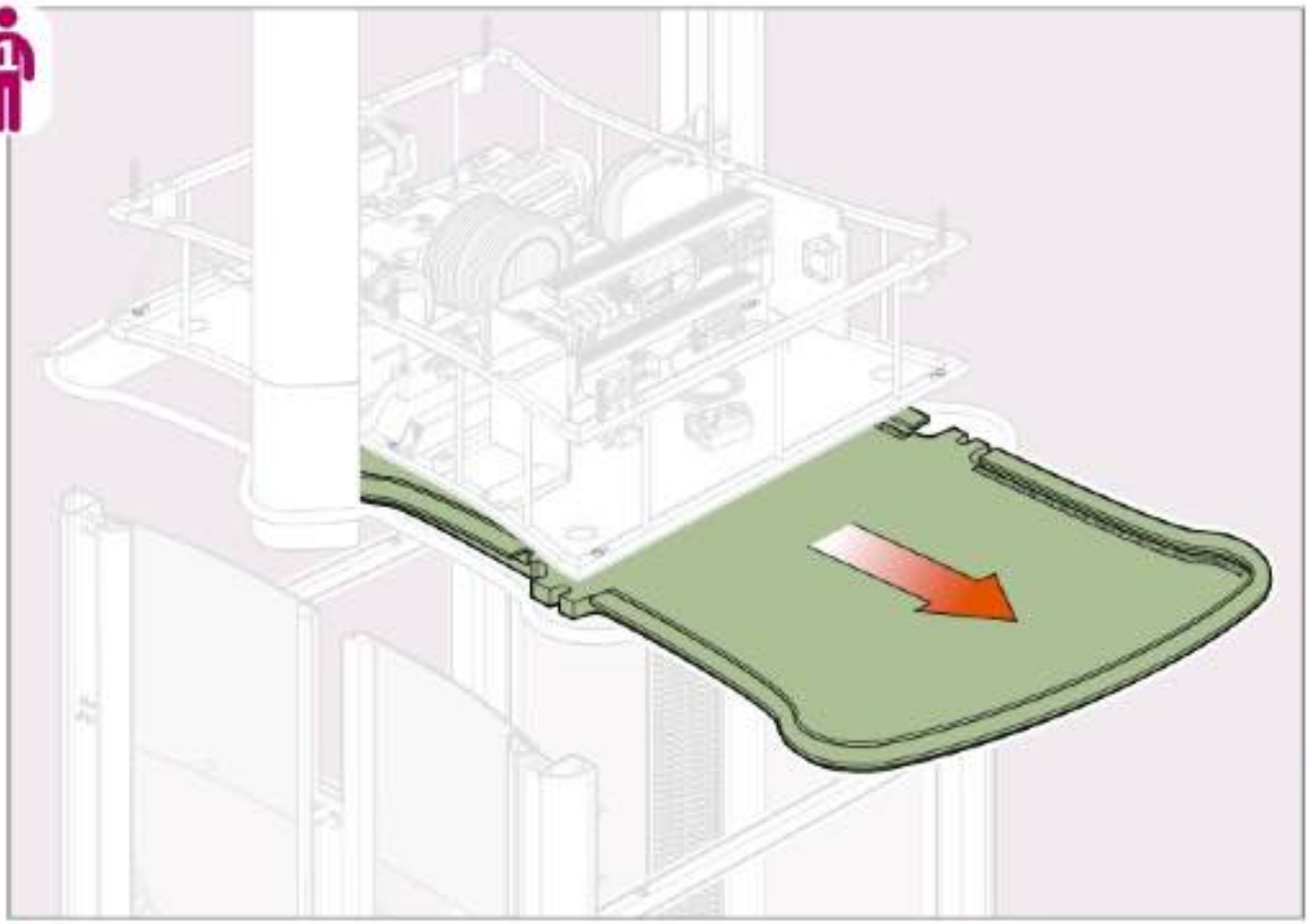

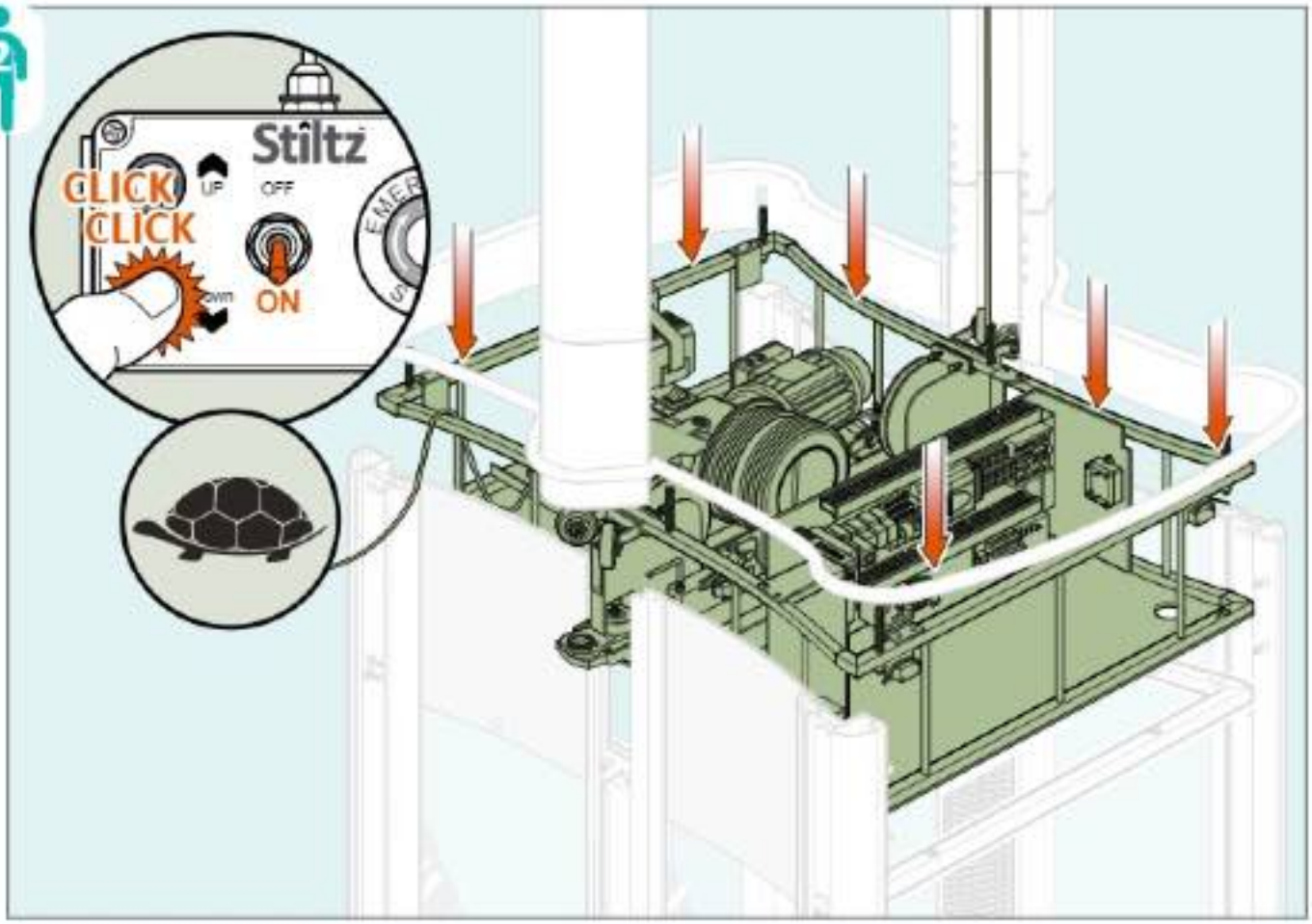
Stiltz
CLICK
CLICK
UP
OFF
ON

Section 5: Car Preparation

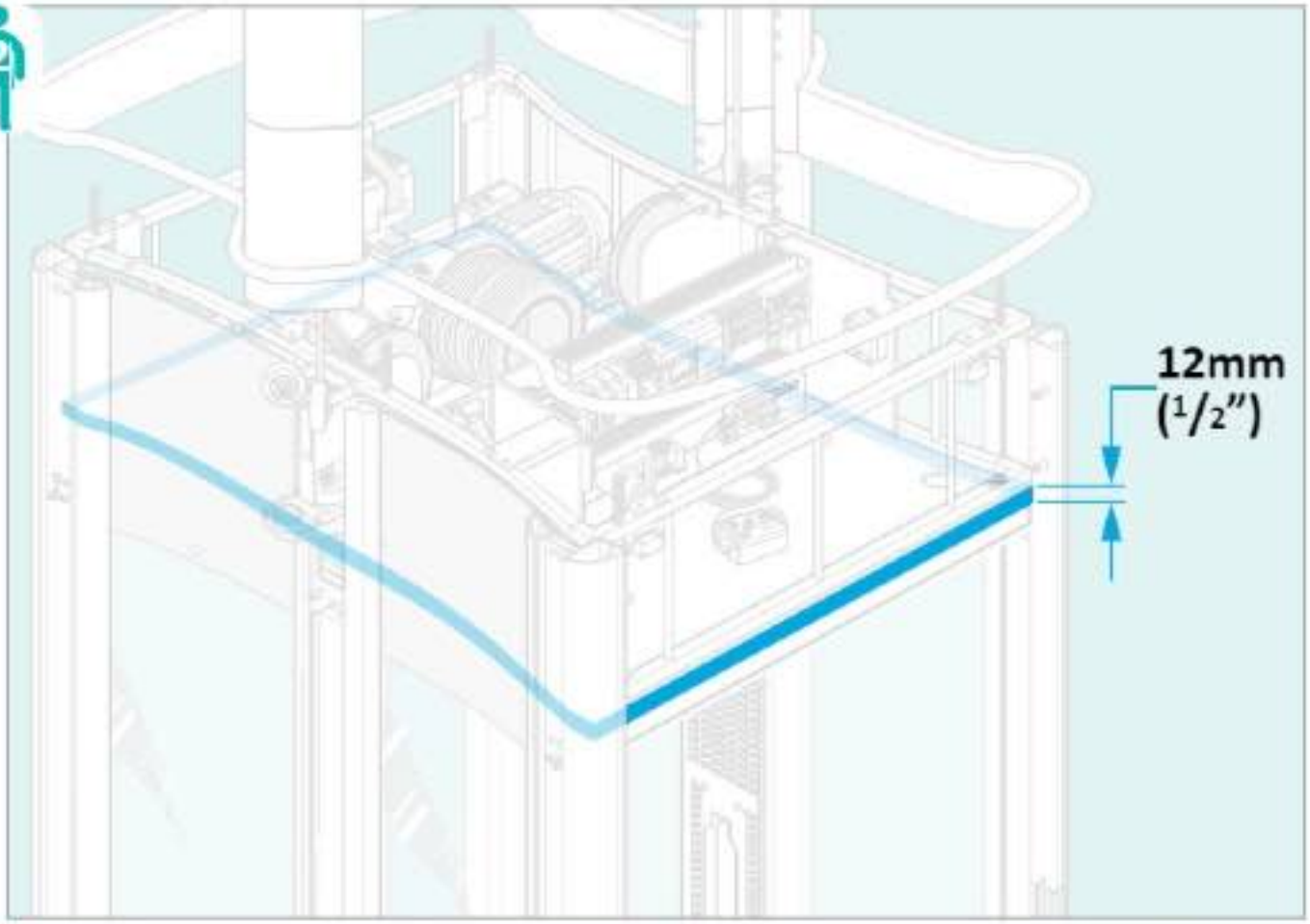

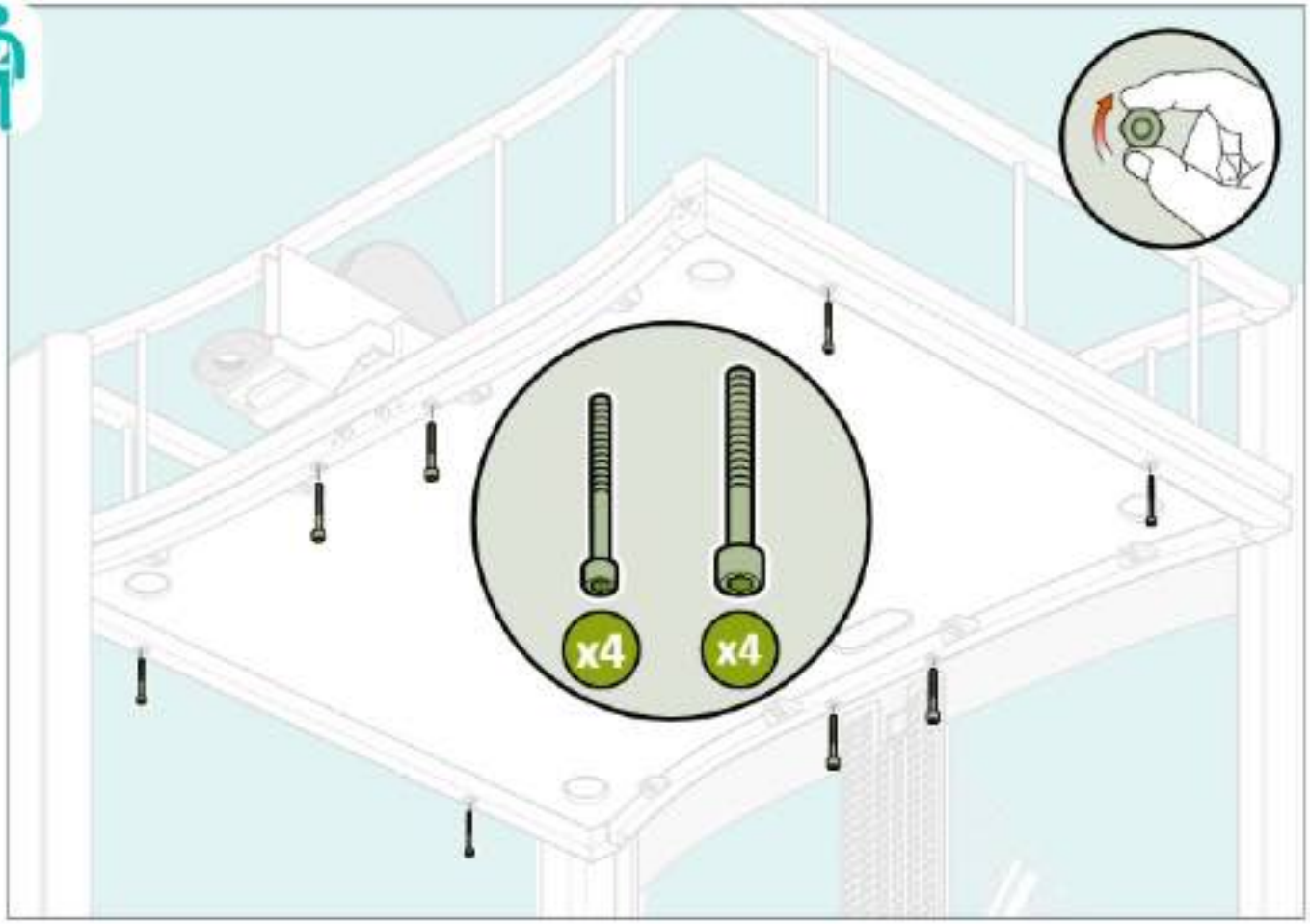

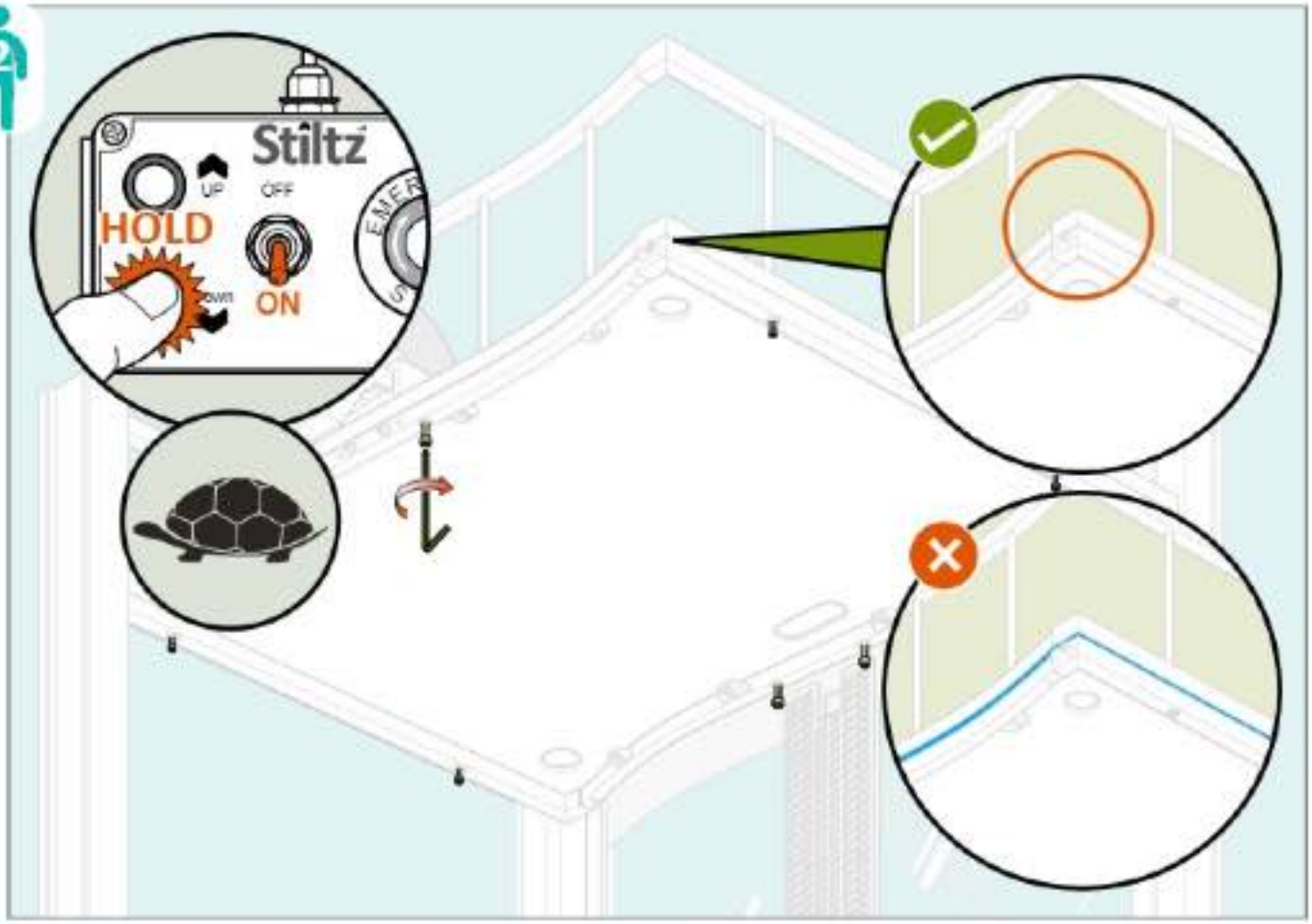
2
Stiltz
UP
OFF
HOLD
ON

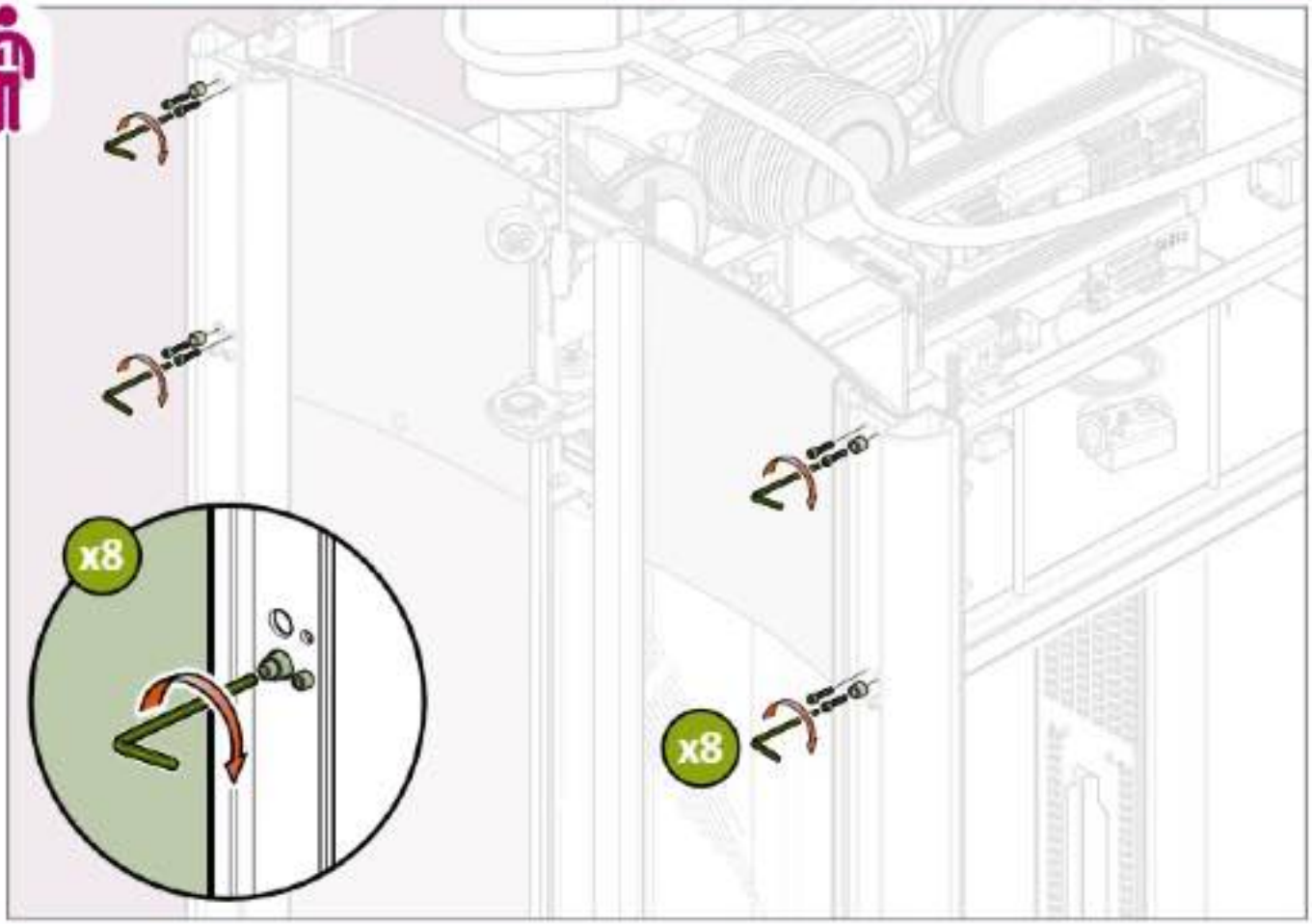
x8
x8

Section 5: Car Preparation

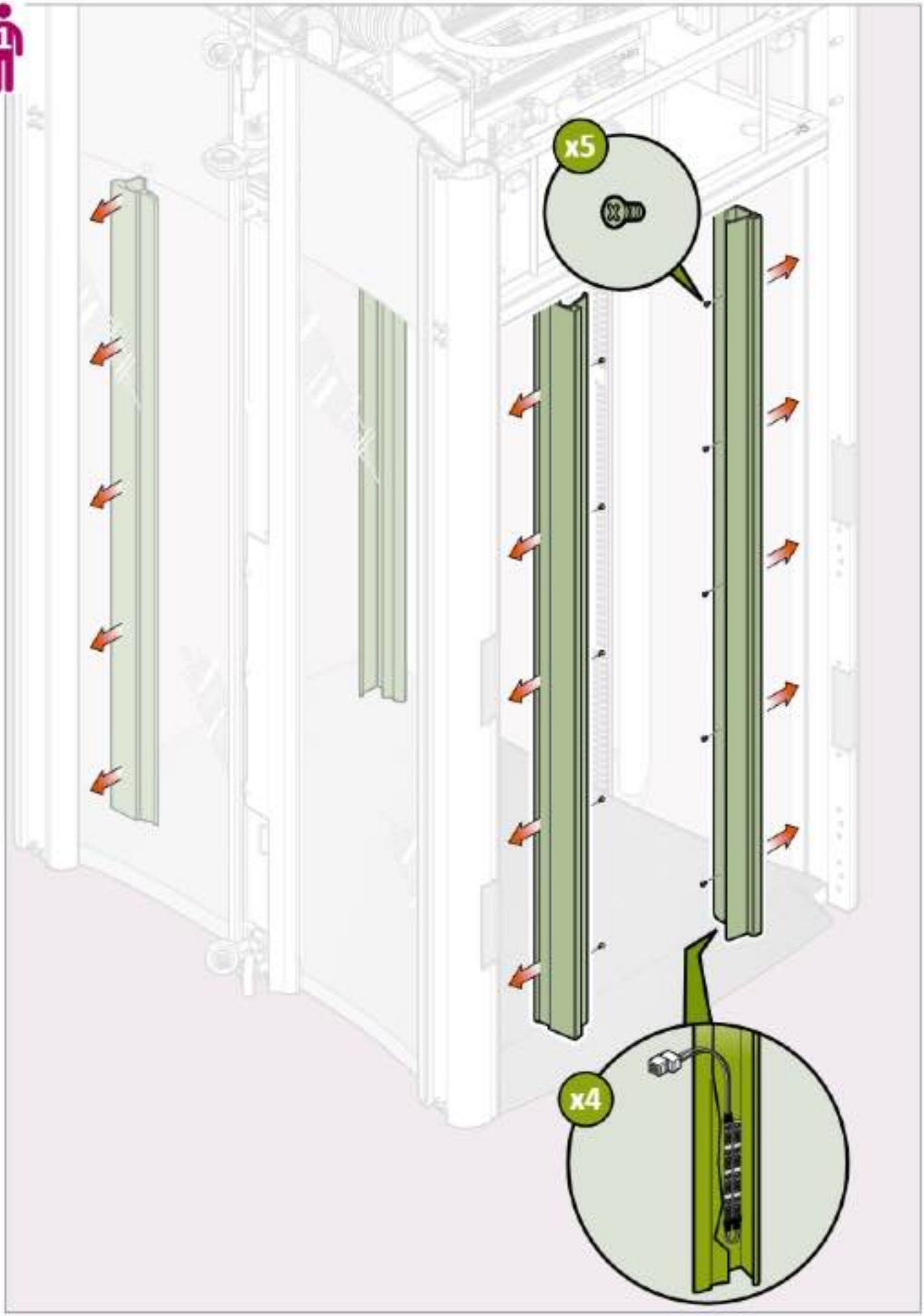

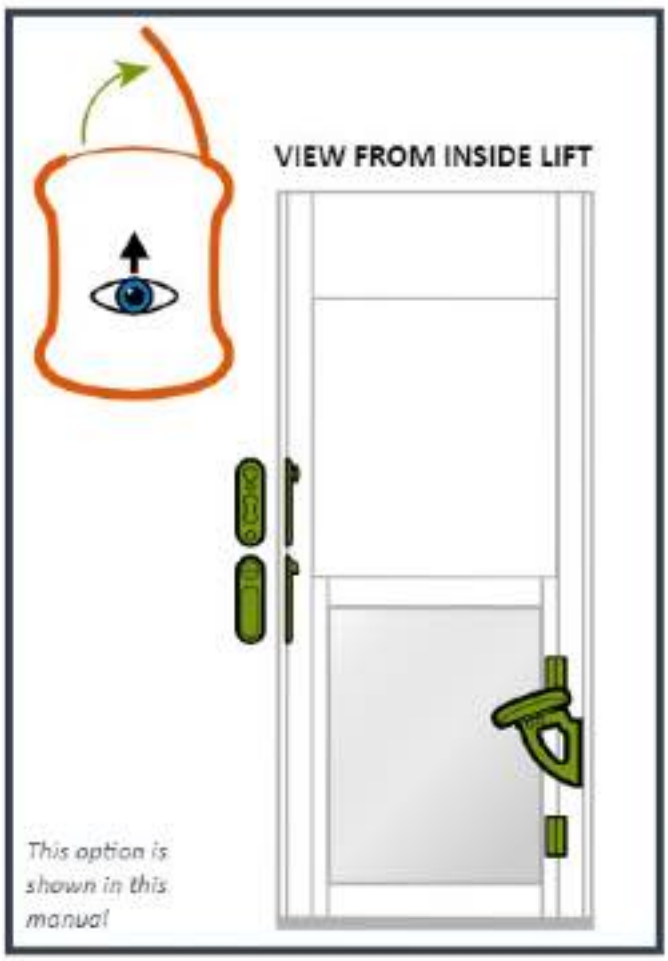
VIEW FROM INSIDE LIFT
This option is shown in this manual

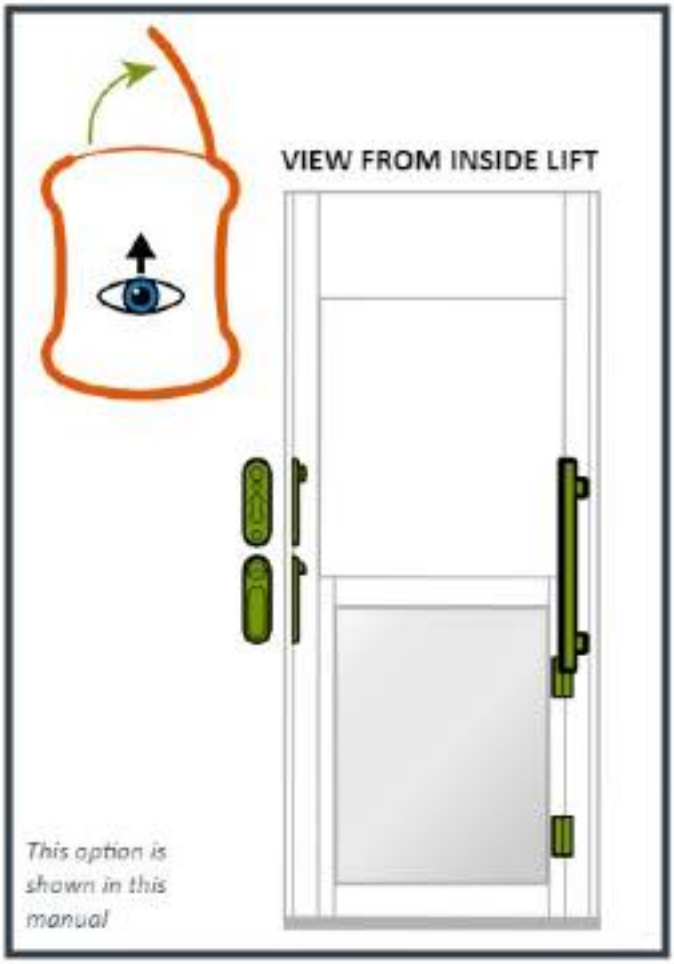
VIEW FROM INSIDE LIFT
This option is shown in this manual

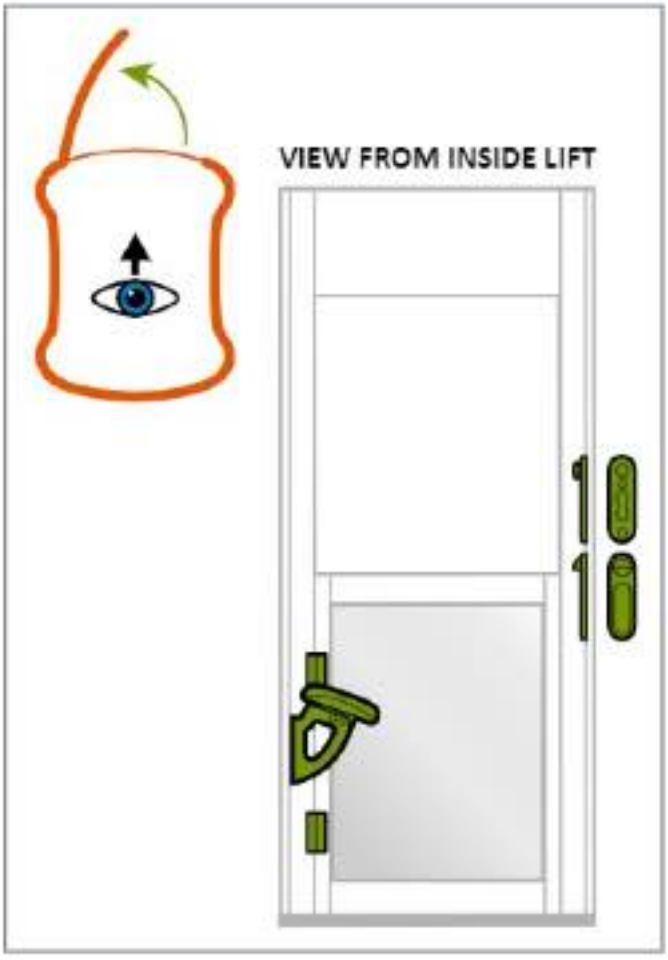
VIEW FROM INSIDE LIFT

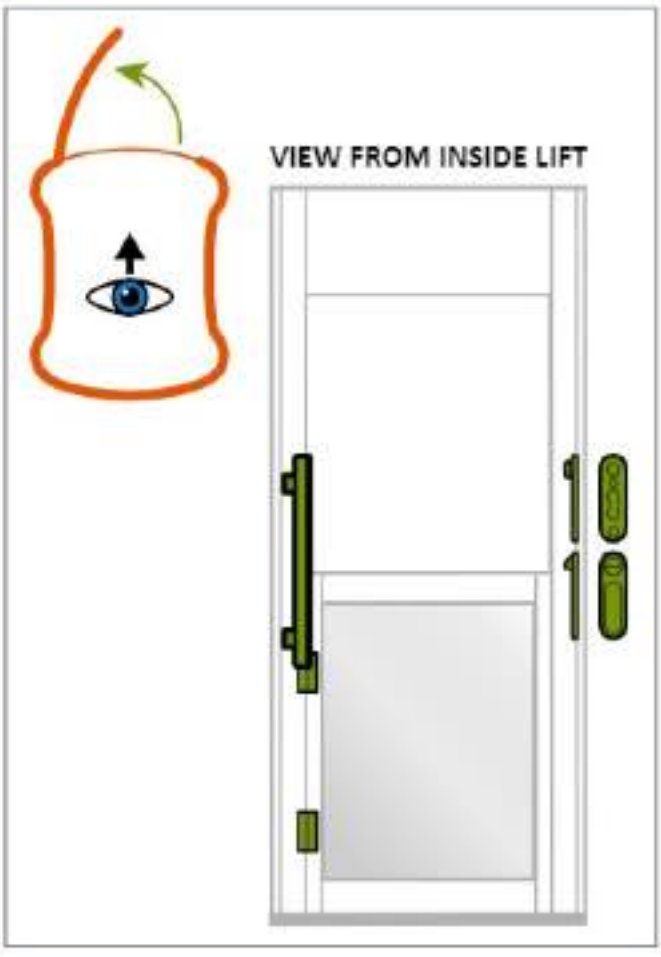
VIEW FROM INSIDE LIFT

Section 5: Car Preparation

FIT PERCH SEAT IF REQUESTED

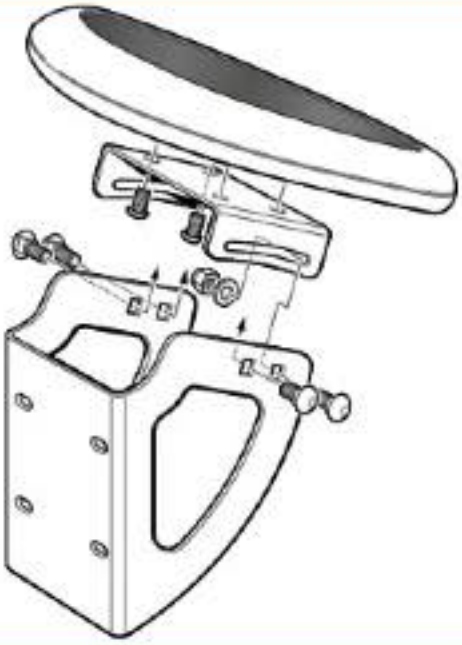







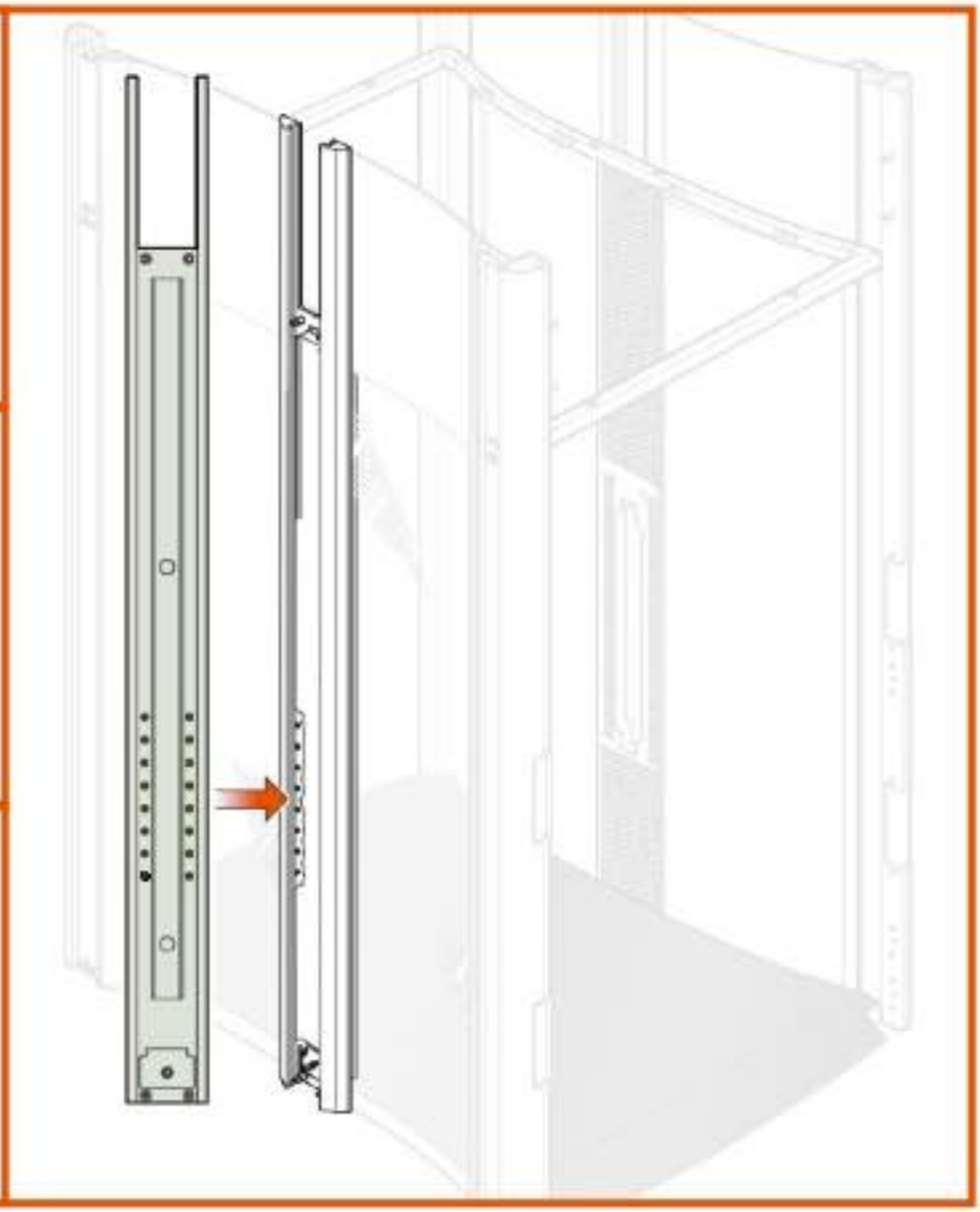

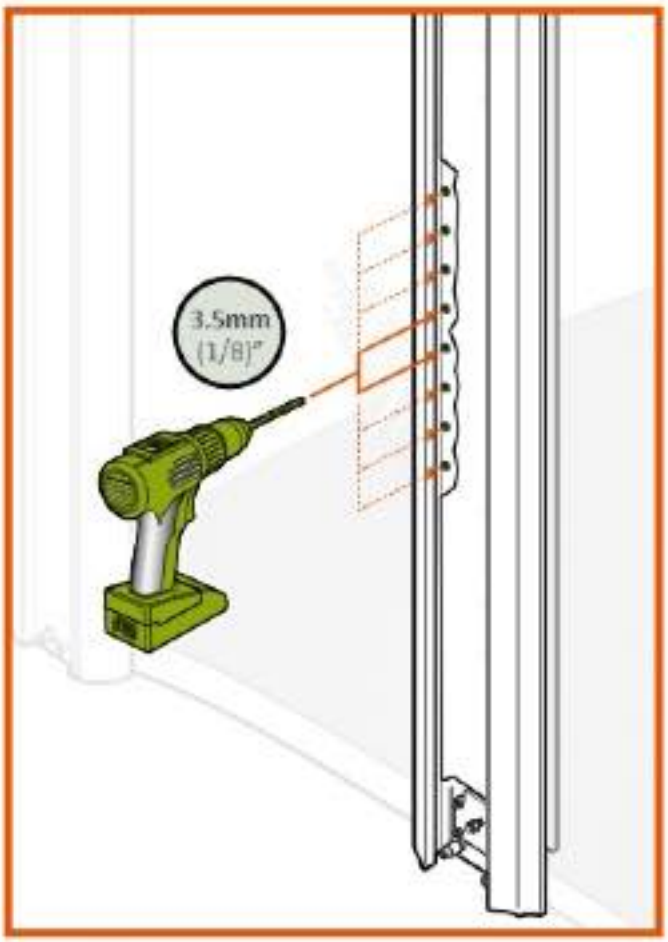

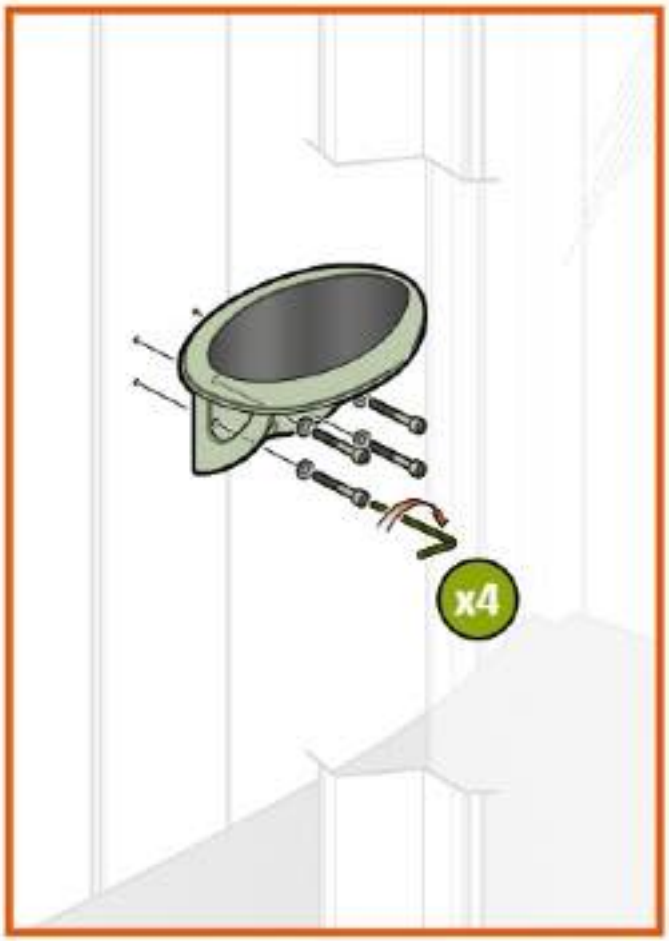

FIT HANDRAIL IF REQUESTED

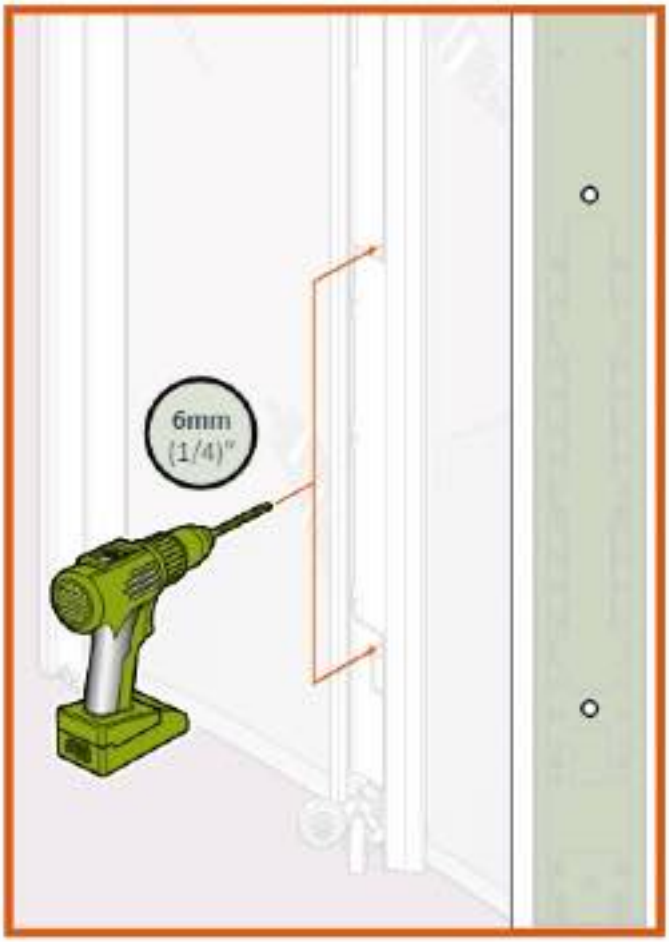

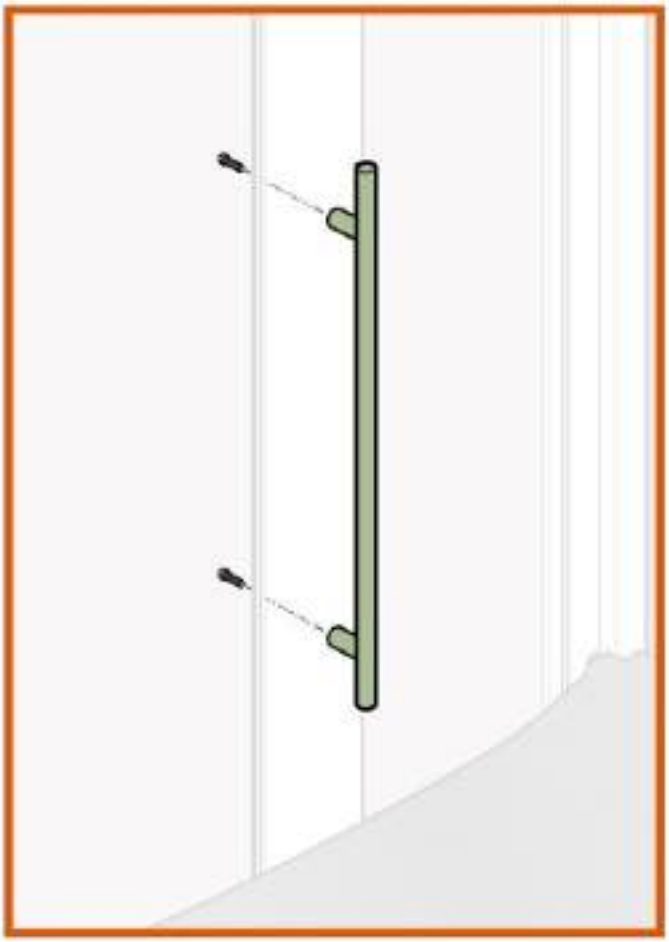

Installation Guidelines

Stiltz™ Homelifts

SECTION 6
Electrical/ Mechanical Connections

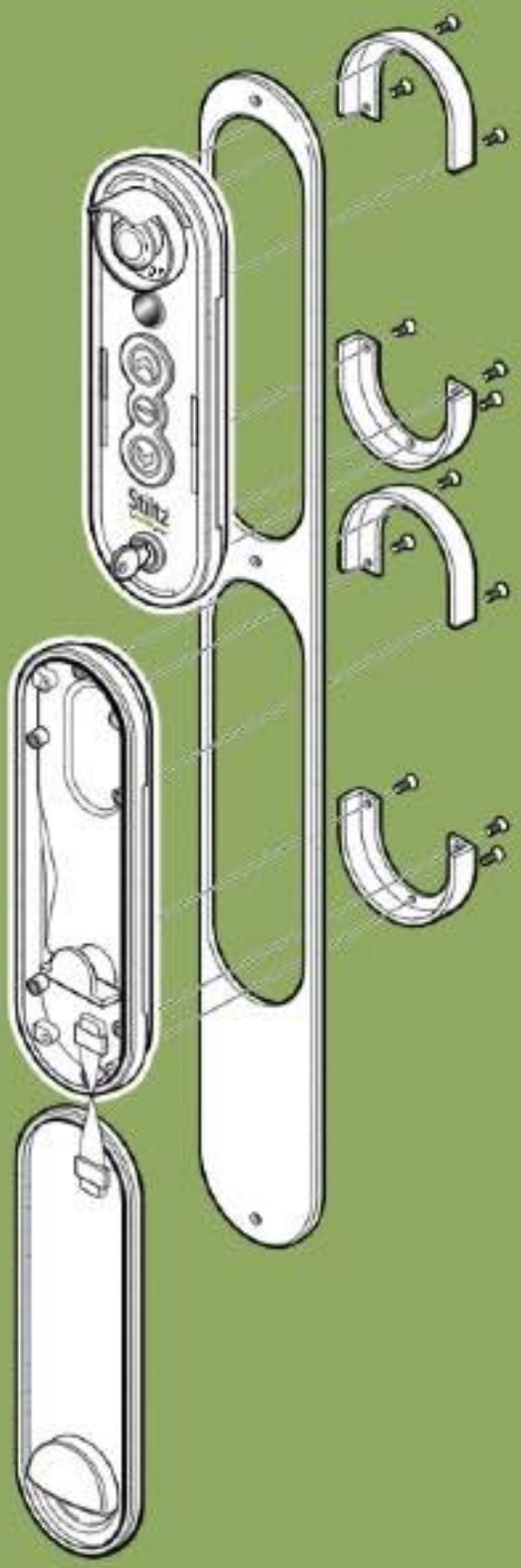

INSTALLATION GUIDELINES

Section 6: Electrical/Mechanical Connections

Supplied with Installation Kit (sold separately)

50104-00038 Remote Pendant	10602-00035 Safety Pan Bridge Lead	30107-00003 Open End Spanner 36mm	30113-00048 T Type Allen Key 4mm
			

Tools Required

Long Nose Pliers	Power Drill	Allen Keys (Metric)	Cross Screwdriver
			
Flat Screwdriver	**Spanners**	**Pliers**	**Stanley Knife**
			
Scissors	**Electrical Multi Meter**	**Steps**	**PH2 + PH3 Bits**
			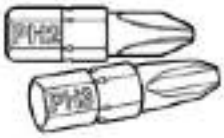

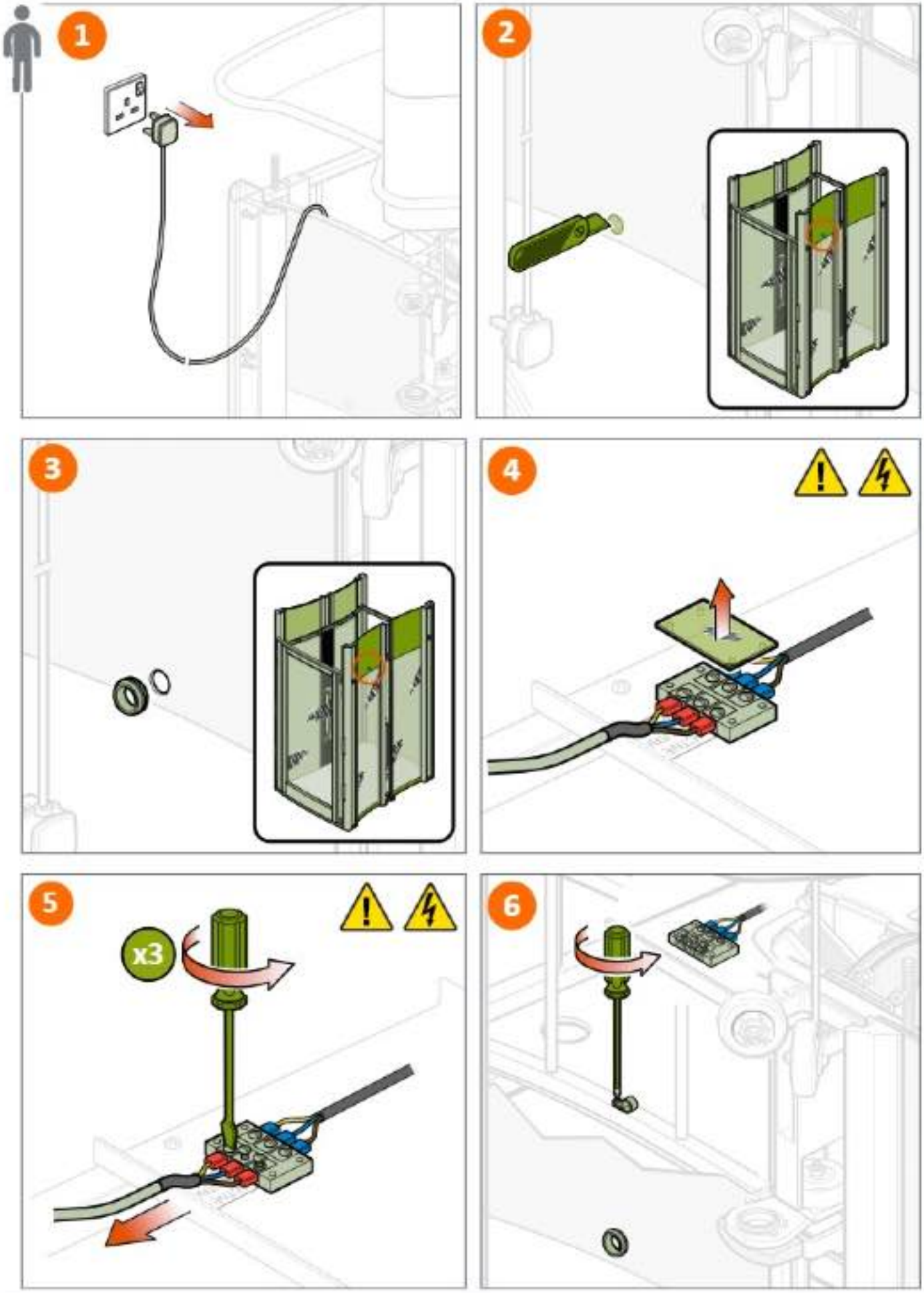
1
2
3
4
5
x3
6

Section 6: Electrical/Mechanical Connections

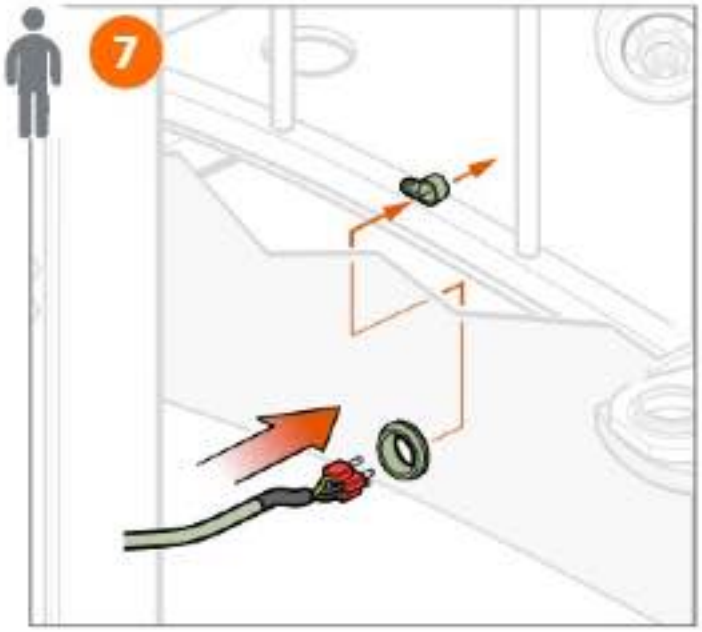

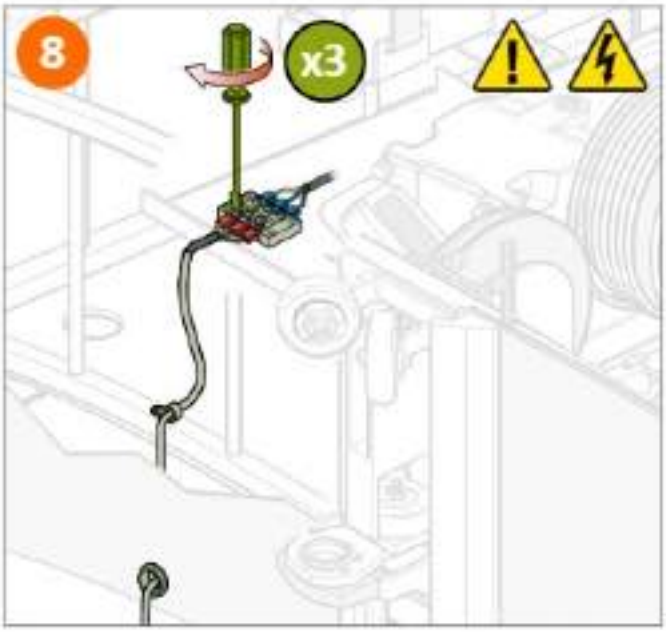

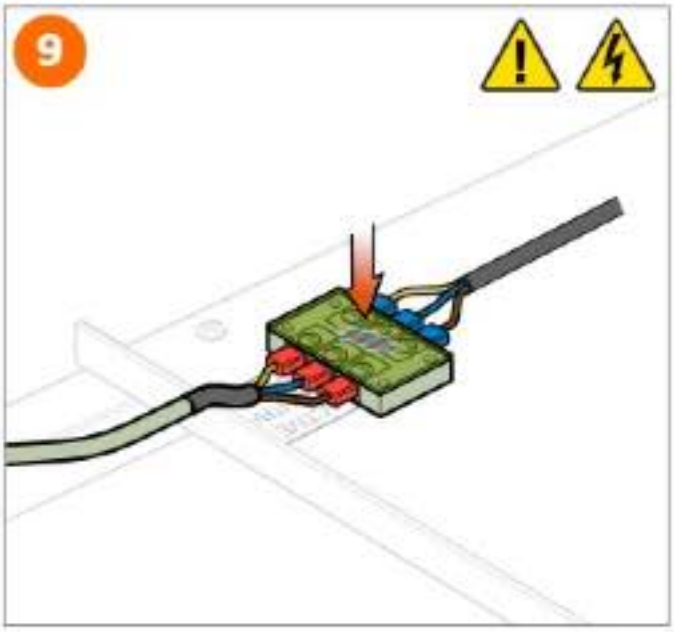

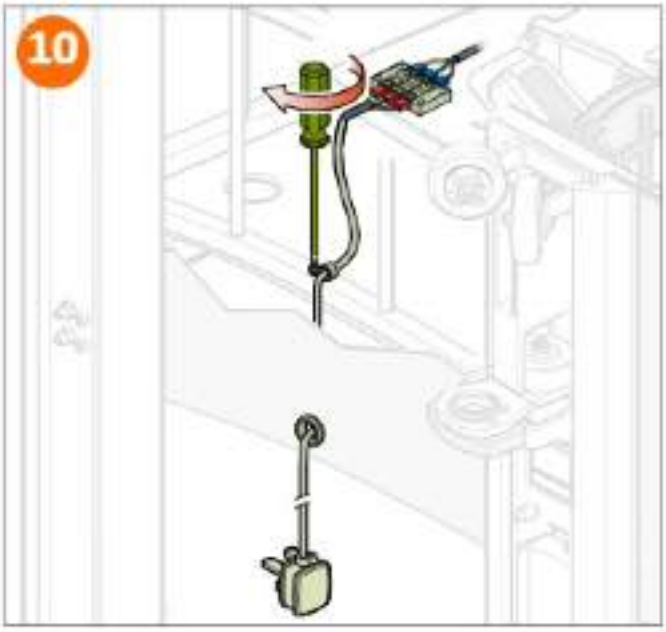

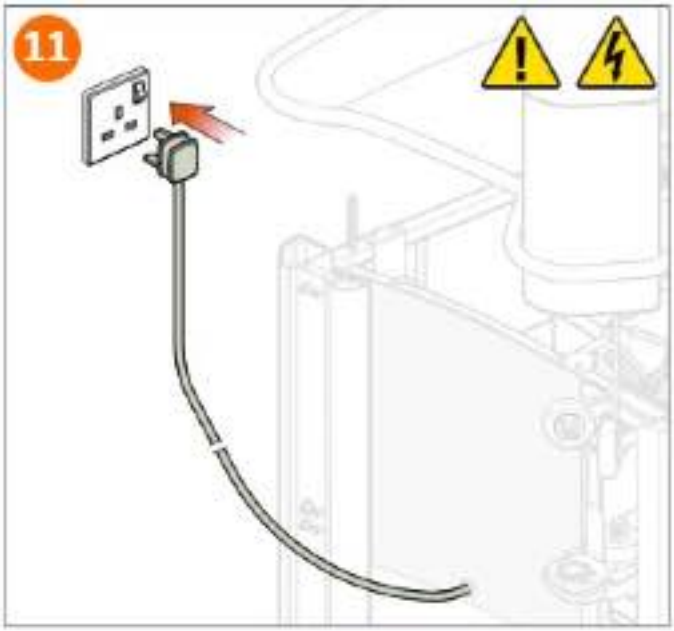

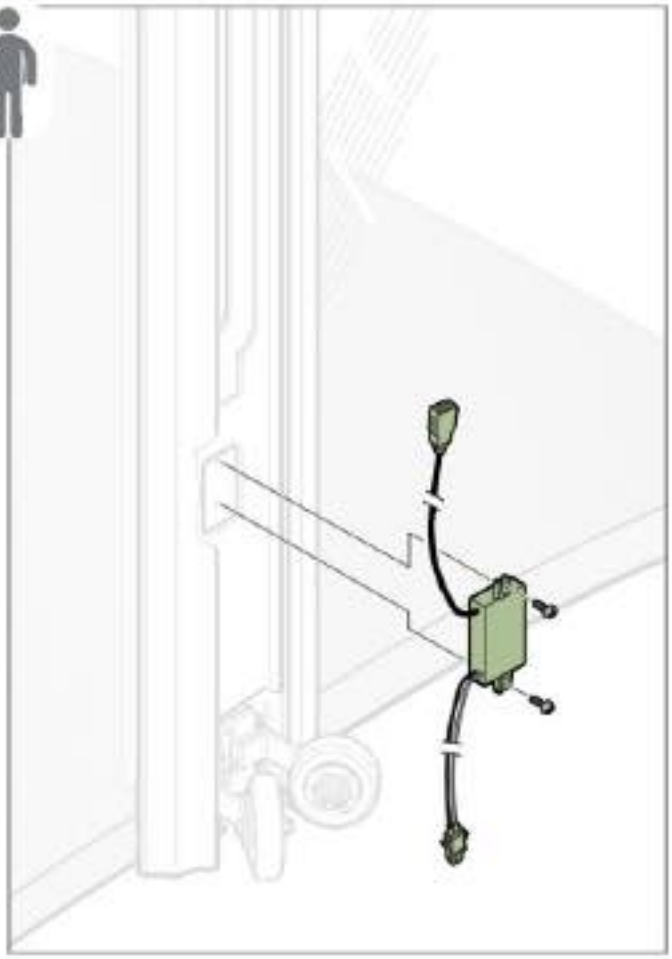

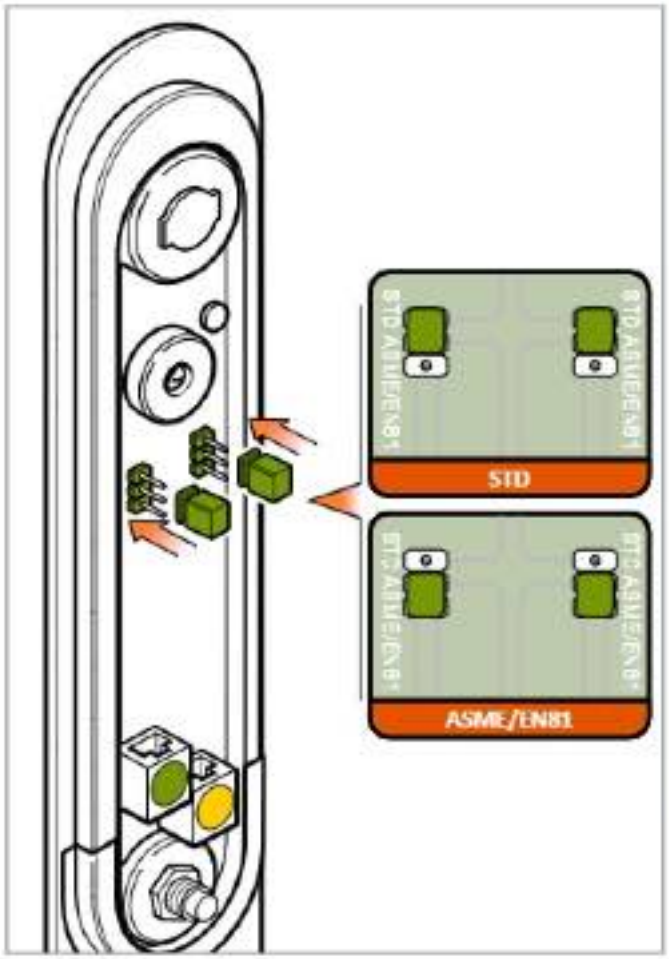
STD
ASME/EN81

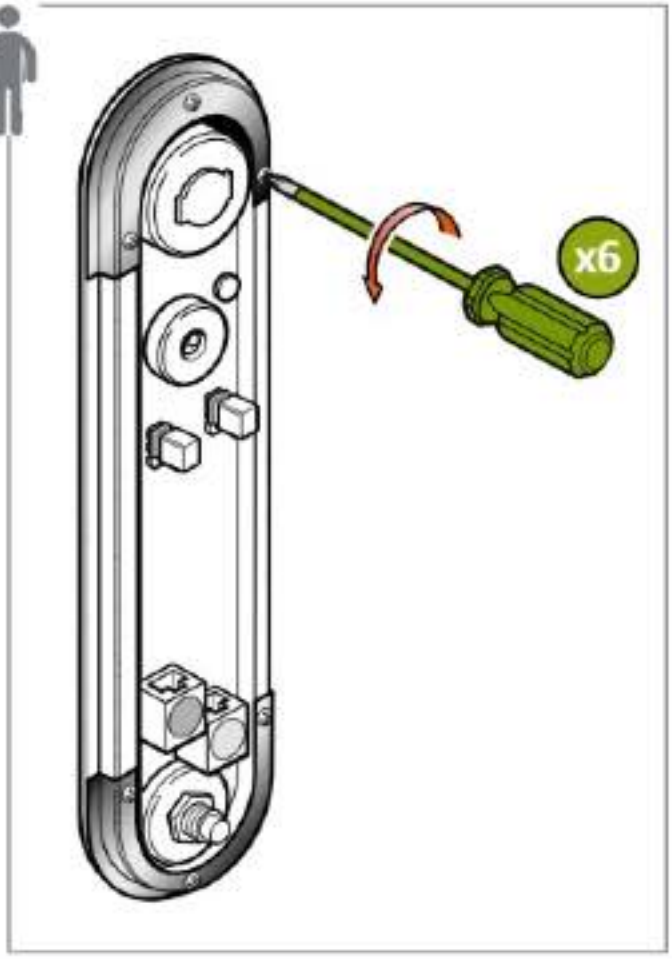
x6

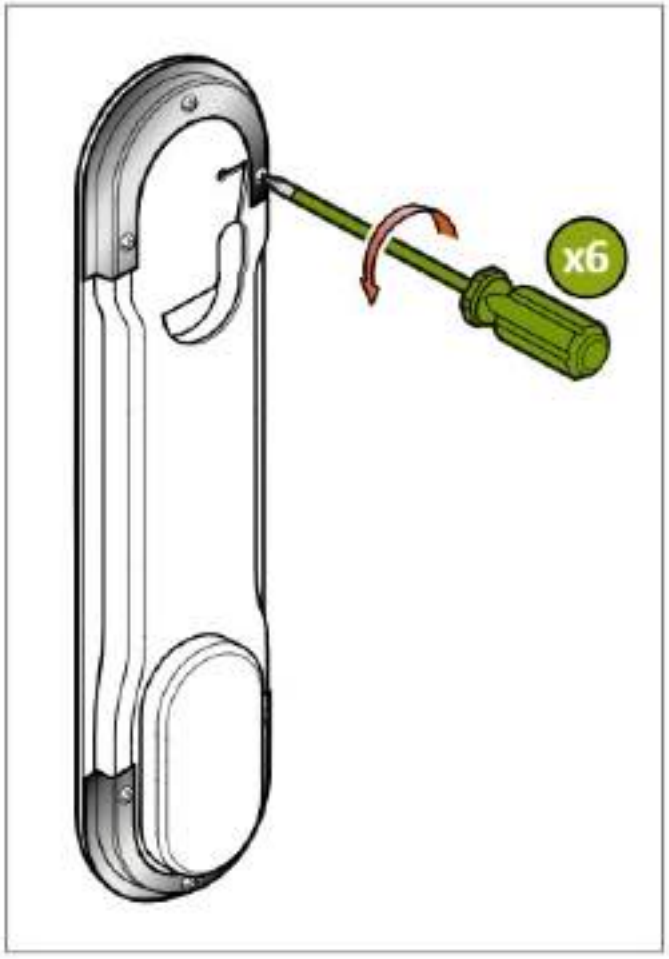
x6

Section 6: Electrical/Mechanical Connections

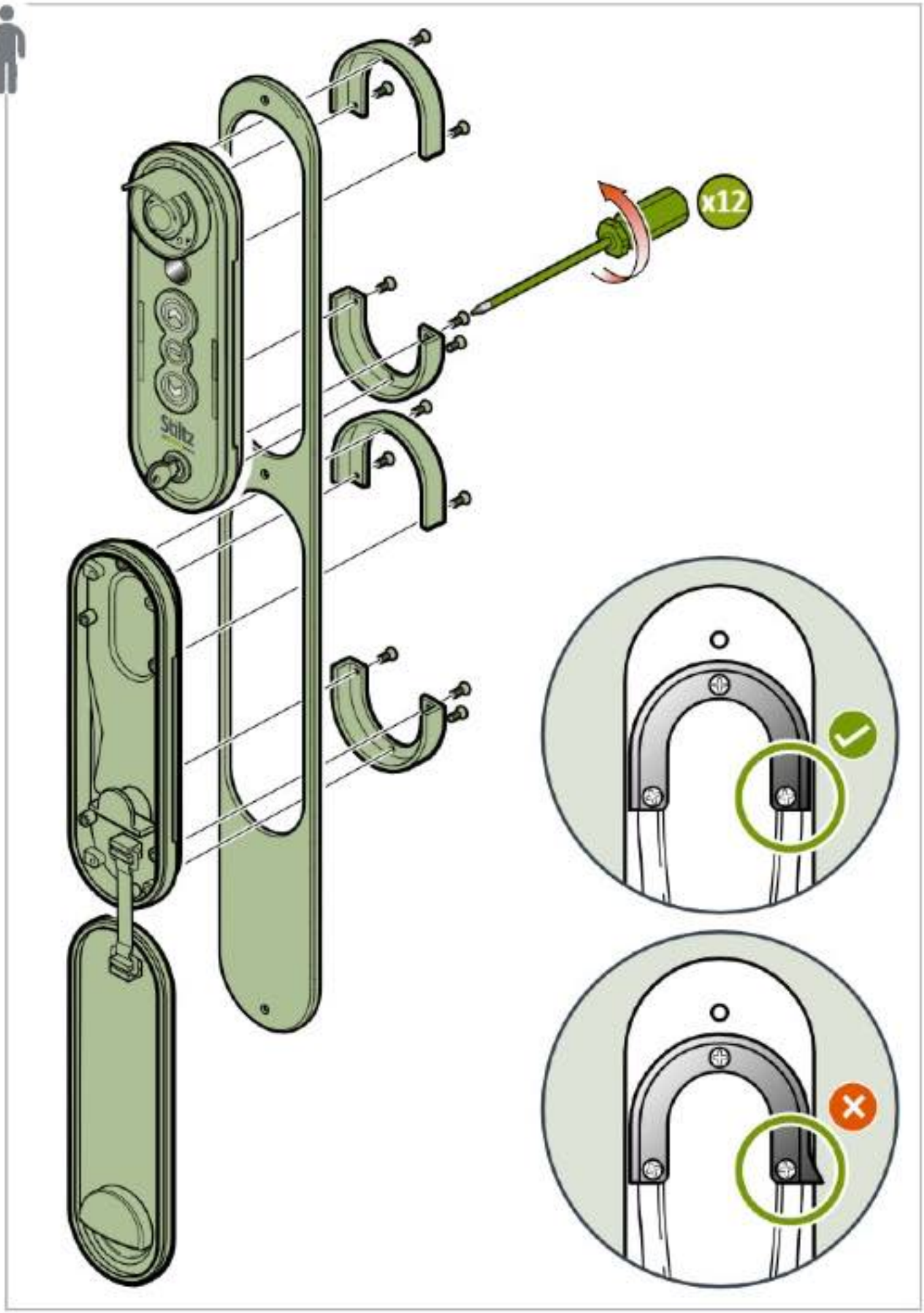

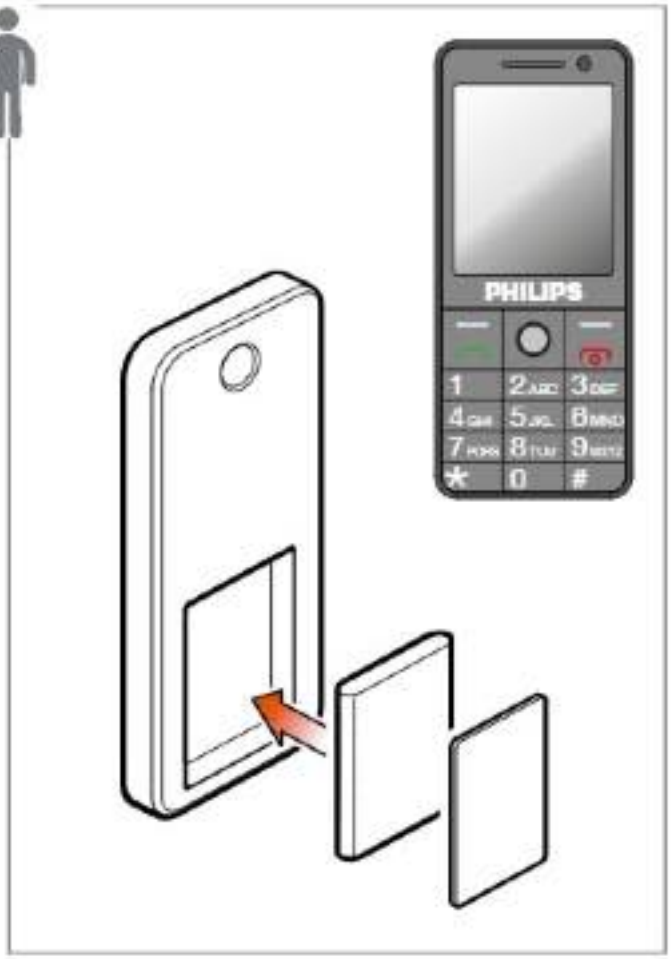
PHILIPS
1
2 ABC
3 DEF
4 GHI
5 JKL
6 MNO
7 PQRS
8 TUV
9 WXYZ
*
0
#

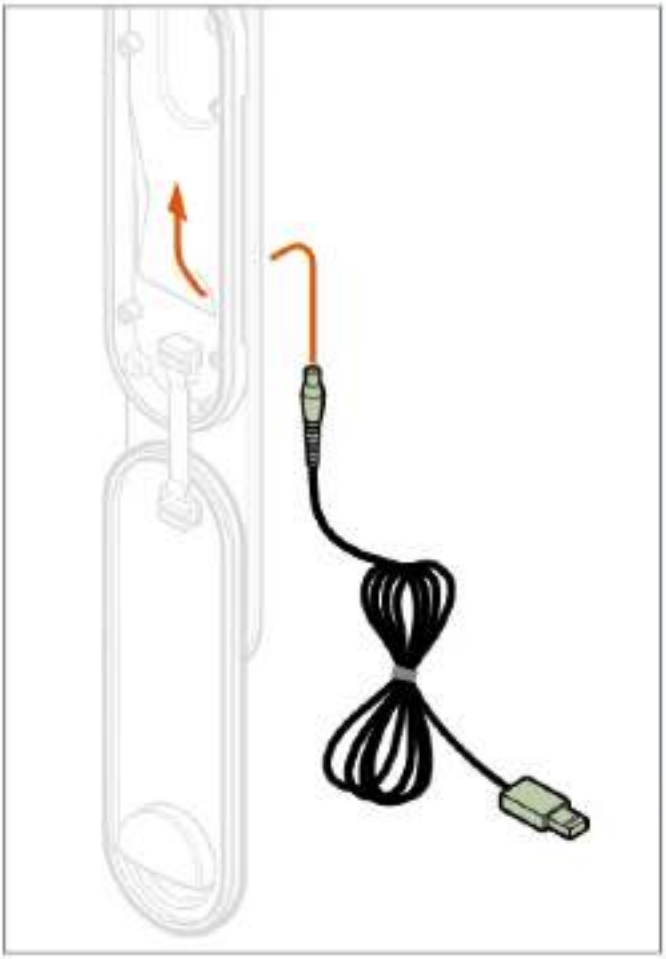

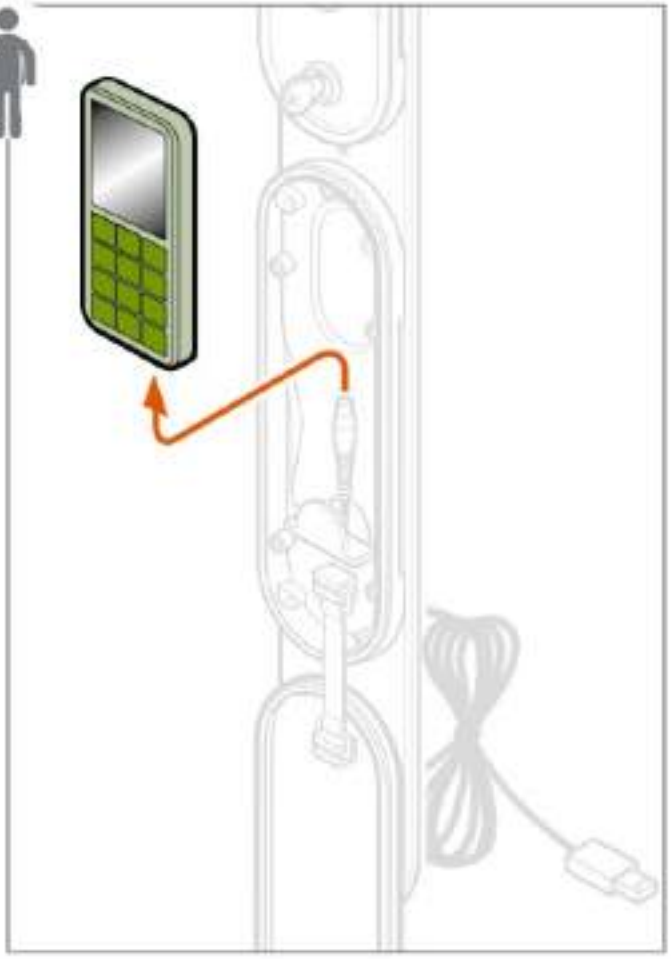

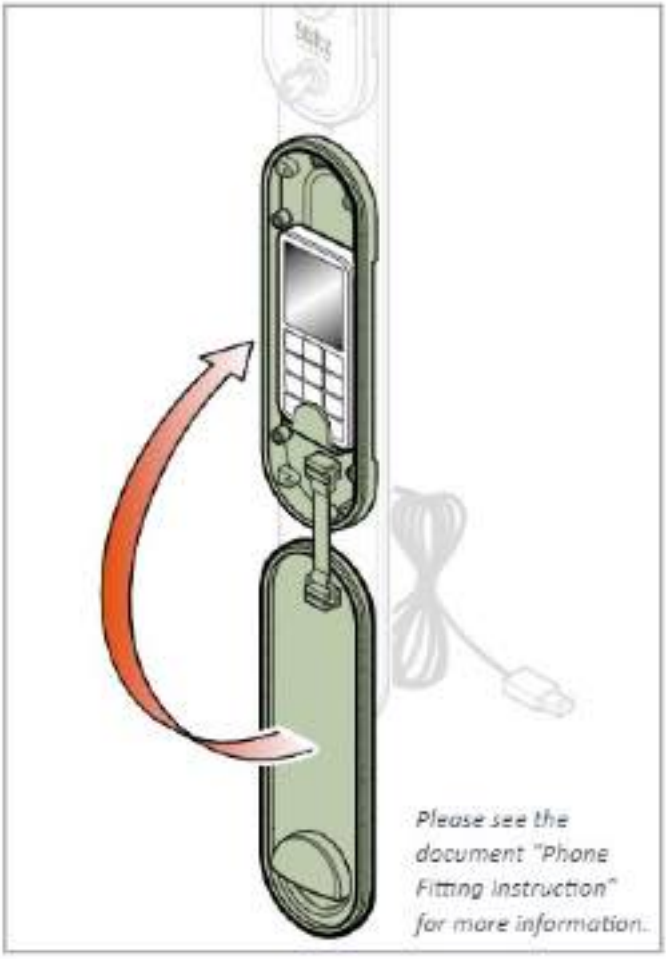
Please see the document "Phone Fitting Instruction" for more information.

Section 6: Electrical/Mechanical Connections

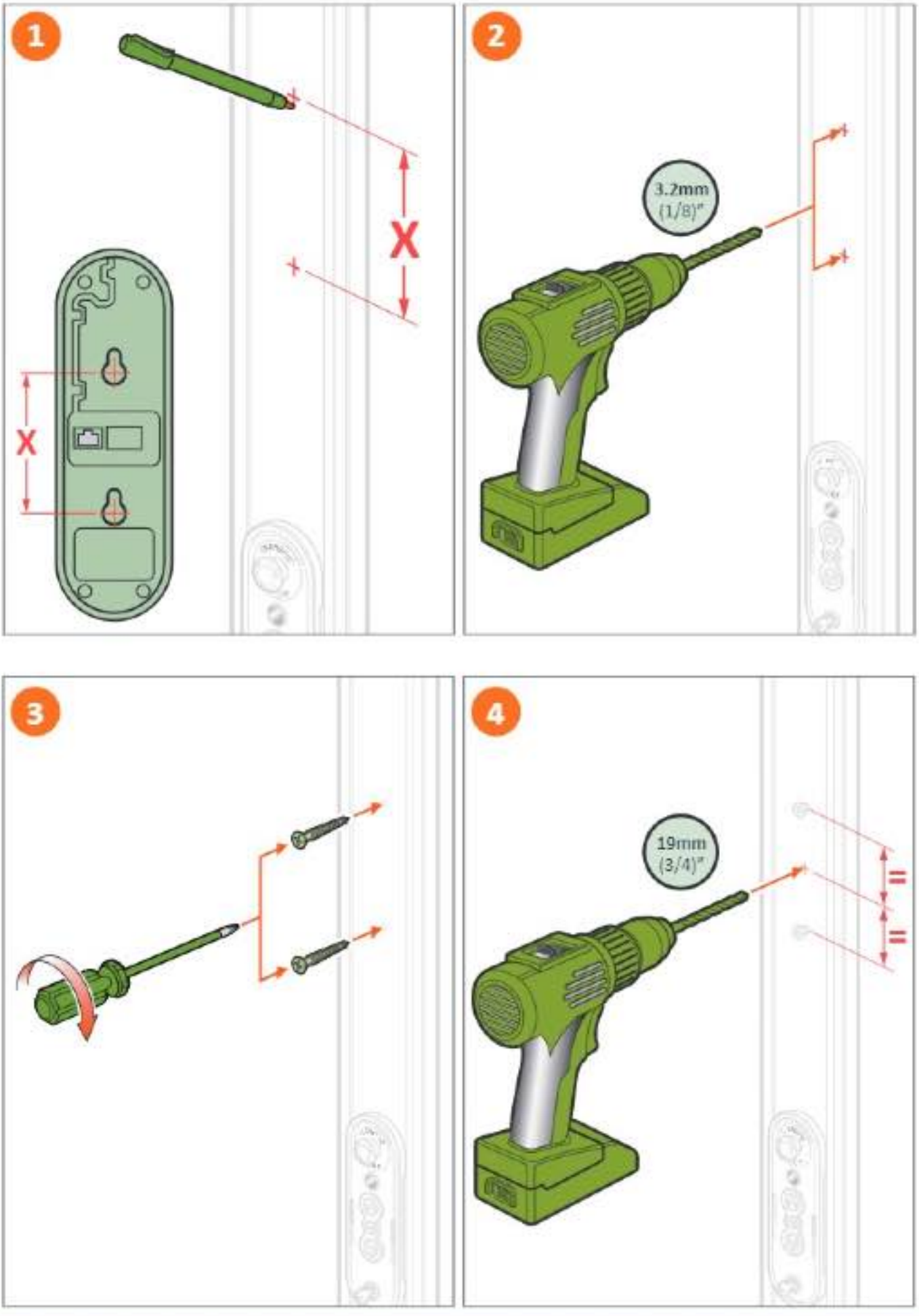

Section 6: Electrical/Mechanical Connections

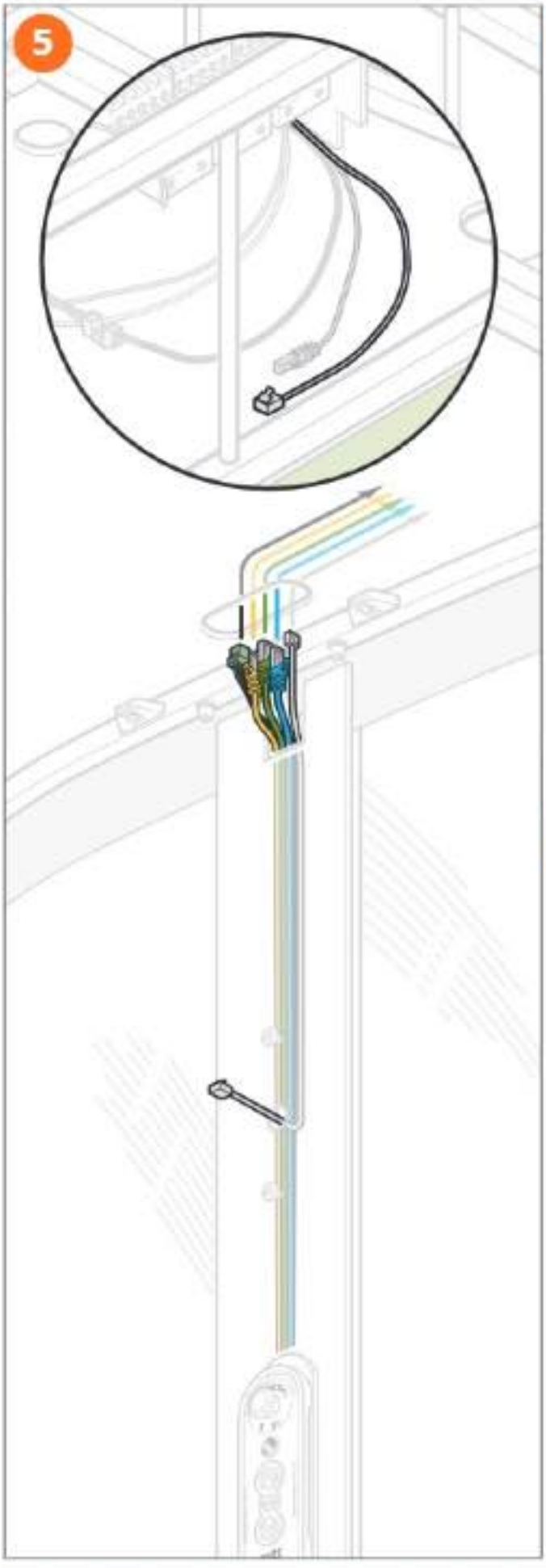

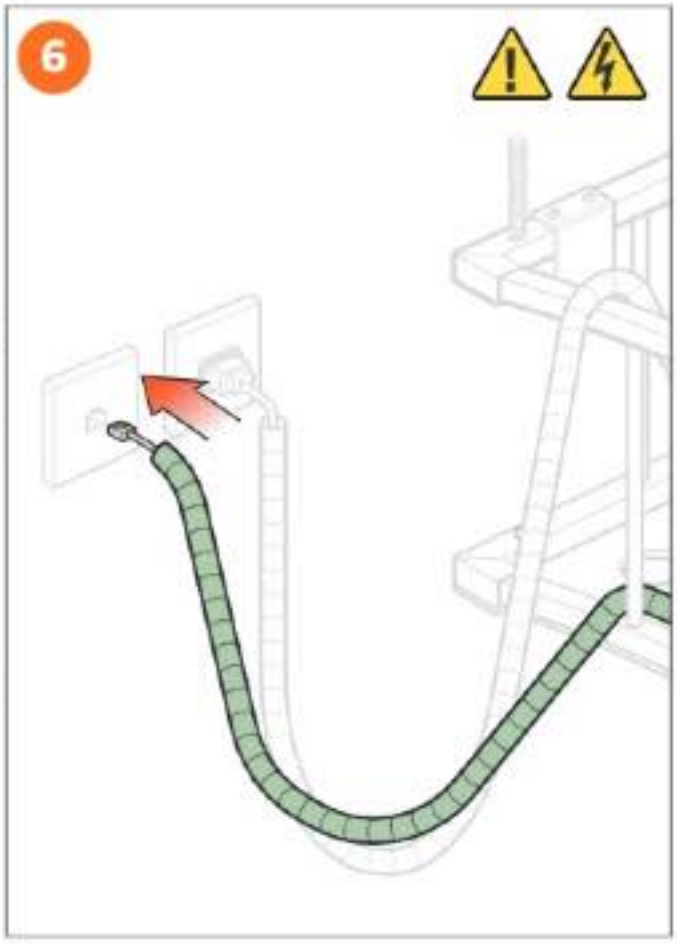

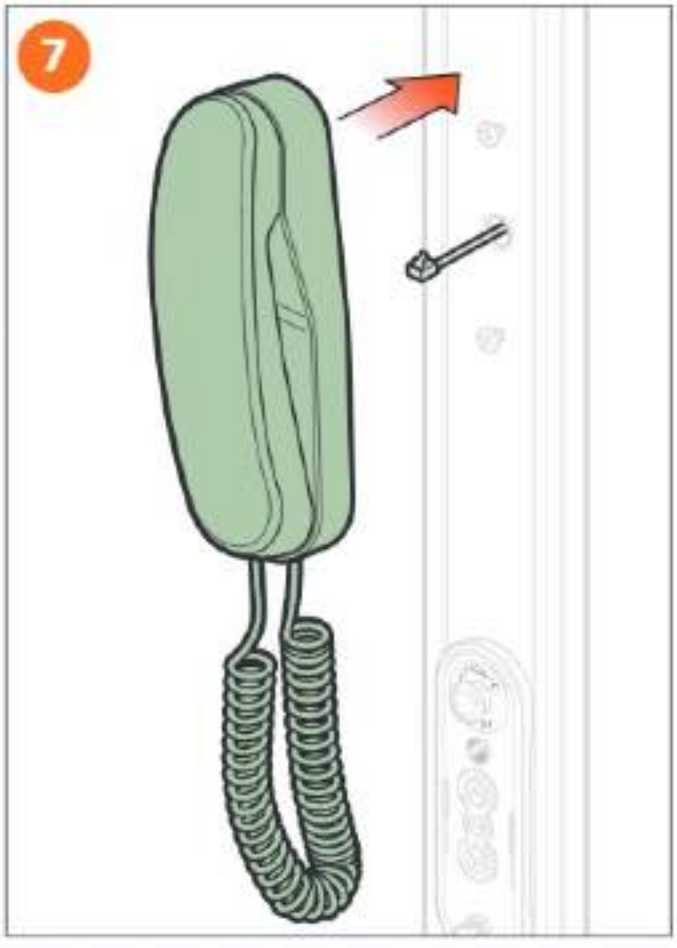

Section 6: Electrical/Mechanical Connections

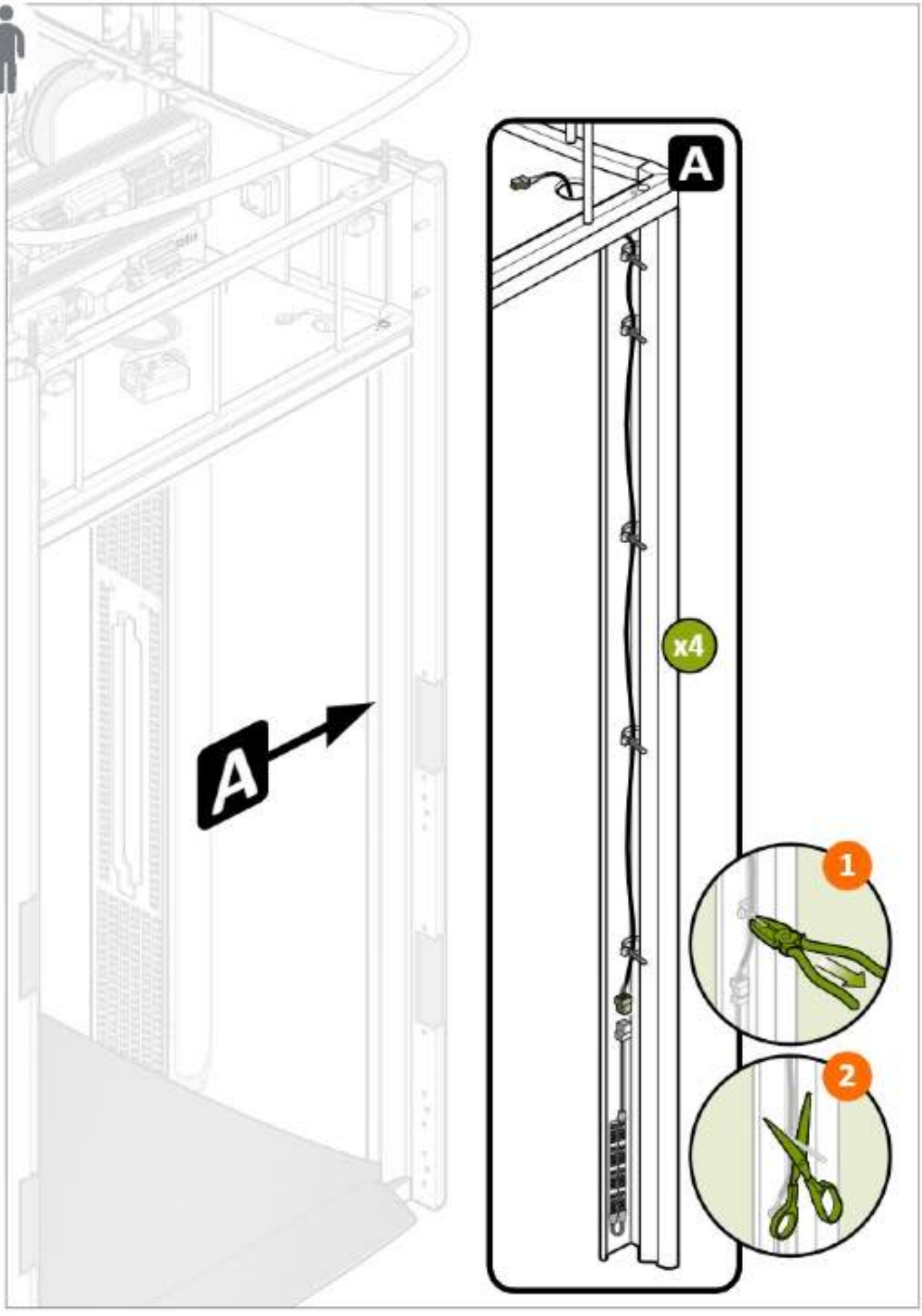

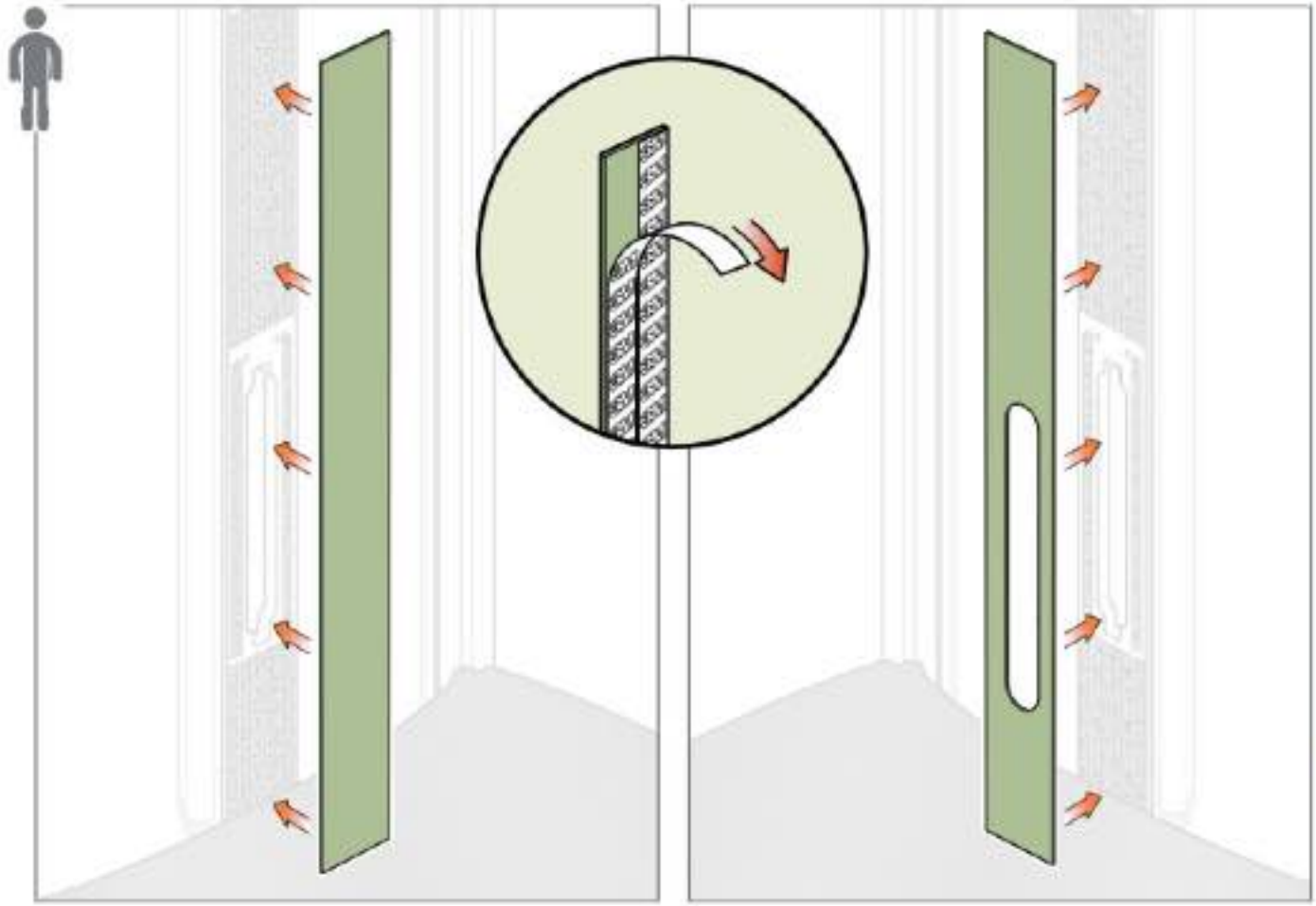

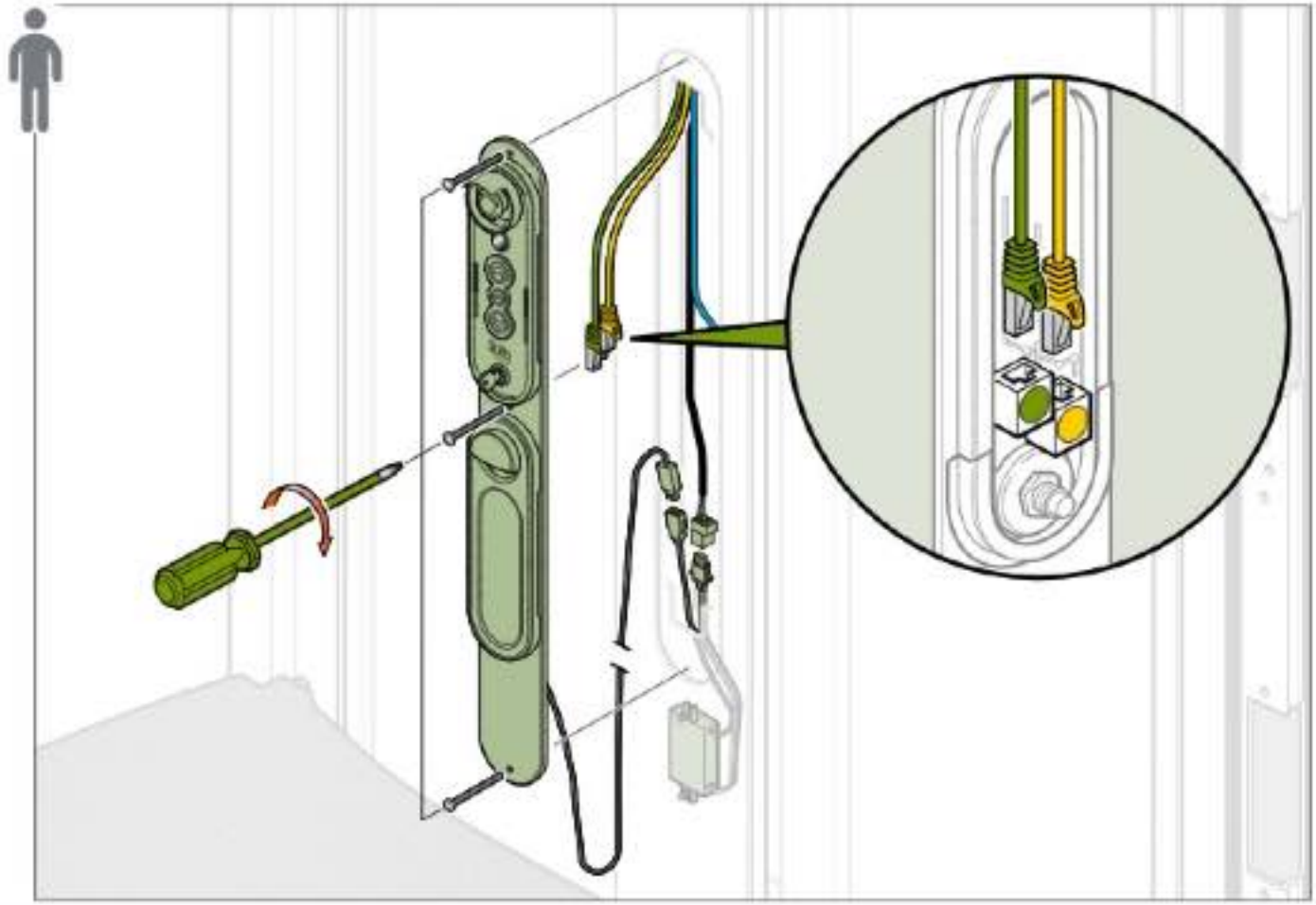

Section 6: Electrical/Mechanical Connections

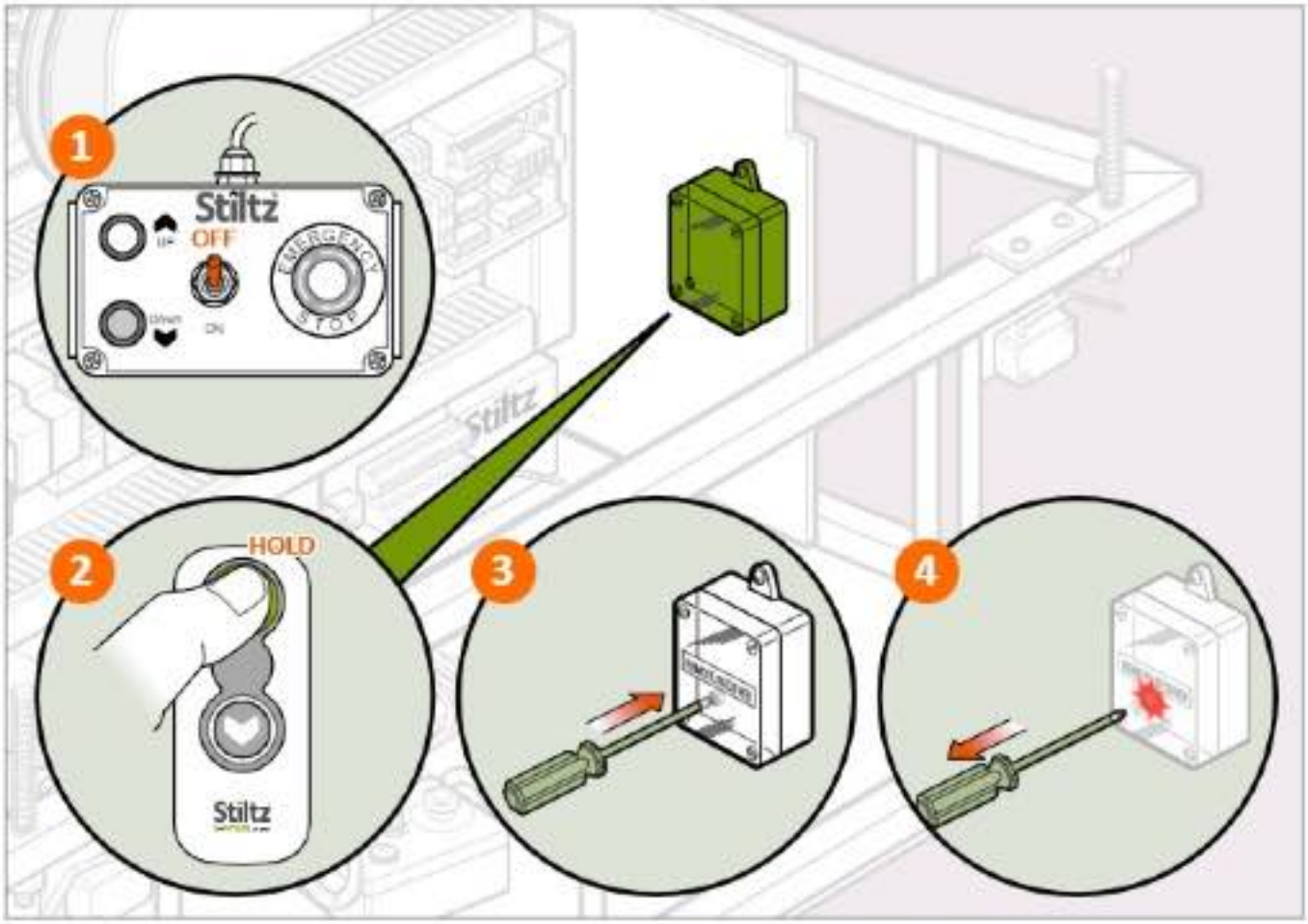

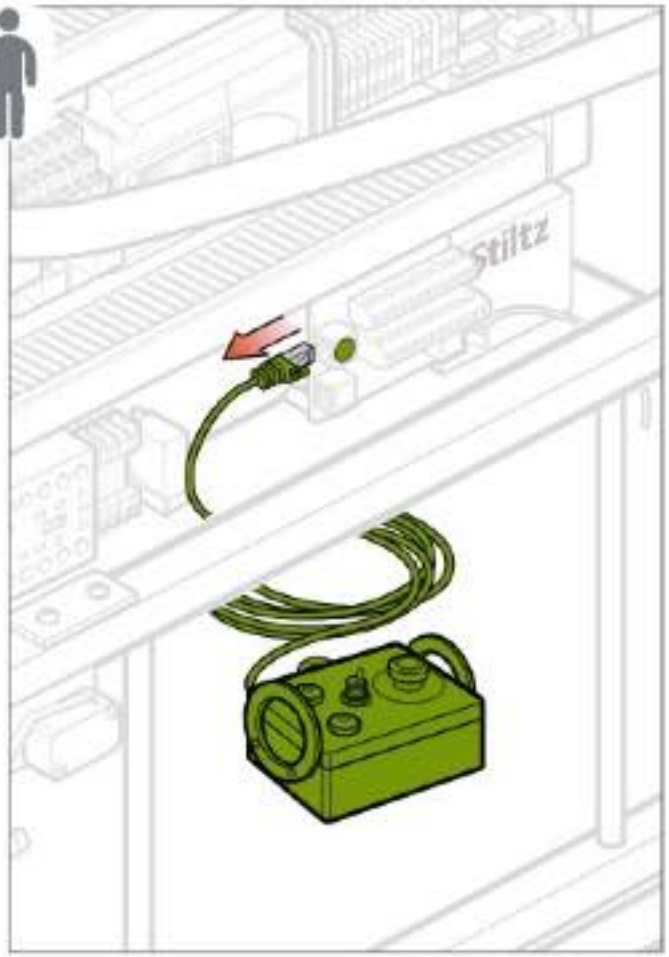

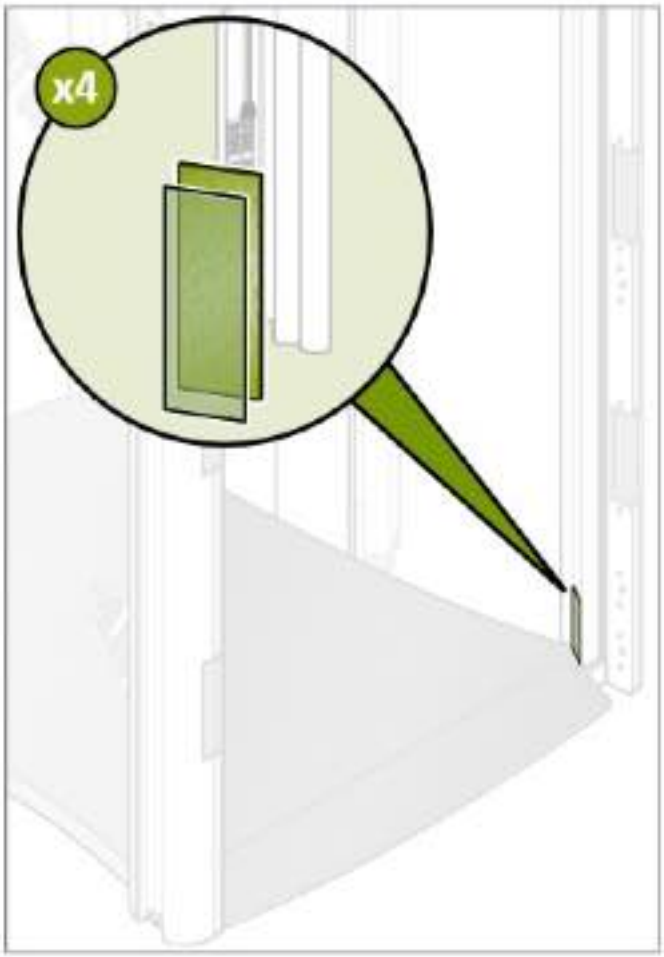

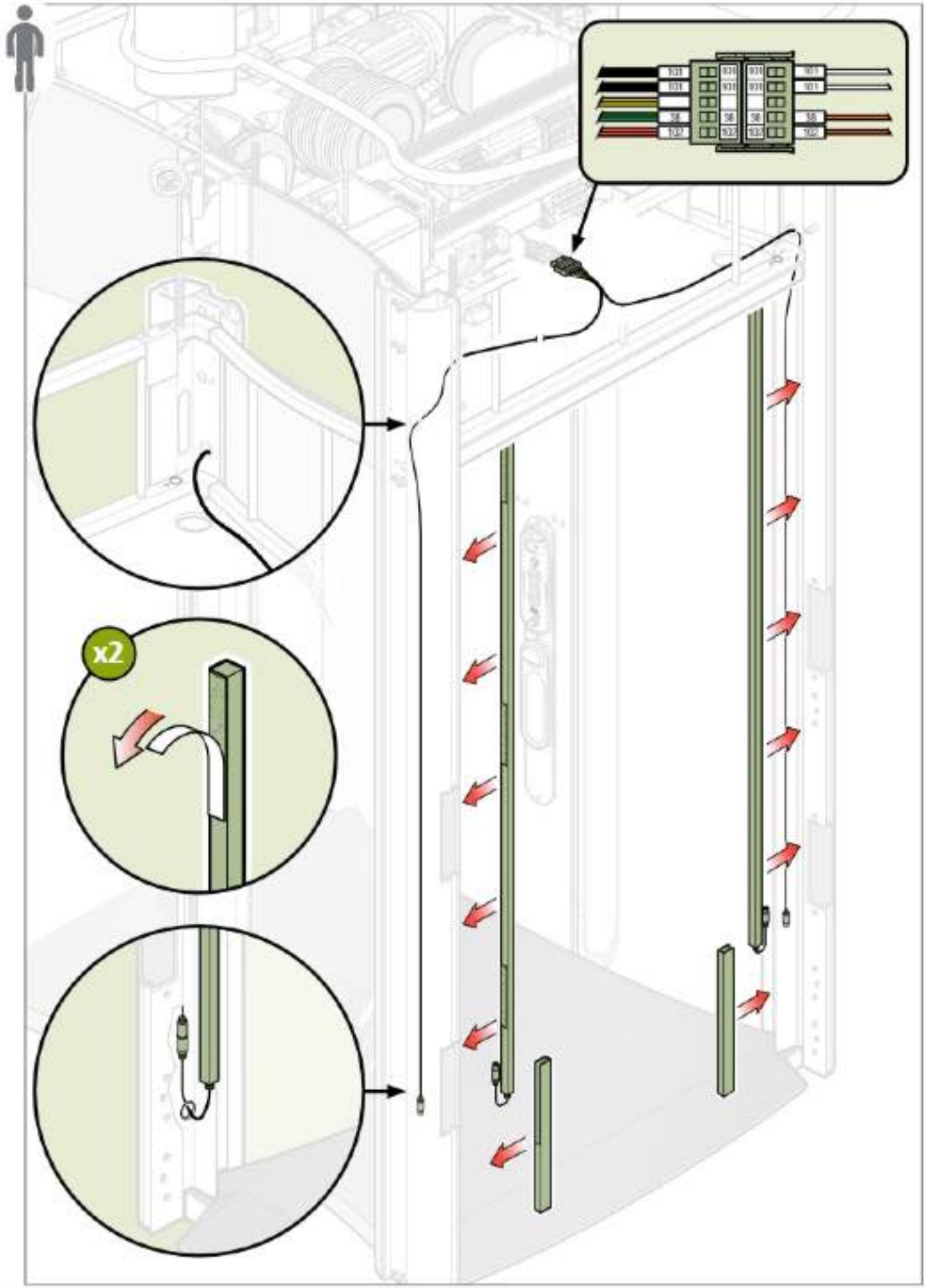
x2

Section 6: Electrical/Mechanical Connections

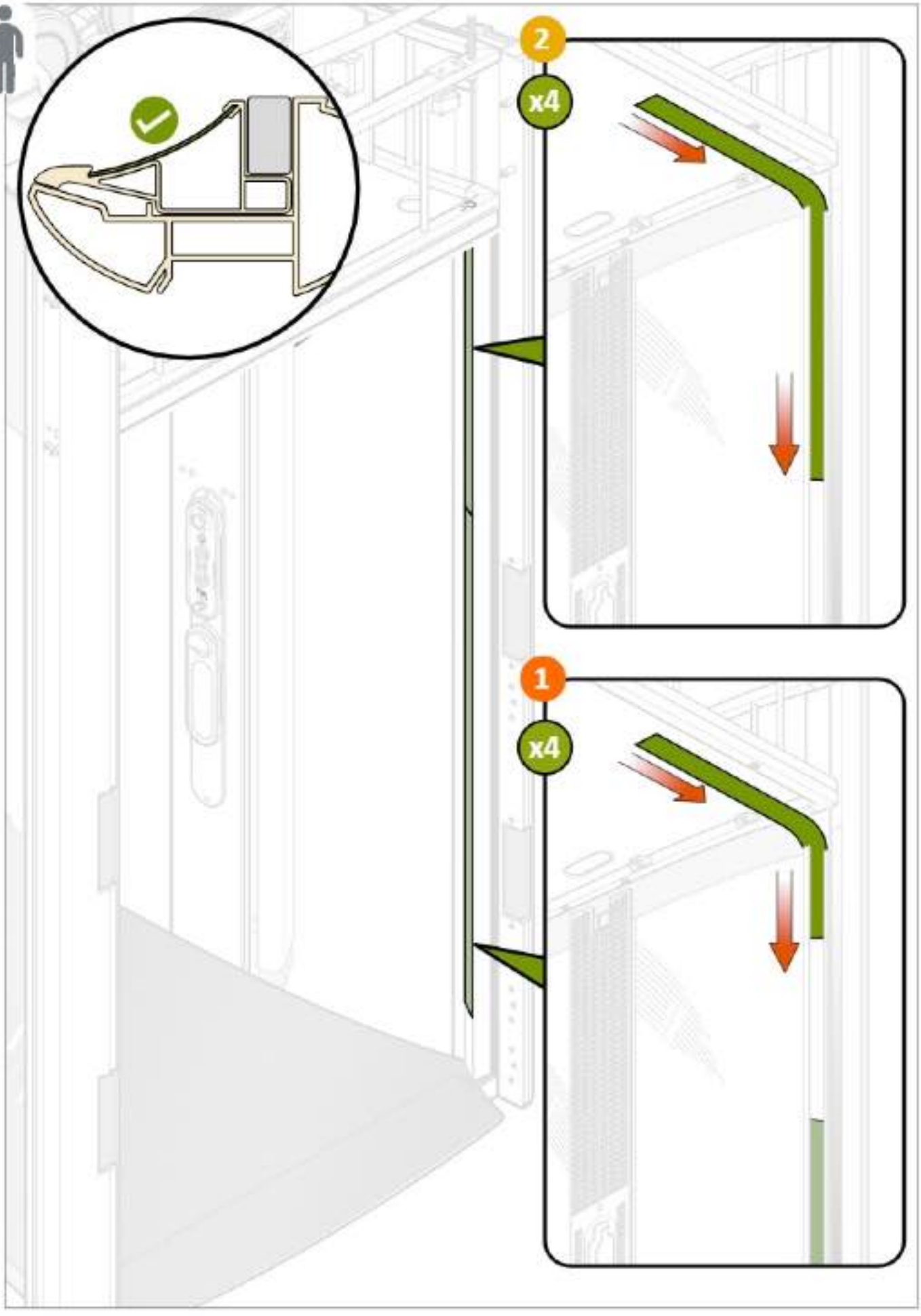

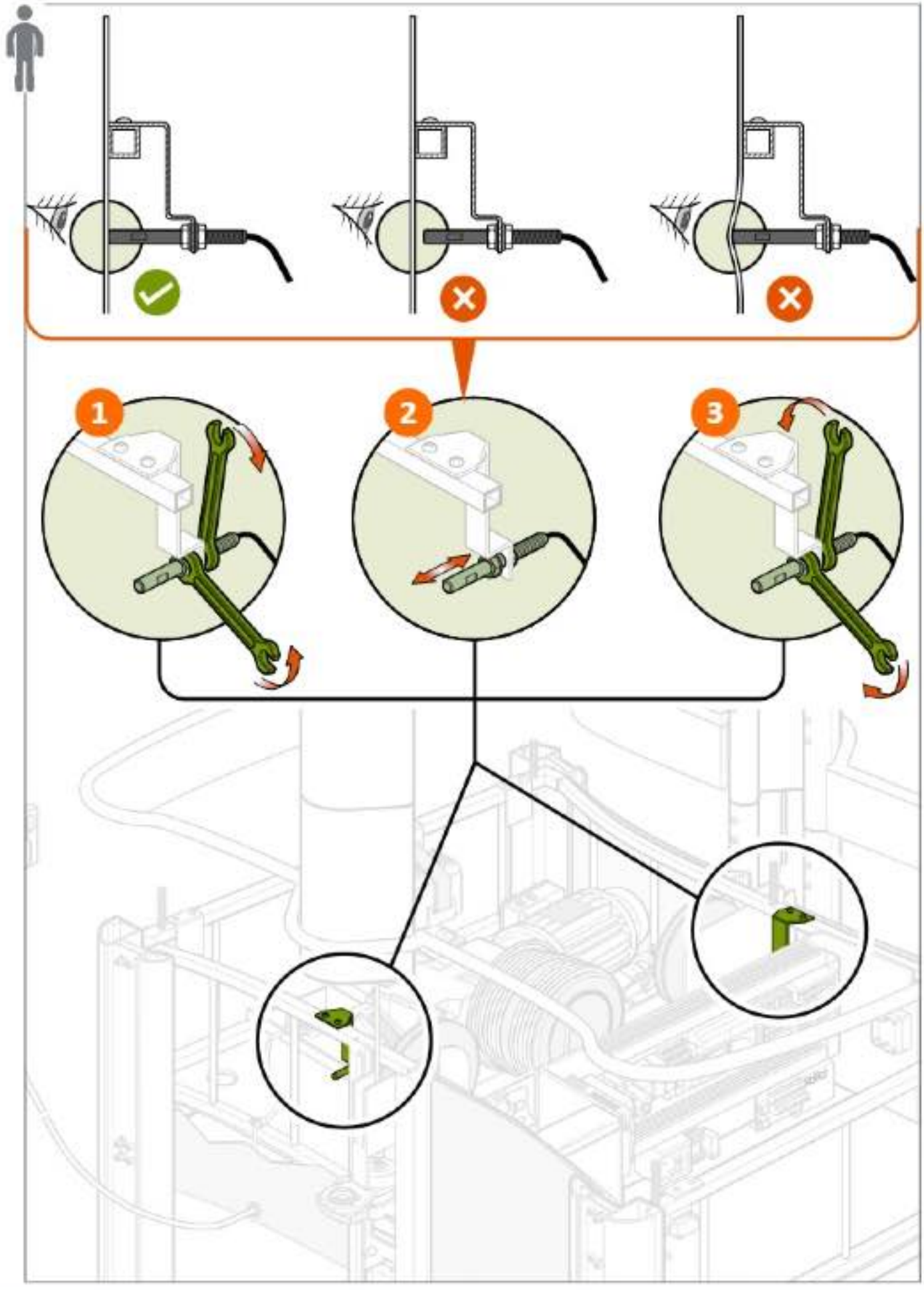
1
2
3

Section 6: Electrical/Mechanical Connections

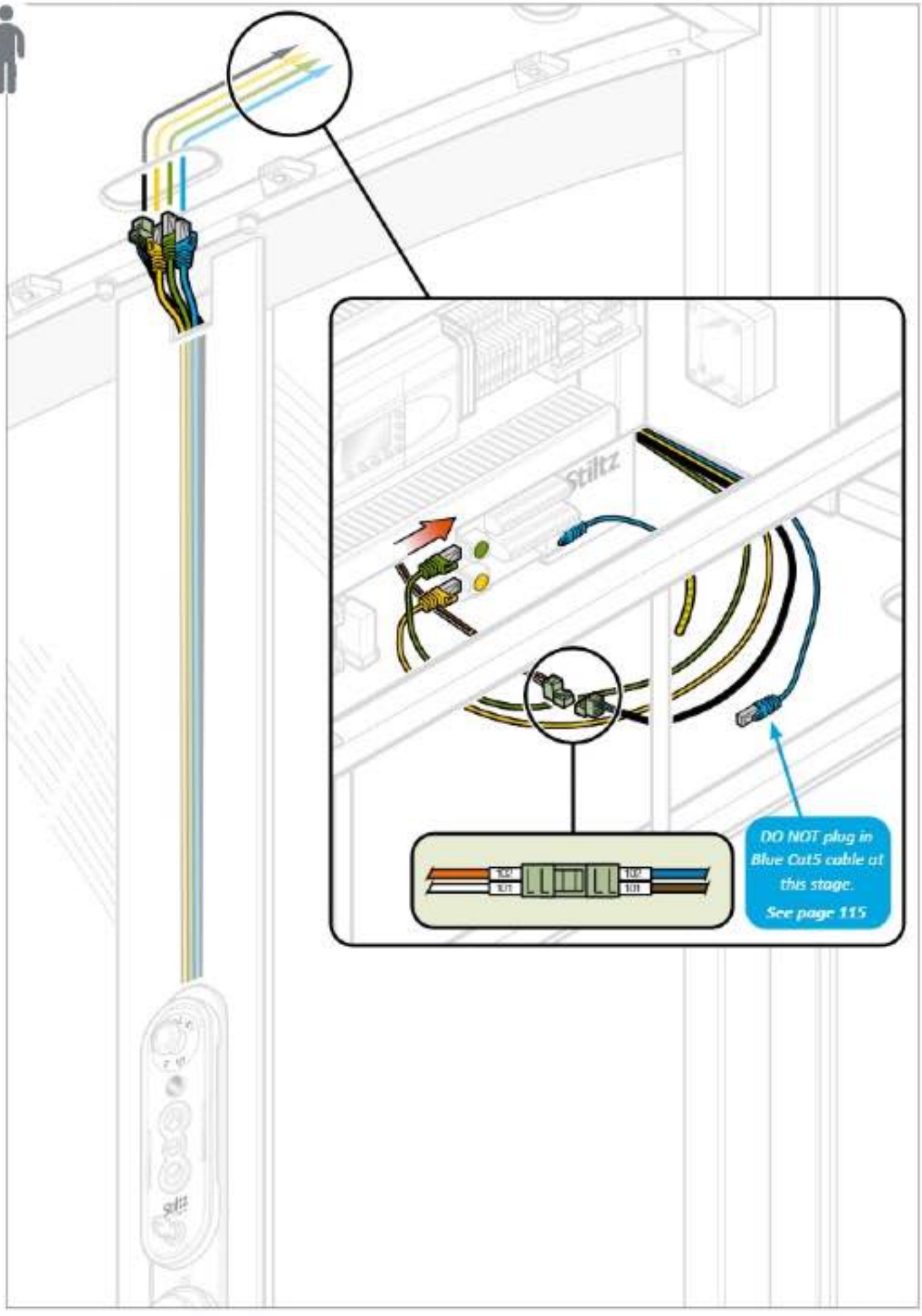

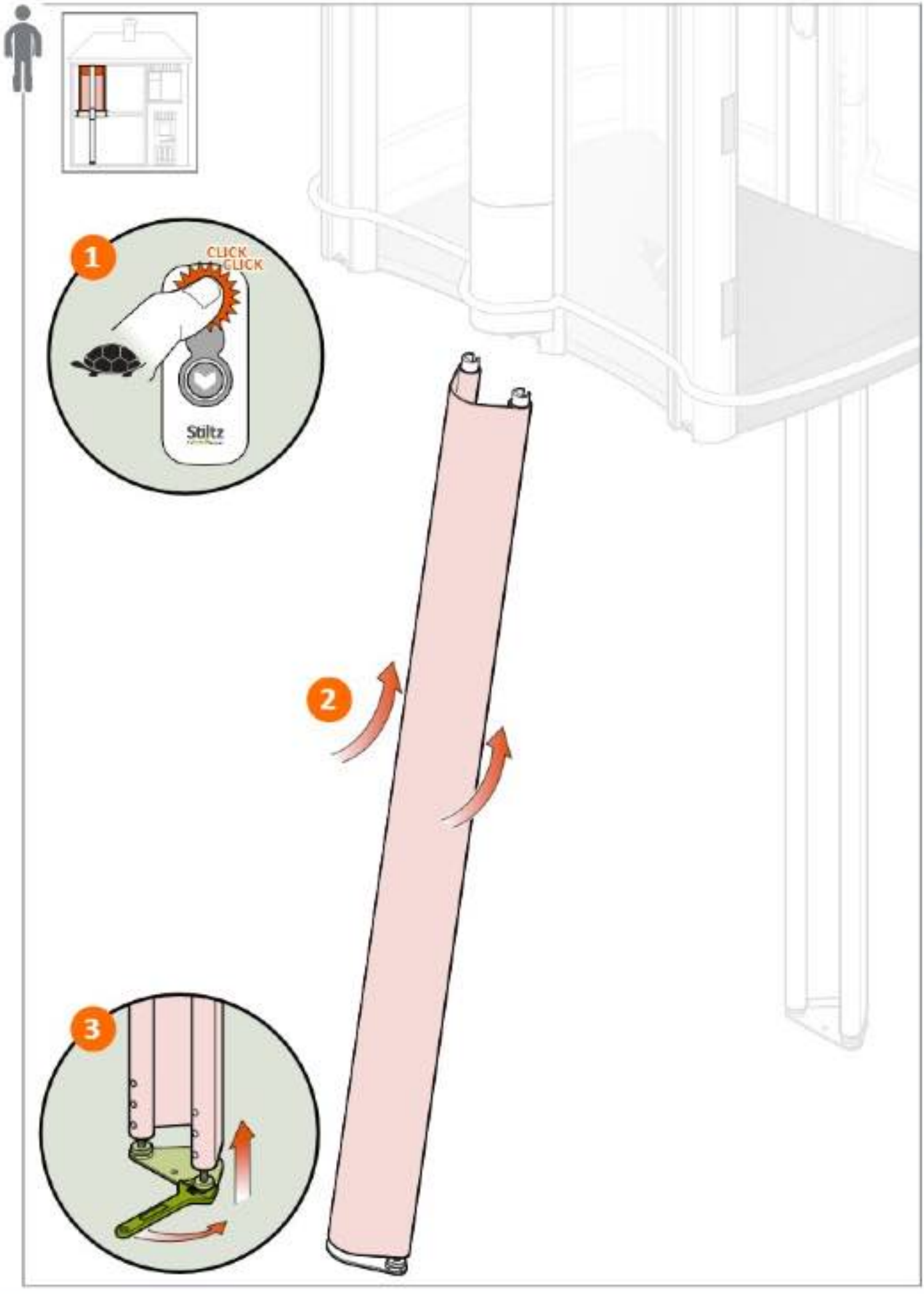
1
CLICK
CLICK
Stiltz
2
3

Section 6: Electrical/Mechanical Connections

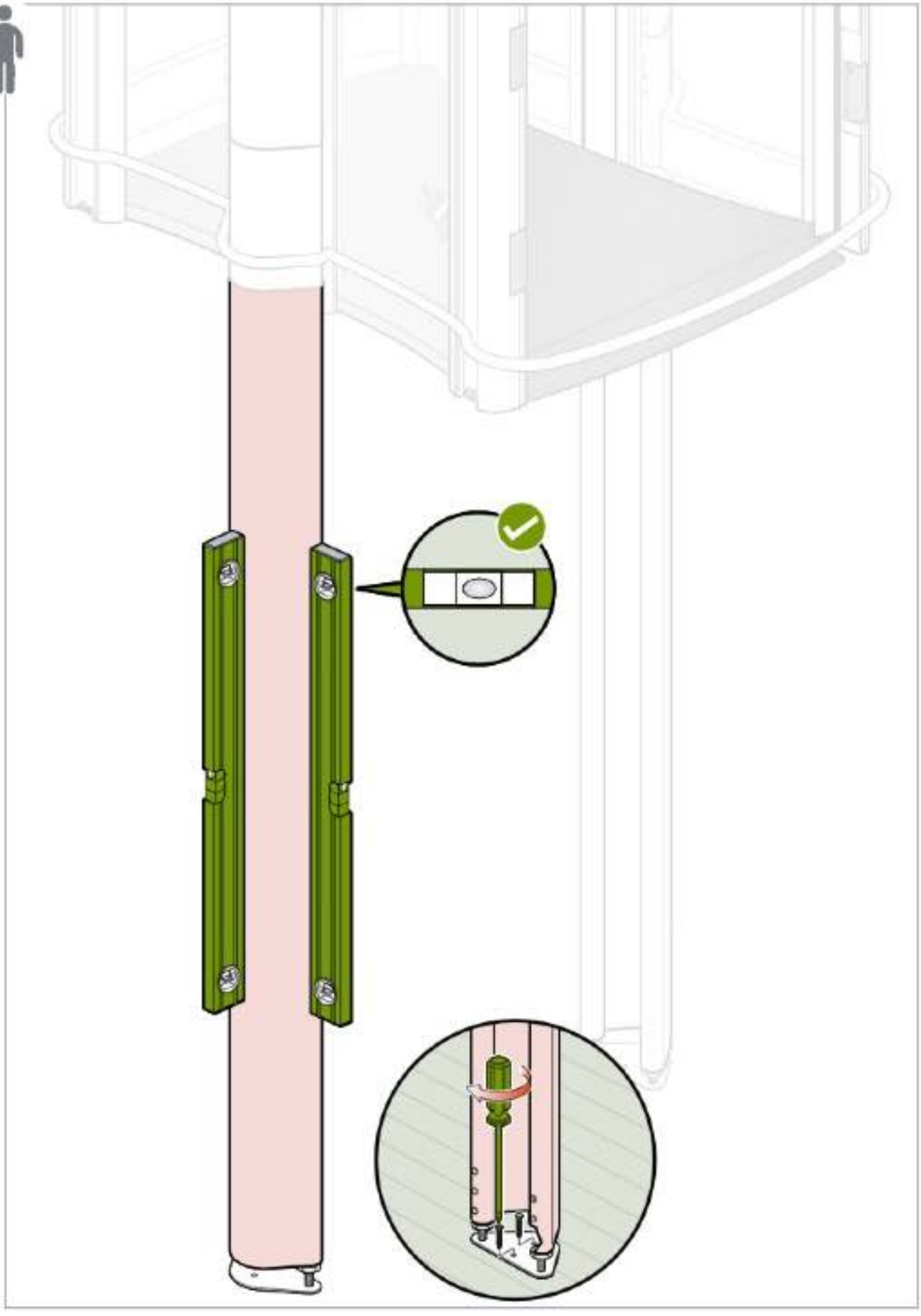



Section 6: Electrical/Mechanical Connections



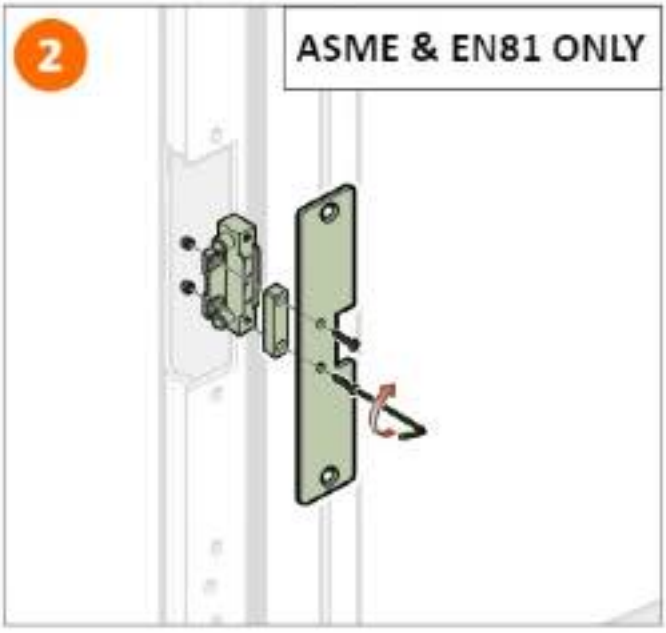

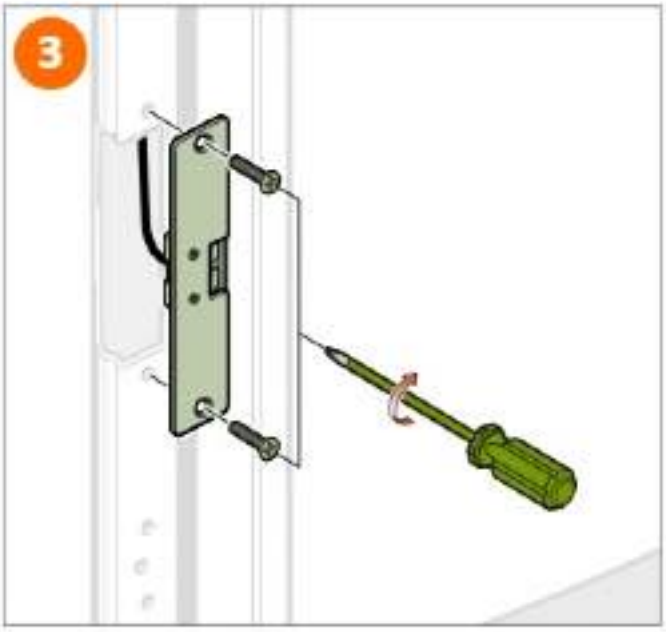

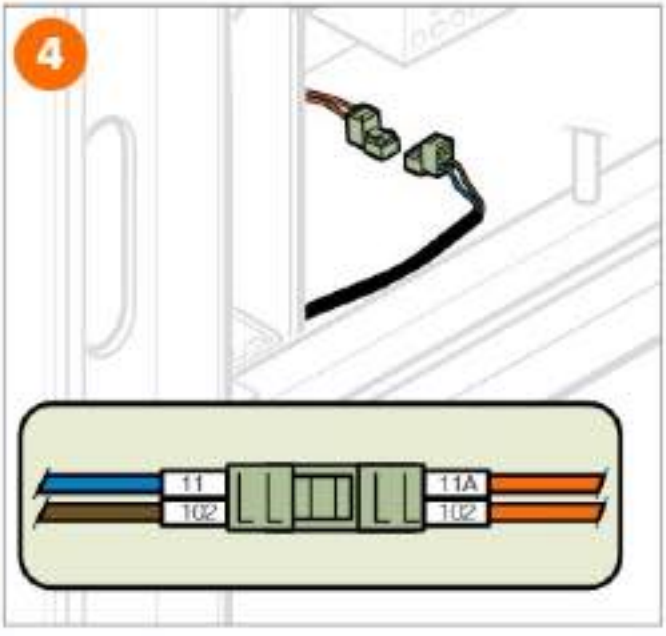

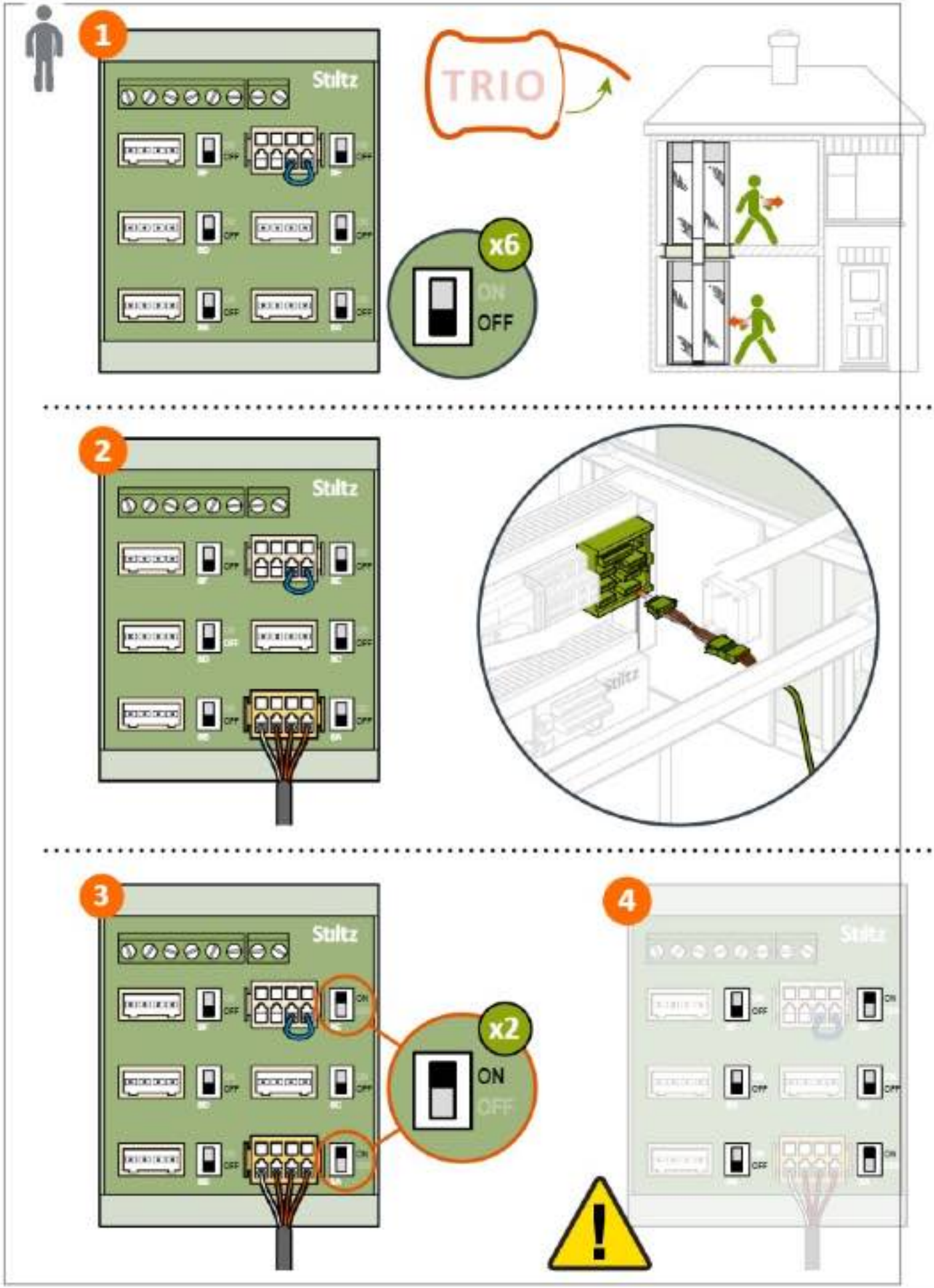
1
Stiltz
TRIO
x6
ON
OFF
2
Stiltz
3
Stiltz
x2
ON
OFF
4
Stiltz

Section 6: Electrical/Mechanical Connections

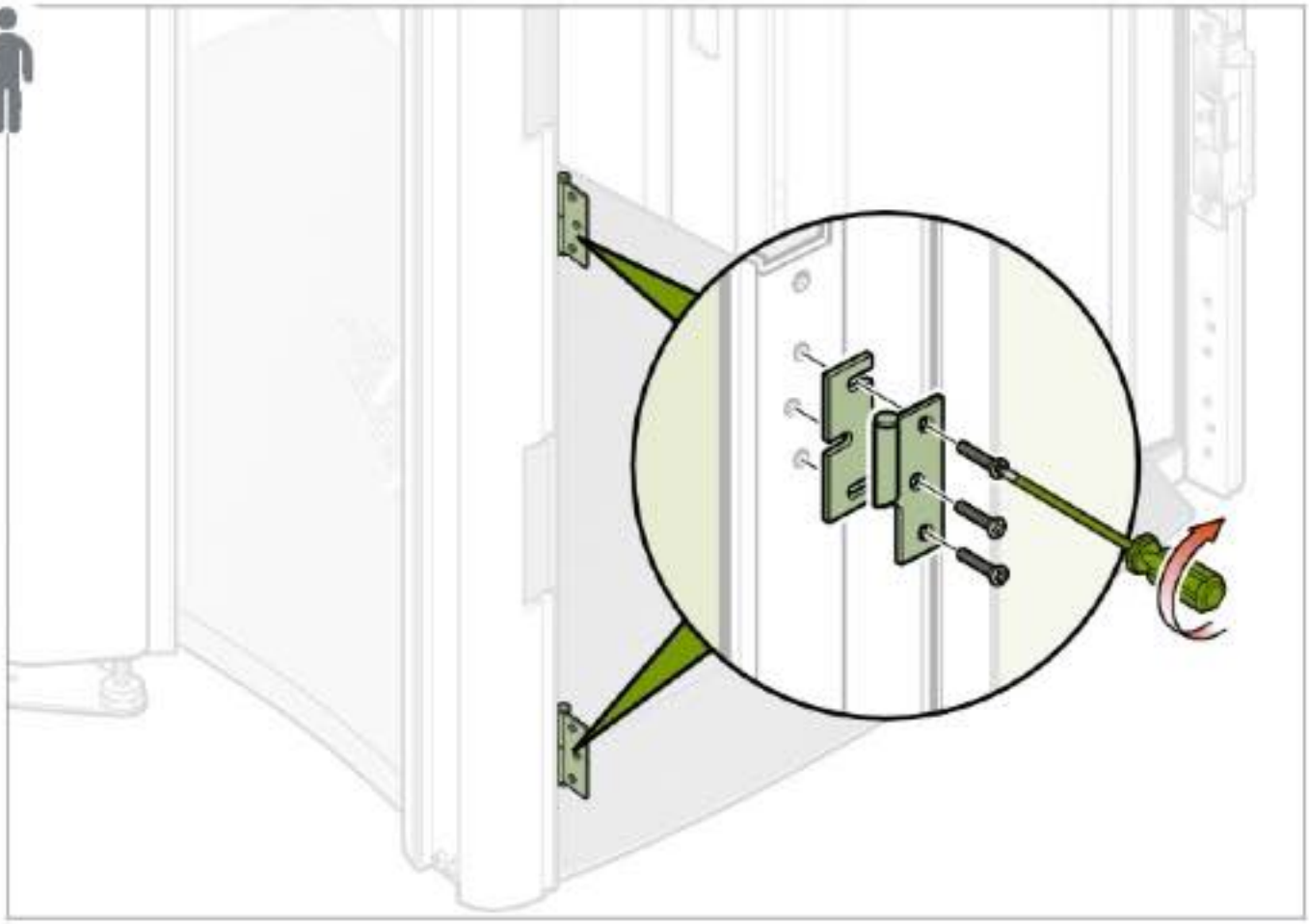

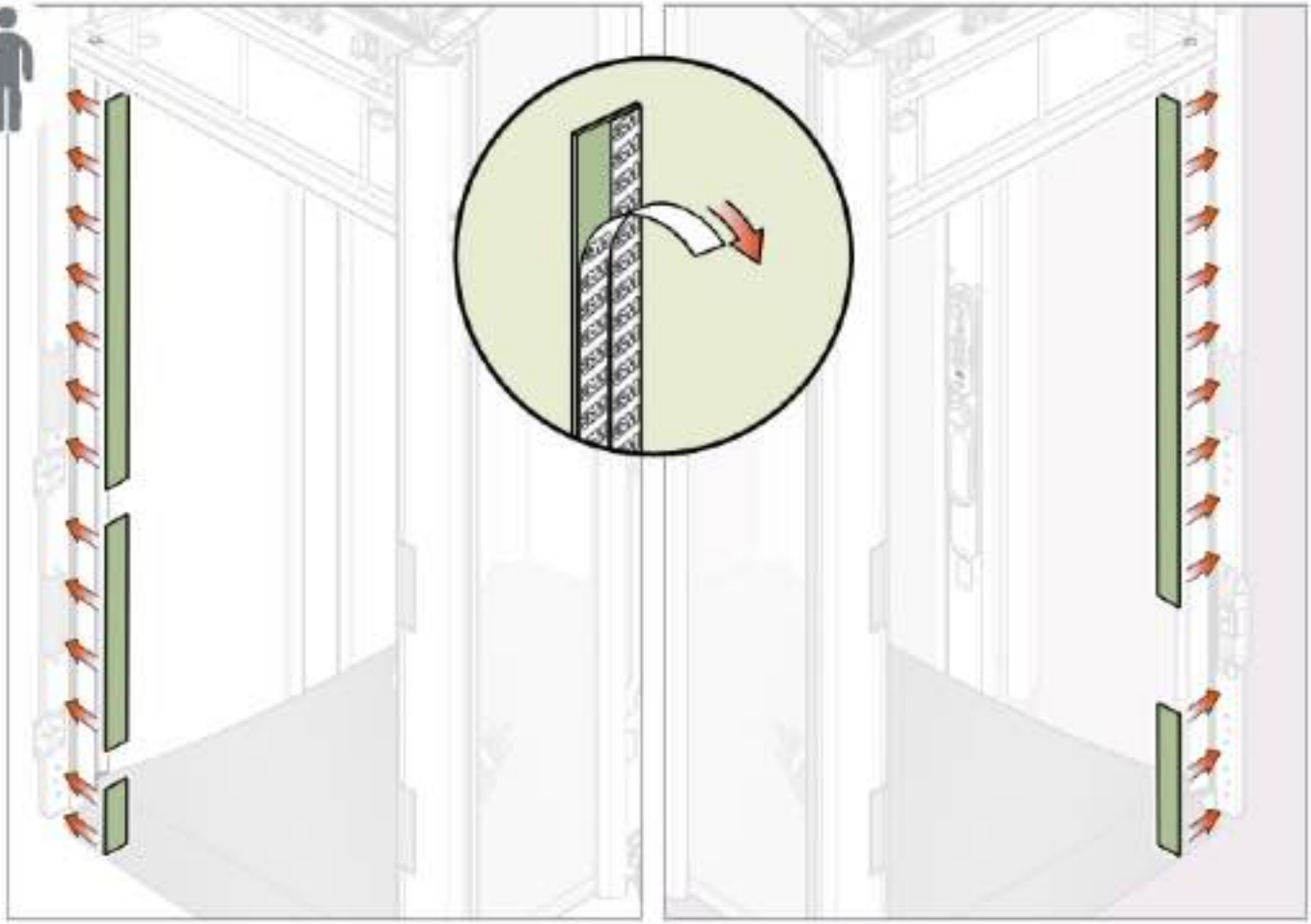

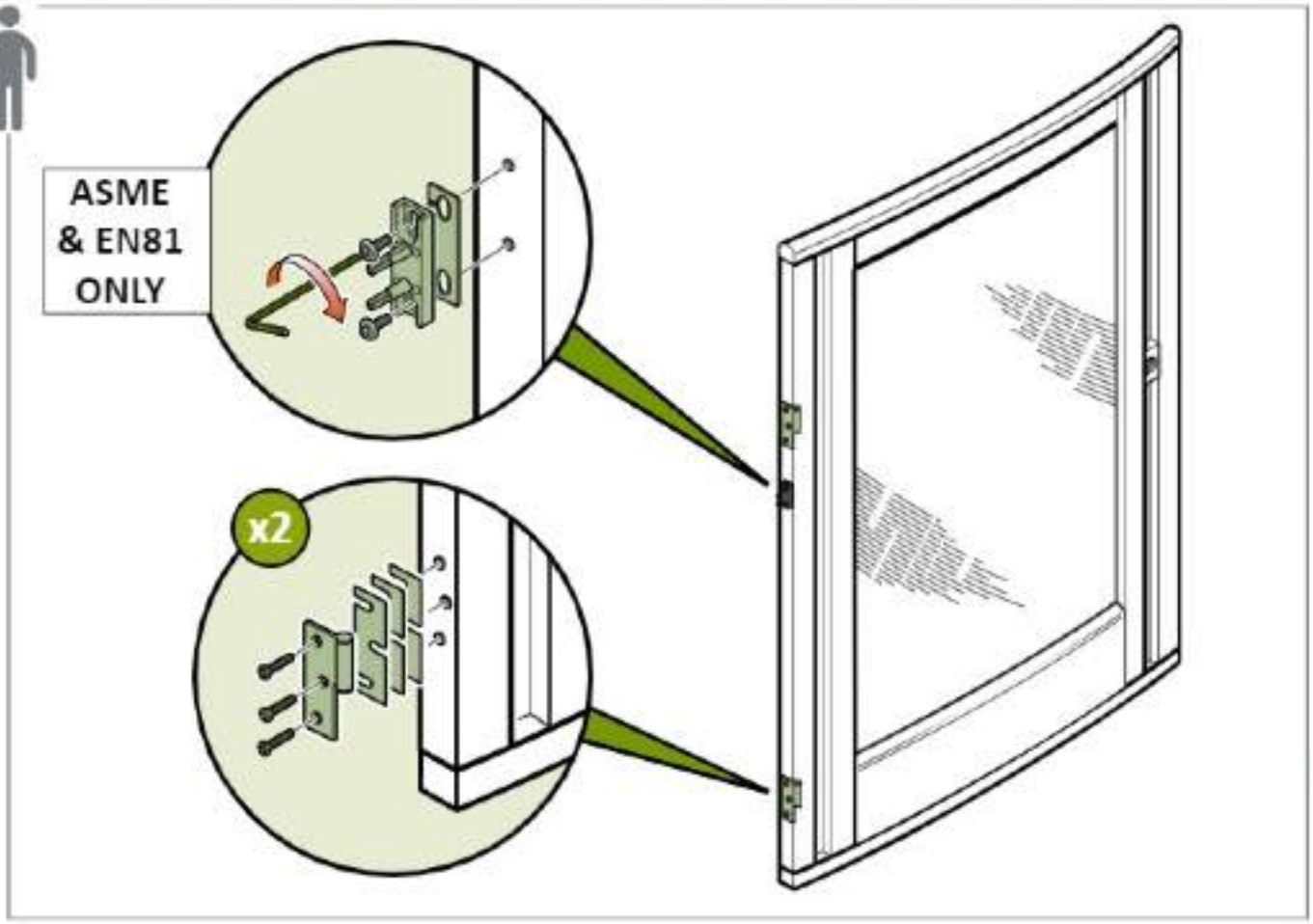
ASME
& EN81
ONLY
x2

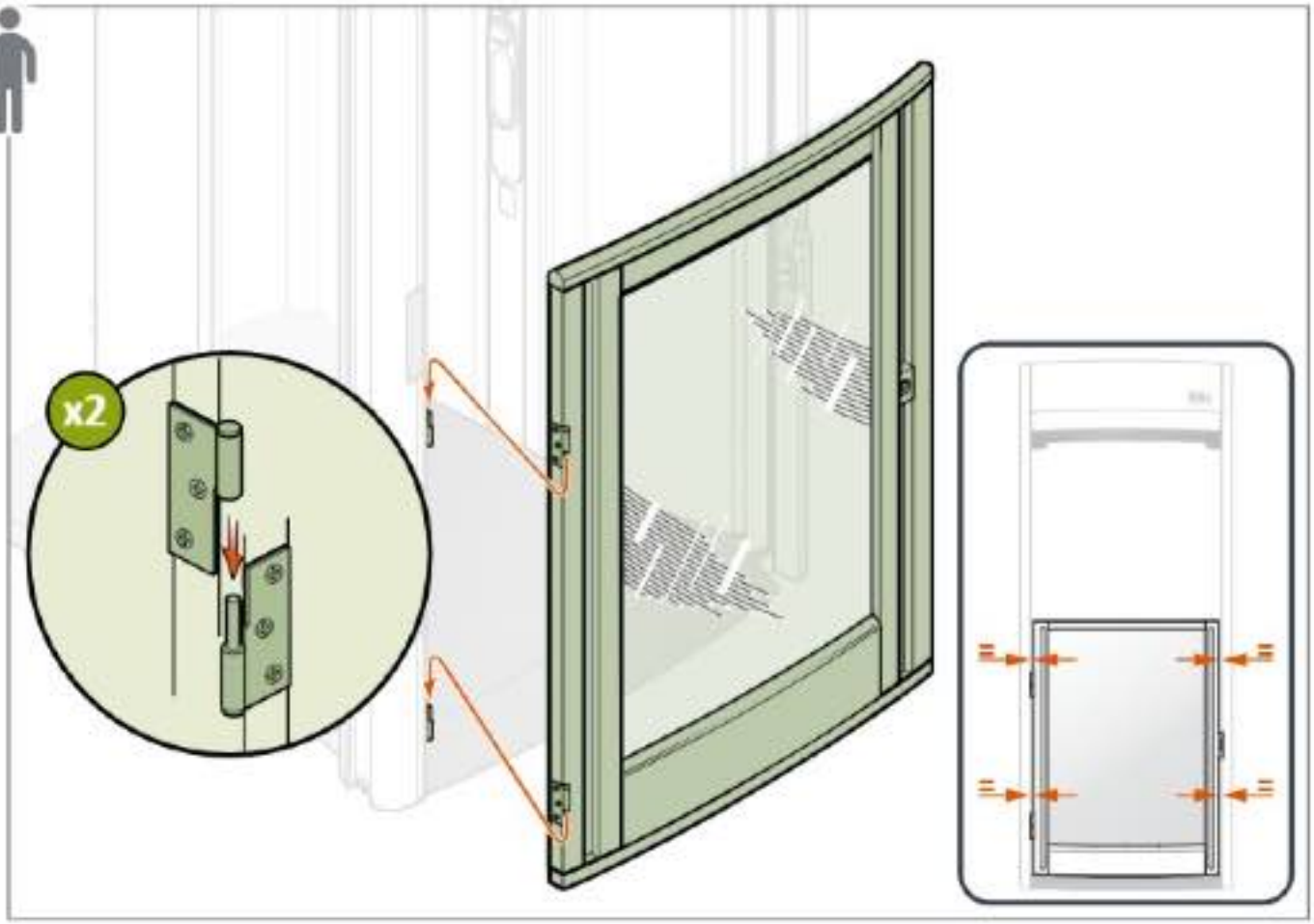
x2

Section 6: Electrical/Mechanical Connections

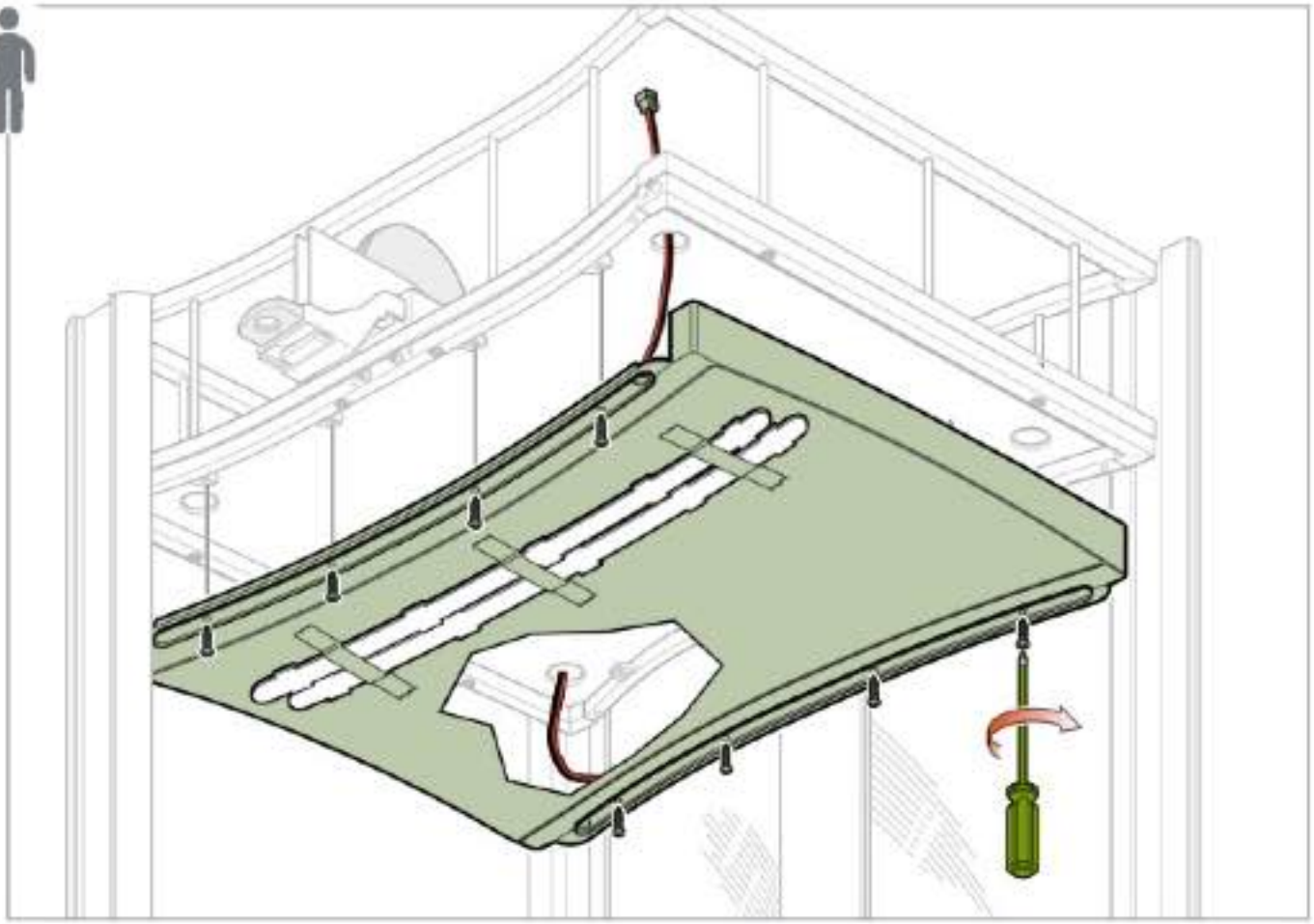

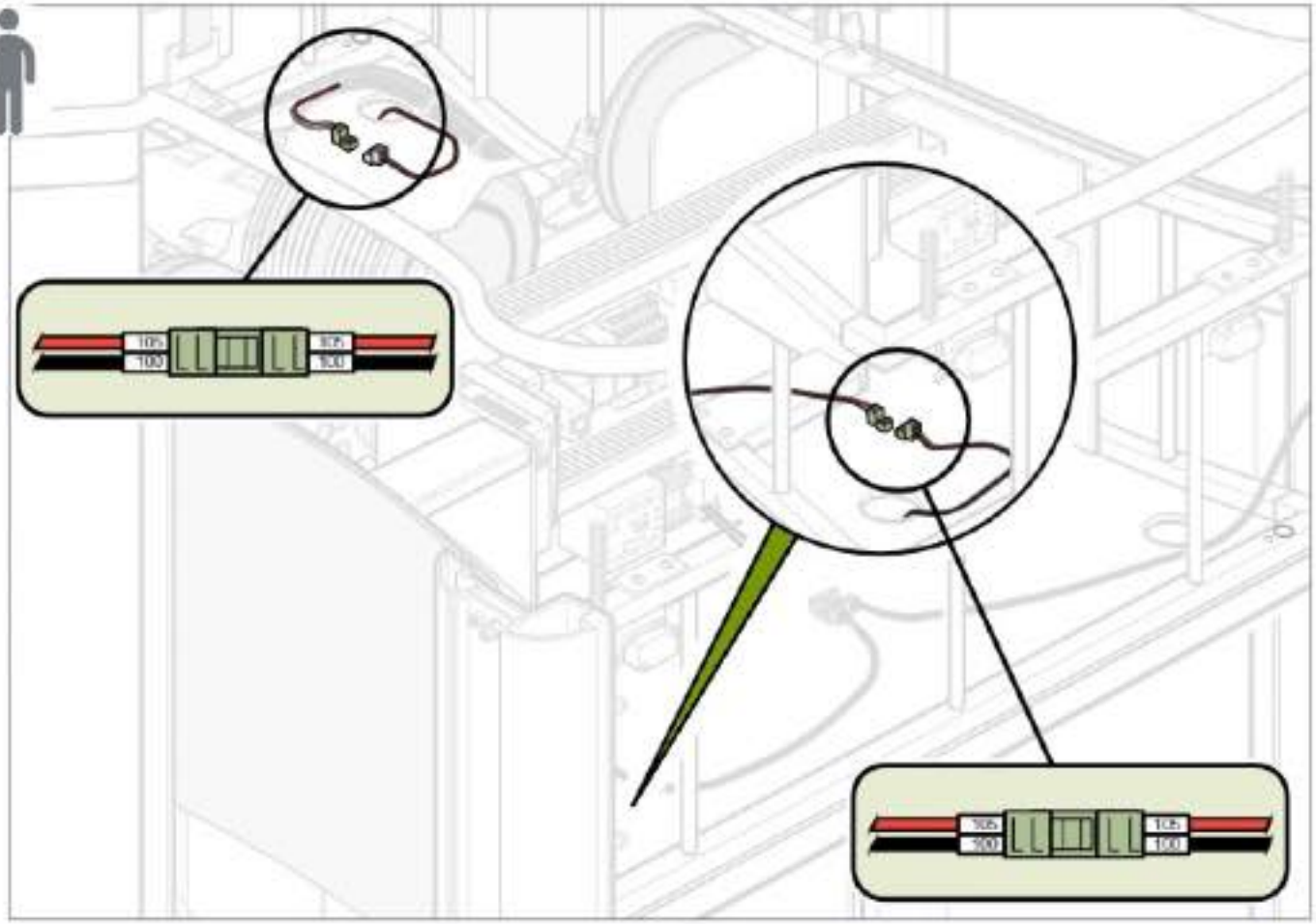

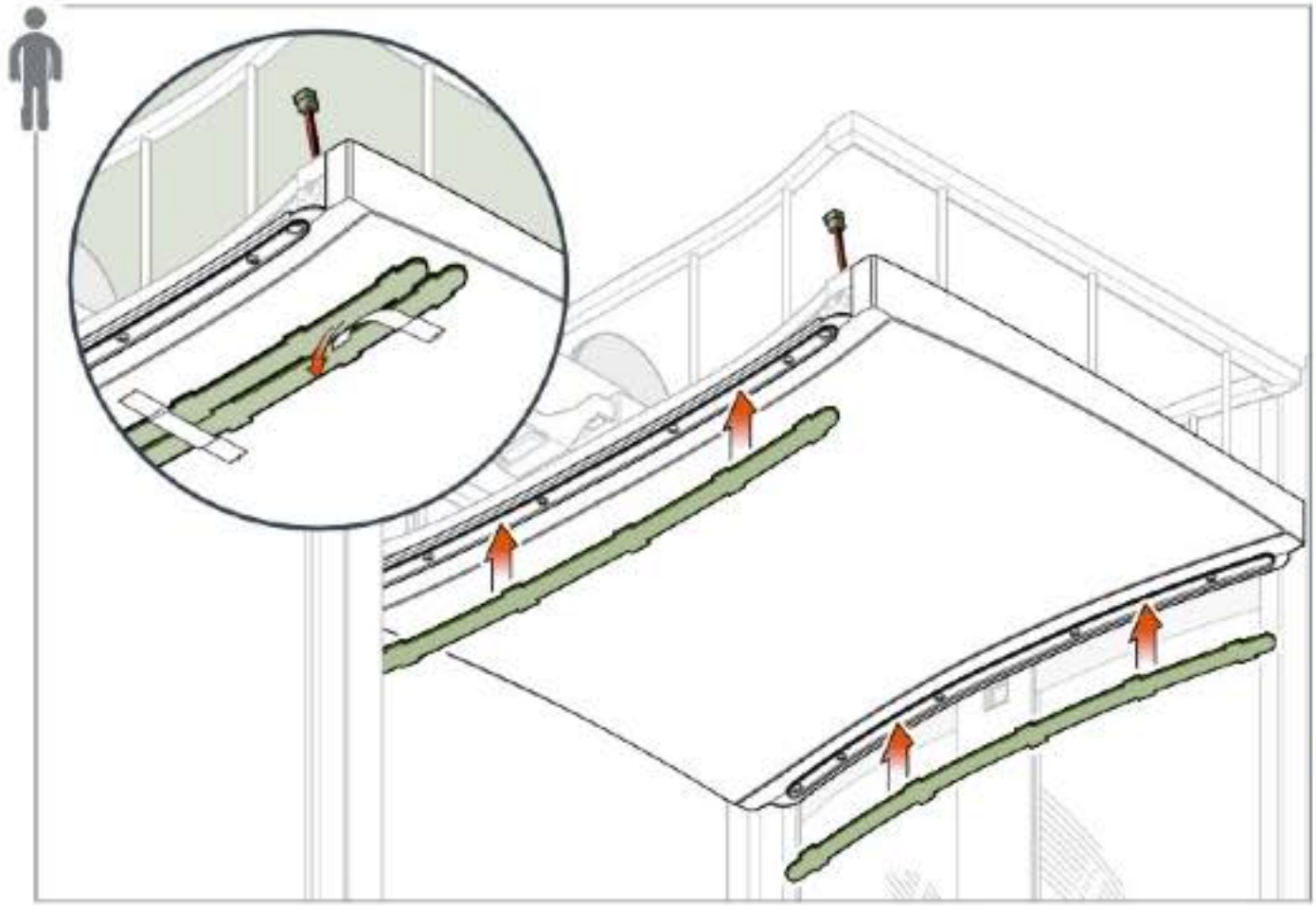

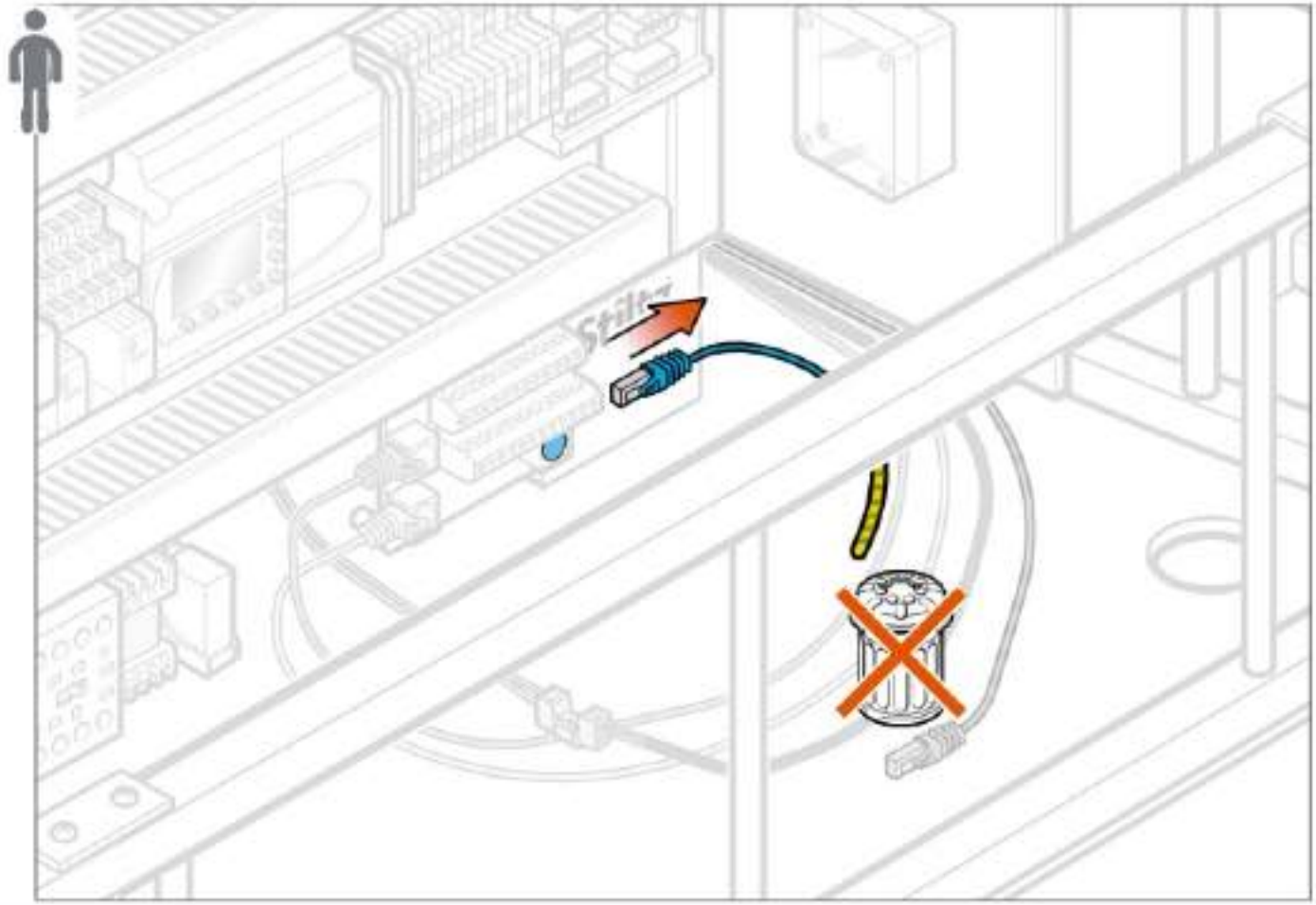
Stiltz

Section 6: Electrical/Mechanical Connections

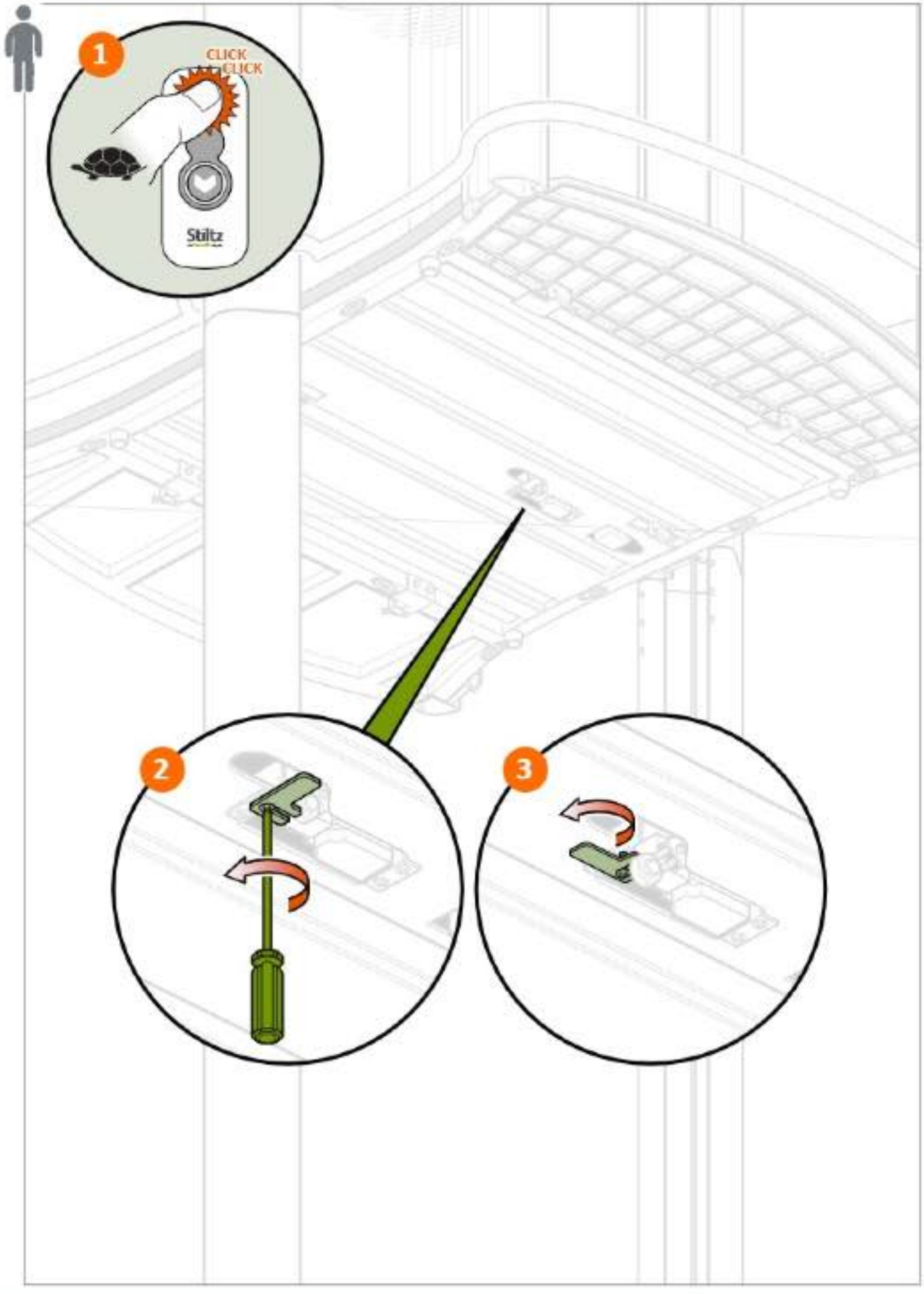

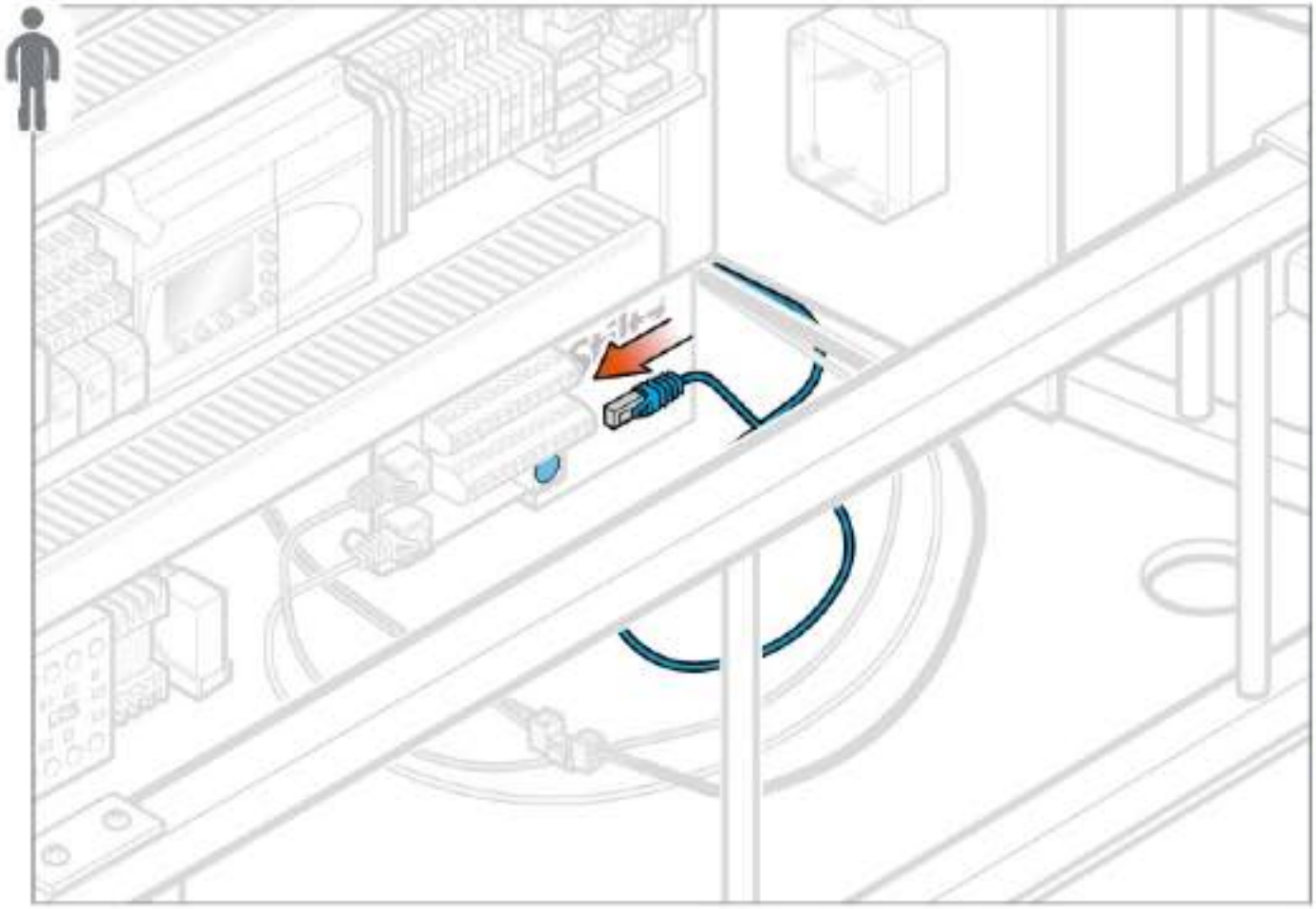

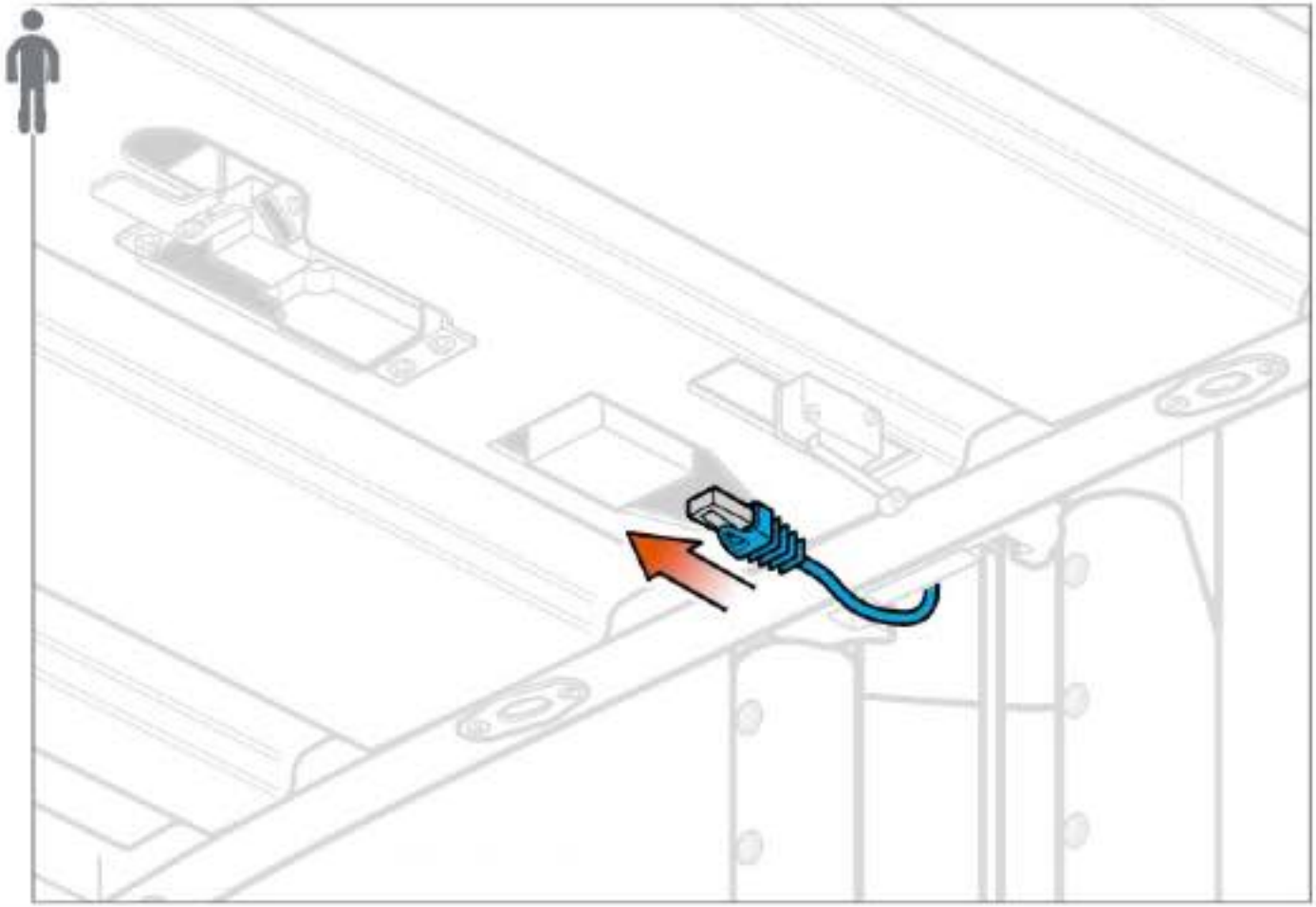

Installation Guidelines

Stiltz™ Homelifts

SECTION 7
Finishing Up Electro/ Mechanical

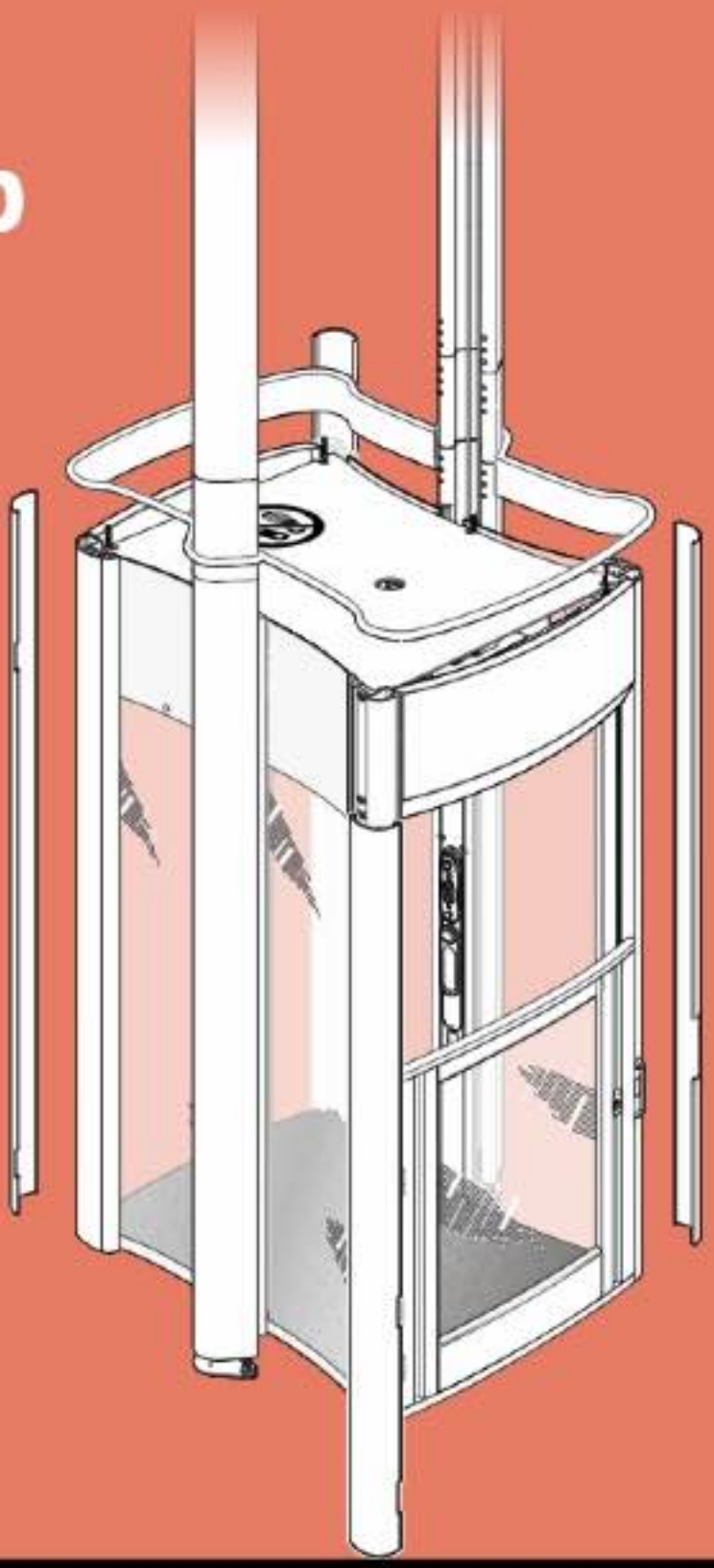

INSTALLATION GUIDELINES

Section 7: Finishing Up Electrical/Mechanical

Supplied with Installation Kit (sold separately)

30113-00048
T Type Allen Key 4mm



Tools Required

Power Drill



Drill Bits



Allen Keys (Metric)



Spirit Level



Pop Rivet Gun



Cross Screwdriver



Flat Screwdriver



Spanners



Stanley Knife



Spray Lubricant



Electrical Multi Meter



Steps



PH2 + PH3 Bits

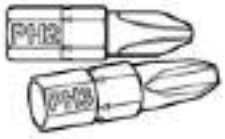

Long Nose Pliers



Vacuum Cleaner



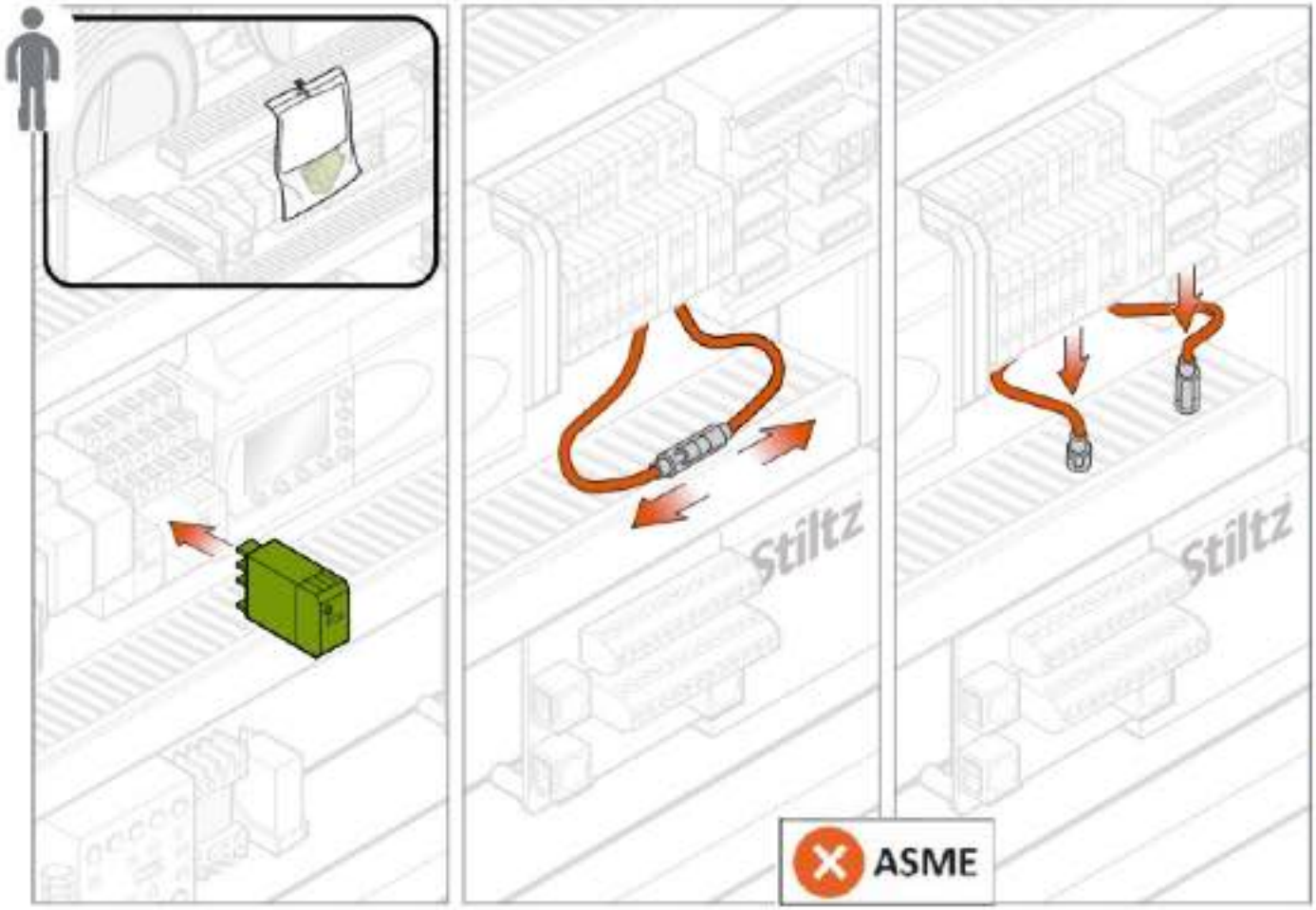
Stiltz
Stiltz
ASME

Section 7: Finishing Up Electrical/Mechanical

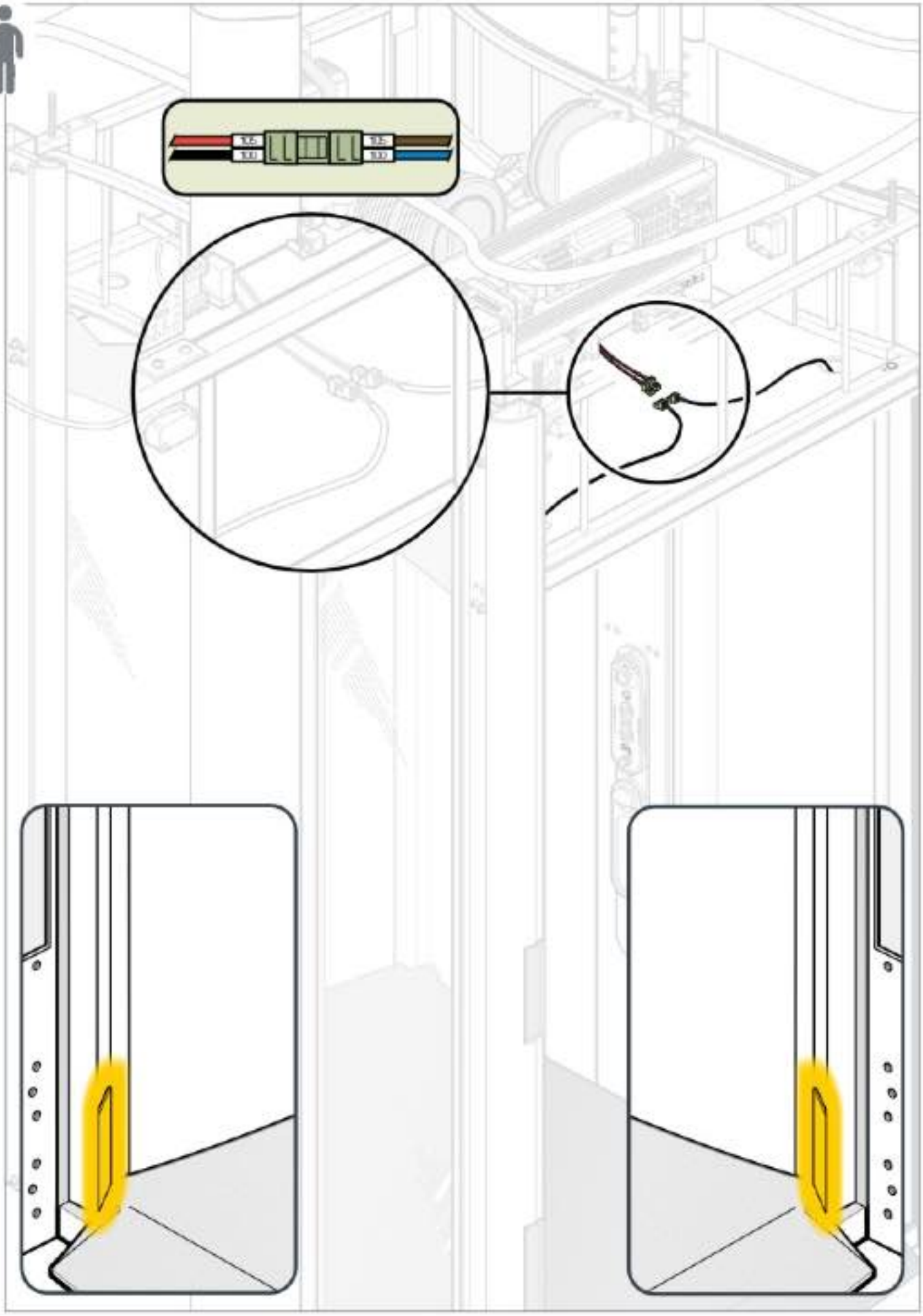

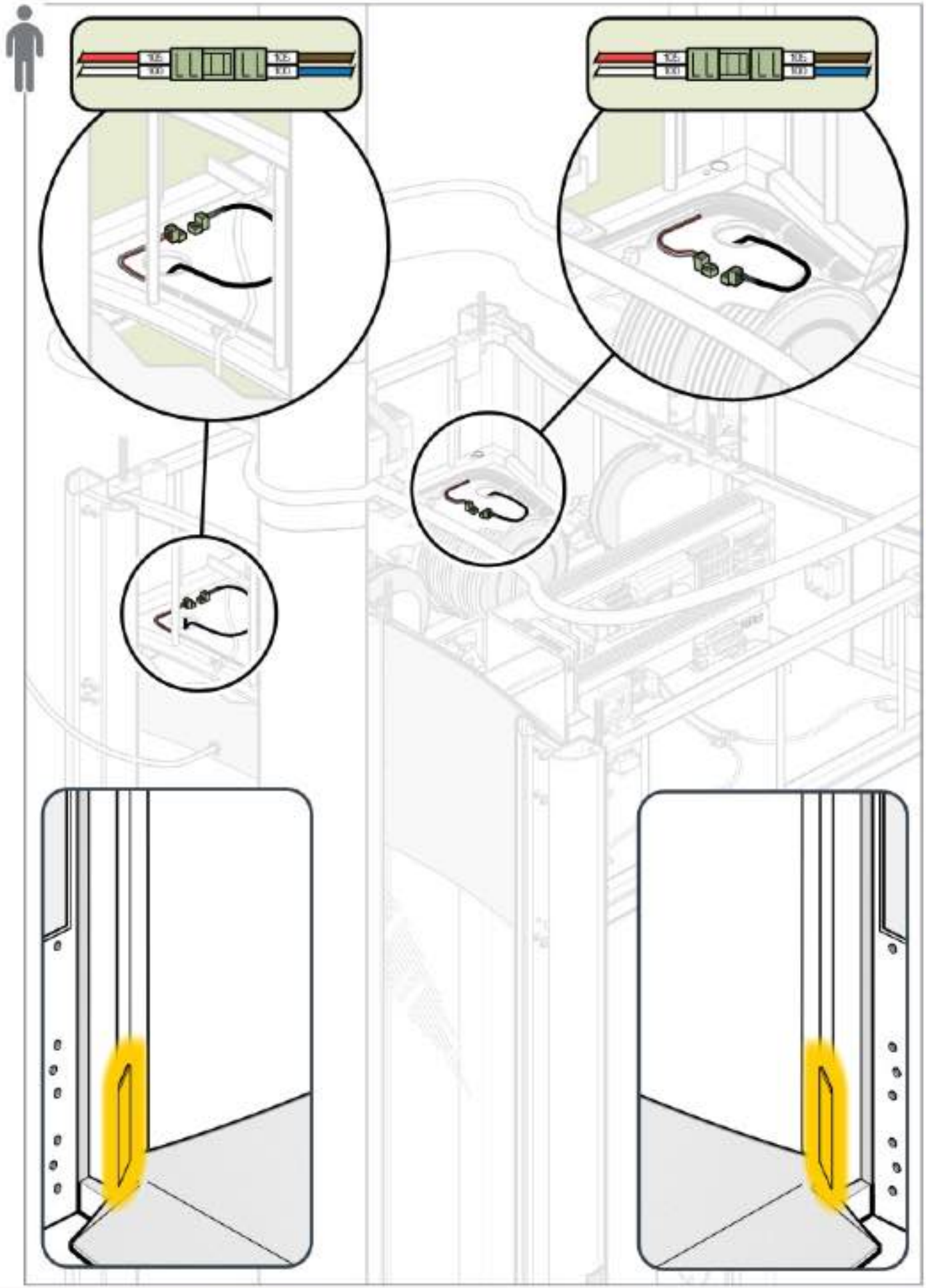

Section 7: Finishing Up Electrical/Mechanical

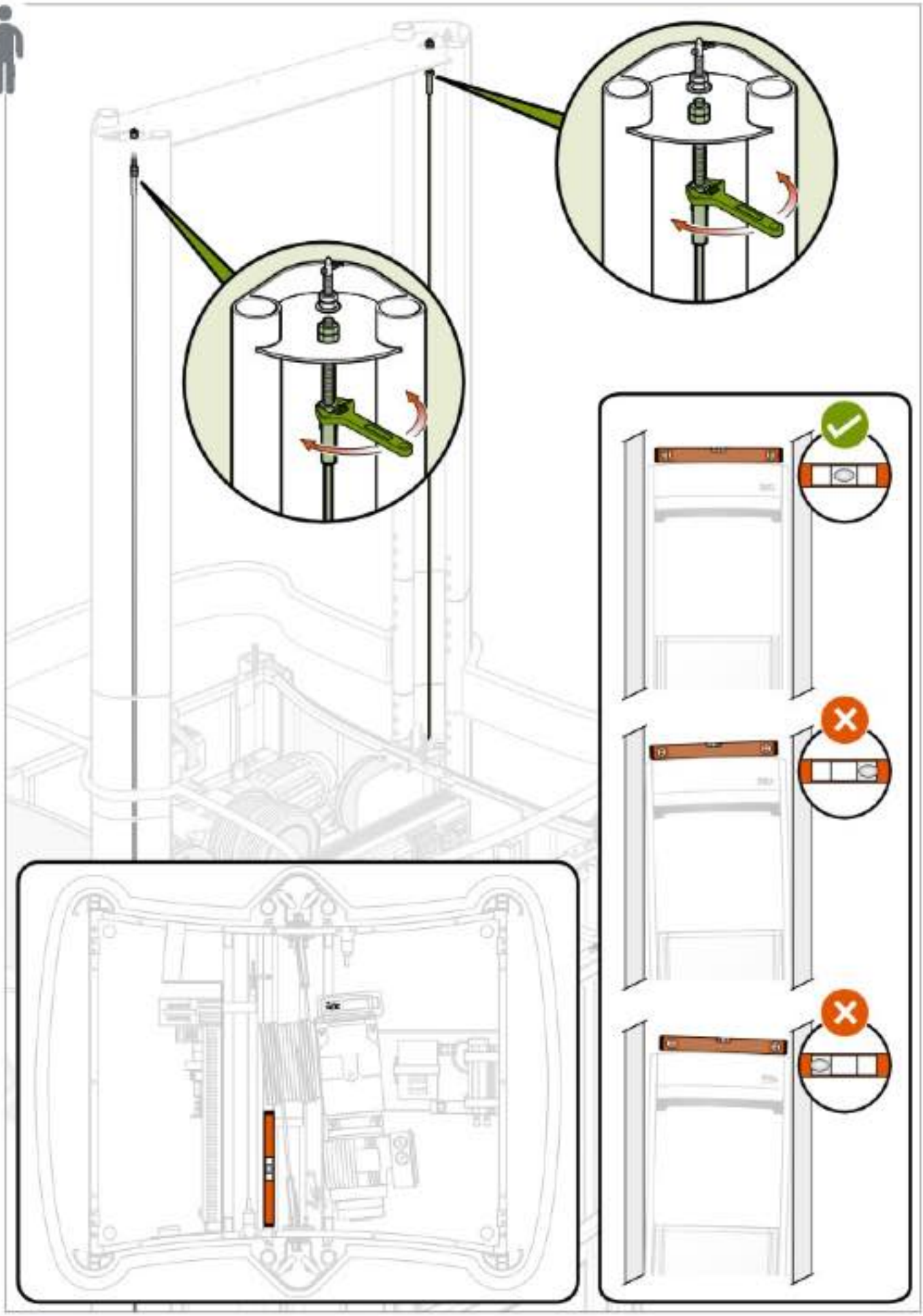

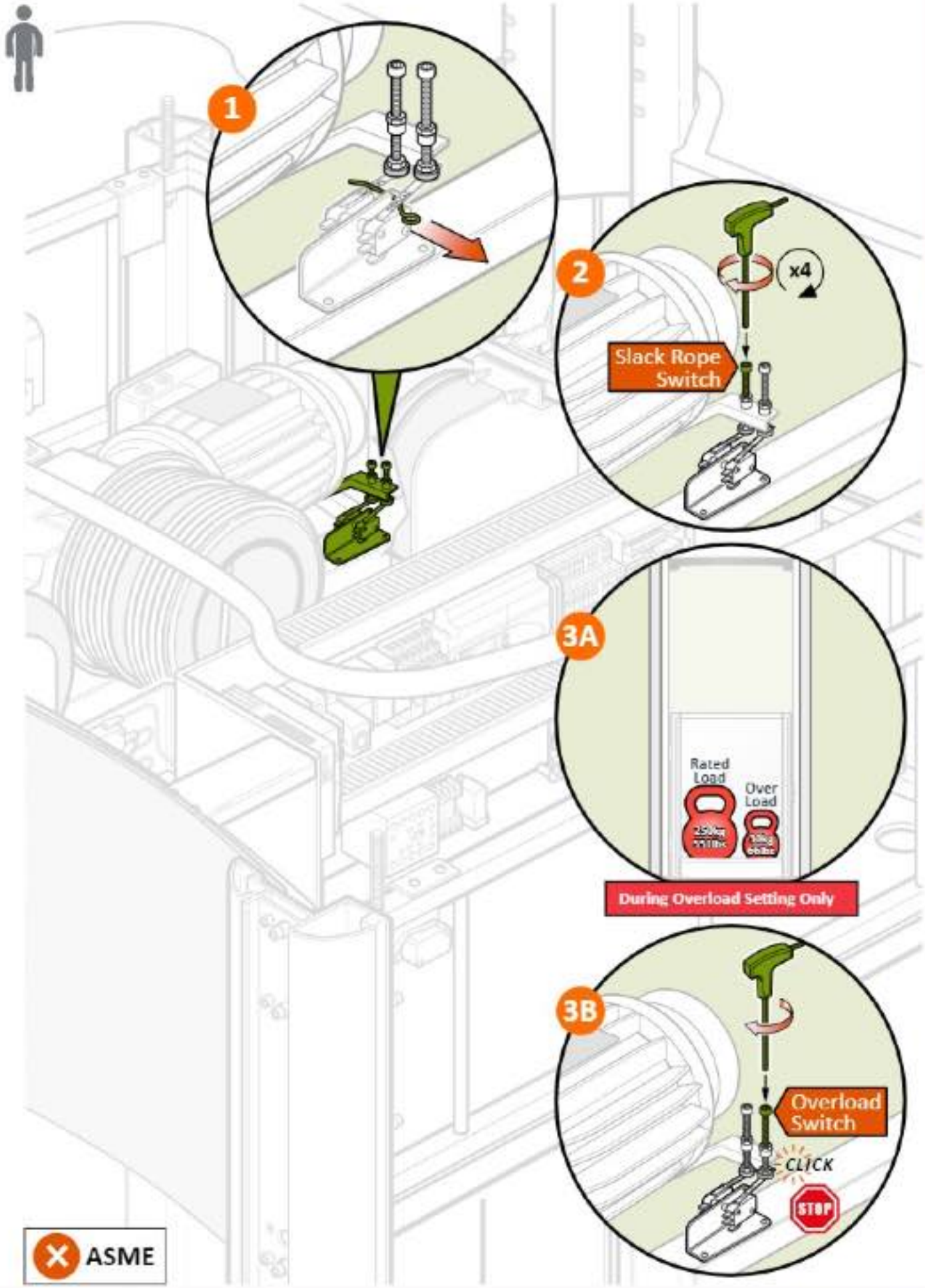
1
2
x4
Slack Rope Switch
3A
Rated Load
Over Load
During Overload Setting Only
3B
Overload Switch
CLICK
STOP
ASME

Section 4: Hoist Preparation

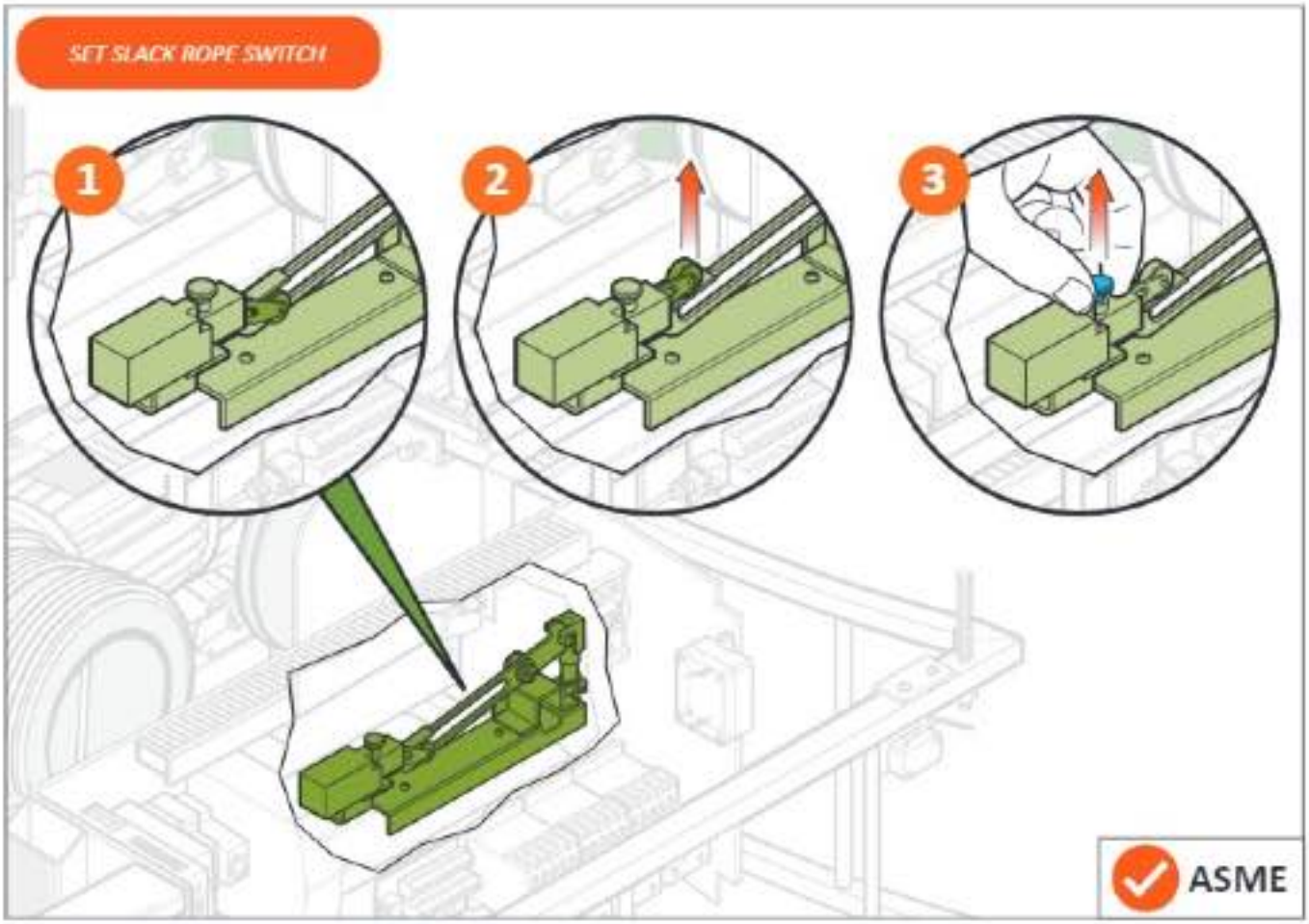

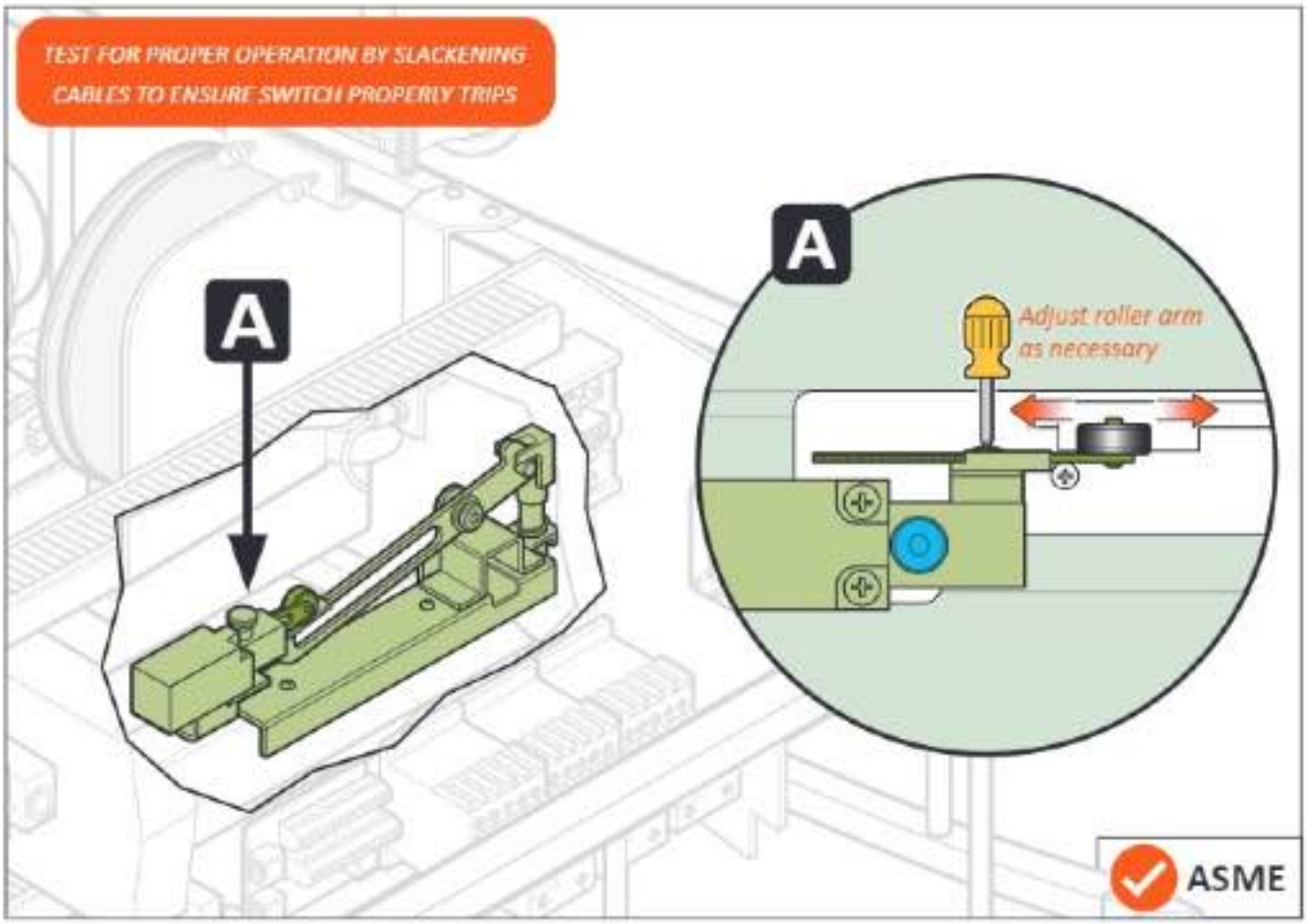

Section 7: Finishing Up Electrical/Mechanical

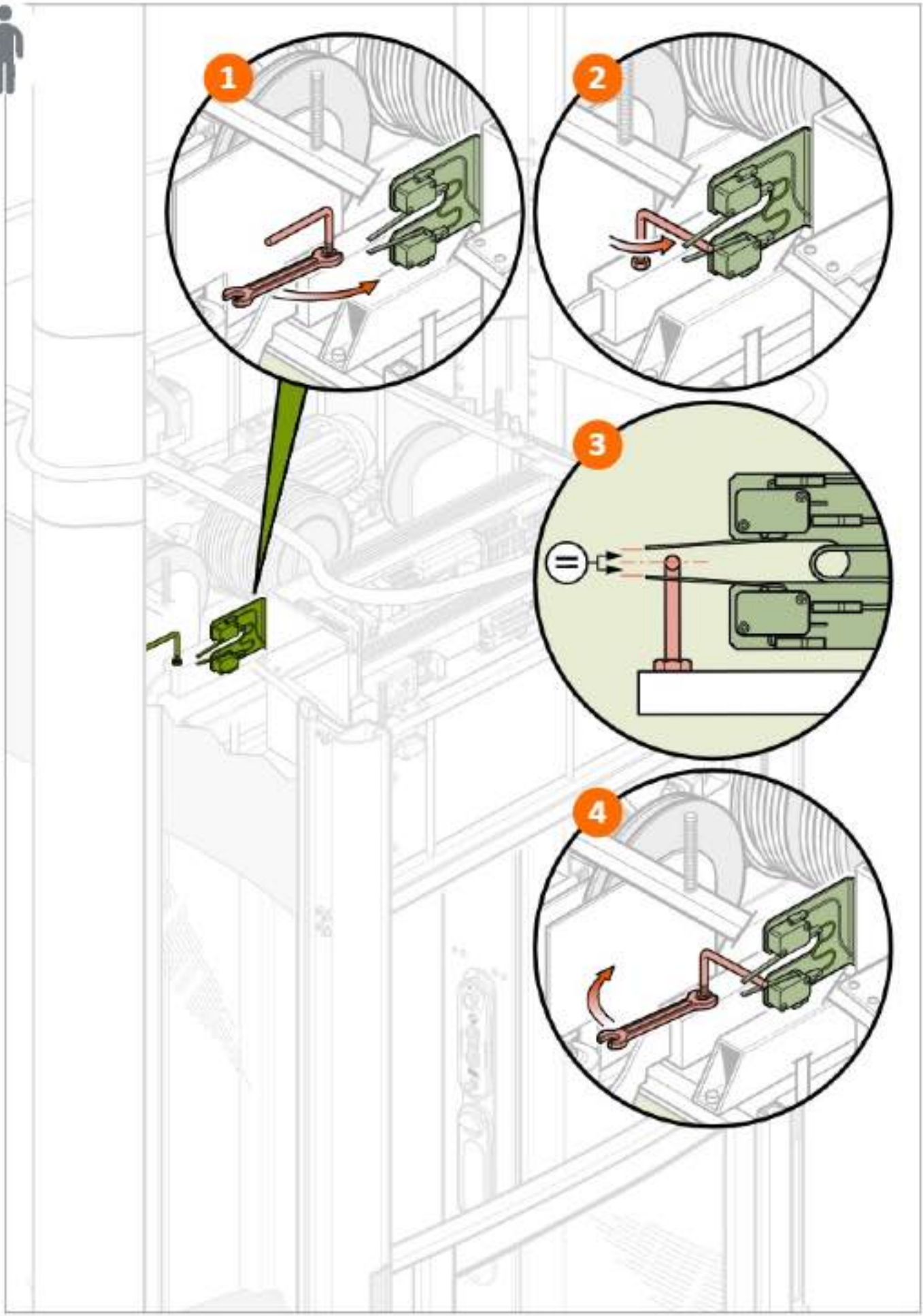

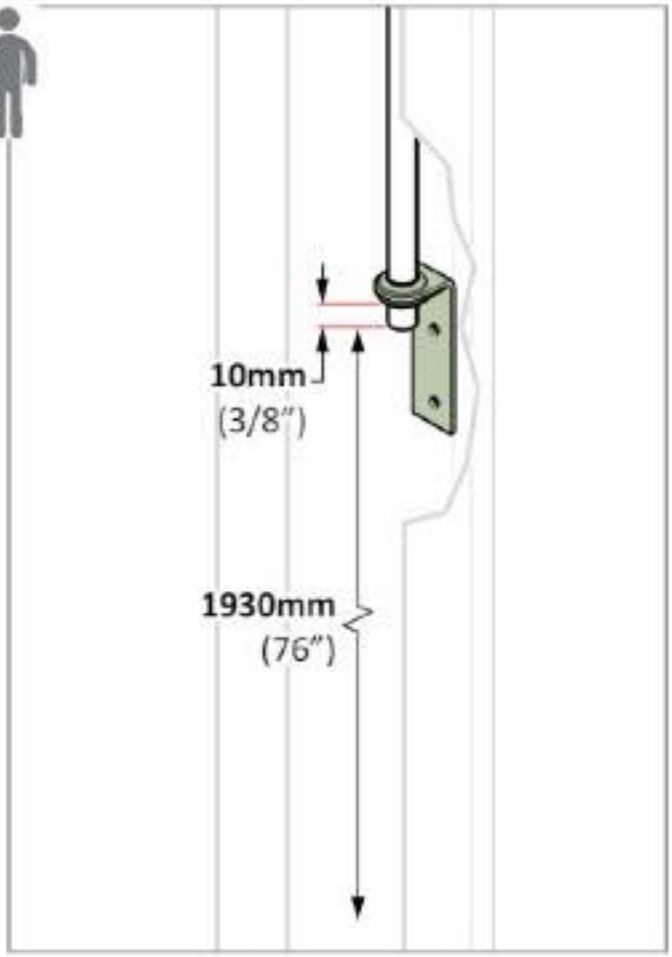
10mm
(3/8")
1930mm
(76")

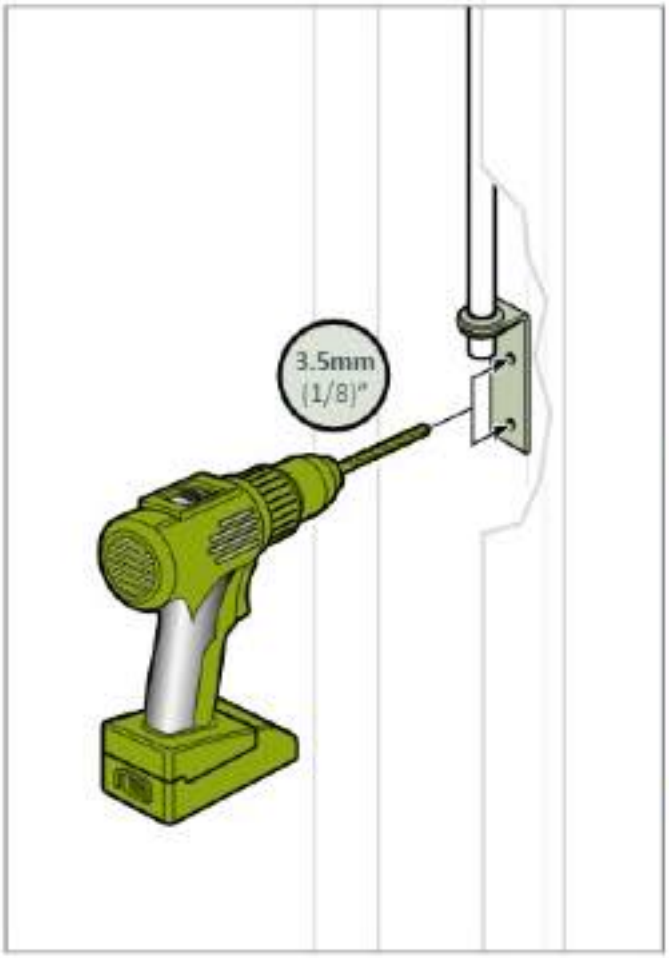
3.5mm
(1/8")

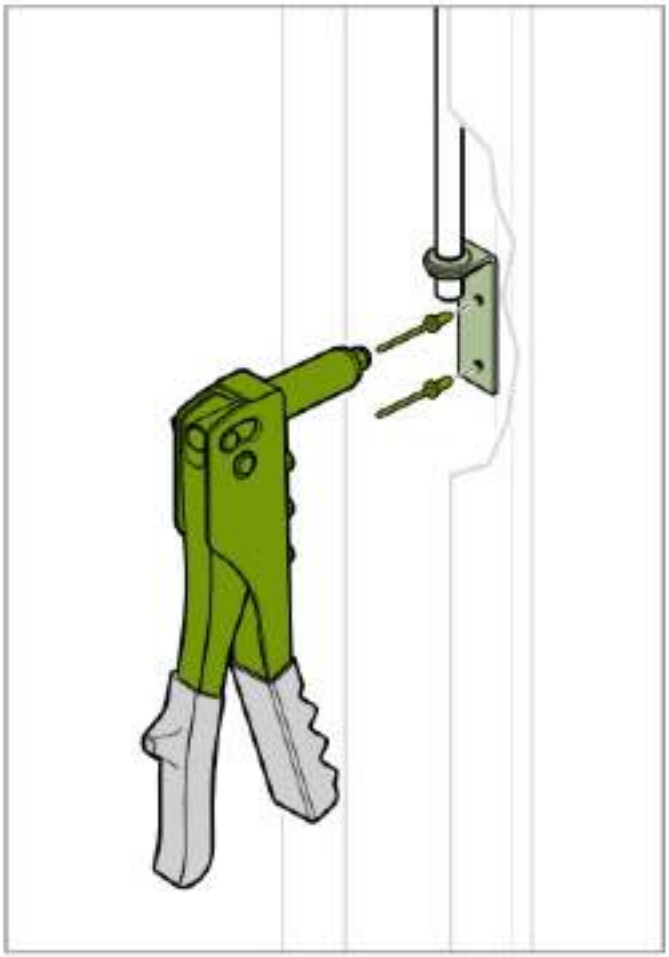

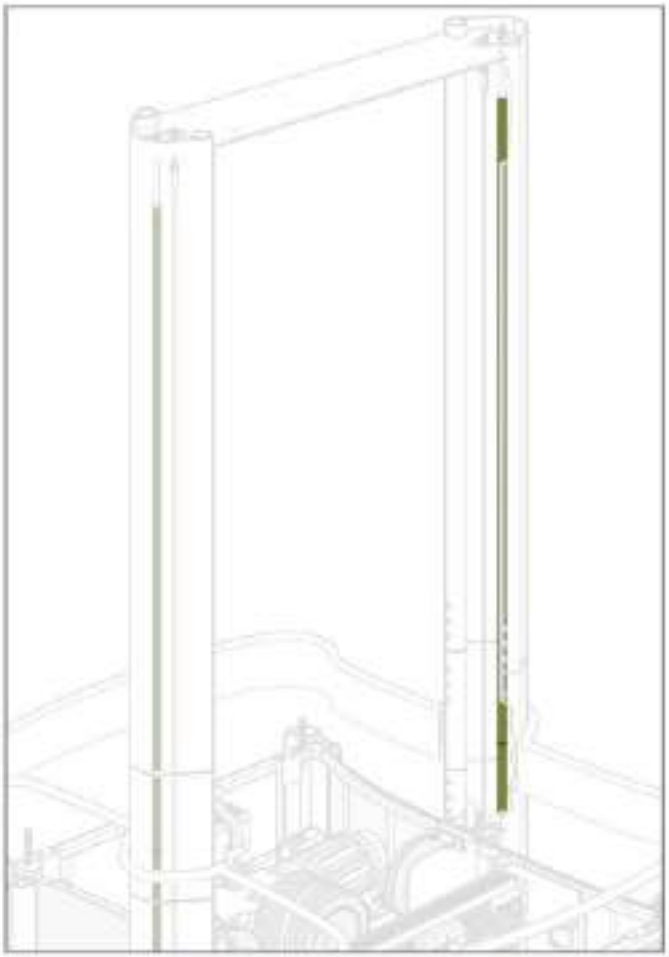

Section 7: Finishing Up Electrical/Mechanical

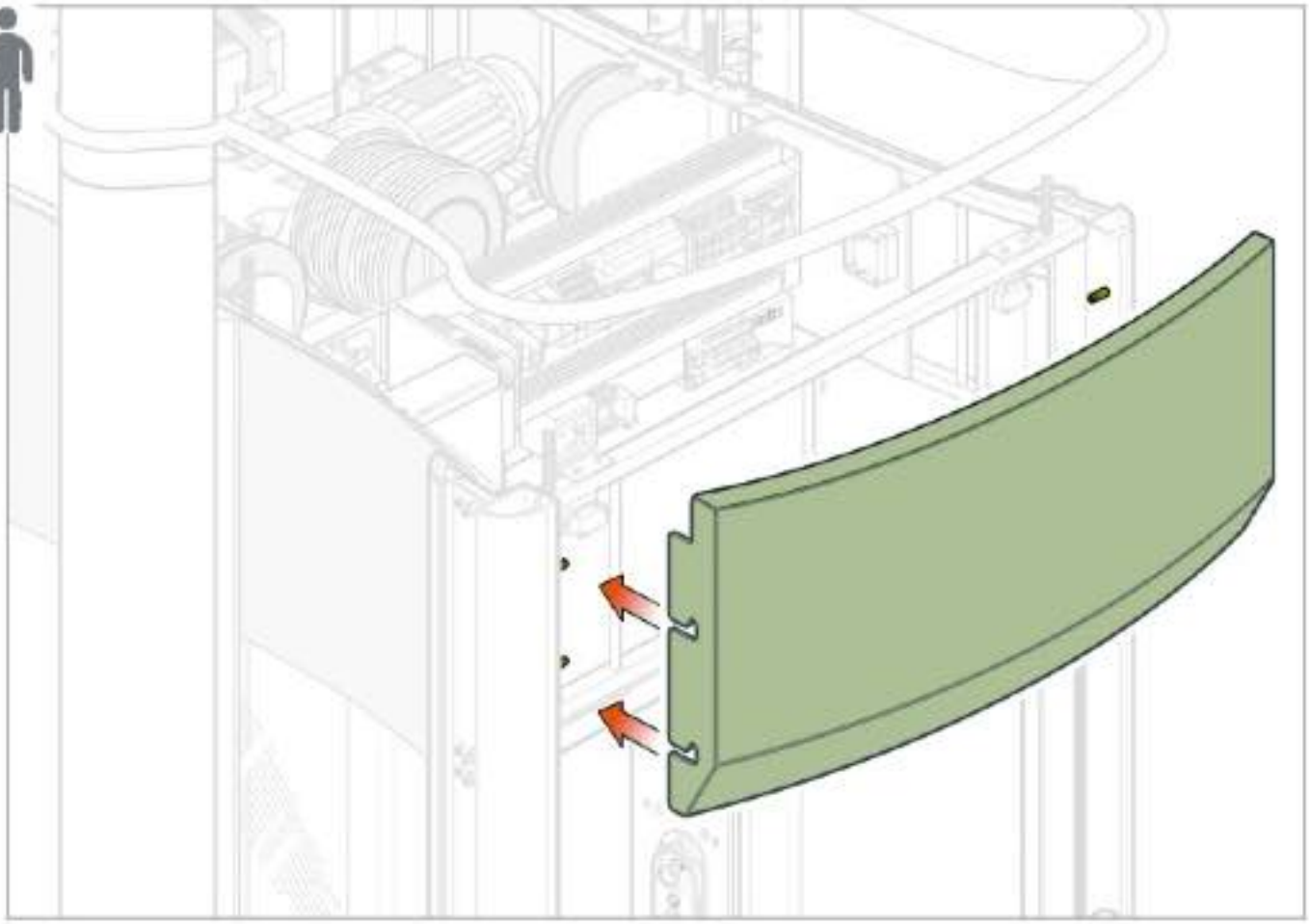

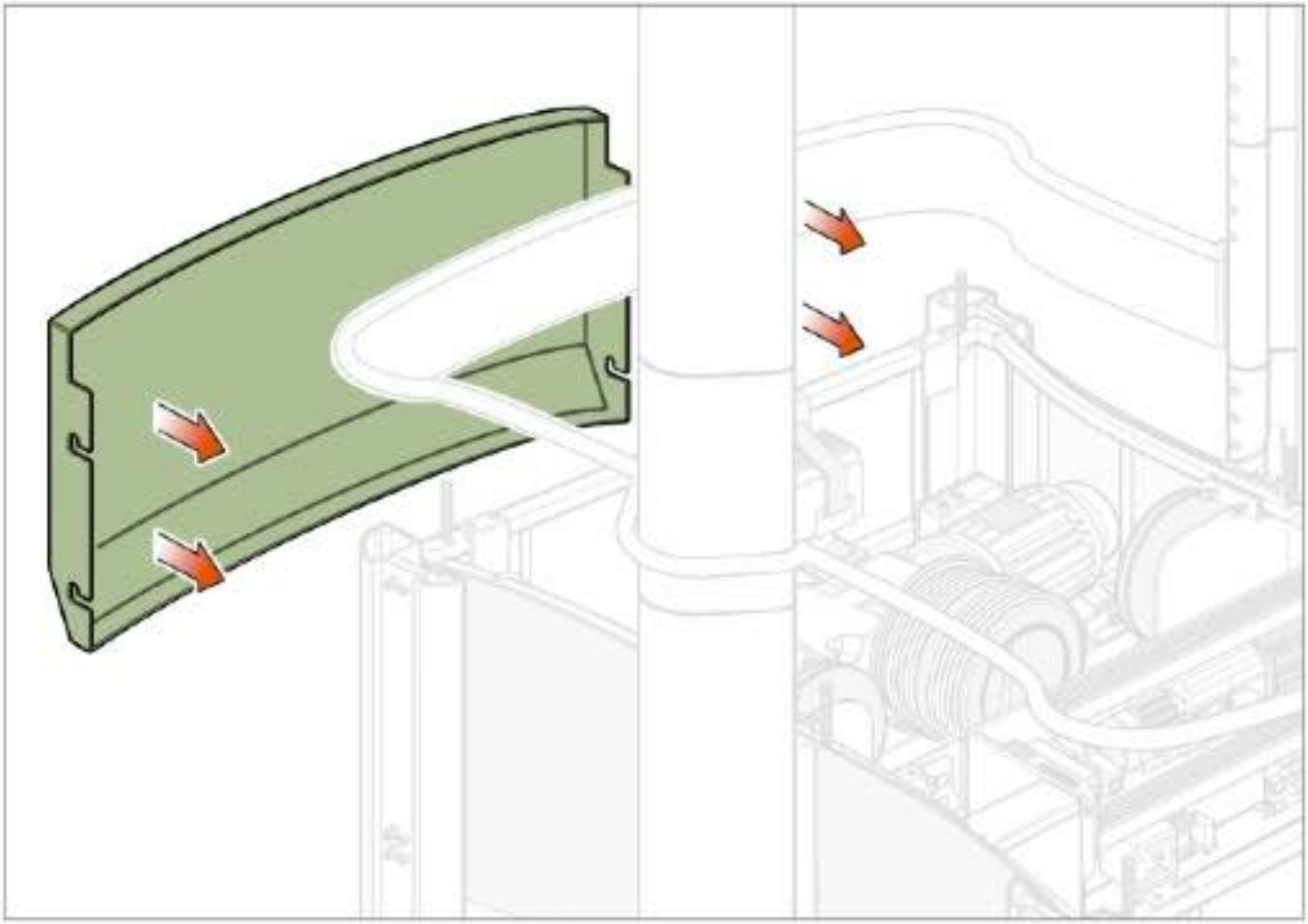

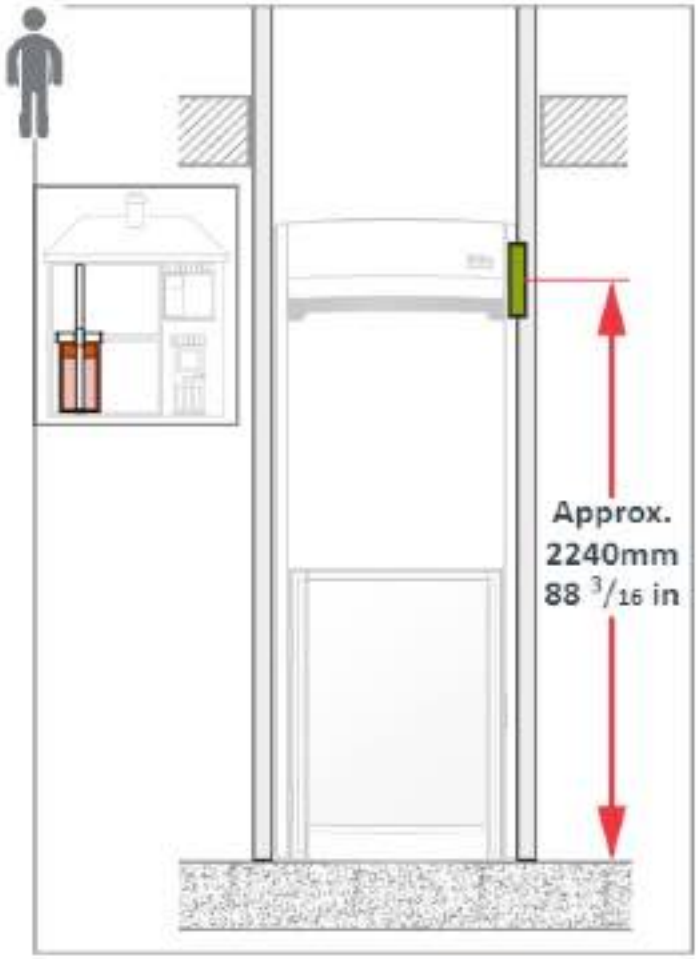
Approx.
2240mm
88 3/16 in

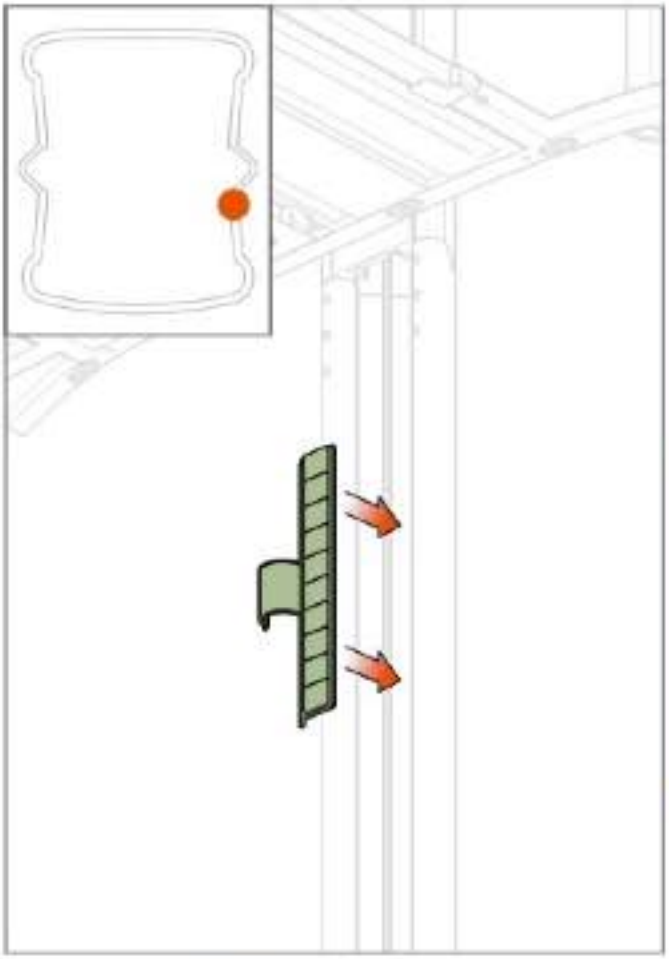

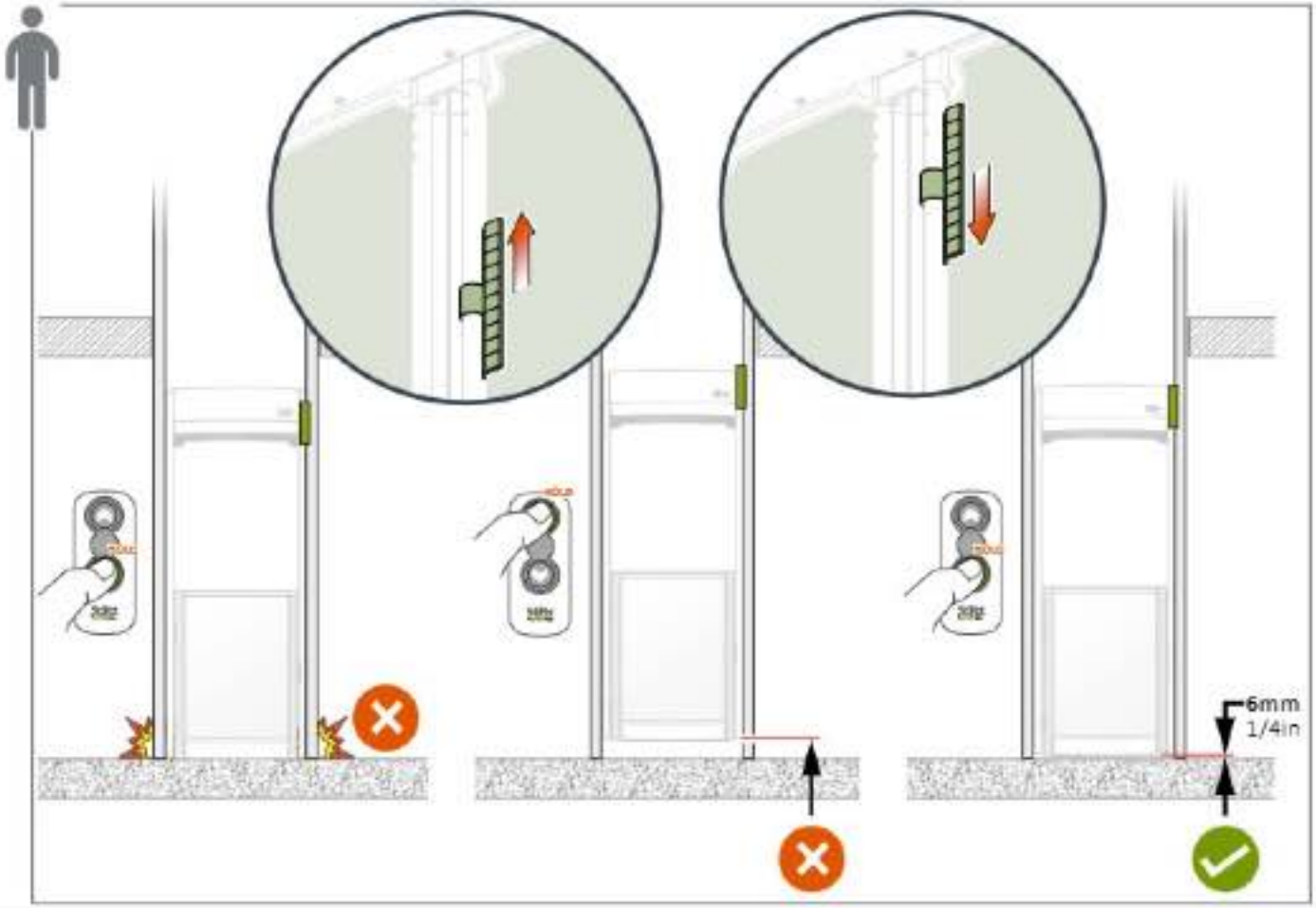
6mm
1/4in

Section 7: Finishing Up Electrical/Mechanical

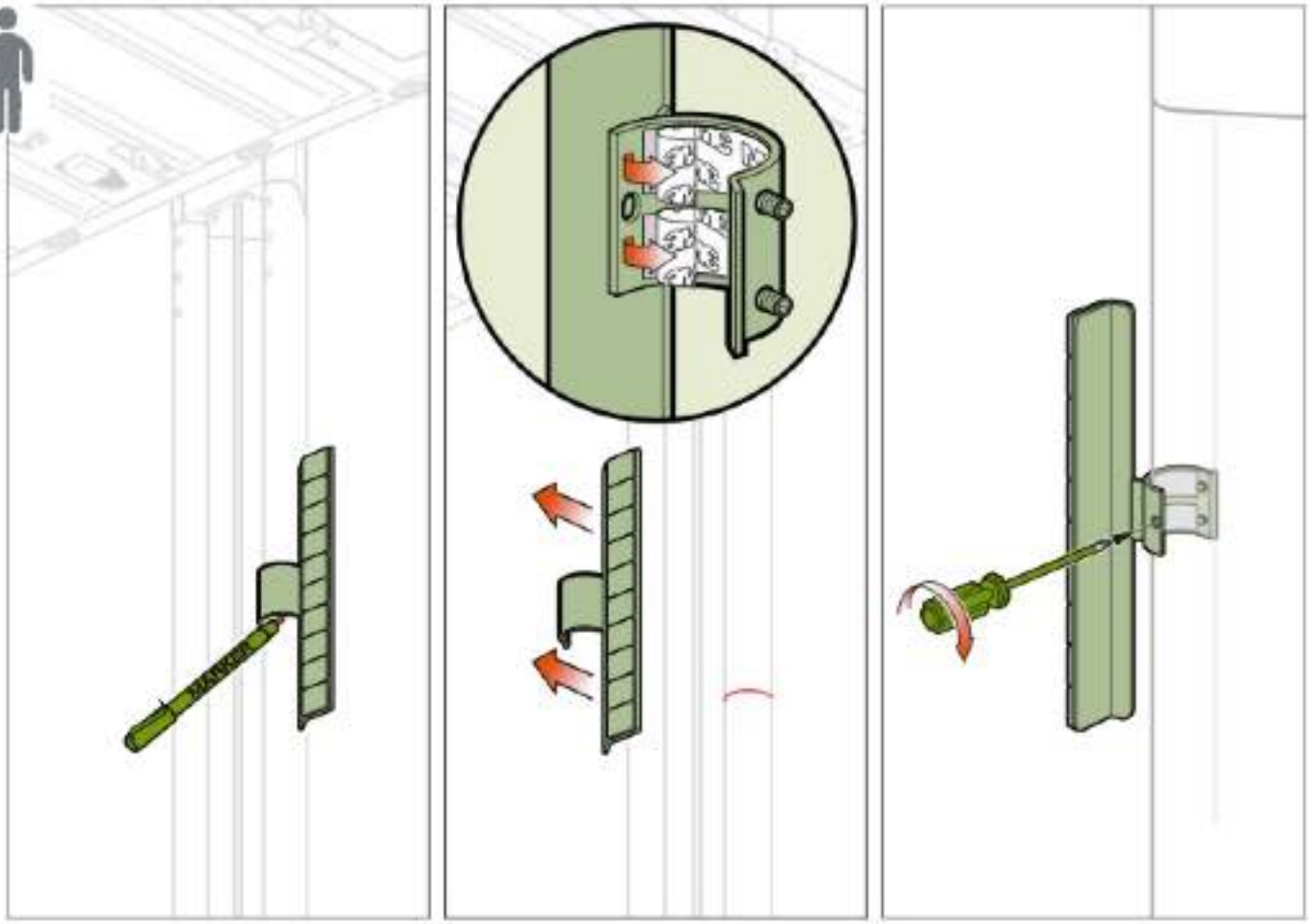

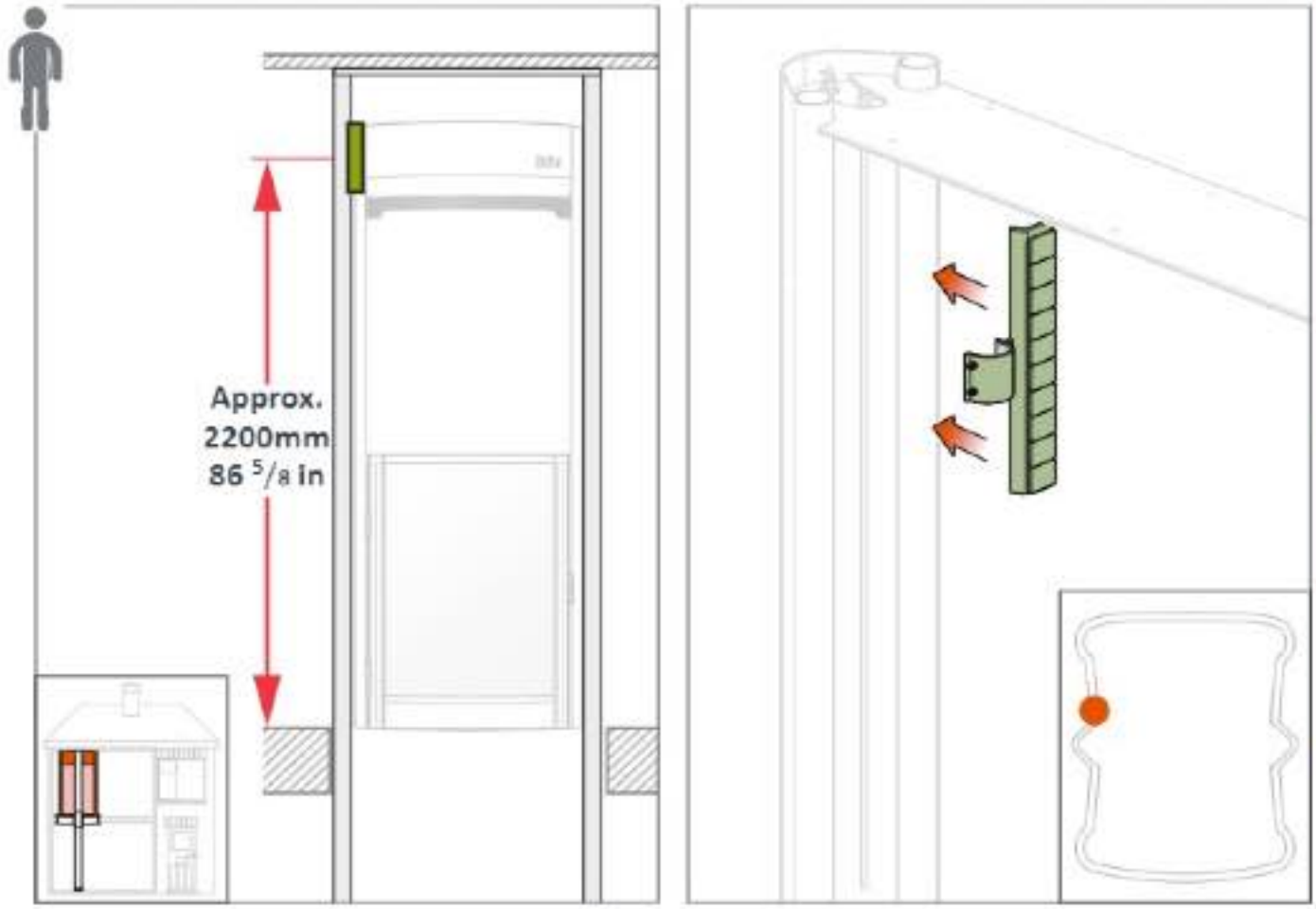
Approx.
2200mm
86 5/8 in

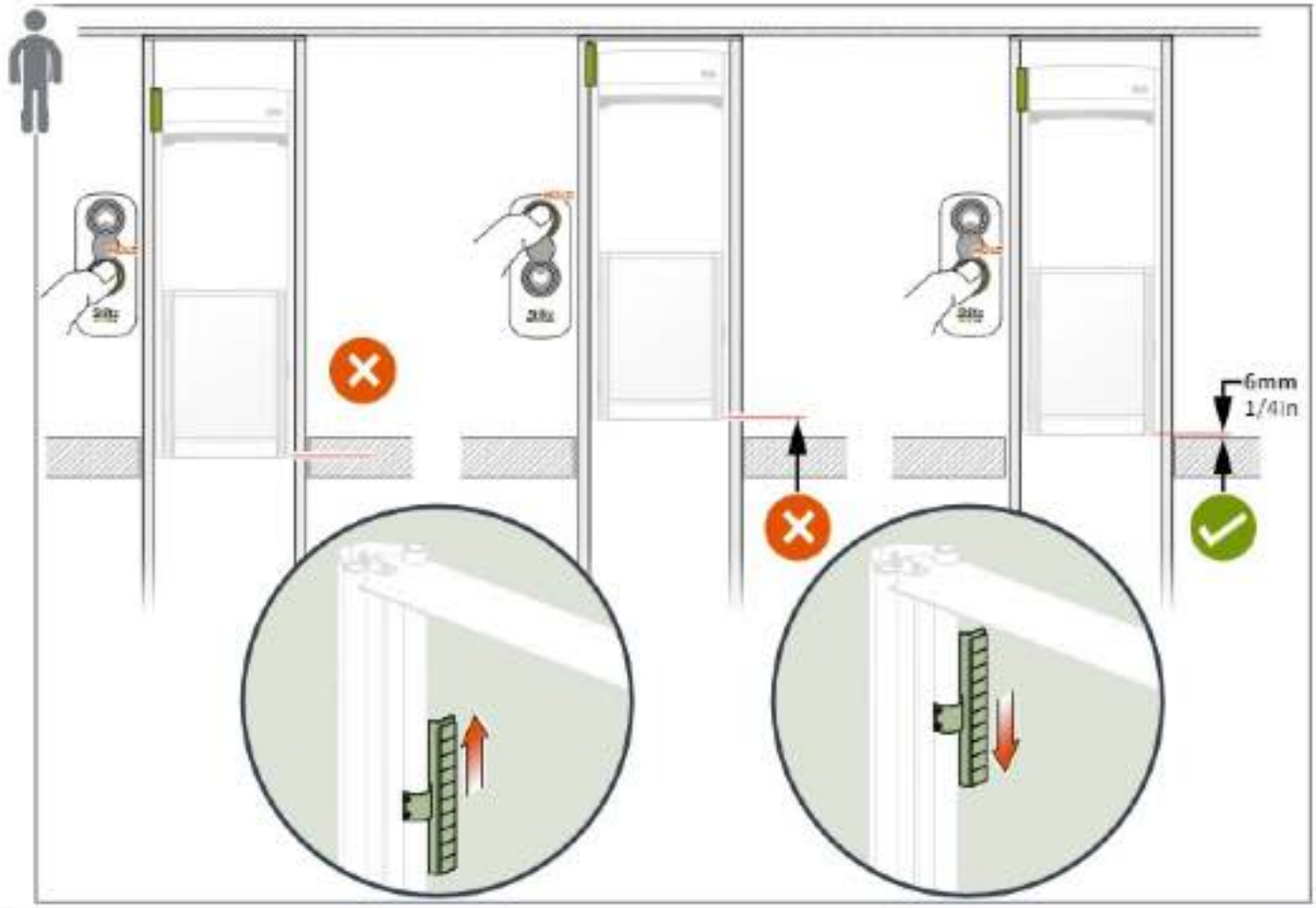
6mm
1/4in

Section 7: Finishing Up Electrical/Mechanical

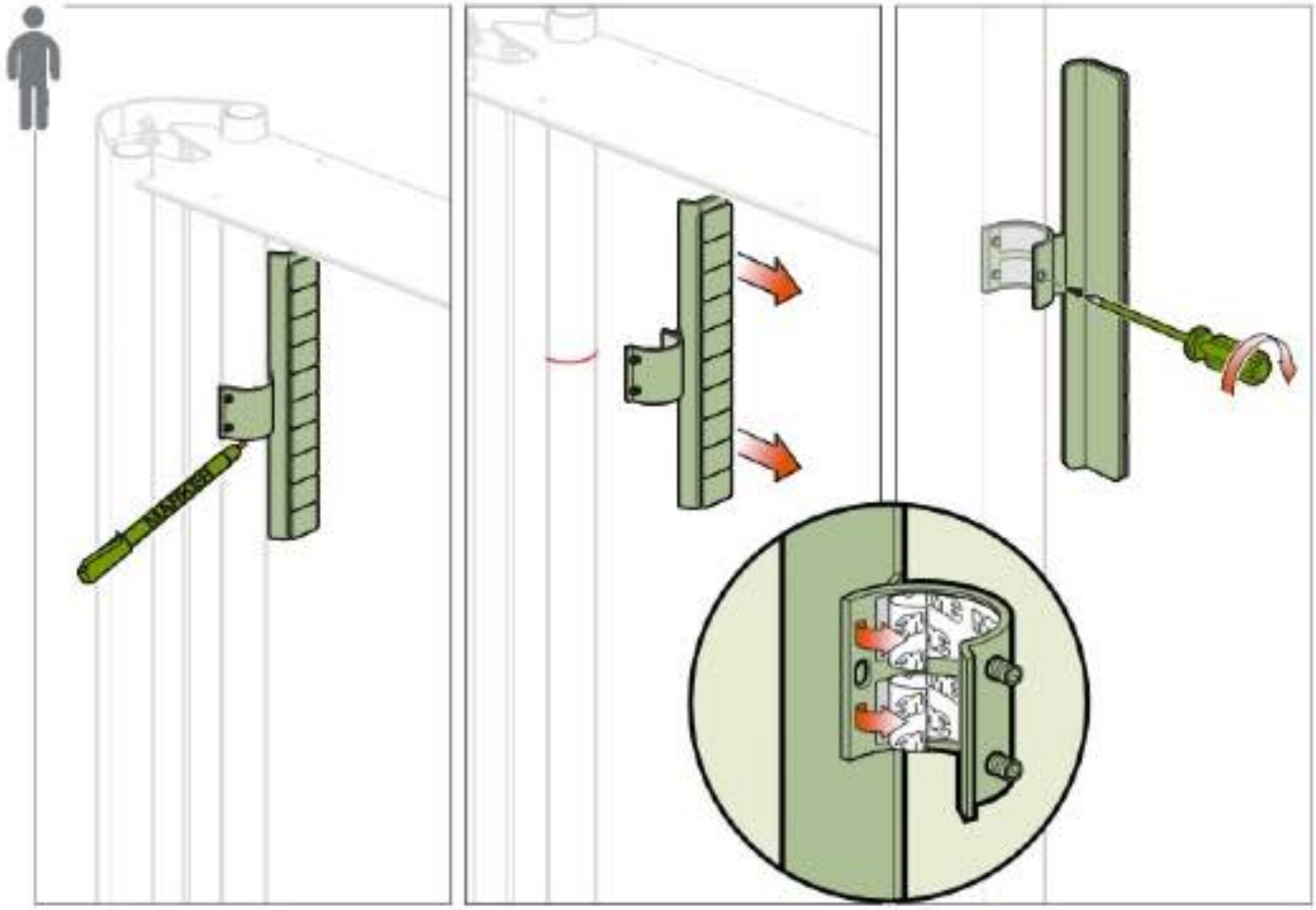

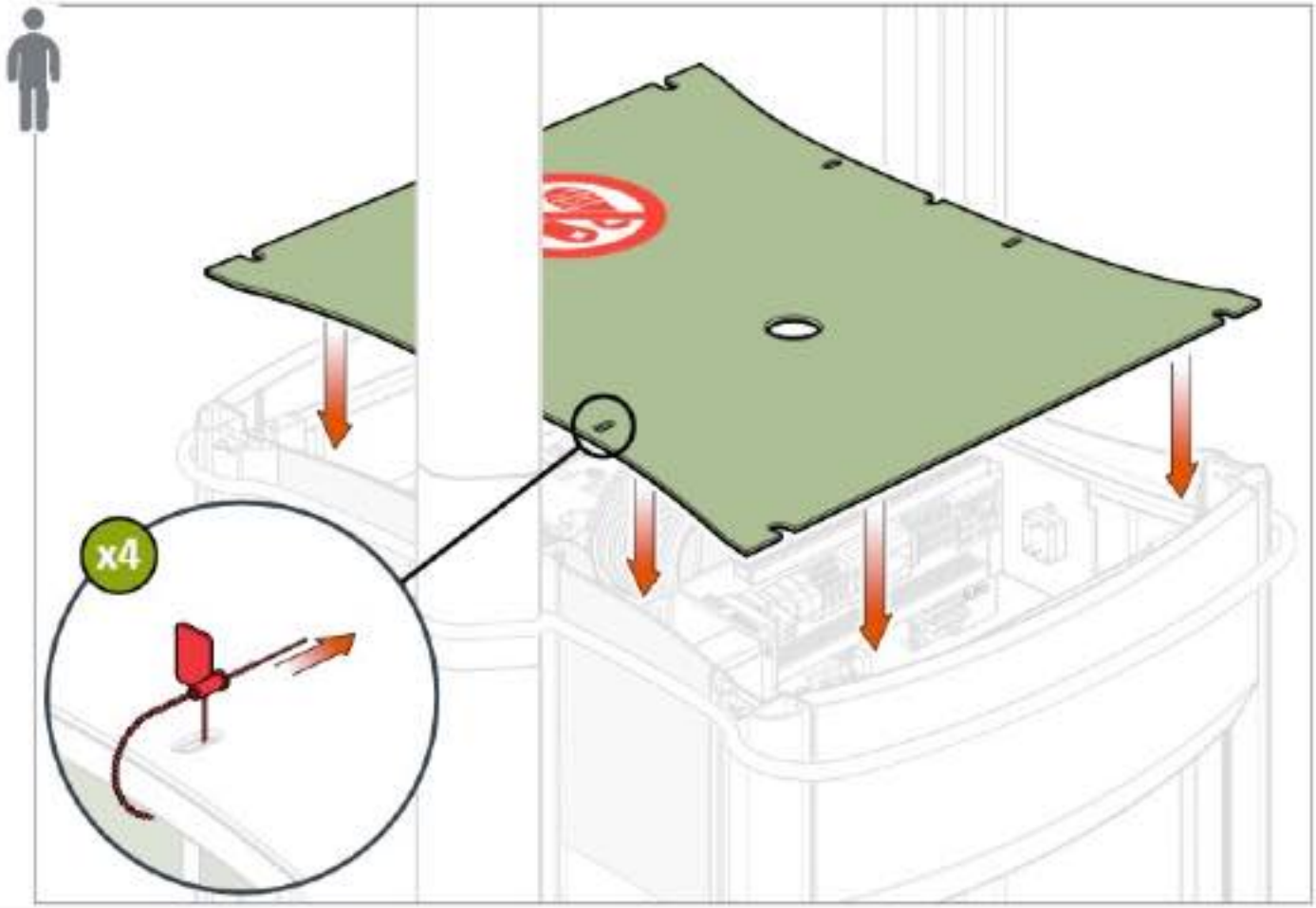

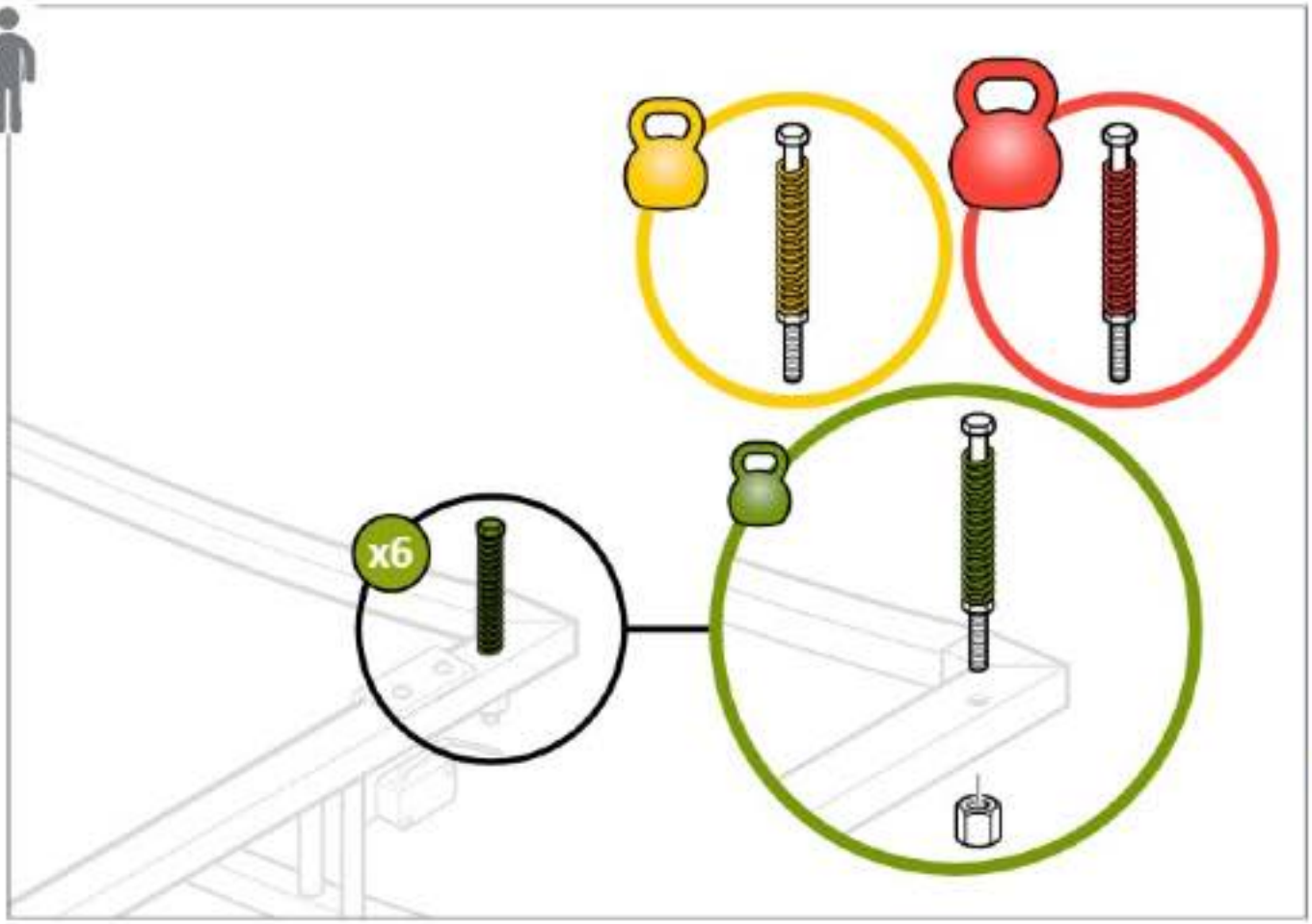
x6

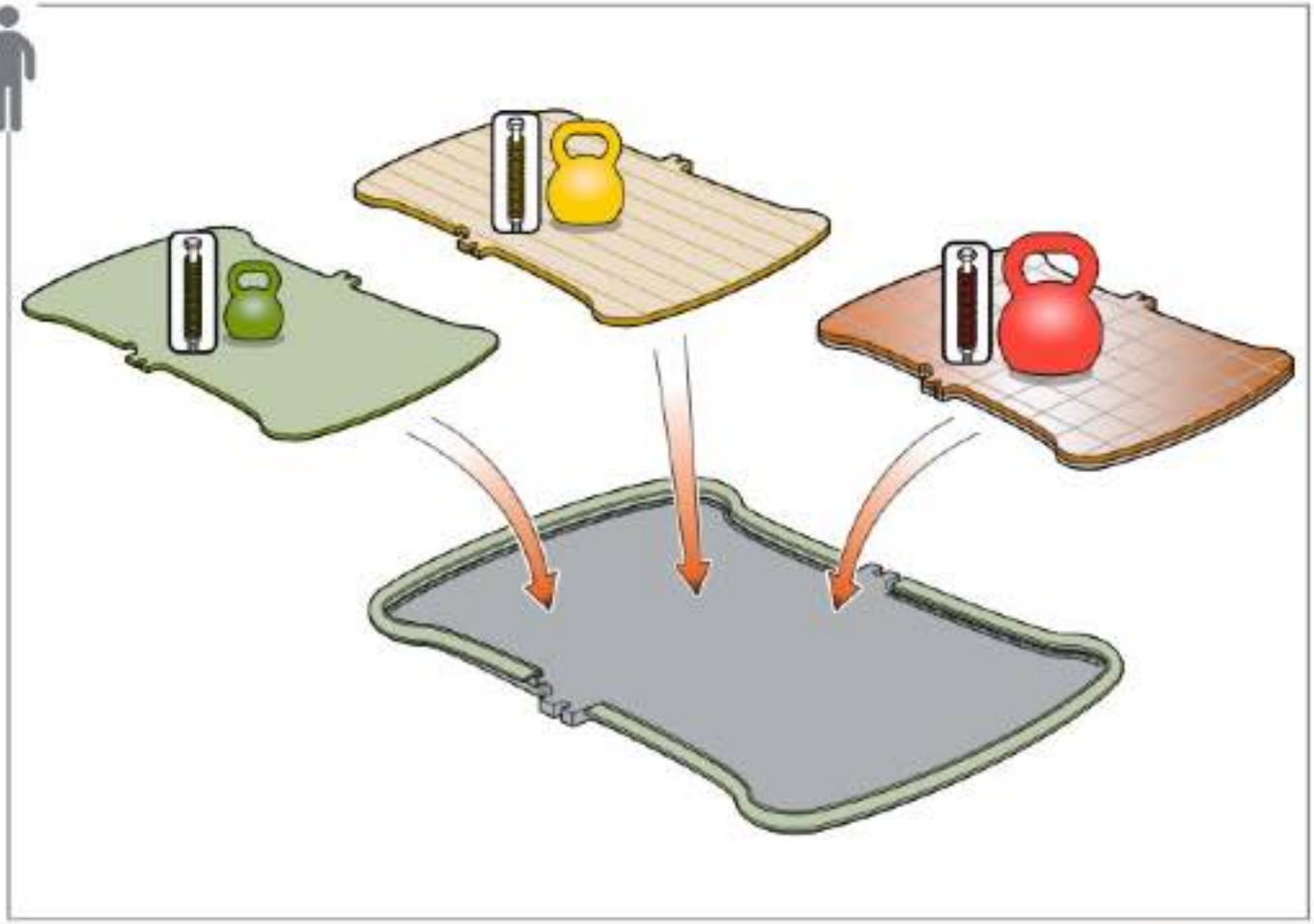

Section 7: Finishing Up Electrical/Mechanical

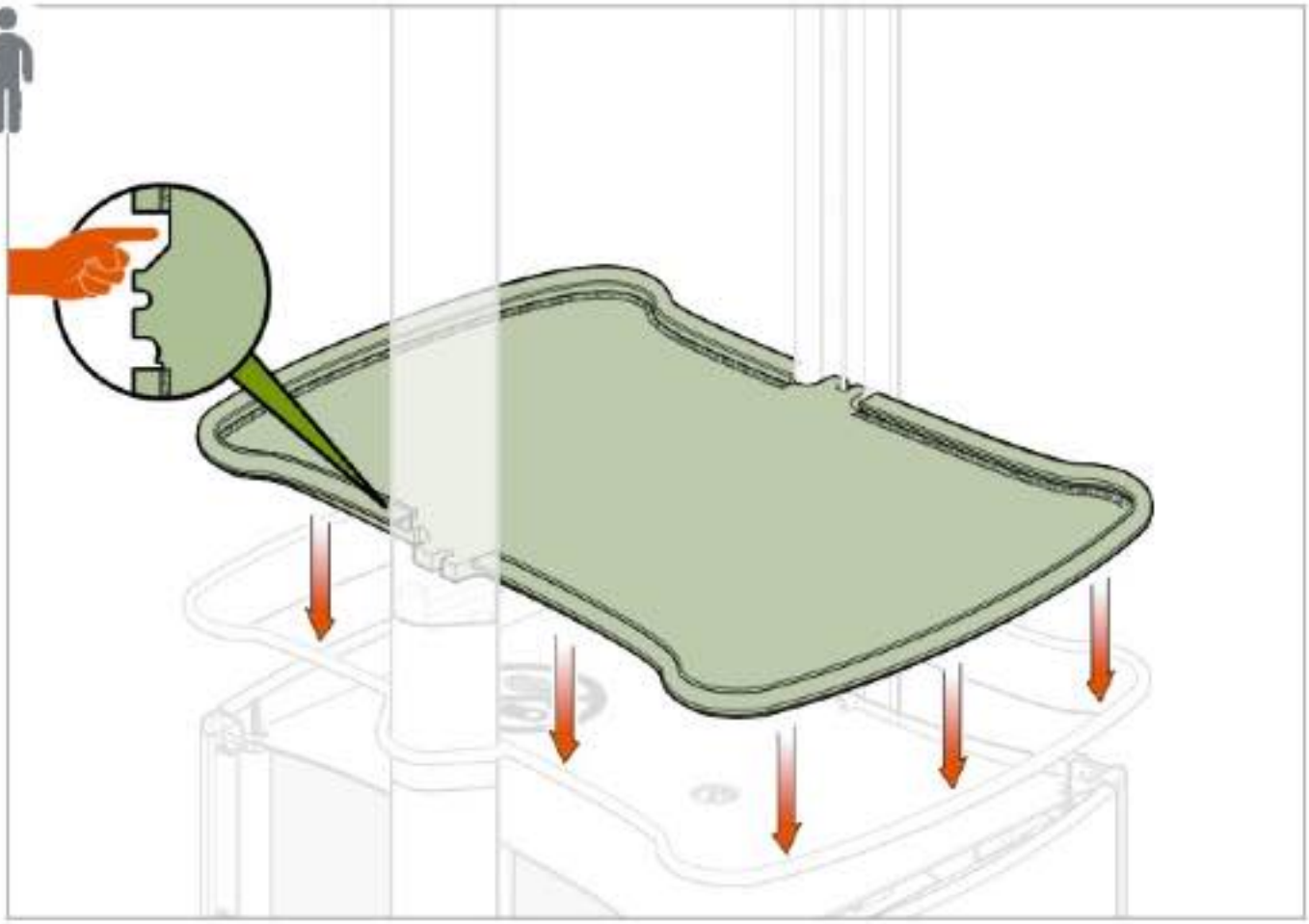

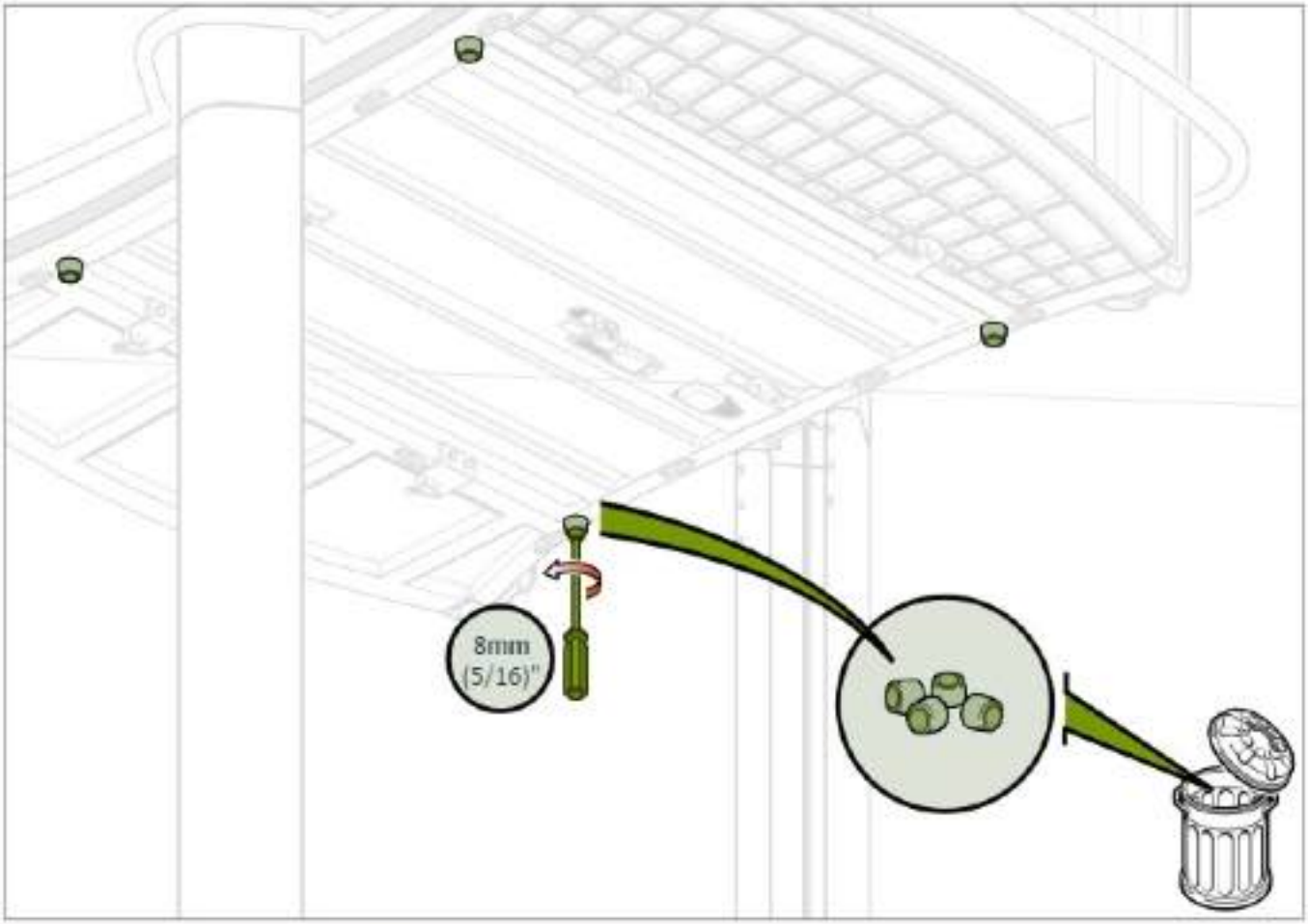

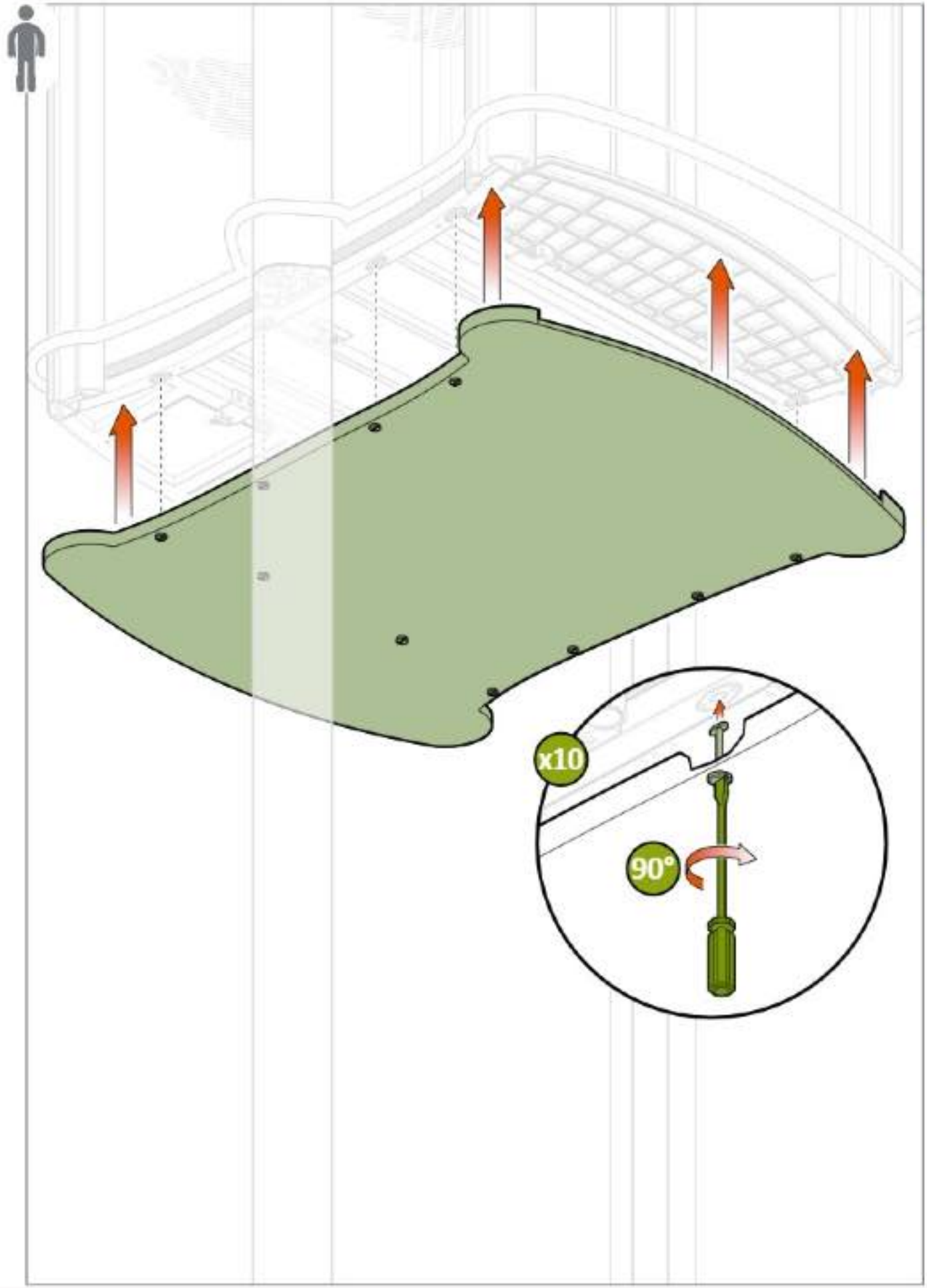
x10
90°

Section 7: Finishing Up Electrical/Mechanical

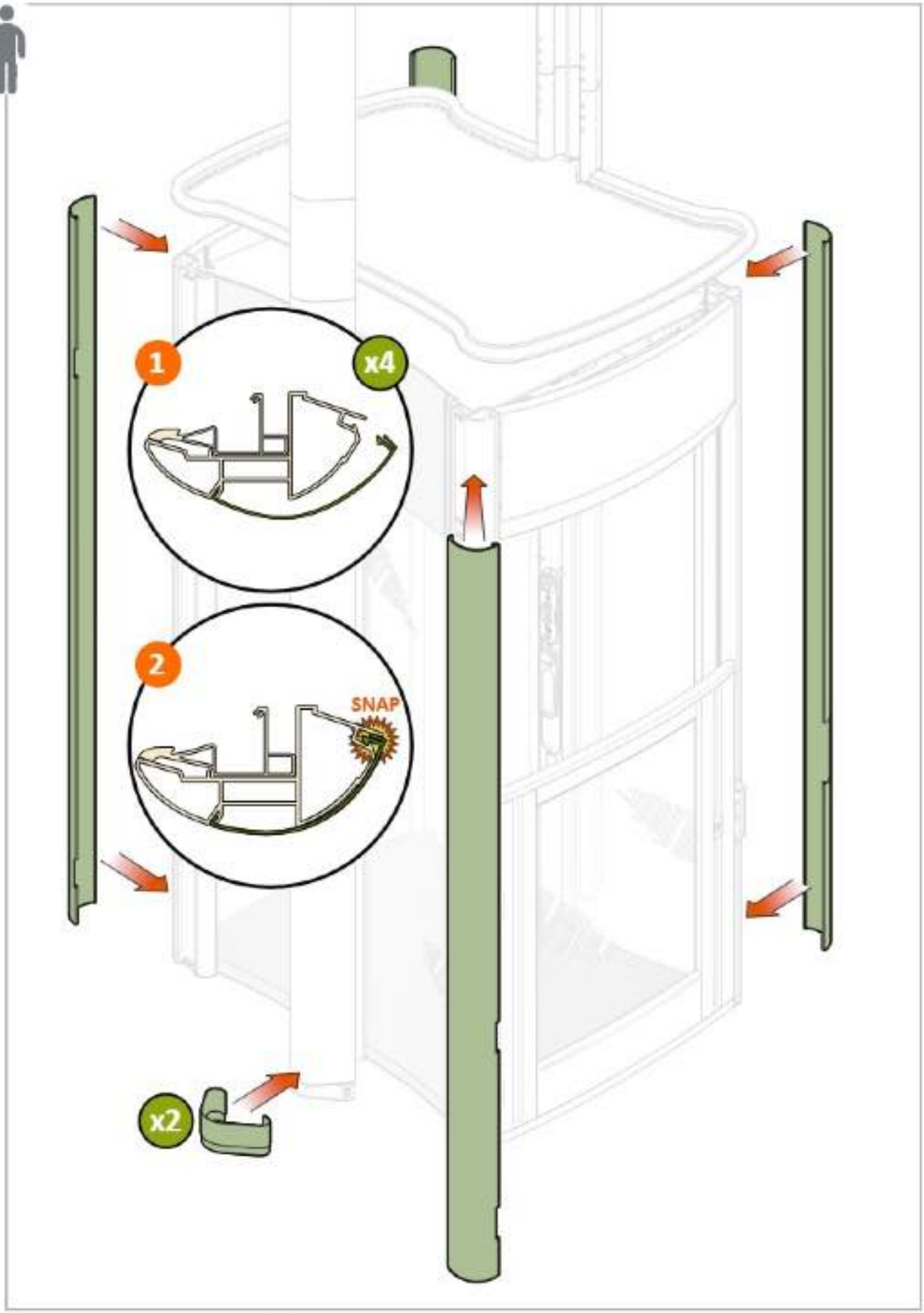

Installation Guidelines

Committed to providing stylish
and accessible living for all

Tel: **+44 (0)1384 319 646** www.stiltz.co.uk

Tel: **+1 484 282 0002** www.stiltzlifts.com

Tel: **+86 400 635 0886** www.stiltzlift.com.cn

+86 177 1516 2367

Stiltz Homelifts