PRINT MAY BE REDUCED - DO NOT SCALE.

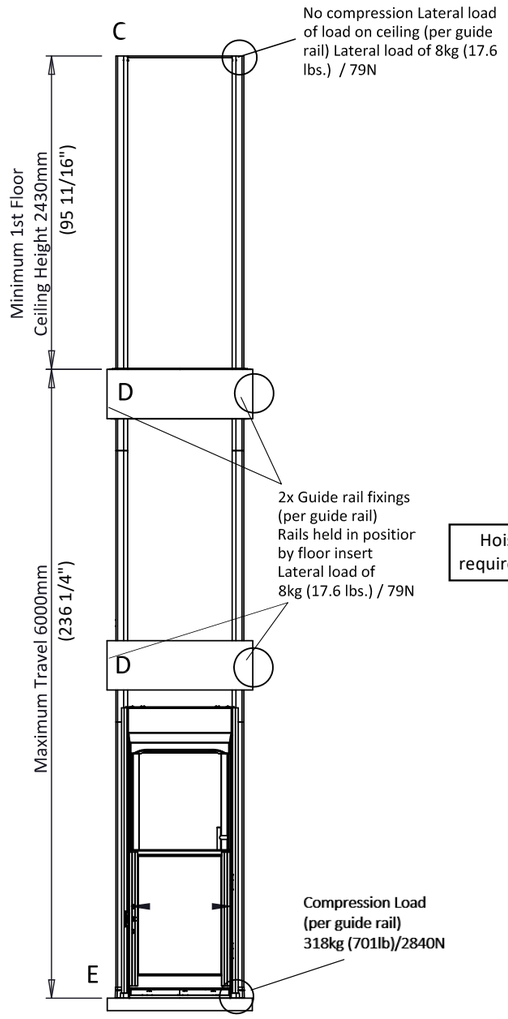

Front Elevation View

Hoistway enclosure required at the mid-level

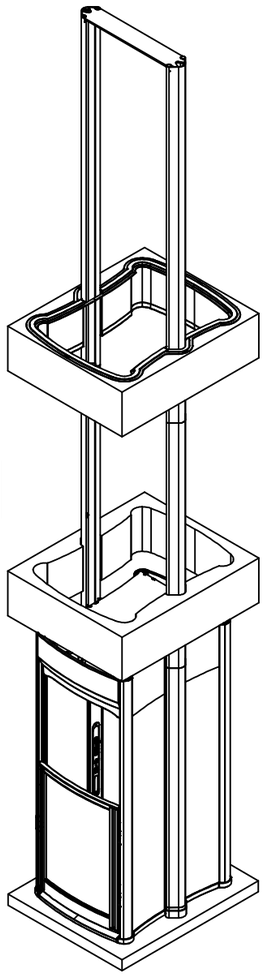

GENERAL DATA

Type:	TRIO Homelift
Capacity:	500 lbs.
Speed:	21.7 ft/min
Maximum travel:	19.75
Car floor area:	11.1 sq ft
Landings:	3
Car entrances:	1 in-line, 2 thru
Operation:	Constant pressure

LIFT WEIGHT

Hoist unit (machine room above car):	237.6 lbs.
Car body:	202.4 lbs.
Total empty lift:	440.0 lbs.

SUSPENSION ROPES

Manufacturer:	Pfeifer Drako
Type:	Drako 7 x 19 WSC (Mil Spec 83420)
Dimensions:	0.2362 in (6mm)
Min. breaking force:	29,0 kN

GUIDE RAILS

Manufacturer:	Stiltz
Type:	Specific Aluminium Alloy (AA 6063) extrusion
Size:	Overall depth 7.165 in, width 3.756 in

CAR

Type:	Centrally guided, 1 or 2 entrances
Suspension:	2 ropes, drum
Walls:	Sides have full walls.
Door:	Manual operation swing full height doors.
Floor surface:	In accordance with clause 5.3.1.11
Apron minimum vertical height:	2.362 in
Handrail:	Included as standard

APPLIED COMPONENTS

Safety gear; manufacturer; type:	Stiltz, mechanial gripper plates and rods
Car door lock; manufacturer; type:	Stiltz (Kunshan) Limited, ES 20M
UL certificate:	102448987CRT-001

MACHINE EQUIPMENT

Manufacturer:	Nord Gear Ltd
Type:	SK9016.1 VL-80S/4 BRE10 HL SR OL/H (Bevel gear unit)
Motor Power:	0.55 kW
Output Speed:	1375 / 15 rpm
Reduction:	02:37.0
Output Torque:	339 Nm
Brake torque; manufacturer:	10 Nm; Precima
Drum; manufacturer:	Shanghai Hanzhou Machinery and Equipment Co., Ltd
Material:	Cast Iron
Diameter:	7.874 in (200mm)
Diverter pulley; manufacturer:	YangZhou Saierda Nylon manufacture Co. Ltd.
Material:	Nylon
Quantity:	2

ELECTRICAL

Main power:	220-1-60 HZ - 20 AMP
Signal voltage:	24 VDC
Emergency lowering system:	Battery 12 V - 12 AMP, with emergency lighting
PLC; manufacturer:	Mitsubishi
Type:	AL2-24MR-D
VFD; manufacturer:	Nord
Type:	SK 500E - 750 - 323 - A

SIGNAL/SAFETY FEATURES

Landing controls:	Remote transmitters hold-to-run buttons, with back lights
Car controls:	Hold-to-run call buttons, with back lights
On/off and reset switch:	Keyed on car operating panel
Emergency stop:	Push emergency stop switch with alarm siren
Emergency signalling device:	Two way voice communication telephone, to landline
Car indicator lights:	Over-speed, over-load, out-of-balance, bottom-top obstruction
Car Lighting:	LED strip lighting in ceiling and LED puck lighting cab floor
Top of car/machine room:	Load sensitive top plate above lift
Bottom of car:	Obstruction sensor pad at base of lift car

Car door contact; manufacturer;	Kronenberg, PZ 73
UL certificate:	20141104-SA34041
Machine brake; manufacturer;	Precima
UL certificate:	1478630

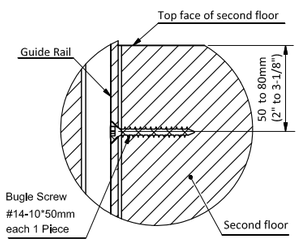

DETAIL D

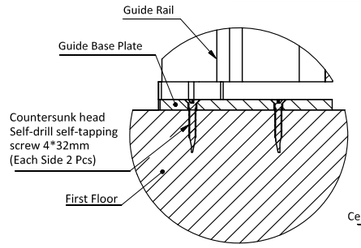

DETAIL E

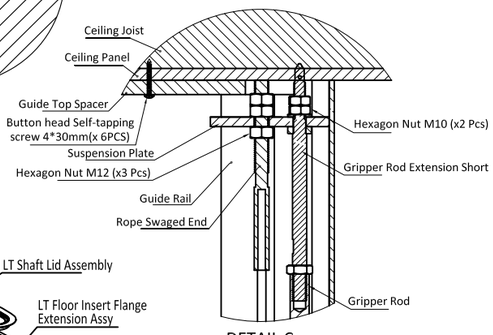

DETAIL C

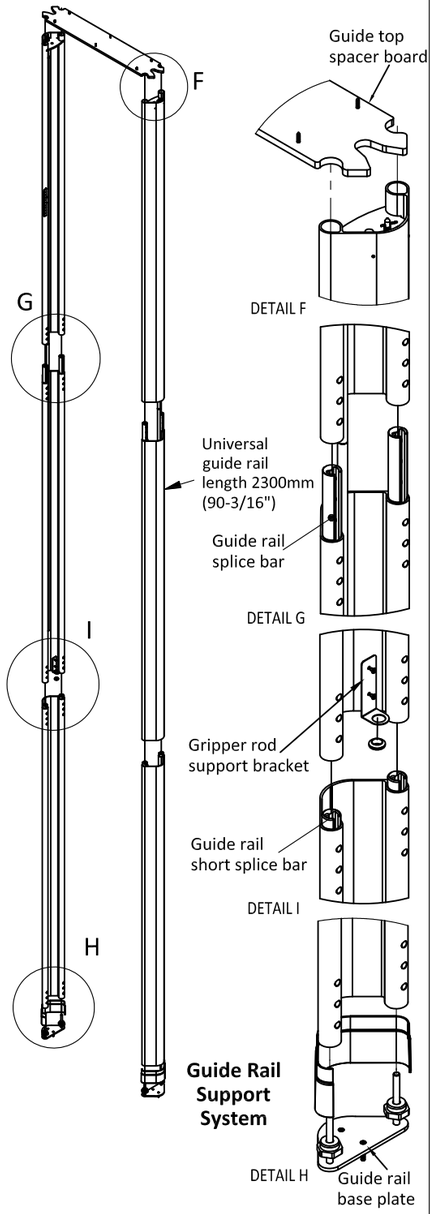

Guide Rail Support System

FLOOR CUT-OUT VIEW

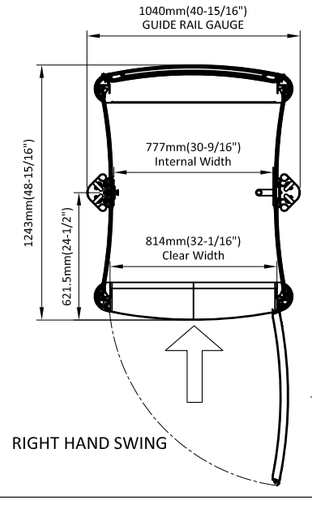

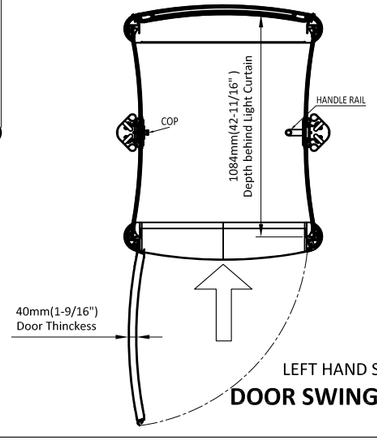

DOOR SWING LAYOUT

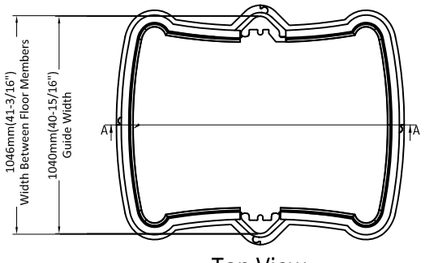

Top View

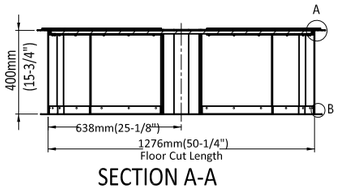

SECTION A-A

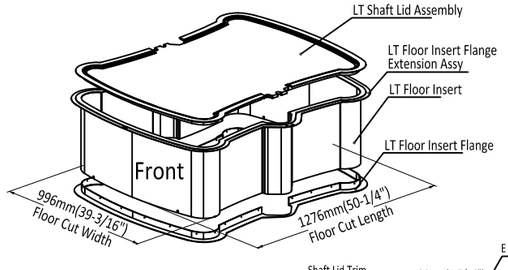

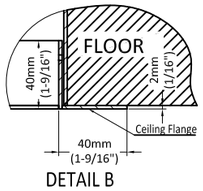

DETAIL B

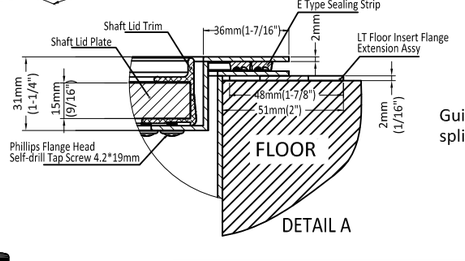

DETAIL A

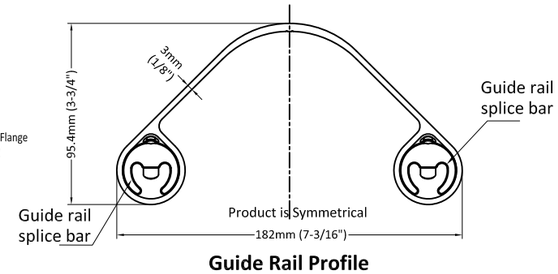

Guide Rail Profile

Trio Alta

The information contained herein is the exclusive property of Stiltz Ltd. and shall not be distributed, reproduced, or disclosed in whole or in part without prior written permission of Stiltz Ltd.

Stiltz

© Stiltz Ltd. 2021

Drawn Guangji Chen | Date

DIMENSIONS IN MM UNLESS OTHERWISE NOTED

THIRD ANGLE PROJECTION - AS 1100

TITLE: Trio Alta ASME Installation Layout

A3 | Dwg No | SCALE: | PAGE 1 OF 1