INSTALLER: Deliver this booklet to the Home Owner!

Versa Lift™

Attic Storage Lifting System

Protected By
US Patent 8,418,814
US Patent 8,851,238
US Patent 8,702,069

INSTALLATION GUIDE

All Models 24

CONTENTS Page

Safety Facts 2
Overview 3
Electrical 4
Lift Opening Specs 4-5
Framing Techniques 6-9
Carton Contents. 10
Assembly and Installation 11-18

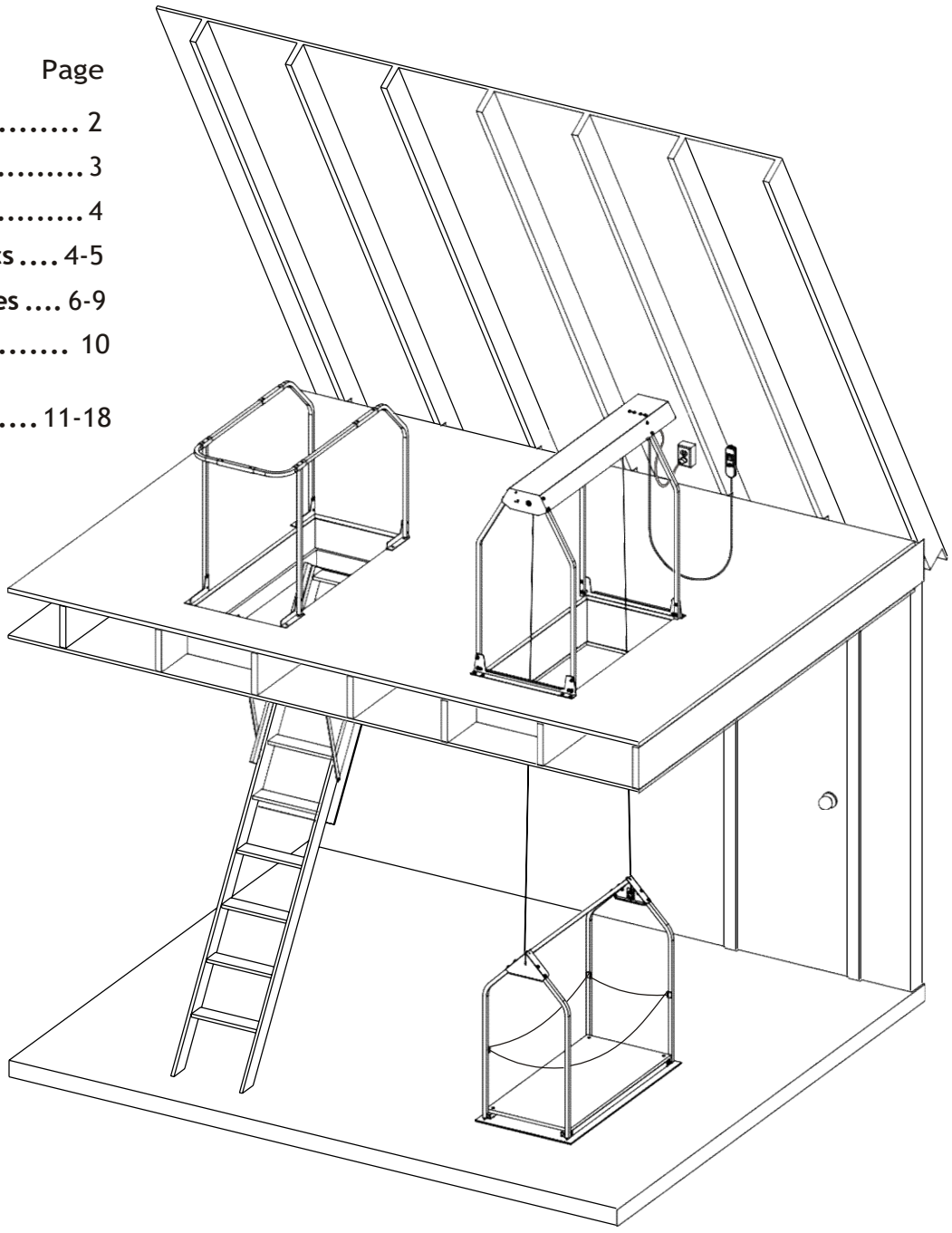

Sold by:
Cynergy corporation
www.versaliftsystems.com
405-516-2412

IMPORTANT! PLEASE READ YOUR OWNERS MANUAL!
The manual includes essential safety and maintenance information. Read manual before operating the Versa Lift!

Copyright © 2006 - 2019 BPG
All rights reserved.
Revised March 2019

READ THIS BEFORE INSTALLING THE VERSA LIFT

SAFETY GUIDELINES - DEFINITIONS:

It is important to read and understand this manual. The information it contains relates to protecting *your safety* and *preventing problems*. The symbols below are used to help you recognize safety information.

DANGER Indicates an imminently hazardous situation which, if not avoided, will result in death or serious injury.

WARNING Indicates a potentially hazardous situation which, if not avoided, will result in death or serious injury.

CAUTION Indicates a potentially hazardous situation which, if not avoided, will result in minor or moderate injury.

DANGER NEVER ALLOW PERSONS ON OR IN THE LIFT! NEVER SIT OR STAND ON THE LIFTING PLATFORM! ABSOLUTELY NO RIDERS! No person under 18 years of age should be allowed to operate this product. Children should be kept away from the lift when it is in operation. When not in use, lock the remote control and remove the key and store it where children cannot get it! This product can cause serious injury or death to a child who attempts to ride the lift or to lift others! When not in use, ALWAYS raise the lifting platform to the highest position and unplug the power cord to lift, lock the remote and store the key!

WARNING WHEN WORKING IN THE ATTIC, STAY ON DECKED AREAS. If you must enter non-decked areas, stay on joists. The materials between the joists will not support your weight and will collapse if you stand or sit on them. Be alert to overhead hazards, such as exposed nails. Be aware of and avoid openings, such as the ladder opening or the lift opening when you are working or moving around in the attic.

WARNING When working with power tools, follow all of the manufacturers safety guidelines and wear approved safety glasses and hearing protection.

WARNING DO NOT WORK ALONE IN A HOT ATTIC or if you have any health condition that could affect your balance, your mobility, or cause you to loose consciousness. If you have any diminished capacity, always work with another person in case you should need help. Don't work in the attic in the heat of the day. You can quickly be overcome by heat exhaustion in a hot attic in just a matter of minutes. Morning hours are the coolest time to work in the attic.

WARNING DO NOT OPERATE THIS EQUIPMENT IN DAMP, WET OR POORLY LIGHTED LOCATIONS or attic spaces and don't expose it to rain. Do not use this equipment in the presence of flammable gases or liquids. Keep the work area clear of obstacles, cluttered areas invite injuries. Use only correctly grounded power outlets or extension cords. Never operate equipment without grounding!

NOTICE TO INSTALLER:

DO NOT OPERATE THE MOTOR UNTIL YOU ARE INSTRUCTED TO IN STEP 9 OF THIS GUIDE!

Doing so will cause the Versa Lift to malfunction and require re-calibration by factory or authorized dealer.

DANGER TO REDUCE THE RISK OF ACCIDENTS, SEVERE INJURY, OR DEATH, ALL OPERATORS MUST READ AND UNDERSTAND THE OWNERS MANUAL COMPLETELY BEFORE OPERATING THIS EQUIPMENT!

WARNING FALLING HAZARD: The ladder opening and lift opening present falling hazards to any person who enters the attic. When you are in the attic space, be alert at all times to these openings. *We highly recommend you install a safety railing around your ladder opening, such as the Versa Rail by BPG* (see Fig. 0).*

WARNING If you install this lift product inside the living space of a home, or in a closet, or a walk-in attic accessible to children, then you must also install the Auto-Shutter* from BPG that automatically closes the lift opening as the platform goes down to help prevent children, pets, etc. from falling through the opening (the Auto-Shutter is not illustrated in this manual).

**For information on the Versa-Rail, Auto-Shutter, and other Versa Lift accessories visit www.versaliftsystems.com or call us at 405-516-2412.*

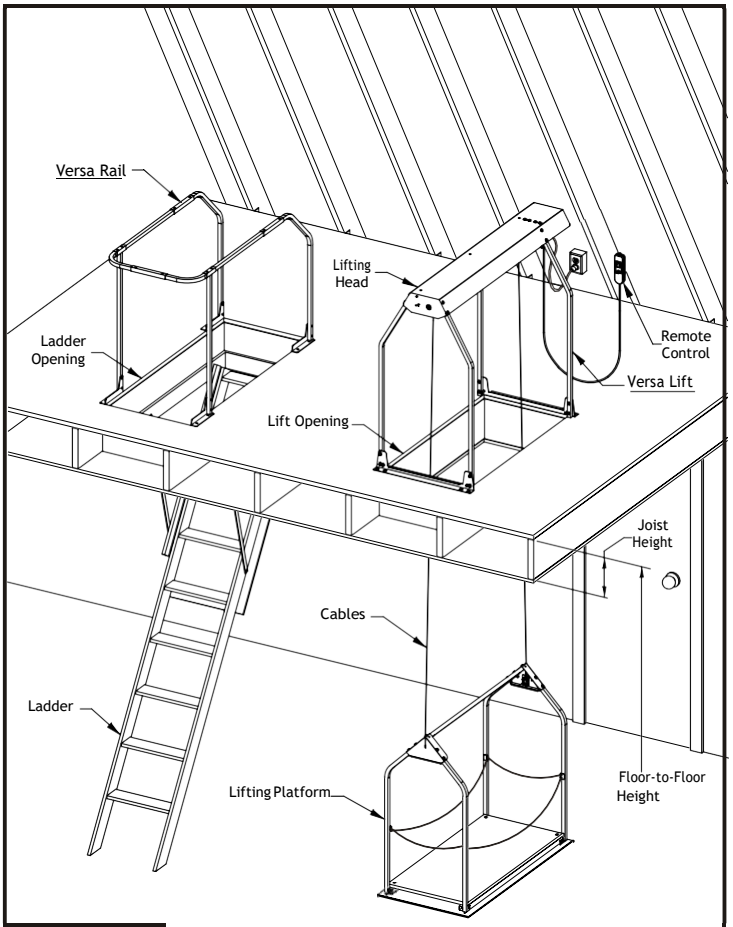

Fig. 0

BEFORE INSTALLING THIS LIFT:

Verify that this product and its installation does not violate local building codes. You can find out this information from a local building inspector, architect, structural engineer, or your building contractor.

Find out if there are any code restrictions on what types of things you can store in your attic.

Get professional advice and estimates on framing, decking and assembly if you are not qualified or physically able to do these tasks. You can find building contractors, remodeling contractors, architects, engineers and inspectors in the Yellow Pages.

You are responsible for determining the suitability of this product for your individual purposes, as well as installing it in a way that meets local building and safety codes.

⚠WARNING Two persons are required to perform certain tasks in this guide for safer and easier installation. Performing these tasks alone is not recommended.

VERSA LIFT SPECIFICATIONS:

General Specifications	(All Models 24)
Dimensions	26x57x47H
Vertical Attic Space Req'd.	48"
Min. Max. Joist Height	18"
Lift Opening Size	22.5x46.5"
Motor	0.6 hp
Voltage	120 VAC
Power	5 amps
Lift Capacity Max.	200 lbs.
Lifting Speed	8 in/sec
Duty Cycle (minutes)	2 on / 4 off
Lifting Cables (2)	.093 (7x19)
Shipping Wt. (approx)	170 lbs.

Model	Floor-to Floor
24	8-11 ft.
24H	11-14 ft.
24HX	14-17 ft.
24HXX	17-20 ft.

Control Options

Handheld Remote.....(keylock and 15-ft cord)
Wall Mounted Switch Set....(downstairs has keylock)
Wireless Remote.....(with powerful Radio Receiver)

Versa Lift
INSTALLATION OVERVIEW:

1. FRAME THE OPENING:

The first step to installing your new Versa Lift is preparing an opening in the ceiling where the lift will be located.

Tools/Materials Required: Saws, Drill-Driver, Hammer, Nails or Screws, Framing Square, Tape Measure, Header & Joist Lumber to match your existing joists.

Skill Level: ***Professional*** - Only attempt this part of the installation yourself if you are skilled in construction-type framing. If you are not, you should hire a Versa Lift dealer or a building/remodeling contractor to do this job for you. Before cutting any ceiling joist, consult a contractor or structural engineer to determine the best location to install your lift. If your attic is not already floored, you may want to get some advice on how to add flooring in your attic to create a nice storage area.

2. FLOORING AN ATTIC SPACE:

If your attic is not already floored in the area where your Versa Lift will be installed, then flooring material such as plywood must be added on top of the ceiling joists to make a floor that you can walk on and store items on.

Tools/Materials Required: Skill Saw, Hammer and Nails or Screws and Power Driver, Framing Square, Tape Measure, and Decking Material.

Skill Level: ***Handyman*** - If you have skill with general carpentry tools (sawing, measuring, nailing or screwing) and the physical strength to move large pieces of wood, then you can do this part yourself with a helper. *(*You can get 4 x 4-ft. or 2 x 8-ft. pre-cut plywood at most lumber stores. It is much easier to handle than 4 x 8-ft sheets.)

3. ASSEMBLE AND INSTALL THE LIFT:

The Versa Lift comes partially assembled. The cartons contain all of the parts and fastening hardware, along with detailed instructions in this guide for assembly.

Tools/Materials Required: A Power Drill-Driver, 5/32" Drill Bit, Phillips Driver Bit, Socket Driver Bit, Tape Measure, Square, Level, Phillips Screwdriver, 3/8" & 7/16" Wrenches, and 3/8" & 7/16" Sockets and Ratchet.

Skill Level: ***Handyman*** - If you have the skill for general repair and maintenance using hand tools and can read and follow instructions, then you can do this part yourself with a helper.

Versa Lift Opening Installation Specs

ELECTRICAL REQUIREMENTS:

ELECTRICAL OUTLET:
You will need a single 120 volt AC grounded electrical outlet to plug in the Versa Lift power cord. It is highly recommended that the outlet be on the same switched circuit as the lighting in your attic so that when the attic lights are turned off, the power to the Versa Lift is also turned off. This arrangement will be more convenient for you and will prevent unintended operation of the lift.

The power cord provided with this product has three blades. The longest blade is the grounding blade (Fig. 1a). The shorter flat blades are the current carrying blades. You will need a grounded power outlet (receptacle) as shown below (Fig. 1a). If your outlet does not have a grounded receptacle for a three blade plug or if you are unsure if your outlet is correctly grounded, have a qualified electrician check the outlet (receptacle) to make sure it meets local codes. Incorrect grounding puts you at risk of electrical shock. **Never modify the equipment plug to fit a two blade outlet (receptacle)!**

If you use an extension cord, it must be a heavy duty three-wire type with a three blade grounding plug and matching grounded outlet (receptacle) like those shown in Fig. 1a and rated for at least twice the load (10 amps minimum).

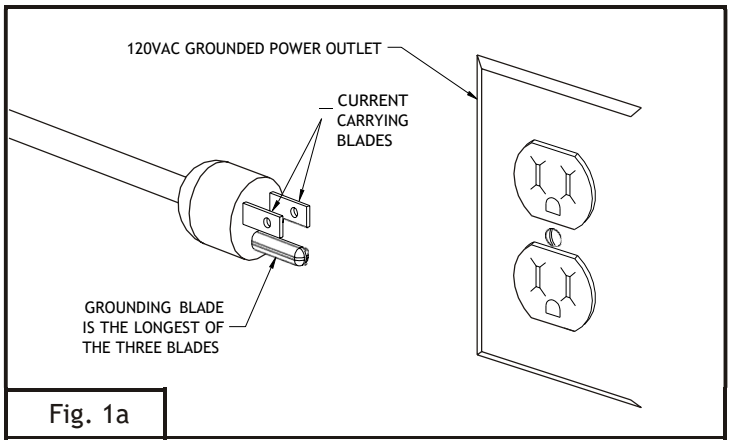

Fig. 1a

WARNING To prevent unintended lift operation, you must turn the power switch off, unplug the power cord, or disconnect the power when not in use! The wireless model radio is active if the lift has power and is turned on and can operate the lift whenever a coded signal is received from the Versa Lift remote control transmitter or from another transmitter in your area. Unintended operation can cause the lifting platform to move unexpectedly, possibly causing injury to persons or damage to property located directly under the lift.

LIFT OPENING SPECIFICATIONS:

VERTICAL ATTIC SPACE:
The Versa Lift requires a minimum of 47" of vertical space directly over the lift opening (Fig. 1b).

OPENING DIMENSION & TOLERANCES:
The final opening size is 22½" x 46½" with a tolerance of +1/4" and -0" (the opening can be up to 1/4" larger, but no smaller.) The lift opening must be square as shown below (Fig. 1c). Diagonal A should equal B within 1/2".

LIFT OPENING FINISH:
The lift opening must have smooth, perpendicular side walls. **No nail heads, brackets, sheet rock or decking can protrude or extend into the opening,** as this will cause the lifting platform to become caught on those edges and the lift will malfunction. (See Figs. 2a, 2b & 3).

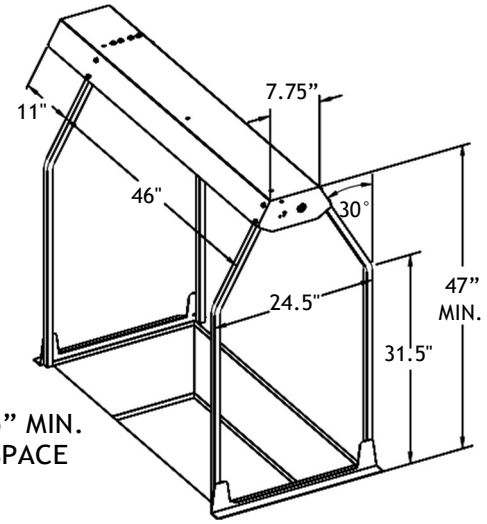

Fig. 1b

LIFT OPENING MUST BE SQUARE (A = B ± 1/2")

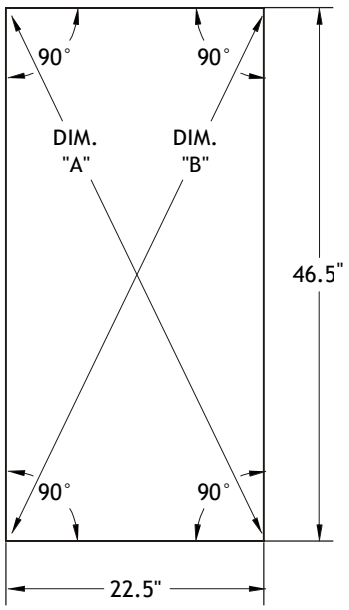

Fig. 1c

LIFT OPENING SPECIFICATIONS (Cont):

OPENINGS IN SOLID WOOD JOISTS:

For solid wood joists, the final opening size must be **22½" x 46½".** All side walls must be smooth and perpendicular (the opening can't be smaller at the bottom). Cut sheet rock and decking flush with the walls. **Nothing can protrude inside the opening:** Nail heads must be set flush or below the surface. Install the 2"x2" L-flashing in the corners of the opening to cover hanger brackets and nail heads (see Fig. 2a).

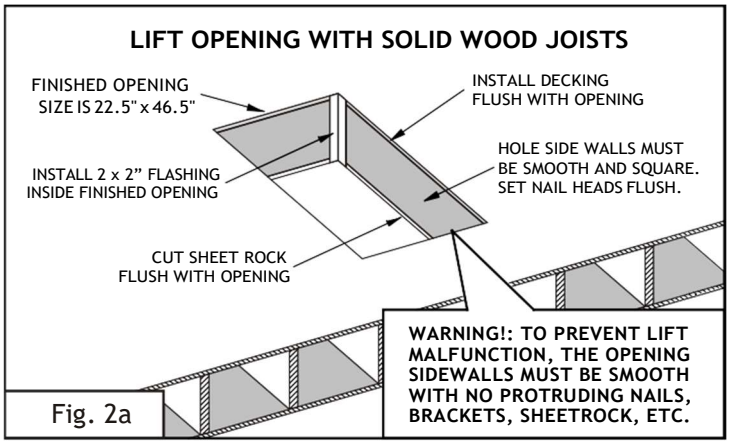

Fig. 2a

OPENINGS IN FABRICATED I-JOISTS:

For "I-Joists" make a rough opening of **23 x 47"** and panel all four sides with 1/4" thick plywood (Fig.2b). The final opening size with paneling will be **22½"x 46½"**. The panels provide the required smooth walls and cover I-joist ledges. The side walls must be square (perpendicular) and all nail heads must be set flush or below the surface. Cut all sheet rock and decking flush with the edges of the opening. Install the 2"x2" L-flashing (provided) in the corners of the opening to cover hanger brackets & nail heads (Fig. 2b). For more information on framing for I-joists, see pgs. 8 and 9.

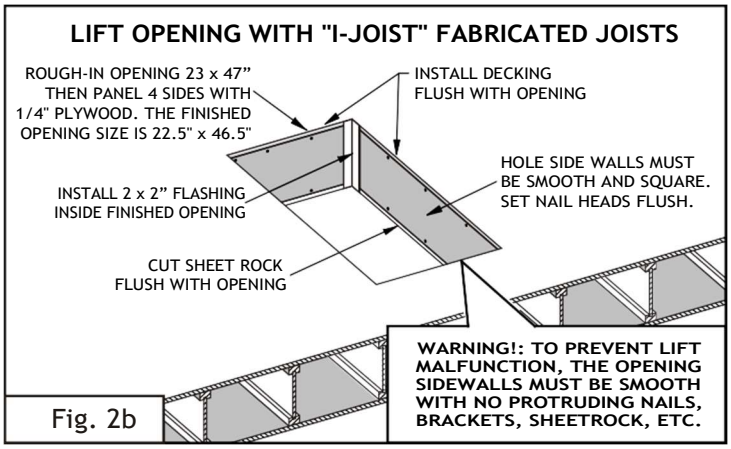

Fig. 2b

WARNING THE VERSA LIFT OPENING MUST HAVE SMOOTH PERPENDICULAR SIDE WALLS: Nail heads, hanger brackets, sheet rock or decking must NOT protrude or extend into the opening, as this can cause the lifting platform to hang up and malfunction, resulting in possible damage or personal injury! Product warranty is void if the opening does not meet the exact requirements detailed in these pages.

INSTALL FLASHING IN ALL OPENINGS: Install the 2 x 2" L-flashing the corners of all openings, even in I-Joist openings that are paneled with 1/4" plywood. Cut the flashing to the finished opening height (including sheet rock and decking). Align it to the bottom and nail both edges with #17 x 1" nails, placing nails within 1/4" from each edge (Fig. 3). The flashing strips cover nail heads and brackets while providing a slippery surface in the opening to reduce paint wear on the lifting frame.

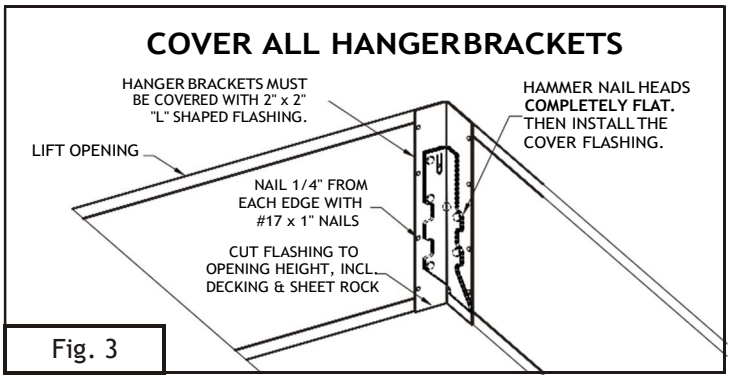

Fig. 3

PILOT HOLES FOR MOUNTING THE LIFT: Mark the location of the mounting holes on the floor deck at either end of the lift opening. These will be pilot holes for the lag screws provided to secure the lift to the attic floor.

Find and mark the center on each side of the rectangular opening, then use a straight edge or square to draw a center line (Fig. 4). Next draw a line parallel to each of the narrow ends and spaced 3/4" away from the opening. Measure along the parallel lines 10" each way from the center line and mark 4 hole centers (Fig. 4). Then measure 2" over from the first 4 marks and mark 4 more hole centers (Fig 4). Find the "Mounting Rails" in the Versa Lift carton and place them over the hole centers you have marked to check your work. The hole centers should match the four slotted holes on the Mounting Rails. If so, drill 8 pilot holes with a 5/32" bit on the hole centers you have marked (Fig. 4). Approximate depth of the pilot holes is 2-1/2".

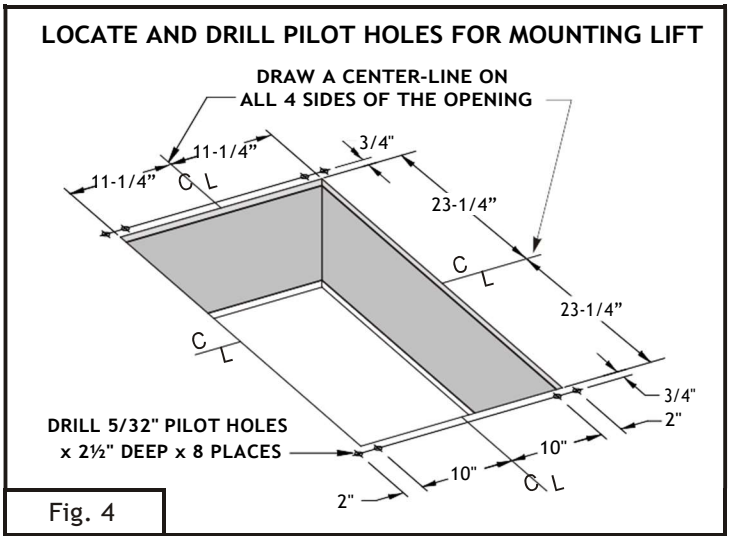

Fig. 4

Versa Lift Opening Framing Techniques

LIFT OPENING ORIENTATION - Aligned or Transverse
In general, transverse openings should be avoided because more joists will have to be cut, which will weaken the ceiling more than an aligned opening.
An **aligned opening** with joists 24" OC can be framed without the need to cut a ceiling joist (Fig. 5), while an aligned opening with joists 16" OC requires one joist to be cut (Fig.6).
An **transverse opening** with joists 16" or 24" OC will require more joists to be cut (Fig. 7 & Fig. 8). You should consult a professional to evaluate the strength of your ceiling construction and to determine if transverse mounting is advisable and to determine if you will need to double the adjacent joists to compensate for the joist(s) you cut (see Figs. 7 & 8).

Note: Joist hangers can be used instead of blocking, but joist hangers must be covered with 2 x 2" "L" flashing (provided) to prevent the lift platform from hanging in the opening, causing lift malfunction or damage (see Fig. 2a, 2b, & 3 for details about "L" flashing).

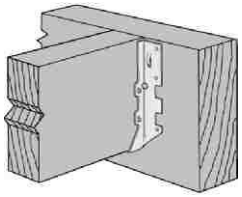

Joist Hanger for Solid Wood Joist

NOTICE ABOUT FRAMING TECHNIQUES:
The optional framing illustrations & techniques (pages 6-9) are provided for illustration only and are not intended as specific directions for you to follow in your individual installation. Use them to help you plan your installation and consult with a professional engineer, architect, or contractor about local codes and building practices. BPG does not warrant this product to be suitable for your intended purpose, location, structure, installation or use. Each installer is responsible for choosing the appropriate location, method of installation and determining suitability of this product.

Optional Framing Technique #1 - For homes with SOLID WOOD JOISTS 24" OC: Choose the location. If your attic is already decked, you will need to remove enough decking to expose the joists in the area of the opening. If your attic is not already decked, then nail down some plywood on either side for a temporary work surface.
An **aligned opening** can be framed without the need to cut a ceiling joist, just install blocking and headers shown in (Fig. 5).
A **transverse opening** will require you install temporary supports (Fig. 7&9), then mark and cut one joist before installing blocking and headers as shown in Fig. 7.

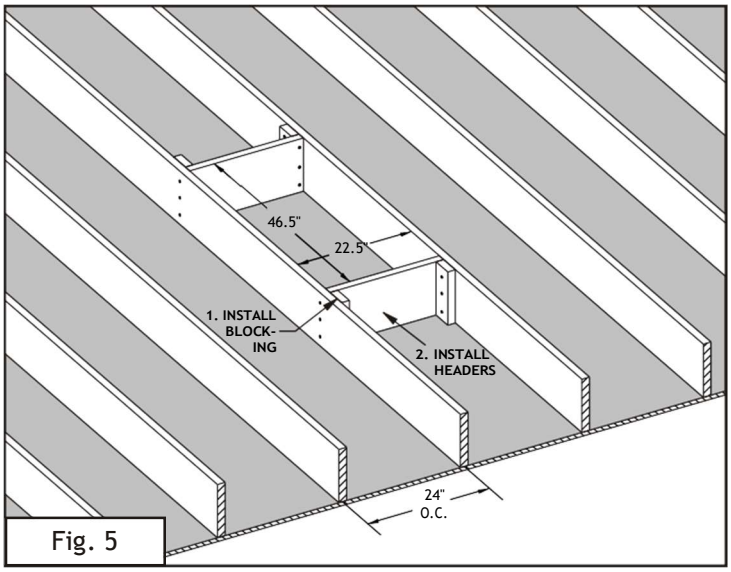

Fig. 5

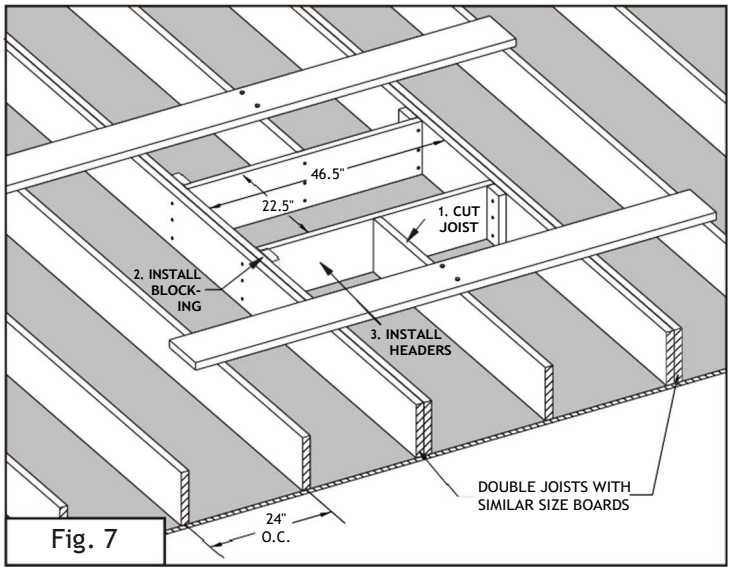

Fig. 7

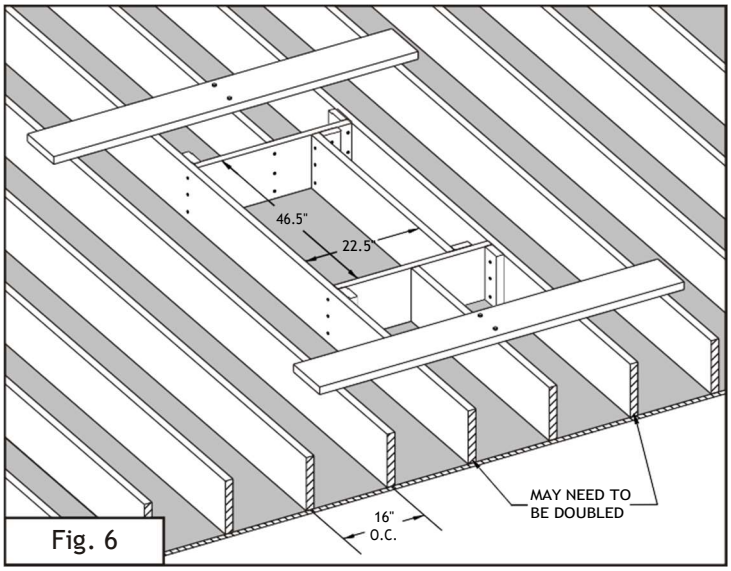

Fig. 6

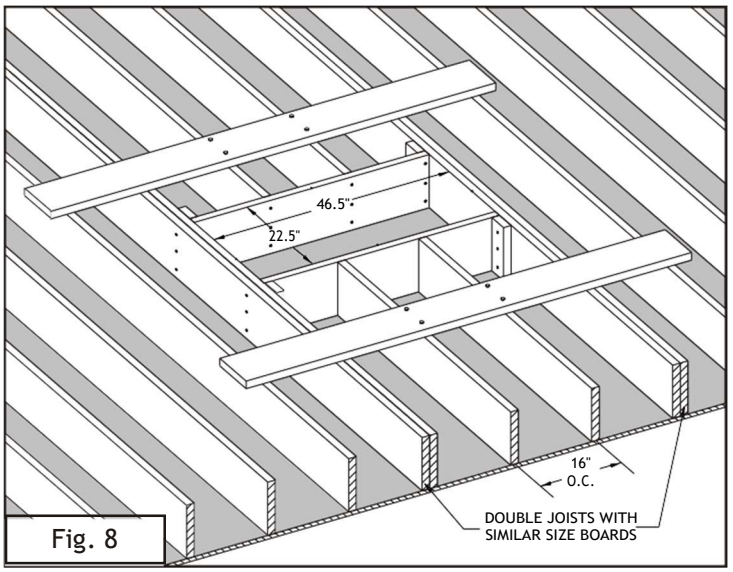

Fig. 8

Versa Lift Opening Framing Techniques

Optional Framing Technique #2 - For homes with SOLID WOOD JOISTS 16" OC: Choose the location. If your attic is decked, you will need to remove enough decking to expose the joists in the area of the opening. If your attic is not decked, then nail down some plywood on either side for a temporary work surface.

You will need temporary supports for any joist that will be cut. One technique is shown below using two 2 x 8" (minimum size) planks to span the adjacent joists. Each plank is secured with 2 lag screws to the joist(s) to be cut (Fig. 9). A framing square is used to mark guide lines for headers and cut lines (Fig. 9 inset). After cutting the joist, 2x4" or 2x6" blocking is installed (Fig. 10 & inset). Mark, cut, and install headers with blocking (Fig. 11 & detail). Trim the joist section removed in Fig. 9 and install it to finish the framed opening (Fig. 12 & inset). Cut the sheet rock flush with the opening (Fig. 13). Install decking flush. Finally, install the 2 x 2" flashing in the corners (Fig. 13).

Note: Corners must be covered with 2 x 2" "L" flashing to reduce wear and prevent possible lift malfunction.

See illustration on page 6 about joist hangers. Special care must be taken to hammer nails flat and to cover the joist hangers with the 2 x 2" "L" flashing!

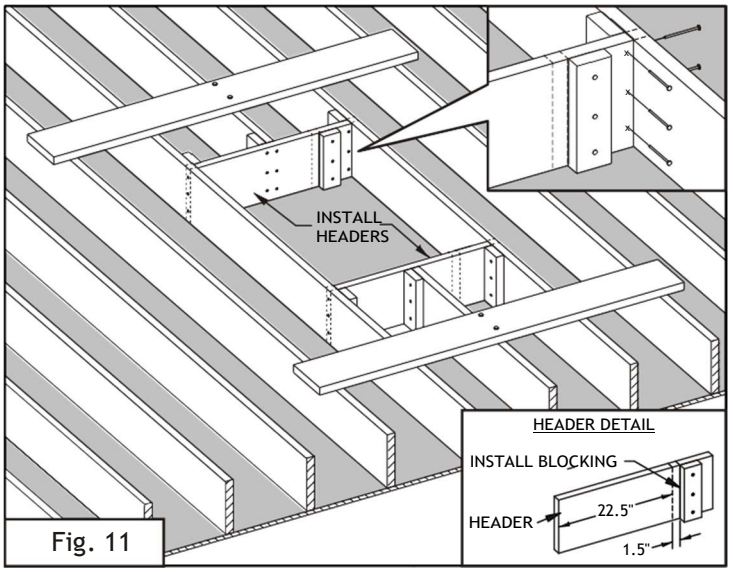

Fig. 11

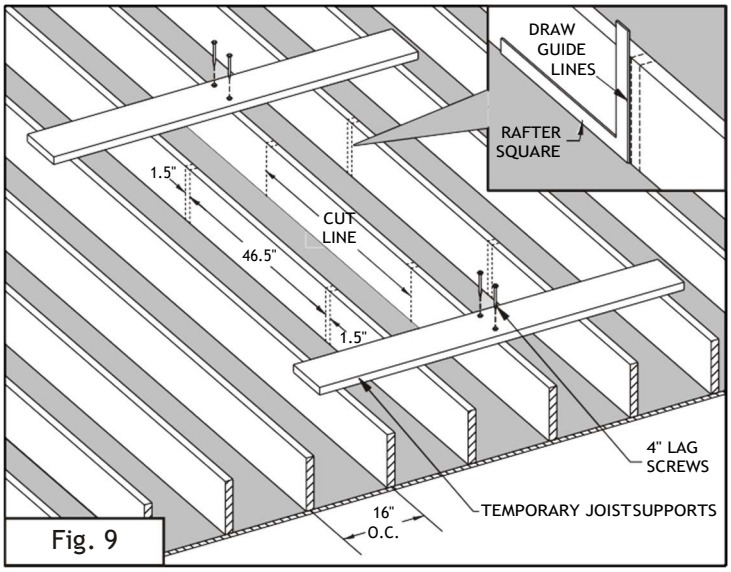

Fig. 9

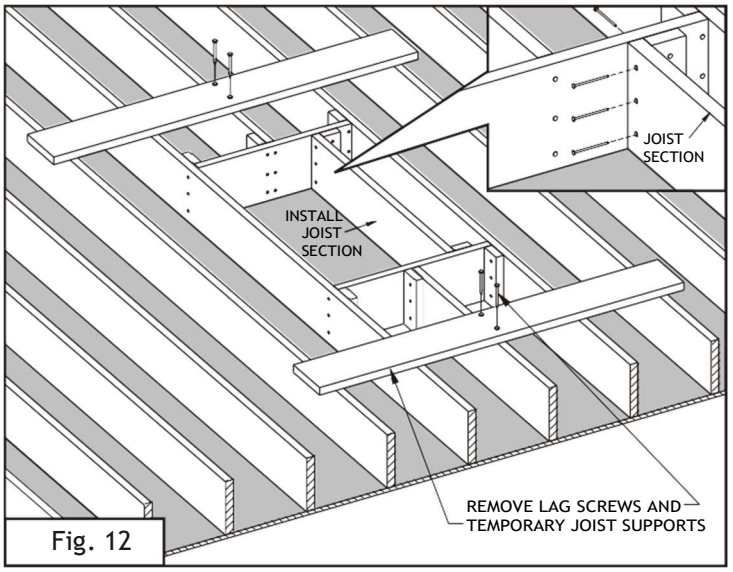

Fig. 12

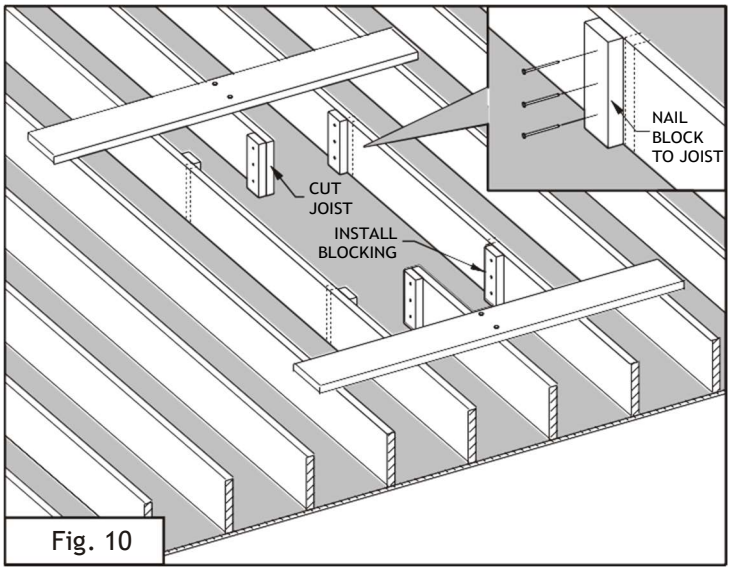

Fig. 10

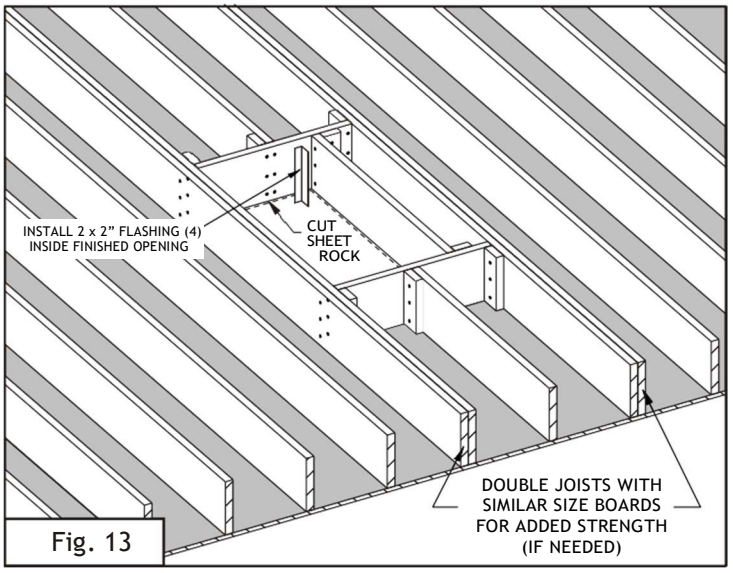

Fig. 13

Versa Lift Opening Framing Techniques

Optional Framing Technique #3 - for new homes with I-JOISTS 16" OC: This procedure is similar to the one for solid wood joists (see prior page). However, I-Joists are too narrow on the ends to hold a nail when attaching one I-Joist perpendicular to the face of another.

I-Joists can be joined perpendicular by using specially formed metal hanger brackets.

Another way to join I-Joists is to install blocking on the ends of I-Joist sections and headers (see Fig. 14). The block provides a thickness to the end of the I-Joist that can be nailed into. Second, the block is offset so that it fits into the inset in the face of the perpendicular I-Joist. The blocking should be attached securely (Fig. 14 inset) and placed on the side opposite the opening (since the opening must not have anything projecting inward).

I-Joists have recessed faces that form ledges that can hang-up the lifting platform as it travels downward from the attic. To resolve this problem and to cover any metal hanger brackets, **all I-Joist openings must be framed ½"oversized in each dimension to 47" x 23"** (Fig. 15). Next cut 1/4" thick plywood panels (Fig. 16 inset) and nail them to the four I-Joists faces inside the opening (Fig. 16). The final size opening will be 46 ½" x 22 ½" (Fig. 16). Please note that any nail heads in the opening must be set flush or below the surface and decking and sheet rock must be cut or installed flush to the opening (Fig. 2b & 16). Finish the opening by installing the 2 x 2" flashing in the corners (Fig. 16).

As with solid wood joists, I-Joists that need to be cut must be supported by some means until they are connected to headers that tie them to adjacent I-Joists.

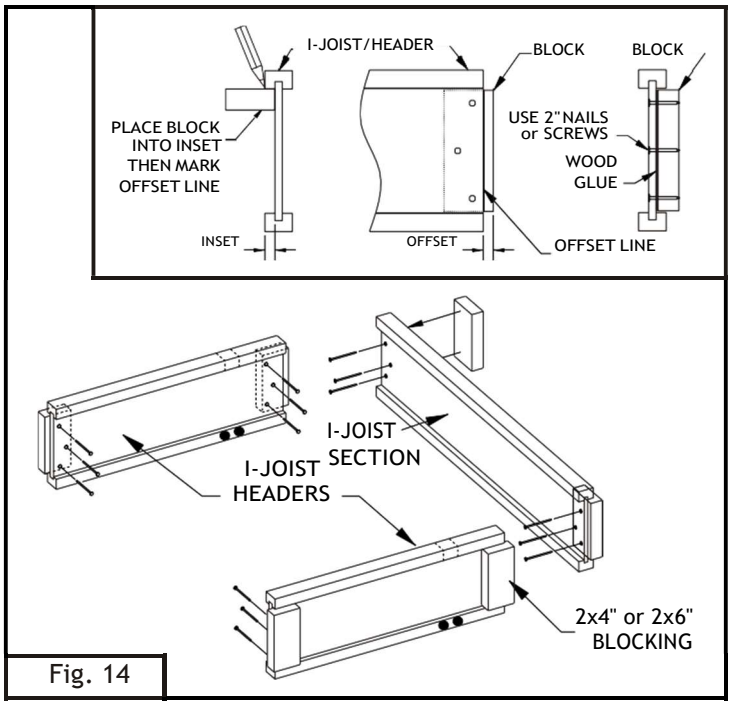

Fig. 14

NOTE: This technique requires that you have additional I-Joist material of the same size as that used in you ceiling. If you do not have access to additional I-Joist, then see the technique on the following page.

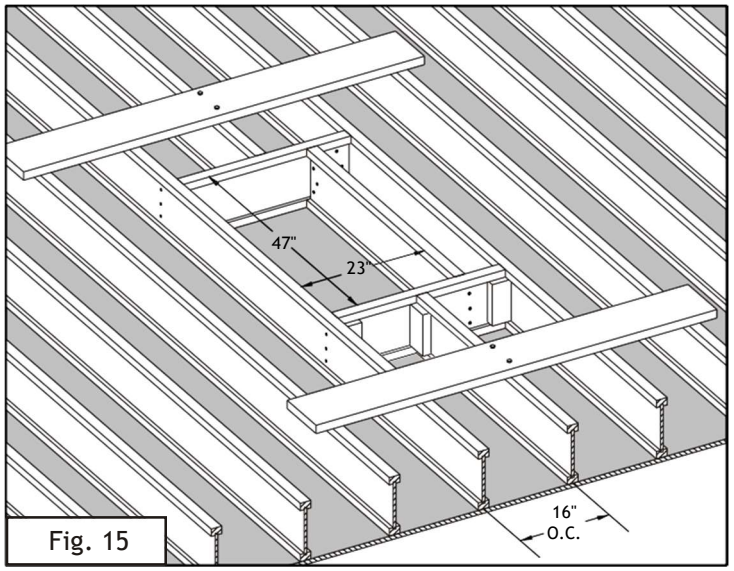

Fig. 15

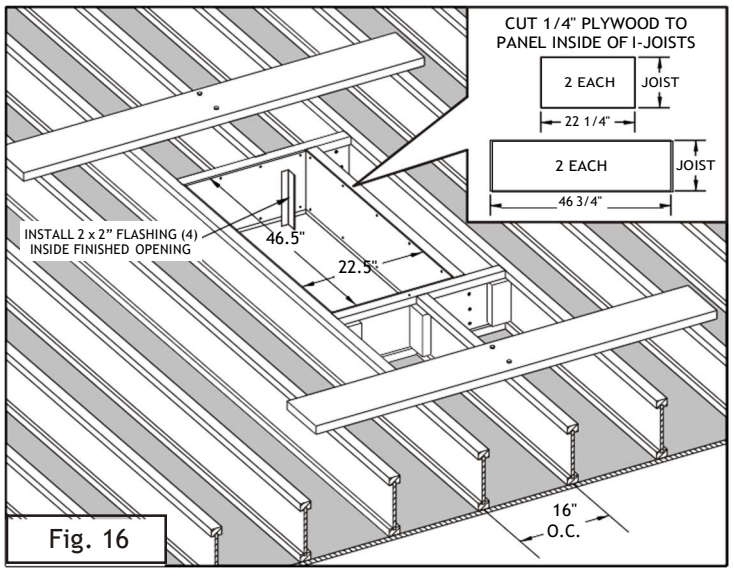

Fig. 16

Note: I-Joist hangers can be used instead of blocking. Finish opening with 1/4" paneling to cover hangers and create a smooth-sided opening (Fig. 16), then install 2 x 2" flashing in every corner (Fig. 16 & pg. 5).

Depending on location and code requirements, web stiffeners may be required for I-Joist when using hanger brackets.

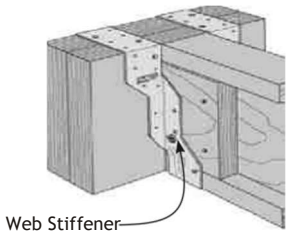

Optional Framing Technique #4 - For existing homes with I-JOISTS 16" OC: The procedure is generally the same as with I-Joists on the prior page, but when the home is a finished construction (already built and owned) you may not have extra I-Joist pieces from which to construct headers. In this case, you may need a way to construct headers from other available material.

One way to address this problem is to construct headers from ½"or 3/4" plywood and 2 x 2" rails (Fig. 17). Join the rails to the plywood with wood glue and nails or screws. Then attach offset blocking (Fig. 17) as previously explained. Headers constructed this way will have good strength and have the advantage of a smooth face toward the opening. NOTE: The blocking is attached **flush with the ends** of the I-Joist Section when using constructed headers with a flat inside surface (Fig. 17).

When headers are constructed as described above, the opening must be framed ½"oversized in only one dimension to 46 ½" x 23" (Fig. 18). Next, cut two 1/4" thick plywood panels (Fig. 19 inset) and nail them to the two I-Joist faces inside the opening (Fig. 19). The final opening size will be 23 ½" x 46 ½" (Fig. 19). Please note that any nail heads in the opening must be set flush or below the surface and decking and sheet rock must be cut or installed flush to the opening (Fig. 2b & 19). Finish the opening by installing the 2 x 2" flashing in the corners as shown in Fig. 19.

As with solid wood joists, I-Joists that need to be cut must be supported by some means until they are connected to headers that tie them to adjacent I-Joists.

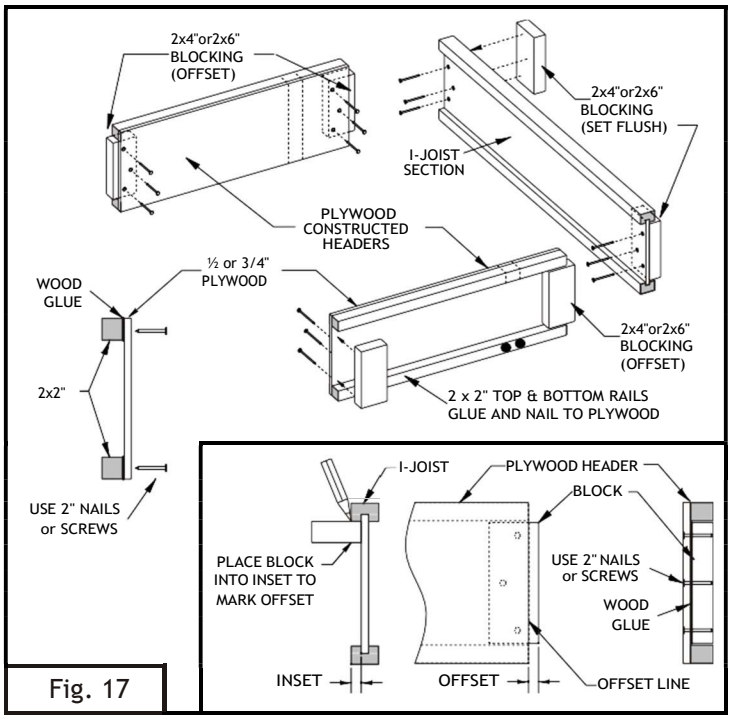

Fig. 17

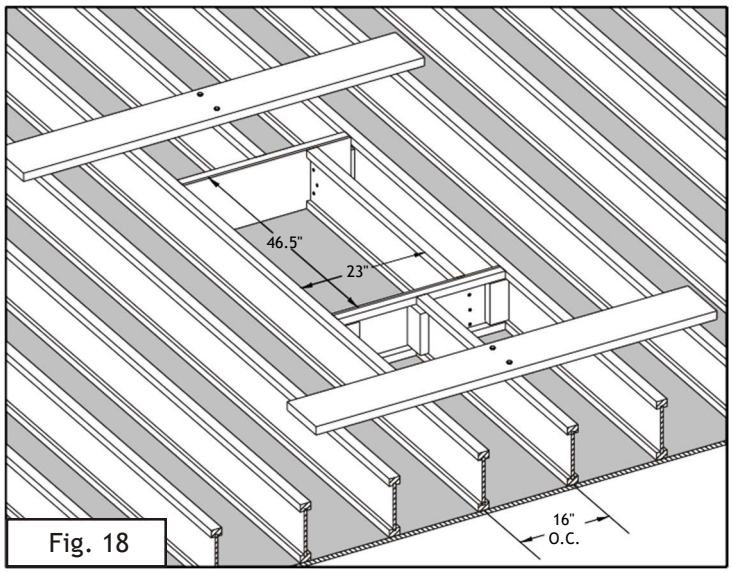

Fig. 18

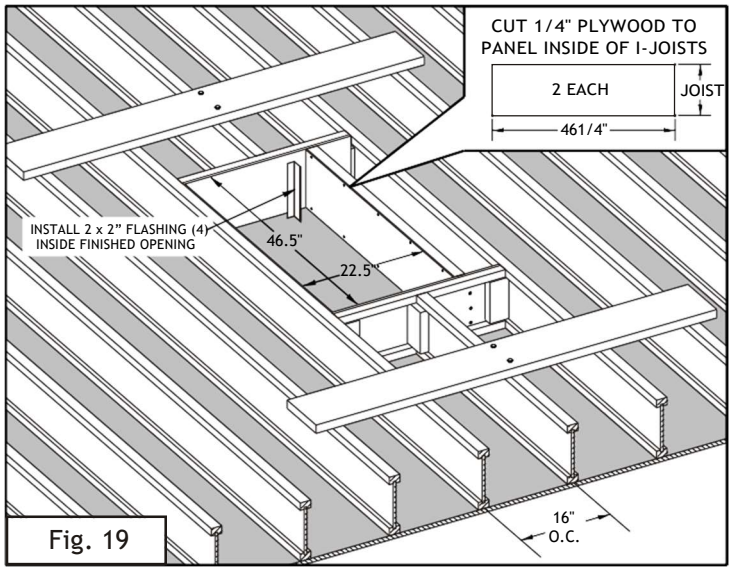

Fig. 19

Note: I-Joist hangers can be used instead of blocking. Finish opening with 1/4" paneling to cover hangers and create a smooth-sided opening (Fig. 16), then install 2 x 2" flashing in every corner (Fig. 16 & pg. 5).

Depending on location and code requirements, web stiffeners may be required for I-Joist when using hanger brackets.

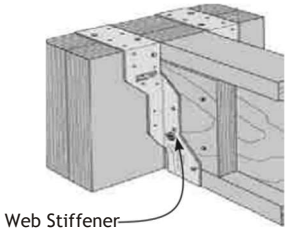

Versa Lift Carton Contents

All Models 24:
24, 24H, 24HX & 24HXX

1. UNPACKING: Save Carton #1! (You will need the two long lift housing cartons (overpack, telescoping box and foam blocks) for warranty repairs. So please save them!) The Versa Lift is packed in three cartons. The carton contents are shown below in Fig. 20. The fasteners shown in Fig. 20 inset will be in a hardware bag (you don't need to count the hardware). Open the cartons and check the contents to locate all of the items in Fig. 20. Also, check the components in all three cartons for any damage. If any components are missing or damaged, do not proceed with assembly. Contact us to get needed replacements for any missing or damaged items.

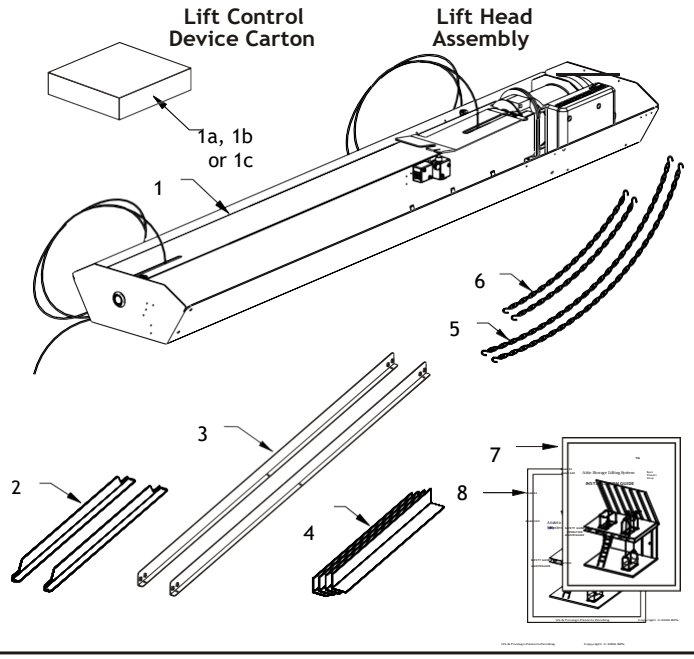

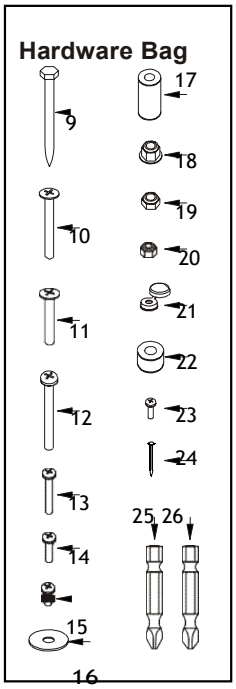

CARTON CONTENTS:

1. Model 24 Lift Head Assembly (1)
   1a. Corded Remote Control or
   1b. Mounted Wall Switches or
   1c. Wireless Radio Control
2. Short Door Braces (2)
3. Long Door Braces (2)
4. 2 x 2" x 20" "L" Flashing (4)
5. Long Chains (2)
6. Short Chains (2)
7. Installation Guide (1)
8. Owners Manual (1)

Hardware Bag Contents:

9. ¼" x 2½" Lag Screw (10)
10. ¼-20 x 2" Phillips Truss Screw (5)
11. ¼-20 x 1½" Phillips Truss Screw (28)
12. ¼-20 x 2½" Phillips Pan Screw (5)
13. 10-32 x 1" Phillips Pan Screw (10)
14. 10-32 x 5/8" Phillips Pan Screw (10)
15. 10-32 x 3/8" Phillips Pan Screw (10)
16. ¼ x 1" Flat Washer (10)
17. ½ x 1" Nylon Guide Spacer (10)
18. ¼-20 Tall Flanged Locknut (44)
19. ¼-20 Short Locknut (5)
20. 10-32 Locknut (10)
21. Screw Cover (10)
22. 1/2 x 3/8"Cable Clamp Spacer (12)
23. 6-32 x 5/16" Phillips Screw (5)
24. #17 x 1" Flashing Nails (50)
25. #2 Phillips Driver (for 6-32 & 10-32)
26. #3 Phillips Driver (for 1/4-20 screws)

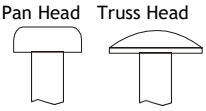

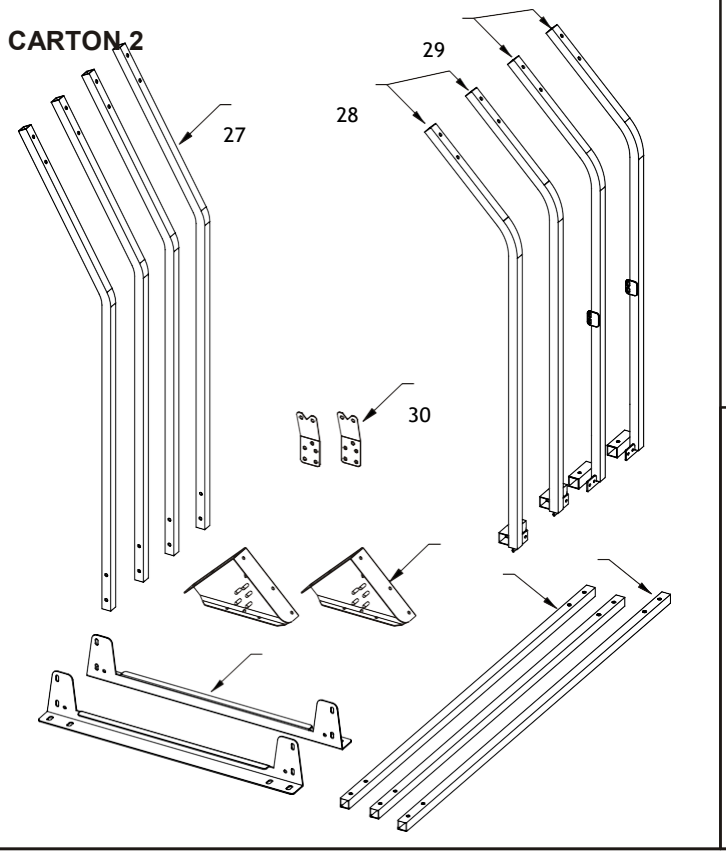

CARTON CONTENTS:

27. Lift Housing Legs (4)
28. Right Platform Legs (2)
29. Left Platform Legs (2)
30. Cable Clamps (2)
31. Platform Leg Brackets (2)
32. Mounting Rails (2)
33. Platform Supports (2)
34. Platform Top Brace (1)

Note: Hardware Bag contains extra hardware not listed here. Not all hardware will be used during this assembly.

CARTON 3 CONTENTS:

35. Platform Panel (1)
36. Door Panel (1)

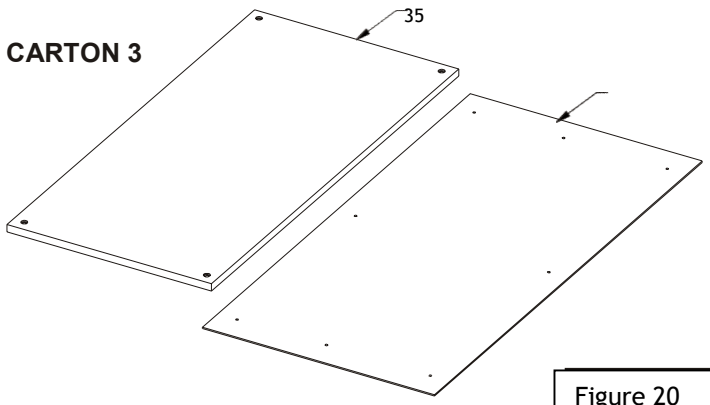

Figure 20

2a. LIFT HEAD ASSEMBLY - Using the *Rope Handles* provided, move the Lift Head into the attic for assembly. Warning! Heavy!! This job requires two able persons. *(After the lift head is in the attic, untie the rope handles and save them.)* Locate the other parts shown below and move them up to the attic for assembly to the Lift Head.

2b. INSTALL THE HOUSING LEGS
Assemble the four lift housing legs into the lift housing as shown. **The locknuts will not work loose, so don't over-tighten or you will collapse the square tubing. Note: The legs must fit to the INSIDE of the lift housing (see inset).**

2c. INSTALL THE MOUNTING RAILS
Assemble the mounting rails onto the lift housing legs, as shown, but do not tighten them yet. Leave them slightly loose for leveling adjustment Step4.

2d. INSTALL NYLON GUIDE SPACERS
Install two nylon spacers with a 2½" screw and locknut to the mounting rails in four places (by each leg) as shown below. Tighten them snug, but do not over-tighten.

⚠CAUTION **DO NOT RUN the Lift motor until this manual tells you to! THE LIFT WILL MALFUNCTION IF YOU DO!**

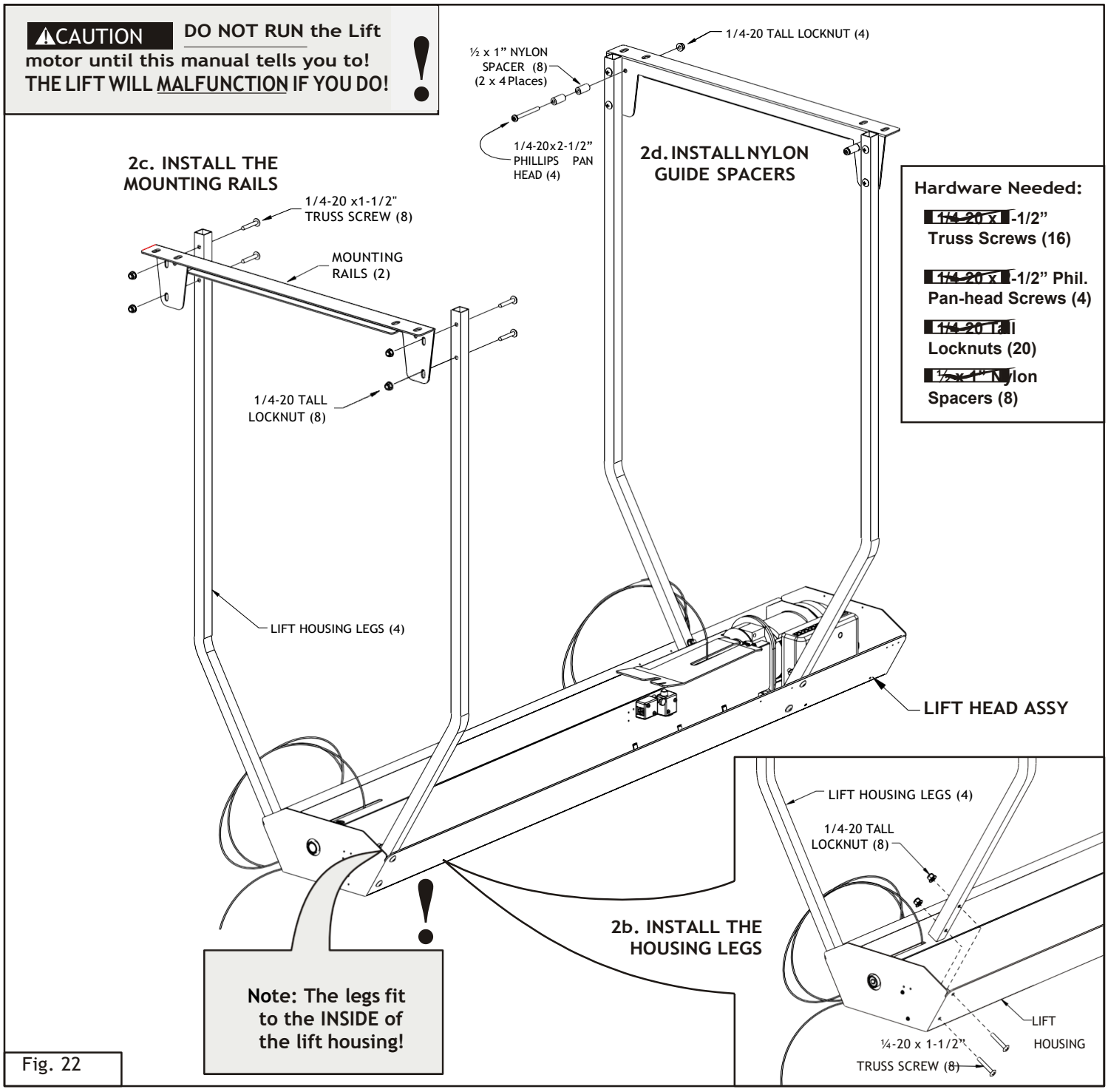

Fig. 22

3. INSTALLING THE LIFT HEAD

This step requires two persons. Turn the lift head assembly upright and position it in front of the opening (Fig. 23). With one person on each end, lift slightly and move the assembly over the opening (Fig. 23) and align the slots in the mounting rails with the pilot holes in the decking. Install the 8 lag screws and 1" diameter washers into the pilot holes and screw them down until they almost contact the mounting rail, but leave them loose so the mounting rails can be adjusted later (Fig. 23 inset). (Note: A couple of drops of dishwashing liquid in the pilot holes will make installing the lag screws easier.)

4. LEVEL THE LIFT HEAD

The screws that hold the legs to the mounting rail must be loose for this step. Place a bubble level lengthwise on the housing and see if head is level (Fig. 24). Place shims under both legs on the low end (Fig. 24 inset). Adjust the shims until the head is level, then tighten all 8 leg screws (Fig. 24 inset). Remove shims after bolts are tight.

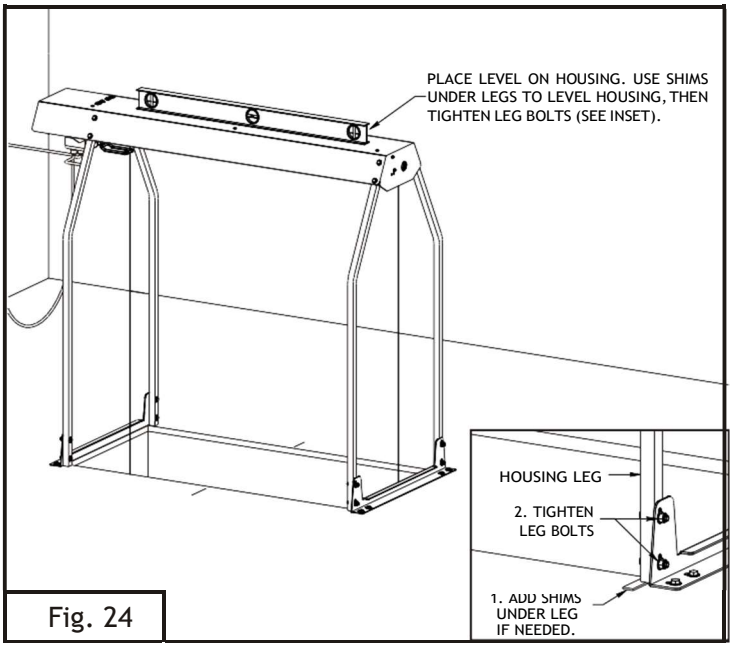

Fig. 24

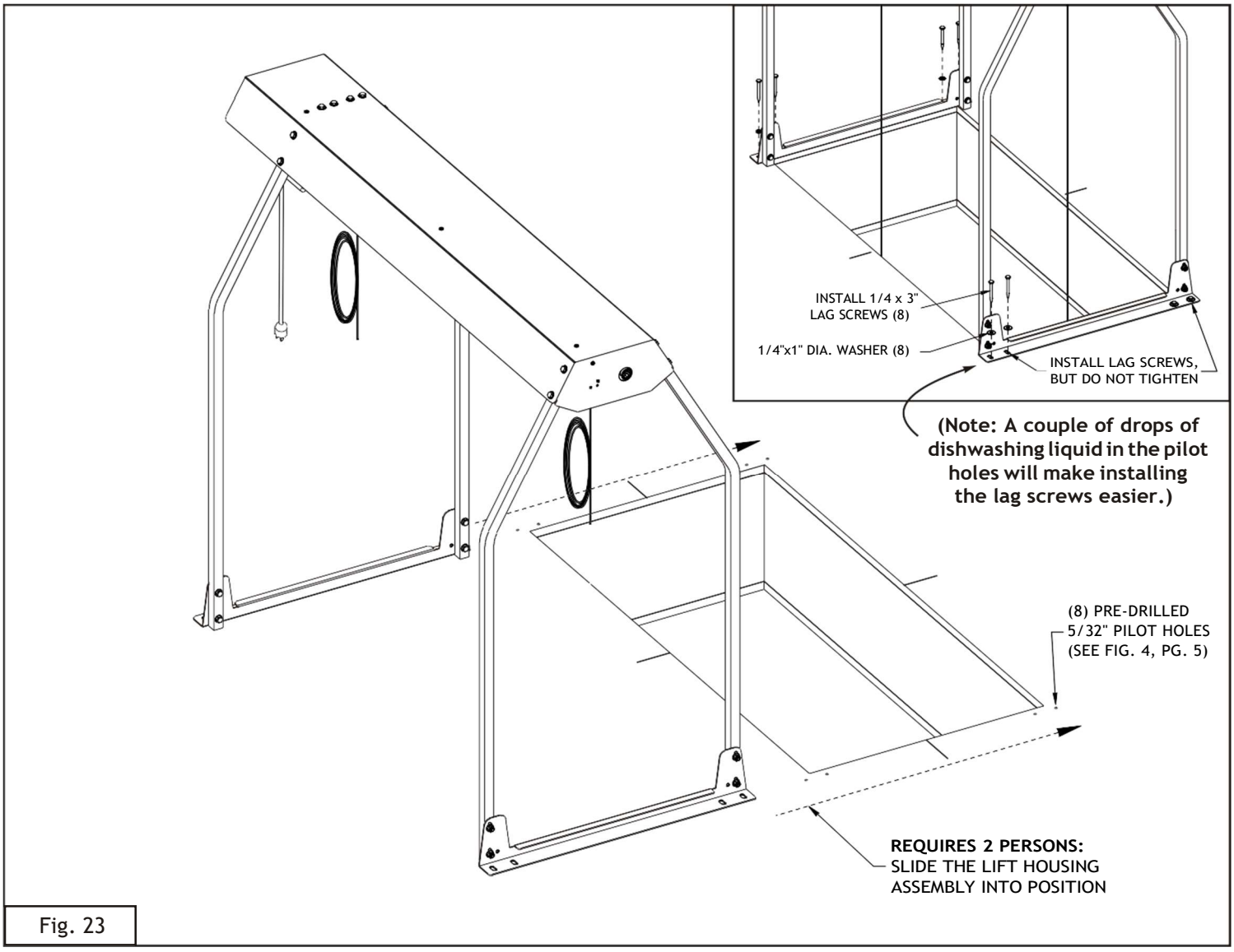

Fig. 23

5. DOOR ASSEMBLY

Assemble the door down-stairs. Locate the door, door braces, and fasteners shown in Fig. 25. Insert each screw through a screw cover, the door panel, then the door braces (see Fig. 25 inset). Note: Insert a 1/4 x 1" spacer washer under the center holes on the short braces as illustrated below.

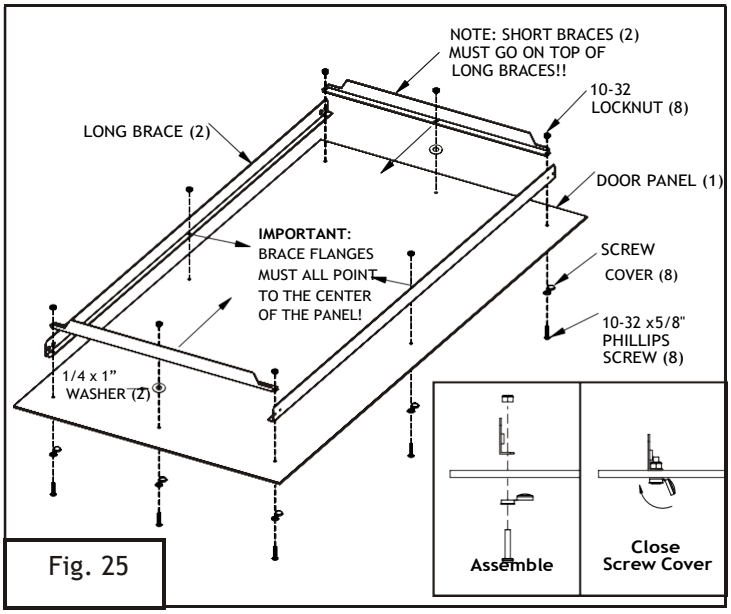

Fig. 25

IMPORTANT: Assemble all braces with small flanges pointing toward the panel center. Short braces must go on top of long braces. Fasten each screw with a locknut and tighten all 8 screws. Close the screw covers. Make sure they snap completely shut (Fig. 25 inset).

6. PLATFORM ASSEMBLY

The platform must be assembled down-stairs. Locate the platform, 2 platform supports, 4 platform legs, ¼-20 x 2" truss screws, and **short** locknuts (Fig. 26). **Note: The platform <u>top side</u> has warning labels.** Insert the platform support into one of the left legs as shown (Fig. 26 inset). Align the hole in the leg with the hole in the outer end of the support. Next insert a ¼-20 x 2" screw down through the platform, leg and support (Fig. 26). Secure screw with a **short** locknut, but do not tighten until all four screws are installed. When all legs are assembled as shown in Fig. 26, tighten all of the screws and locknuts, but do not over-tighten or you will collapse the tubing.

Locate the platform leg brackets, platform top brace, and fasteners shown in Fig. 27. Install each bracket with 4 truss screws and **tall** locknuts (Fig. 27 inset). Tighten as above. Install the platform top brace with 2 truss screws and **tall** locknuts (Fig. 27). Tighten fasteners as above.

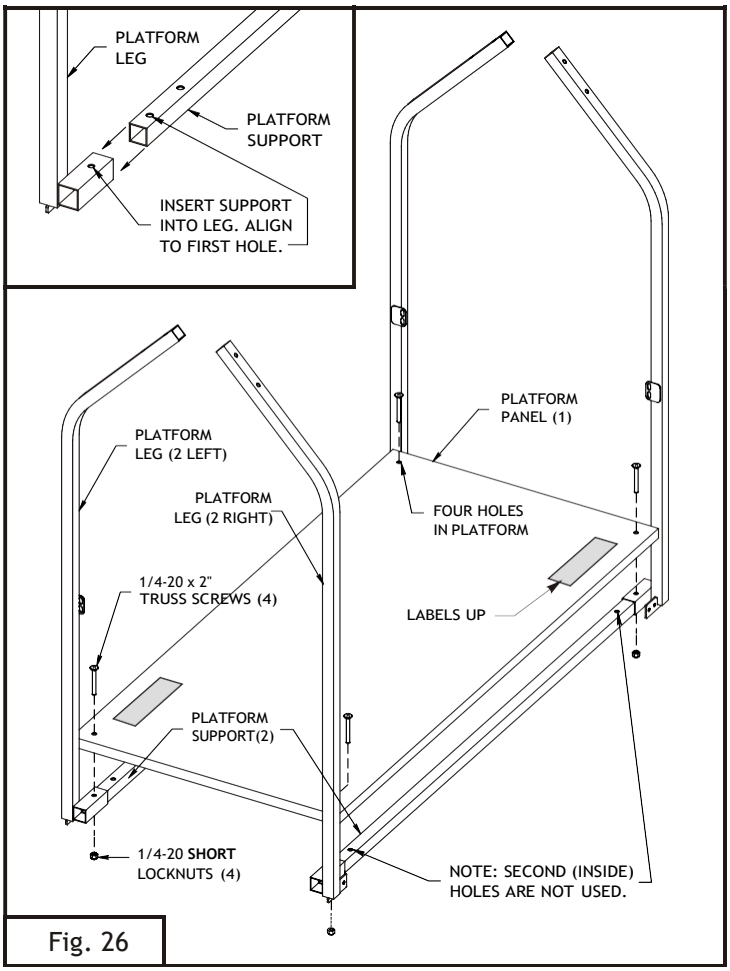

Fig. 26

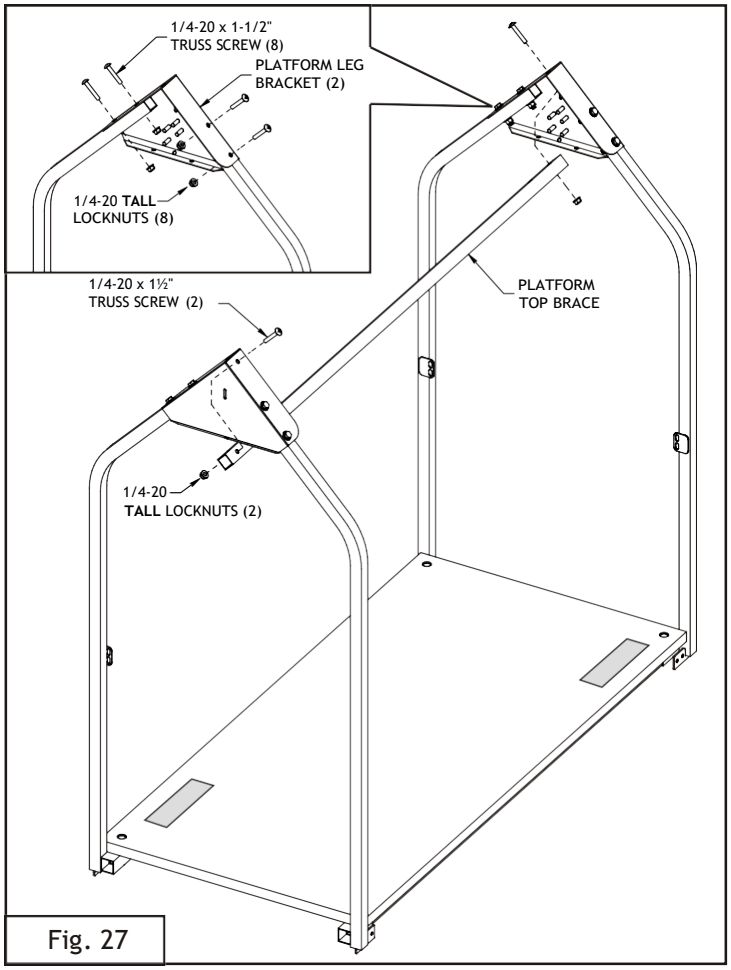

Fig. 27

7. DOOR AND PLATFORM ASSEMBLY

7-1. Locate the (8) 10-32 x 3/8" screws. Lift the platform assembly onto the door assembly (Fig. 28).

Note: The spring brackets on the end of the platform legs fit outside of the door braces (Fig. 28 inset).

7-2. Install and tighten the screws through the spring brackets and into the door braces.

7-3. Locate the short and long chains. The last link on each end of each chain is open to form a hook. Hook the end of each chain onto the chain brackets on each platform leg (Fig. 28 and inset). You can open the hook further with pliers, if needed, to make it easier to hook.

7-4. Close the hooks on both ends of the short chains so the chain is secured to the chain brackets. Close one hook on each long chain, leaving the other ends open for loading the platform.

Refer to the Owners Manual for complete information about using the chains and how to safely load a variety of cargo items on the platform.

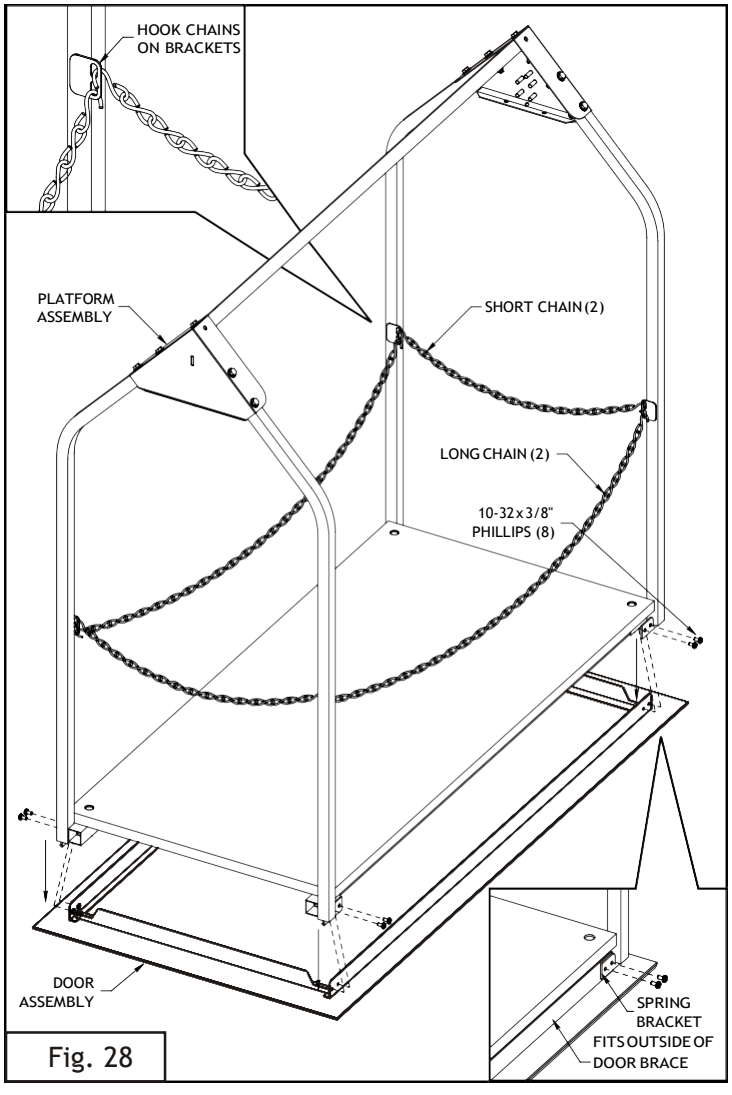

Fig. 28

STOP! If you have already operated the Lift Motor:

STOP and DO NOT PROCEED TO STEP 8! Contact BPG immediately (405-491-8550) to get the tech-doc. about how to return the motor to the factory preset position to prevent a serious malfunction of this Lift!

8. CONNECT THE LIFT HEAD TO THE PLATFORM

8-1. Release the cables and let them hang down through the lift opening. Check under housing to see that cable is coming straight down out of the slots (Fig. 29 insets). Make sure the cables are not kinked, tangled or fouled.

8-2. Position the lifting platform assembly directly below the lift opening (Fig. 29). **WARNING: The platform must sit directly on the floor to attach the cables (not on a box or a table)**. This sets the cable length so the Lift will reach your floor and know where to stop automatically.

8-3. Pass the ends of the cables through the slots in the platform leg brackets as shown in Fig. 30.

8-4. Pull the cable tight and wind it tightly around the threaded studs **exactly as shown** in the illustration. Wrap it as tightly as possible. Pinch the last loop around the last stud, then pass the end of the cable through the center hole in the bottom of the leg bracket (Fig. 30).

8-5a. Draw the cable tight by pulling firmly on the end of the cable (Fig. 30).

IMPORTANT: To avoid damaging the studs, do not use a power tool to install the cable clamp nuts! Use only a socket and ratchet or an end wrench!

8-5b. While holding tension on the cable, install the cable clamp with the top half leaning away from the cable (see Fig. 30), then install a 1/2 x 3/8" aluminum spacer and **tall** locknut on the last stud and snug it down to hold the cable, but don't tighten it yet. Install the rest of the alum. spacers and **tall** locknuts and snug them down **(*snug is when the nut gets a little tight and you can't turn the aluminum spacer with your fingers*.)** Install the second cable and clamp, applying the same tension as with the first cable. A little bit of slack in the cables is normal.

8-6. Torque all 10 locknuts to 5 foot pounds (60 inch pounds). **If you do not have a torque wrench, then snug all 10 locknuts as explained above, then turn each nut one-half turn (180 degrees) beyond snug (see Fig. 31). *Do not over-tighten these nuts or you may break the studs off!***

8-7. You don't need to cut the excess cable, you can thread it through the two holes in the bottom of the leg bracket (Fig. 32) or you can wind it into a coil and zip tie it inside the bracket. If you do cut off the excess cable, you must leave at least a foot so that you can re-adjust the cable if it becomes necessary.

NOTE: It is important that the excess cable is secured where it can't get caught in the lift opening when the platform goes up or down.

8. CONNECT THE LIFT HEAD TO THE PLATFORM

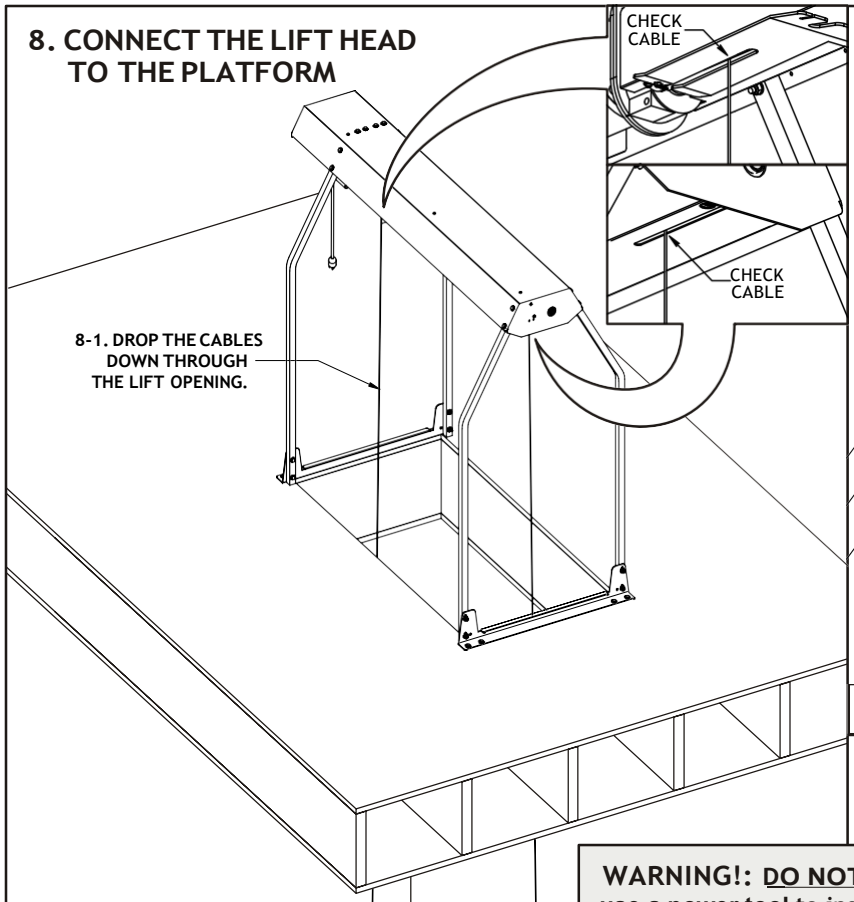

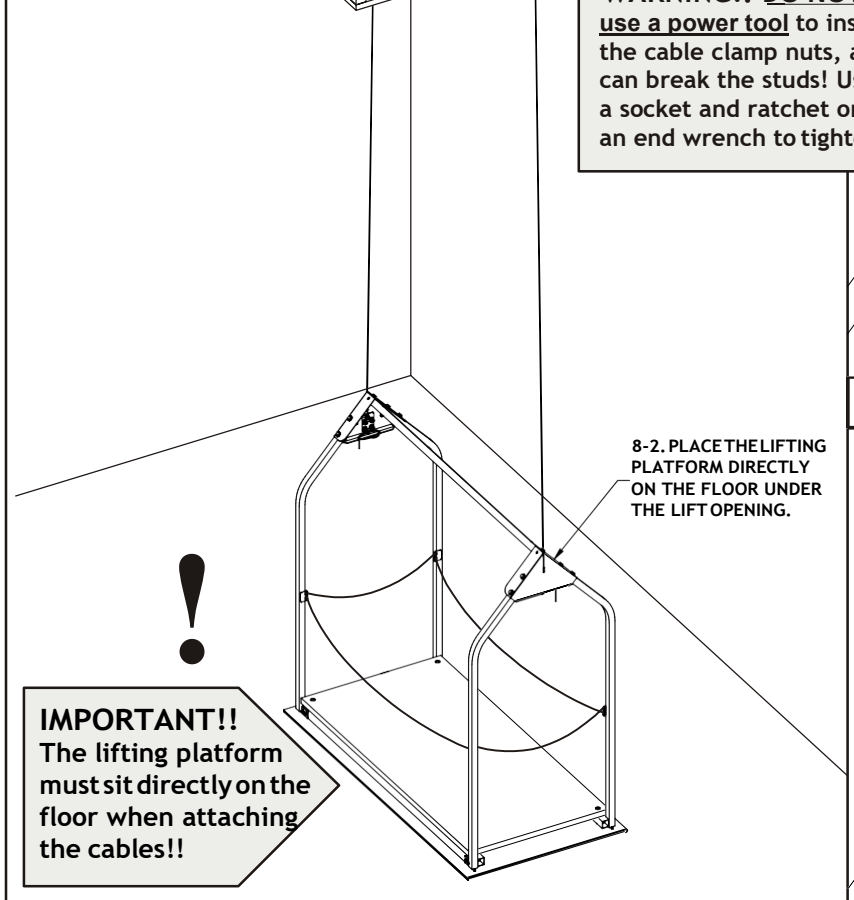

IMPORTANT!!
The lifting platform must sit directly on the floor when attaching the cables!!

Fig. 29

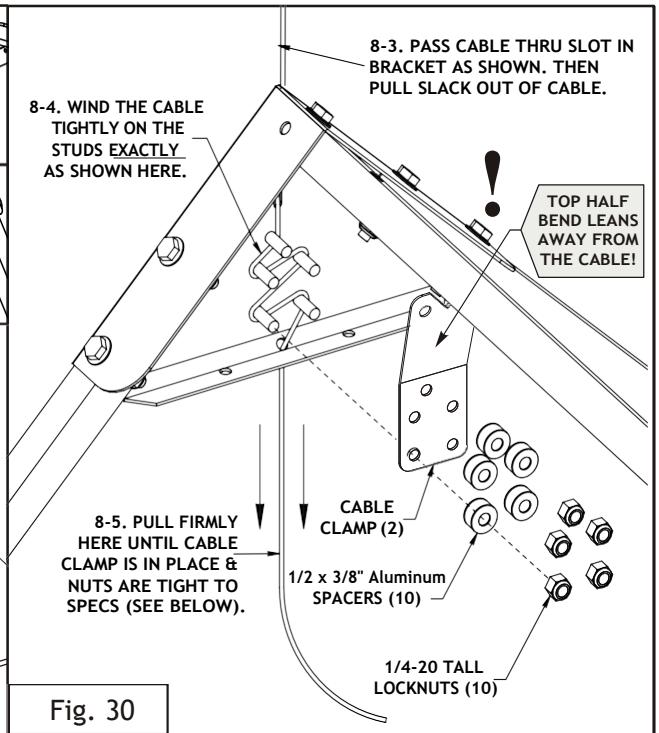

Fig. 30

WARNING!: DO NOT use a power tool to install the cable clamp nuts, as this can break the studs! Use only a socket and ratchet or use an end wrench to tighten!

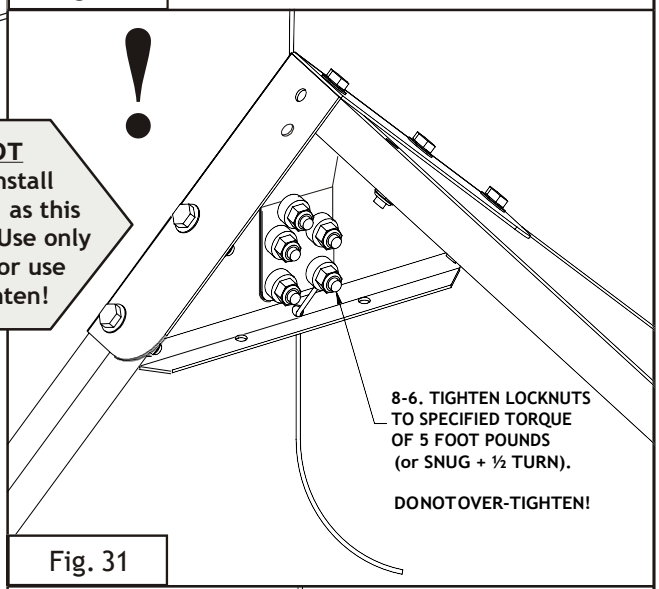

Fig. 31

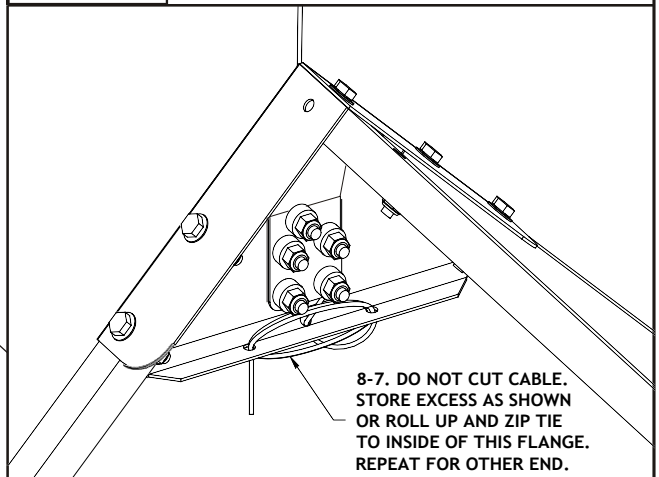

Fig. 32

9.1. REMOVE THE PACKING SCREW

Remove the packing screw (see Fig. 33a) to release the upper limit switch lever. **NOTE: The Lift will not run in the up direction until this lever is free to operate the up limit switch!**

9.2. PLUG IN YOUR CONTROL DEVICE

There are three control options for the Versa Lift. General information about each control is provided in Fig. 33b, shown to the right. *(Detailed information and required hardware is provided in the box your control came in).*

- The corded remote (keyed) plugs into Port #1.
- The downstairs (keyed) wall switch plugs into Port #1, while the upstairs wall switch (no key) plugs into Port #2.
- The wireless radio receiver plugs into Port #1. (The receiver can be mounted on the back of the lift head, or on either side of the lift head. See Fig. 33a.)

See Fig. 33a below for the location of control Ports #1&2. Please note the orientation of the locking tab on the plug, as the plug will only insert one way. The locking tab must be depressed whenever you wish to remove the plug.

For more information about the control devices, safety, and Lift operation, please refer to the Owners Manual.

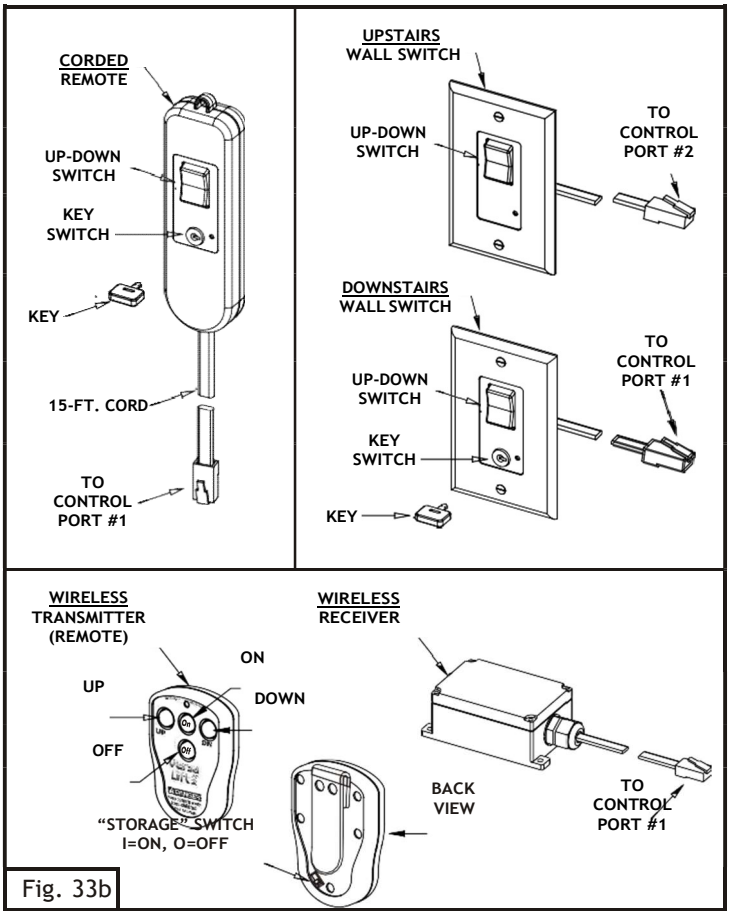

Fig. 33b

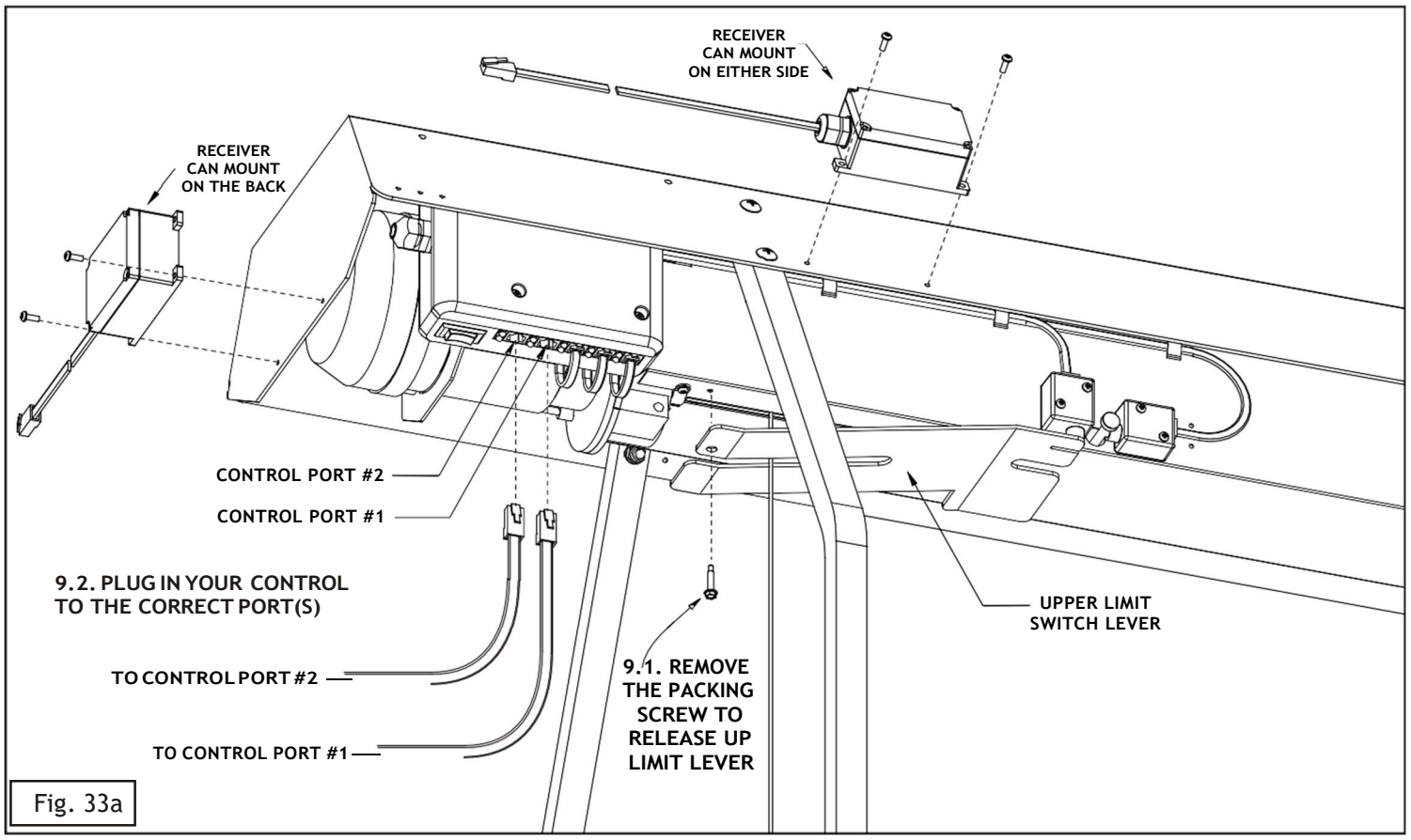

Fig. 33a

10. RAISE THE LIFTING PLATFORM
Review steps 2-8 to make sure you haven't missed any assembly steps. All screws must be tight **except the lag screws** that hold the mounting rails to the deck. They should be loose enough that the rails can be moved freely the distance that the slotted holes allow.

10-1. Make sure the power cord and control cords are clear of the lift opening and are not wrapped around the housing or the housing legs (Fig. 34).

10-2. Plug in the power cord (Fig. 34) to the power outlet.

10-3. Stand clear of the lift and keep your hands clear. Turn the main power switch to "ON" so it is lighted red. Turn ON your control device as explained in Step 9. Press the "UP" direction switch and watch as the platform comes up. When the platform enters the opening, jog the "UP" direction switch to move the platform in small increments, watching to make sure that it does not catch or bind on the opening. (If the platform hangs in the opening, correct any causes before continuing the operation.)

10-4. When the platform comes all the way up, it will lift the upper limit switch lever (see Fig 33a), stopping the motor and the platform before it can impact the Lift Head. The platform should be approximately level with the floor.

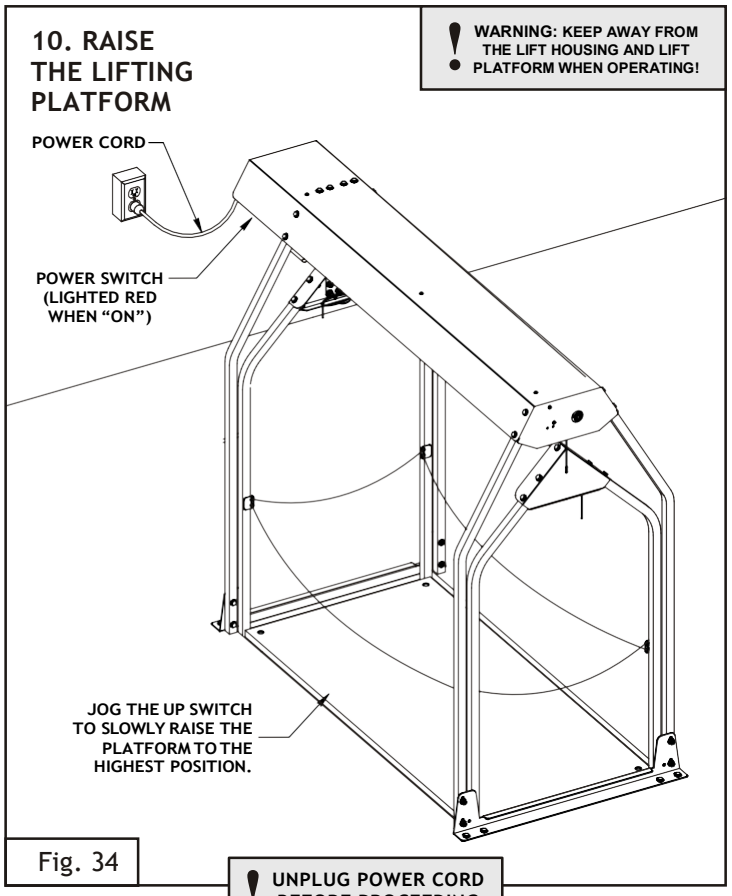

Fig. 34

! Turn off the key or power switch and unplug the power cord before proceeding to the next steps.

11. ADJUST THE MOUNTING RAILS
Adjust the mounting rails to center the lifting platform in the opening. Mark the platform center by measuring 22" in from either end and making a small mark (see Fig. 35).

11.1 The mounting rail holes are slotted for adjustment. Push both mounting rails inward against the platform and move the rails and platform left or right until the platform center marks are aligned with the opening center marks.

11.2 With the platform centered and the rails pressed up against each side of the platform, tighten the (4) lag screws on the **first** mounting rail, but don't over-tighten! Place a 1/16" to 1/8" shim spacer between the **second** mounting rail and the platform legs and tighten the remaining (4) lag screws (see Fig. 35).

Note: a strip of single-wall corrugated is a good shim.

11.3 Remove the shim spacers and check your work:

The platform assembly should freely move front-to-back between the guide spacers and side-to-side between the mounting rails 1/16" to 1/8".

! UNPLUG POWER CORD BEFORE PROCEEDING TO THE NEXT STEP!

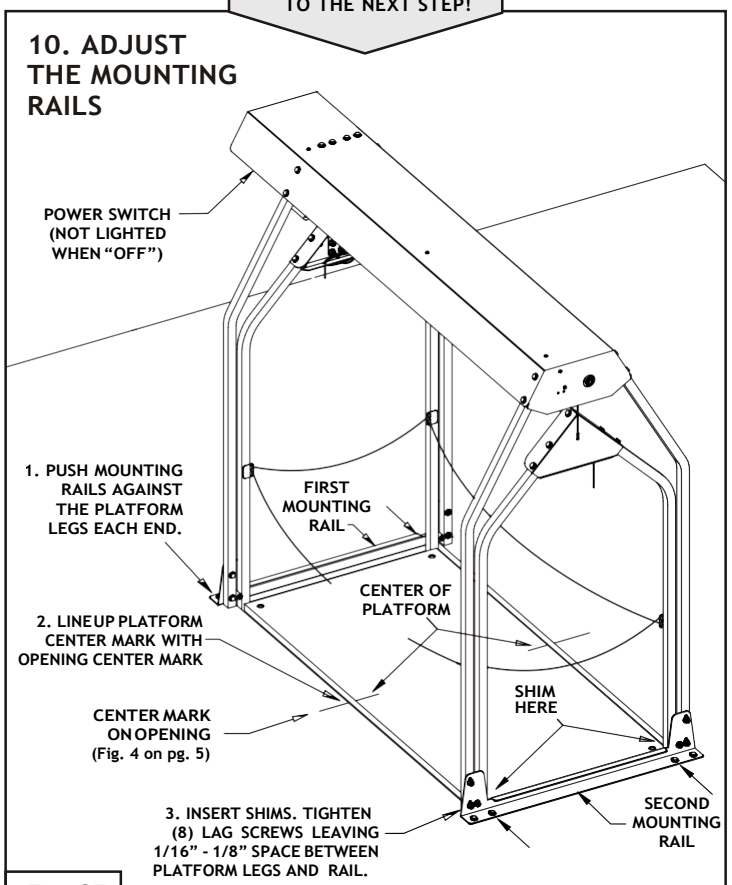

Fig. 35

12. CENTER THE LIFT HOUSING: IMPORTANT STEP!!

To operate correctly, the lift housing must be adjusted so it is centered over the floor opening. If not centered, the cables will not wind evenly onto the winch drum. Take these steps to center the lift housing.

Step 1: Lower the lift platform until the top is even with the top of the mounting rails. See Fig. 36.

Step 2: Look closely at the space between the outside ends of the platform triangle brackets and the inside walls of the mounting rails. Determine which space is larger, left or right.

Step 3: Adjust the position of the lift housing by pushing it firmly left or right as shown in Fig. 36. If the left space is larger, then push the lift housing right. If the right space is larger, push the housing left. Repeat these steps until the left and right spaces are equal.

Note: Even though the housing legs are bolted tightly to the housing, they will move slightly when forced and this will allow the housing to shift laterally.

Congratulations! Your installation is complete!

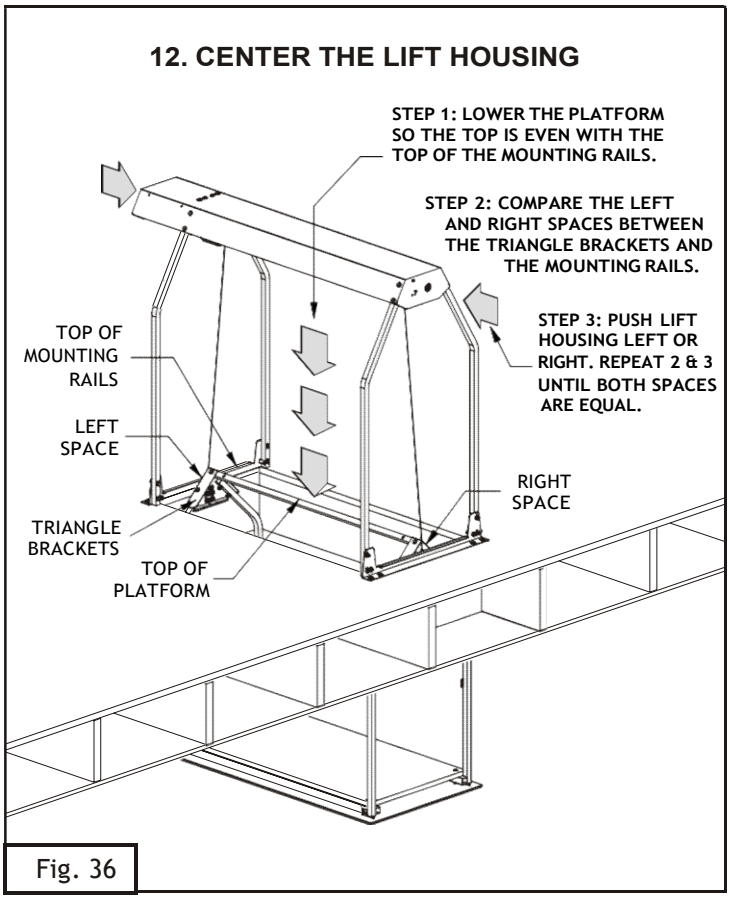

Fig. 36

⚠WARNING **To reduce the risk of serious injury, or death, do not ride the Lift! Read the Owners Manual before operating the Versa Lift!**

The owners manual provides many important facts about your safety when operating the VersaLift. The owners manual also explains the many VersaLift operating features and tips that you will want to know.

Versa Lift
Attic Storage Lifting System

The proper way to operate your new Versalift after it has been installed and tested....

1. Always press the down button the ENTIRE time allowing the Versalift to come to a stop automatically when it comes to rest on the floor.

2. Always press the up button until the lift stops on its own in the attic. The lift will shut itself off when it arrives flush with the attic floor.

This practice allows the lift to maintain the cable around the cable drum properly insuring a trouble free operation for years to come.

DO NOT lower the lift onto a box, workbench, pickup bed or at waist/knee height to unload. This practice can cause the cable to wind up backwards creating an issue with the cable around the drum, which can result in damage to the lift or injury.

Put your load in the center of the lift, or stacked as evenly as you can to insure a smooth operation.










NOTICE: The VersaLift is available in 1 of 3 Switching Methods.

1. **Corded (Standard Series)**
2. **Wireless Remote ("W" Series)**
3. **Mounted Wall Switches ("M" Series) (2)**

You CANNOT HAVE A CORDED and a WIRELESS or MOUNTED it is either/or. You CAN upgrade at any time.

Versa Lift Corded Remote Control Kit

CORDED REMOTE CONTROL KIT INSTRUCTIONS:
These instructions are supplemental only! To avoid system damage: FIRST, please follow every step in the ***Versa Lift Installation Guide*** Steps 1 thru 9.2!

DO NOT CONNECT these controls until you have completed EVERY installation step 1 thru step 9.2. In **"STEP 9.2 PLUG IN YOUR CONTROL DEVICE"** you will be told to connect these controls.

9.3. Corded Remote Control Kit Contents:
-Handheld Remote Control with
15ft Remote Cord with Plug (1)
-6-32 x 1/4" Phillips Screws (2)
-Cord Clamp strain relief (1)

THEN FOLLOW THESE INSTRUCTIONS:

9.4. Connect the Remote Cord Plug
Insert the remote cord plug into Control Port #1 (Fig. 1a).

9.5. Secure your Remote Cord to the Lift Head
Use two 6-32 x 1/4" screws to mount the Cord Clamp to the Lift Head, securing the cord against strain (Fig. 1b inset). Take care to center the cord under the clamp as you tighten the screws. This clamp will help prevent damage to your lift motor driver board if the remote cord is accidentally pulled on to hard.

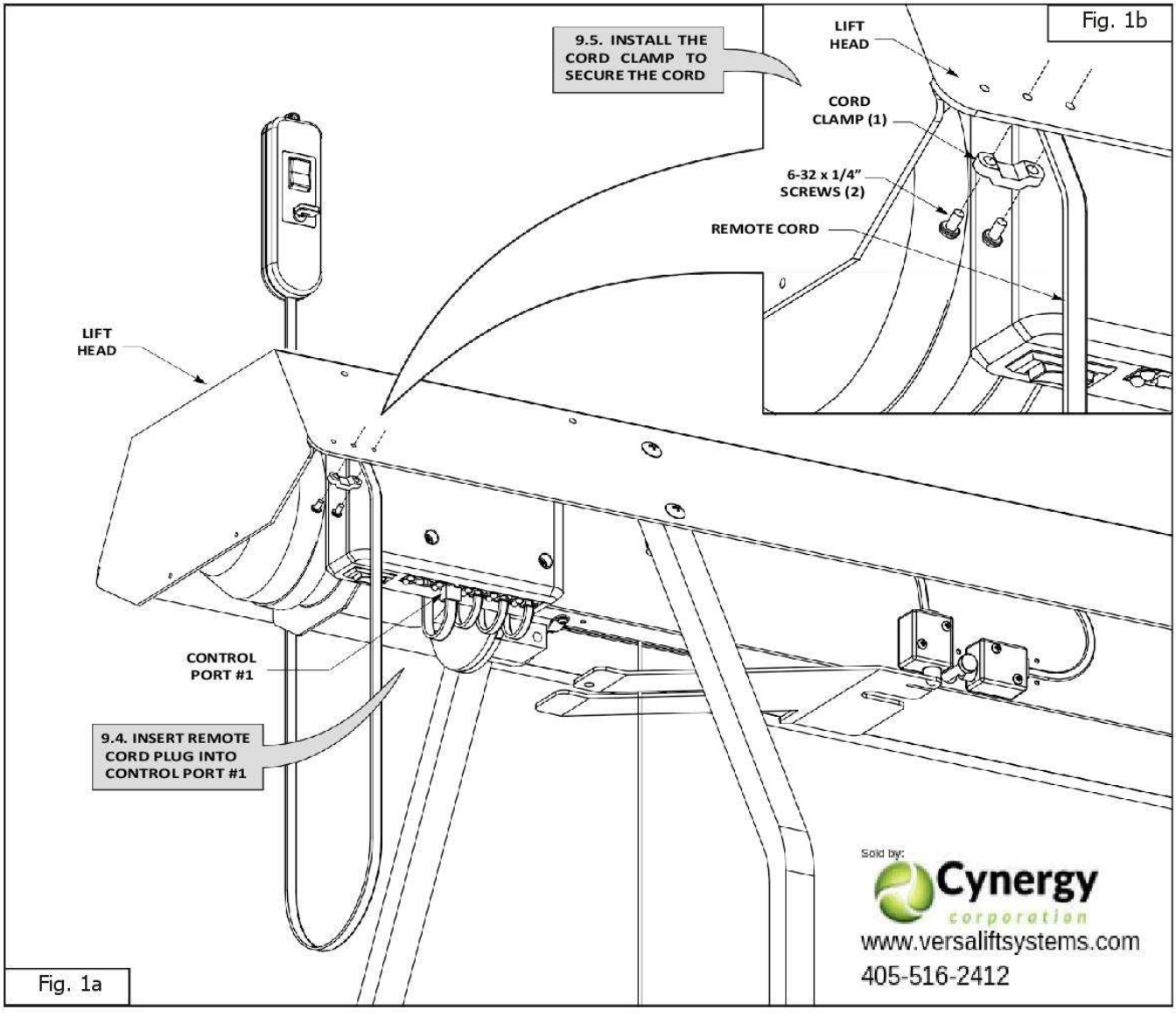

Fig. 1b

Fig. 1a

MOUNTED WALL **SWITCH CONTROL** KIT **INSTRUCTIONS:**

These instructions are supplemental only! To avoid system damage: FIRST, please follow every step in the *Versa Lift Installation Guide* Steps 1 thru 9.2!

DO NOT CONNECT these controls until you have completed EVERY installation step 1 thru step 9.2. In "STEP 9.2 PLUG IN YOUR CONTROL DEVICE" you will be told to connect these controls.

↓ ↓ THEN FOLLOW THESE INSTRUCTIONS ↓ ↓

9.3. Mounted Wall Switches Control Kit Contents:

- Non-Locking Switch Plate (1)
- Key-Locking Switch Plate (1)
- 6-32 x ½" Flat Head Phillips Screws (4)
- Wall Plates with Screws, White (2)
- 10-ft. Upstairs Control Cord (1)
- 50-ft. Downstairs Control Cord (1)

9.4. Install the Non-Locking Wall Switch Upstairs
Plug the 10-ft control cord into the non-locking switch plate. Install the non-locking switch plate into an single gang wall box **upstairs** using two 6-32 x ½" flat head phillips screws (Fig. 1a). Tighten the screws lightly!

9.4. Install the Key-Locking Wall Switch Downstairs
Plug the 50-ft control cord into the key-locking switch plate. Install the key-locking switch plate into a single gang wall box **downstairs** using two 6-32 x ½" flat head phillips screws (Fig. 1b). Tighten the screws lightly!

9.6. Plug in the Upstairs Wall Switch
Install the plug for the **upstairs** wall switch (10-ft.) control cord into the Lift Head **control port #2** (Fig. 1c).

9.7. Plug in the Downstairs Wall Switch
Install the plug for the **downstairs** wall switch (50-ft.) control cord into the Lift Head **control port #1** (Fig. 1c).

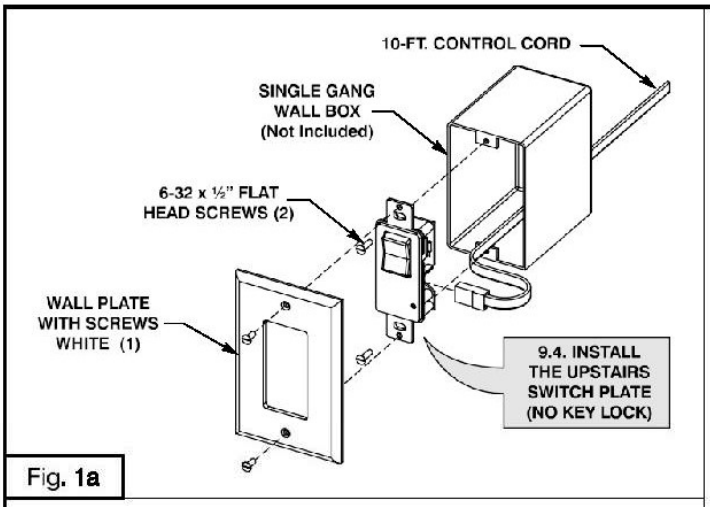

Fig. 1a

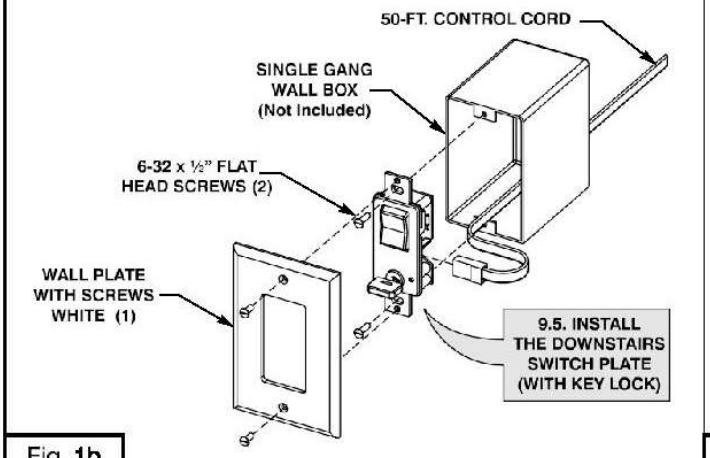

Fig. 1b

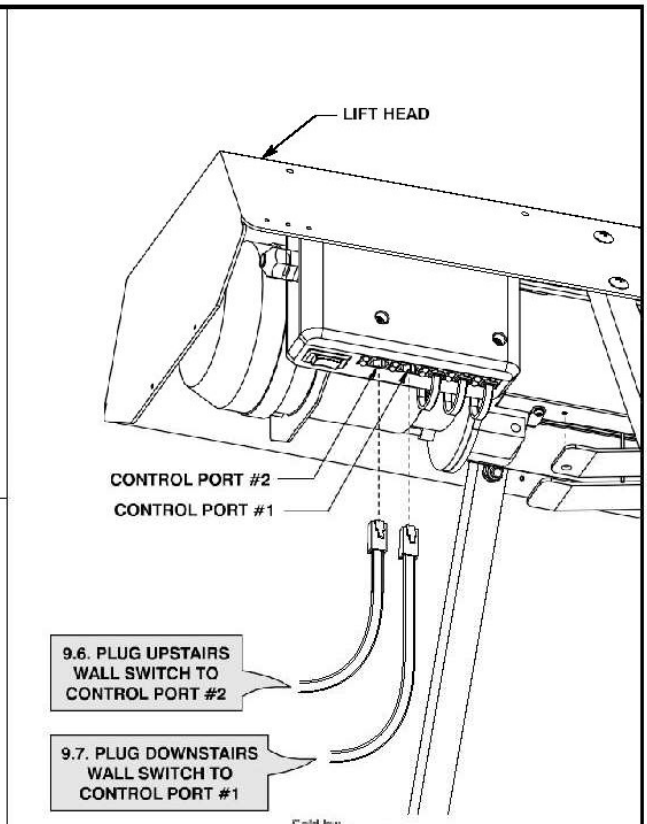

Fig. 1c

Sold by:
Cynergy corporation
www.versaliftsystems.com
405-516-2412

Versa Lift *Panther* Wireless Transmitter & Receiver

WIRELESS CONTROLS KIT INSTRUCTIONS:

These instructions are supplemental only! To avoid system damage: FIRST, please follow every step in the *Versa Lift Installation Guide* Steps 1 thru 9.2!

DO NOT CONNECT these controls until you have completed EVERY installation step 1 thru step 9.2. In "STEP 9.2 PLUG IN YOUR CONTROL DEVICE" you will be told to connect these controls.

→ → THEN FOLLOW THESE INSTRUCTIONS → →

9.3 Wireless Controls Kit Contents:

- Transmitter Remote (1)
- Wireless Receiver with Plug (1)
- 6-32 x 5/16" Phillips Screws (2)

9.4. Mounting your Wireless Receiver

Use the two 6-32 x 5/16" screws to mount the receiver in one of three locations on the Lift Head (Fig. 1b).

9.5 Connect the Receiver Plug

Install the receiver plug into Control Port #1 (Fig. 1b).

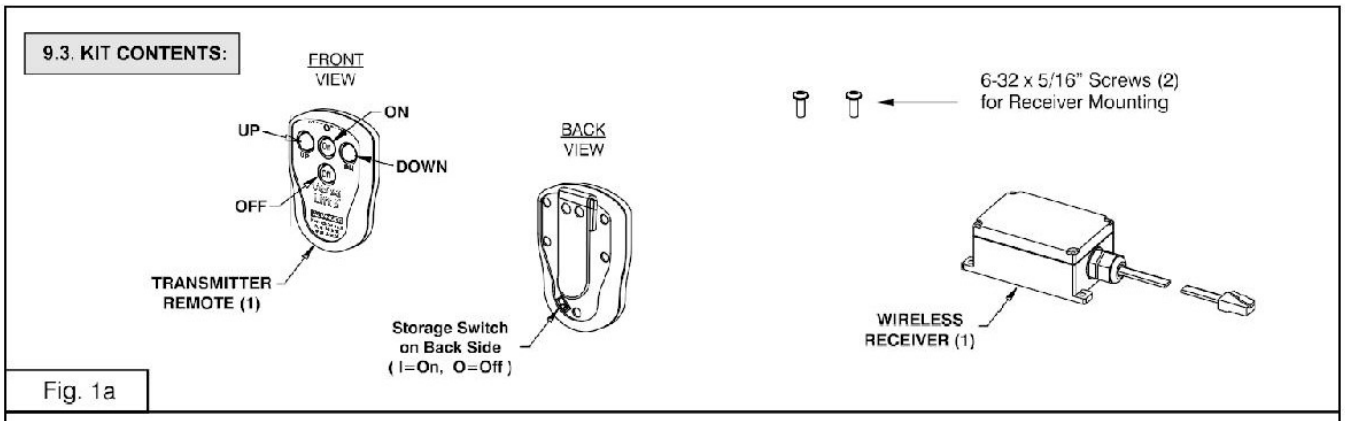

Fig. 1a

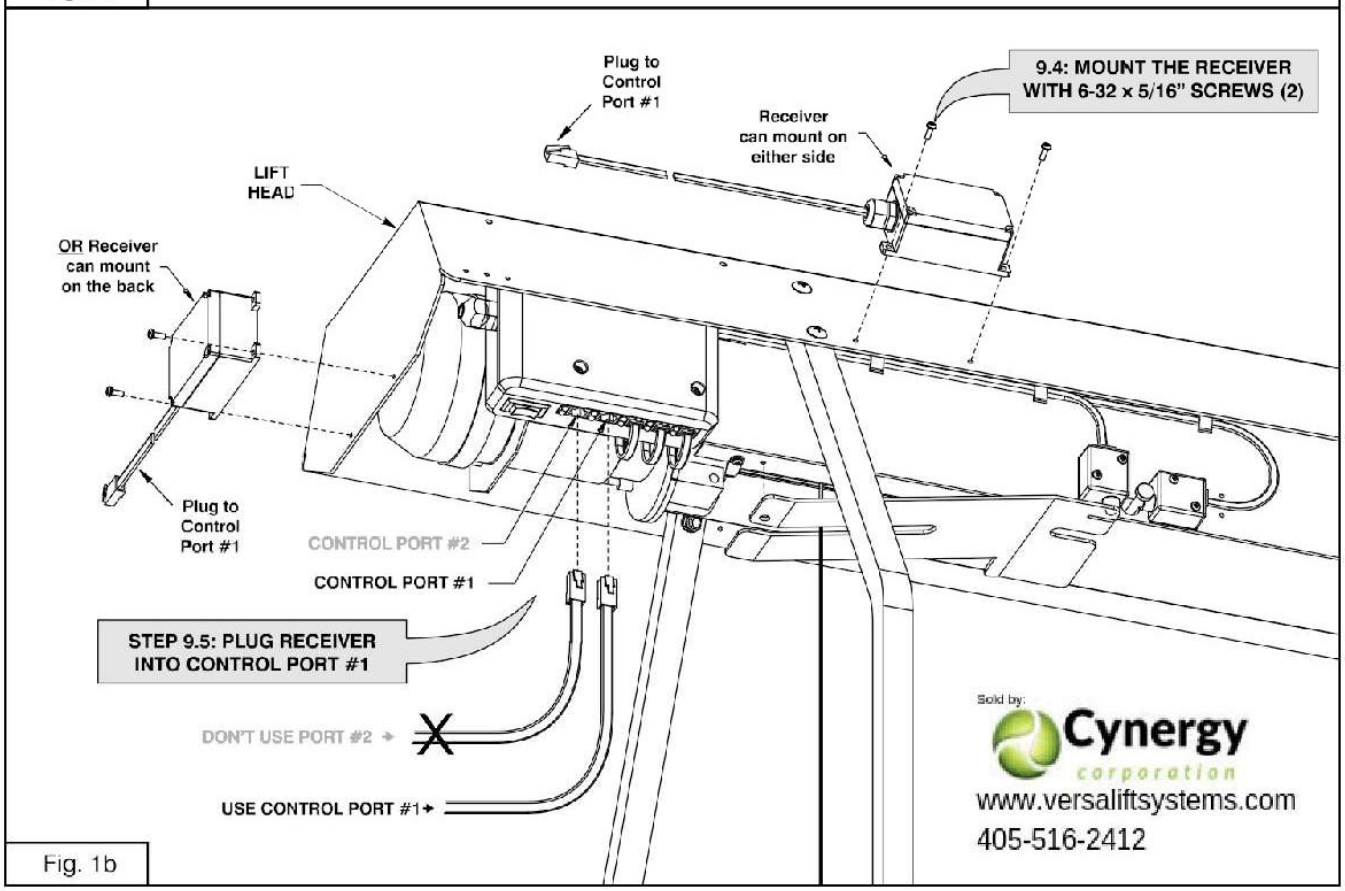

Fig. 1b

Versa Lift *Panther* Wireless Transmitter & Receiver

9.6. WIRELESS REMOTE OPERATION

The ***wireless receiver*** and ***remote transmitter(s)*** are **"paired"** together at the factory. Each transmitter transmits a unique code. Each receiver can be paired with multiple transmitters.

A storage switch on the back of the transmitter connects the battery when ON (I), or disconnects the battery when OFF (O). The front of the wireless remote has four momentary switch buttons. The middle two buttons turn the remote ON or OFF. When the ON button is pushed, the indicator will flash green. The transmitter turns off automatically when not used for 3-4 minutes.

The left button on the remote is UP. When the UP button is pressed, the cables will be wound up, raising the lifting platform to the highest position, where it will stop when it trips the upper limit switch. When the upper limit switch is tripped, the UP button on the remote will be disabled.

The right button on the remote is DOWN. When the down button is pressed, the lift cables will be wound out until the lifting platform contacts the lower floor surface and trips the lower limit switch that senses slack in the cables. When the down limit switch is tripped, the down button on the remote will be disabled.

Note: If your transmitter fails to operate the Lift:

- Check the Lift is plugged in and the power switch is ON and lighted.
- If you have two transmitters, one must be OFF when the other is ON.
- Check that the storage switch is set to ON (I).
- Check the ON button is pushed and the green indicator is flashing.

For dependability, install **new** AAA batteries every year (fresh from the store, not from a drawer!). Remove 5 screws on transmitter back to change batteries (see **Transmitter Back View** below.)

For more troubleshooting information, go to Section 13 on page 12 of the *Versa Lift Owners Manual* for more possible remedies.

9.7. PAIRING A TRANSMITTER TO THE RECEIVER

Each receiver ships already paired with a transmitter. The receiver can be paired with multiple transmitters. If you purchased a second transmitter after installing your lift, or replaced a broken transmitter, you will need to pair the new transmitter to the receiver.

Steps to pair a new or second transmitter:

! ***To pair a second transmitter, the first one must be turned off!*** !

STEP 1: Remove the screws and the cover from the receiver.

STEP 2: Set the storage switch on back of transmitter to ON **"I"**.

STEP 3: Press the transmitter **ON** button so green indicator flashes.

STEP 4: Press the **Function "F"** button for one second. One LED will light steady red. Then press the **Select "S"** button for one second. Five LEDs will light red showing receiver is now in "learn mode." (The receiver will stay in the learn mode for 10 seconds.)

STEP 5: Press the transmitter **"UP" and "DN"** buttons **at the same time,** and hold until the five LEDs flash twice showing the transmitter is paired with the receiver. Release the buttons and the LEDS will flash one more time to signal exiting the learn mode.

STEP 6: Test the operation to make sure the UP and DN buttons operate the lift in the correct directions.

STEP 7: If the lift operates correctly, replace cover and 4 screws. ***If the UP and Down buttons do not operate the lift correctly, you will need to repeat the pairing procedure steps 2 thru 7.***

NOTE: Only one transmitter can control the receiver at any given time. So, you must turn off the first transmitter to switch control of the receiver to the second transmitter.

TO CLEAR ALL PAIRINGS: Press the **"F"** button for 1 second then press the **"S"** button and hold it down at least 8 seconds (all LEDs will light, then go out). All transmitters are now erased from memory. Repeat steps 2 thru 7 above to re-pair each transmitter.

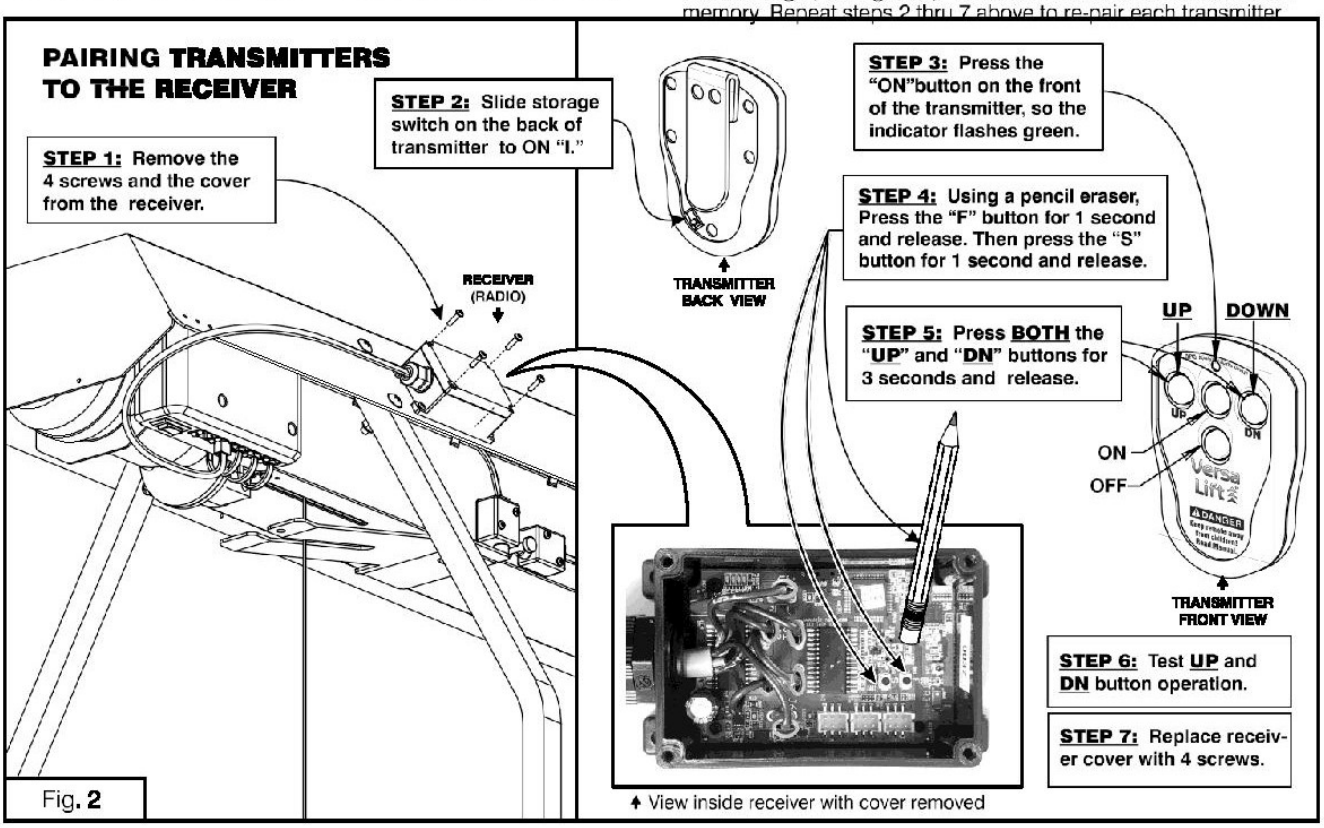

Fig. **2**