INSTALLER: Deliver this booklet to the Home Owner!

Versa Lift™

Attic Storage Lifting System

Protected By
US Patent8,418,814
US Patent8,851,238
US Patent8,702,069

INSTALLATION GUIDE

All Models 32

CONTENTS Page

Safety Facts 2
Overview..... 3
Electrical 4
Lift Opening Specs..... 4-6
Framing Techniques.... 7-10
Carton Contents 11
Assembly and Installation..... 12-19

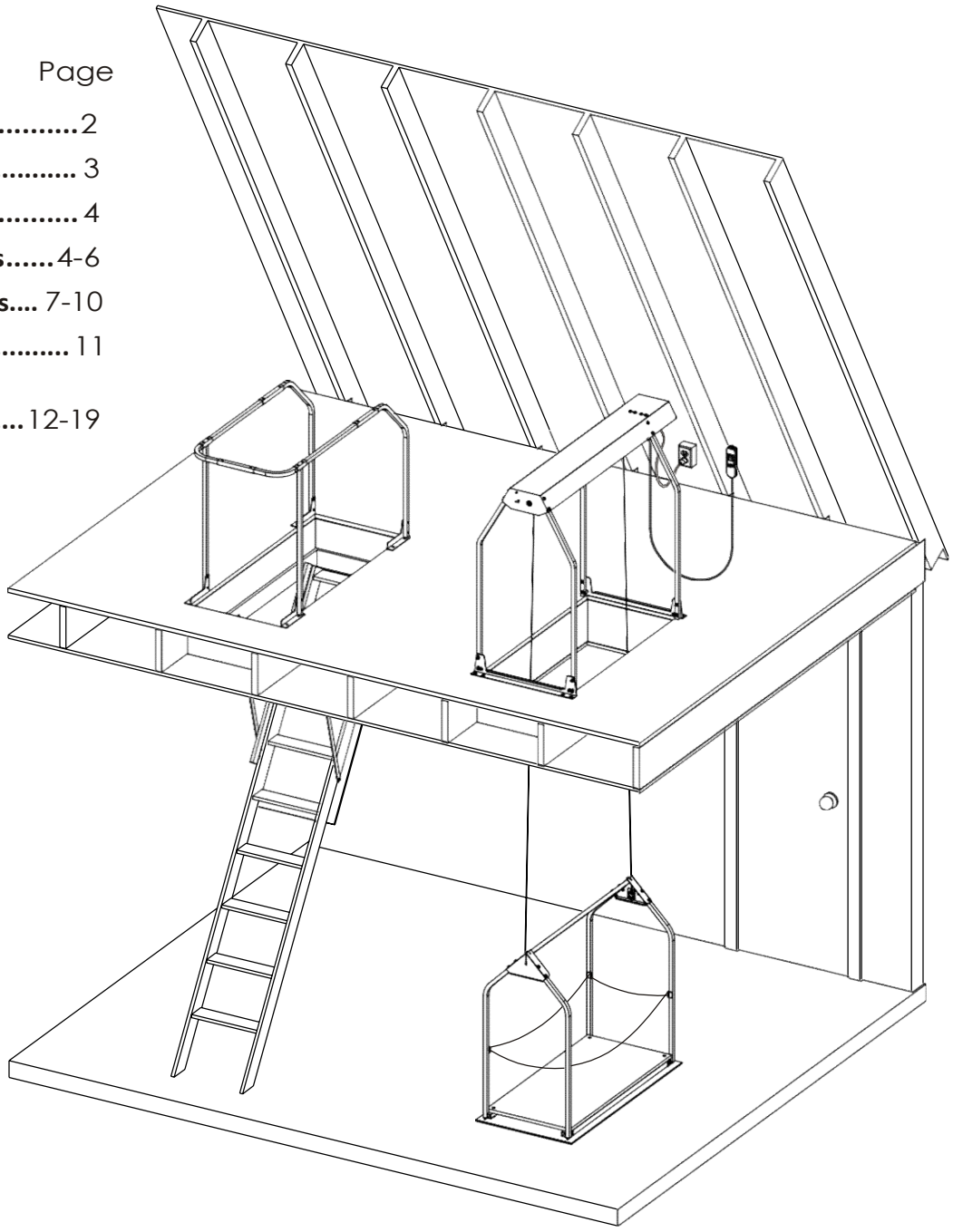

Sold by:
Cynergy corporation
www.versaliftsystems.com
405-516-2412

IMPORTANT! PLEASE READ YOUR OWNERS MANUAL!
The manual includes essential safety and maintenance information. Read manual before operating the Versa Lift!

Copyright © 2006 - 2019 BPG
All rights reserved.
Revised March 2019

READ THIS BEFORE INSTALLING THE VERSA LIFT

SAFETY GUIDELINES - DEFINITIONS:

It is important to read and understand this manual. The information it contains relates to protecting *your safety* and *preventing problems*. The symbols below are used to help you recognize safety information.

⚠ DANGER — **Indicates an imminently hazardous situation which, if not avoided, will result in death or serious injury.**

⚠ WARNING — **Indicates a potentially hazardous situation which, if not avoided, will result in death or serious injury.**

⚠ CAUTION — **Indicates a potentially hazardous situation which, if not avoided, will result in minor or moderate injury.**

⚠ DANGER **NEVER ALLOW PERSONS ON OR IN THE LIFT! NEVER SIT OR STAND ON THE LIFTING PLATFORM! ABSOLUTELY NO RIDERS! No person under 18 years of age should be allowed to operate this product. Children should be kept away from the lift when it is in operation. When not in use, lock the remote control and remove the key and store it where children cannot get it! This product can cause serious injury or death to a child who attempts to ride the lift or to lift others! When not in use, ALWAYS raise the lifting platform to the highest position and unplug the power cord to lift, lock the remote and store the key!**

⚠ WARNING **WHEN WORKING IN THE ATTIC, STAY ON DECKED AREAS. If you must enter non-decked areas, stay on joists. The materials between the joists will not support your weight and will collapse if you stand or sit on them. Be alert to overhead hazards, such as exposed nails. Be aware of and avoid openings, such as the ladder opening or the lift opening when you are working or moving around in the attic.**

⚠ WARNING **When working with power tools, follow all of the manufacturers safety guidelines and wear approved safety glasses and hearing protection.**

⚠ WARNING **DO NOT WORK ALONE IN A HOT ATTIC or if you have any health condition that could affect your balance, your mobility, or cause you to loose consciousness. If you have any diminished capacity, always work with another person in case you should need help. Don't work in the attic in the heat of the day. You can quickly be overcome by heat exhaustion in a hot attic in just a matter of minutes. Morning hours are the coolest time to work in the attic.**

⚠ WARNING **DO NOT OPERATE THIS EQUIPMENT IN DAMP, WET OR POORLY LIGHTED LOCATIONS or attic spaces and don't expose it to rain. Do not use this equipment in the presence of flammable gases or liquids. Keep the work area clear of obstacles, cluttered areas invite injuries. Use only correctly grounded power outlets or extension cords. Never operate equipment without grounding!**

NOTICE TO INSTALLER:

DO NOT OPERATE THE MOTOR UNTIL YOU ARE INSTRUCTED TO IN STEP 9 OF THIS GUIDE!

Doing so will cause the Versa Lift to malfunction and require re-calibration by factory or authorized dealer.

⚠ DANGER **TO REDUCE THE RISK OF ACCIDENTS, SEVERE INJURY, OR DEATH, ALL OPERATORS MUST READ AND UNDERSTAND THE OWNERS MANUAL COMPLETELY BEFORE OPERATING THIS EQUIPMENT!**

⚠ WARNING **FALLING HAZARD: The ladder opening and lift opening present falling hazards to any person who enters the attic. When you are in the attic space, be alert at all times to these openings. *We highly recommend you install a safety railing around your ladder opening, such as the Versa Rail by BPG* (see Fig. 0).***

⚠ WARNING **If you install this lift product inside the living space of a home, or in a closet, or a walk-in attic accessible to children, then you must also install the Auto-Shutter* from BPG that automatically closes the lift opening as the platform goes down to help prevent children, pets, etc. from falling through the opening (the Auto-Shutter is not illustrated in this manual).**

***For information on the Versa-Rail, Auto-Shutter, and other Versa Lift accessories visit* www.versalliftsystems.com**

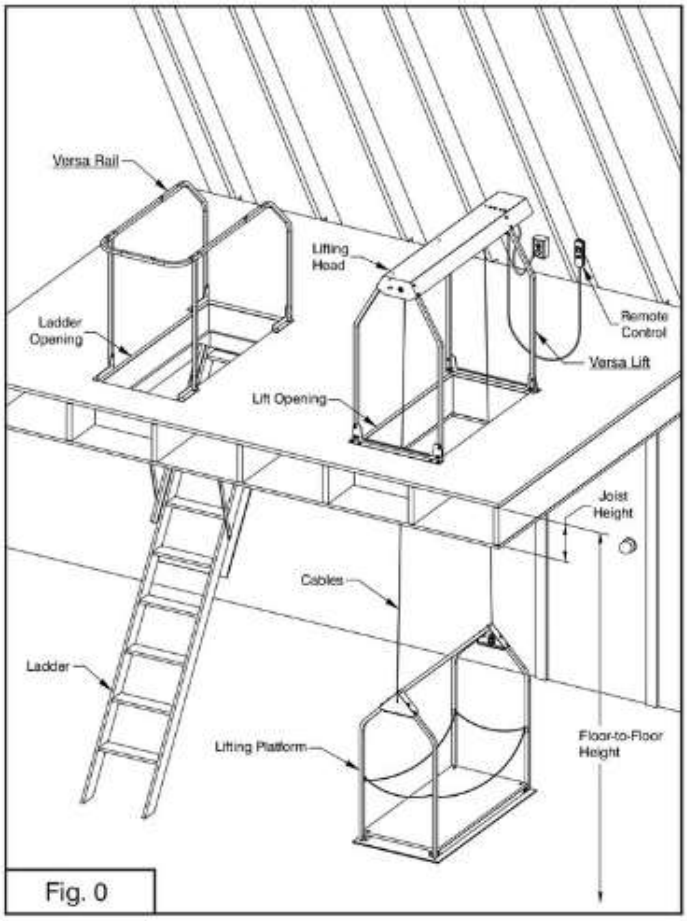

Fig. 0

BEFORE INSTALLING THIS LIFT:

Verify that this product and its installation does not violate local building codes. You can find out this information from a local building inspector, architect, structural engineer, or your building contractor.

Find out if there are any code restrictions on what types of things you can store in your attic.

Get professional advice and estimates on framing, decking and assembly if you are not qualified or physically able to do these tasks. You can find building contractors, remodeling contractors, architects, engineers and inspectors in the Yellow Pages.

You are responsible for determining the suitability of this product for your individual purposes, as well as installing it in a way that meets local building and safety codes.

⚠WARNING Two persons are required to perform certain tasks in this guide for safer and easier installation. Performing these tasks alone is not recommended.

VERSA LIFT SPECIFICATIONS:

General Specifications	(All Models 32)
Dimensions	34W x 69L x 60H
Vertical Attic Space Req'd.	60" Min.
Max. Joist Height	18"
Lift Opening Size	30.5 x 58.5"
Motor	0.6 hp
Voltage	120 VAC
Power	5 amps
Lift Capacity Max.	250 lbs.
Lifting Speed	8 in/sec
Duty Cycle (minutes)	2 on / 4 off
Lifting Cables (2)	.093 (7x19)
Shipping Wt. (approx)	220 lbs.

Model	Floor-to Floor
32	8-11 ft.
32H	11-14 ft.
32HX	14-17 ft.
32HXX	17-20 ft.

Control Options

Handheld Remote.....(keylock and 15-ft cord)
Wall Mounted Switch Set....(downstairs has keylock)
Wireless Remote.....(with powerful Radio Receiver)

Versa Lift
INSTALLATION OVERVIEW:

1. FRAME THE OPENING:

The first step to installing your new Versa Lift is preparing an opening in the ceiling where the lift will be located.

Tools/Materials Required: Saws, Drill-Driver, Hammer, Nails or Screws, Framing Square, Tape Measure, Header & Joist Lumber to match your existing joists.

Skill Level: ***Professional*** - Only attempt this part of the installation yourself if you are skilled in construction-type framing. If you are not, you should hire a Versa Lift dealer or a building/remodeling contractor to do this job for you. Before cutting any ceiling joist, consult a contractor or structural engineer to determine the best location to install your lift. Also, if your attic is not already decked, get some advice on the best areas to add decking in your attic for storage.

2. FLOORING AN ATTIC SPACE:

If your attic is not already floored in the area where your Versa Lift will be installed, then flooring material such as plywood must be added on top of the ceiling joists to make a floor that you can walk on and store items on.

Tools/Materials Required: Skill Saw, Hammer and Nails or Screws and Power Driver, Framing Square, Tape Measure, and Decking Material.

Skill Level: ***Handyman*** - If you have skill with general carpentry tools (sawing, measuring, nailing or screwing) and the physical strength to move large pieces of wood, then you can do this part yourself with a helper. **(**You can get 4 x 4-ft. or 2 x 8-ft. pre-cut plywood at most lumber stores. It is much easier to handle than 4 x 8-ft sheets.)

3. ASSEMBLE AND INSTALL THE LIFT:

The Versa Lift comes partially assembled. The cartons contain all of the parts and fastening hardware, along with detailed instructions in this guide for assembly.

Tools/Materials Required: A Power Drill-Driver, 5/32" Drill Bit, Phillips Driver Bit, Socket Driver Bit, Tape Measure, Square, Level, Phillips Screwdriver, 3/8" & 7/16" Wrenches, and 3/8" & 7/16" Sockets and Ratchet.

Skill Level: ***Handyman*** - If you have the skill for general repair and maintenance using hand tools and can read and follow instructions, then you can do this part yourself with a helper.

Versa Lift Opening Installation Specs

ELECTRICAL REQUIREMENTS:

ELECTRICAL OUTLET:

You will need a single 120 volt AC grounded electrical outlet to plug in the Versa Lift power cord. It is highly recommended that the outlet be on the same switched circuit as the lighting in your attic so that when the attic lights are turned off, the power to the Versa Lift is also turned off. This arrangement will be more convenient for you and will prevent unintended operation of the lift.

The power cord provided with this product has three blades. The longest blade is the grounding blade (Fig. 1a). The shorter flat blades are the current carrying blades. You will need a grounded power outlet (receptacle) as shown below (Fig. 1a). If your outlet does not have a grounded receptacle for a three blade plug or if you are unsure if your outlet is correctly grounded, have a qualified electrician check the outlet (receptacle) to make sure it meets local codes. Incorrect grounding puts you at risk of electrical shock. **Never modify the equipment plug to fit a two blade outlet (receptacle)!**

If you use an extension cord, it must be a heavy duty three-wire type with a three blade grounding plug and matching grounded outlet (receptacle) like those shown in Fig. 1a and rated for at least twice the load (10 amps minimum).

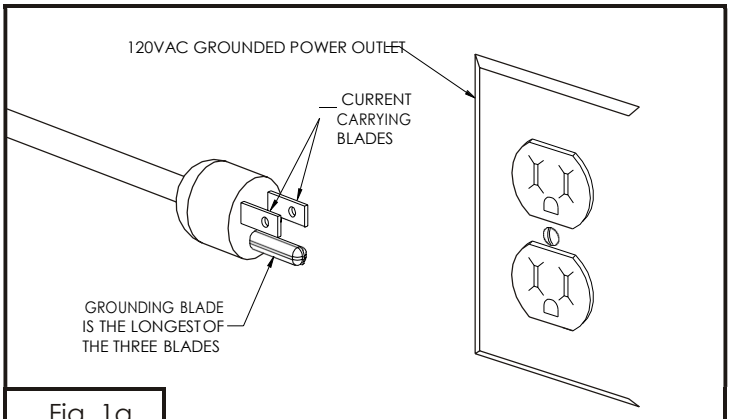

Fig. 1a

WARNING **To prevent unintended lift operation, you must turn the power switch off, unplug the power cord, or disconnect the power when not in use! The wireless model radio is active if the lift has power and is turned on and can operate the lift whenever a coded signal is received from the VersaLift remote control transmitter or from another transmitter in your area. Unintended operation can cause the lifting platform to move unexpectedly, possibly causing injury to persons or damage to property located directly under the lift.**

LIFT OPENING SPECIFICATIONS:

VERTICAL ATTIC SPACE:

The Versa Lift requires a minimum of 60" of vertical space directly over the lift opening (Fig. 1b).

OPENING DIMENSION & TOLERANCES:

The final opening size is 30½" x 58½" with a tolerance of +1/2" and -0" (the opening can be up to 1/2" larger, but no smaller.) The lift opening must be square as shown below (Fig. 1c). Diagonal A should equal B within 1/2".

LIFT OPENING FINISH:

The lift opening must have smooth, perpendicular side walls. **No nail heads, brackets, sheet rock or decking can protrude or extend into the opening,** as this will cause the lifting platform to become caught on those edges and the lift will malfunction. (See Figs. 2a, b, & c).

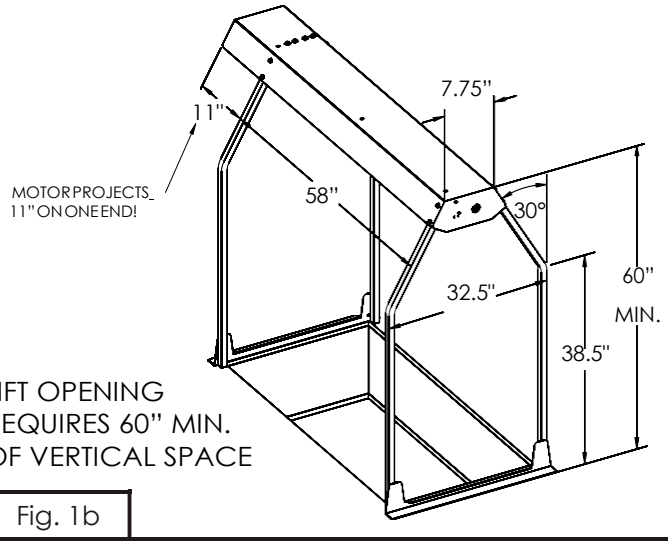

Fig. 1b

LIFT OPENING MUST BE SQUARE (A = B ± 1/2")

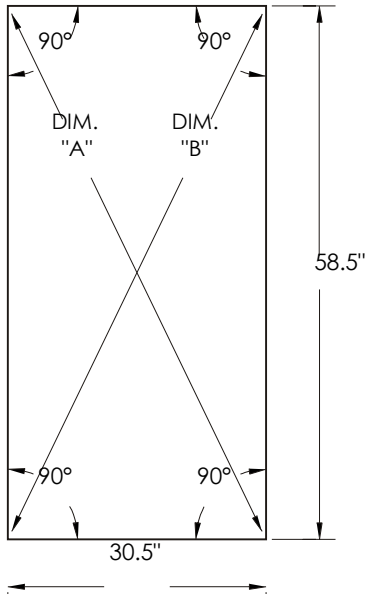

Fig. 1c

LIFT OPENING SPECIFICATIONS (Cont):

OPENINGS IN SOLID WOOD JOISTS:

When ceiling joists are solid wood, the finished opening must be **30½" x 58½" with smooth side walls.** The side walls must be square (perpendicular) so that the opening does not get smaller at the bottom. The sheet rock and decking must be cut flush to walls (see Fig. 2a).

There must be no protrusions inside the opening: All nail heads must be set flush or below the surface. If joist hanger brackets are used, the 2"x2" L-flashing (provided) must be installed in the corners of the opening to cover the hanger brackets and nail heads (see Fig. 2b below).

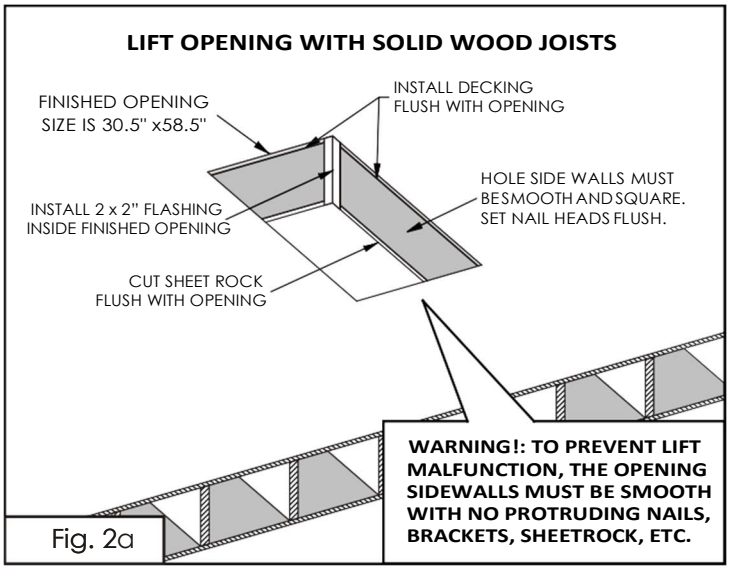

Fig. 2a

INSTALL 2 x 2" "L" FLASHING IN ALL OPENINGS:

2" x 2" "L" flashing is provided and should be installed into the corners of **all openings**, especially those having exposed joist hangers. **Any hanger brackets must be covered over as shown below.** Cut the flashing to the finished opening height (including sheet rock and decking). Align it to the bottom and nail both edges with #17 x 1" nails, placing nails within 1/4" from each edge(Fig. 2b & Inset). **The flashing strips are strongly recommended to finish all openings, even I-Joist openings that are paneled with 1/4" plywood.** The flashing strips not only cover nail head and brackets, they also provide a slippery protective surface to guide the lifting platform through the opening and will reduce paint wear on the lifting frame.

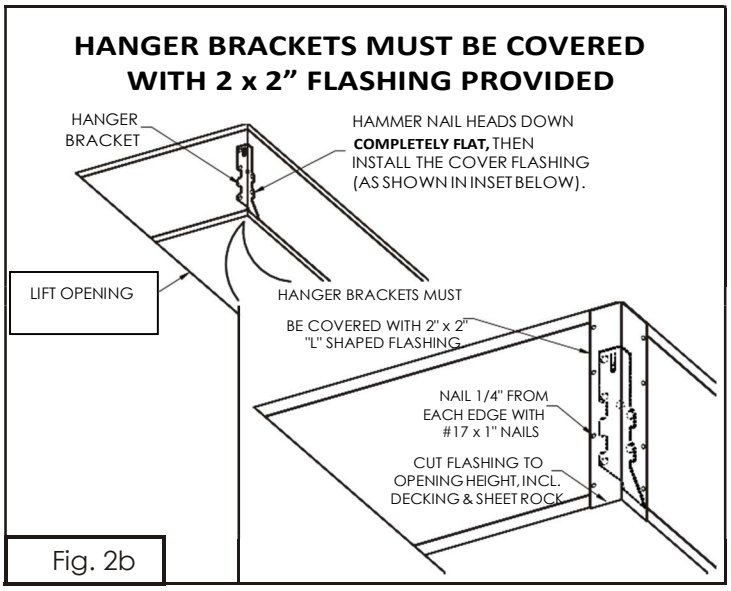

Fig. 2b

OPENINGS IN FABRICATED JOISTS:

When ceiling joists are "I-Joists" instead of solid wood, the rough opening size should be 31 x 59", ½" larger in each dimension, to allow space to panel the joists with 1/4" thick plywood (Fig. 2c). **The 1/4" paneling will provide the required smooth walls and cover any joist hanger brackets.** When paneled, the finished opening size will be 30½"x 58½". The side walls must be square (perpendicular) and all nail heads must be set flush or below the surface. Cut all sheet rock and decking flush with the edges of the opening. (See pgs. 8-10 on I-joists.) Install the 2"x2" L-flashing (provided) in the corners of the opening to cover nail heads and provide a smooth non-abrasive guide-way for the lifting platform (see Fig. 2b).

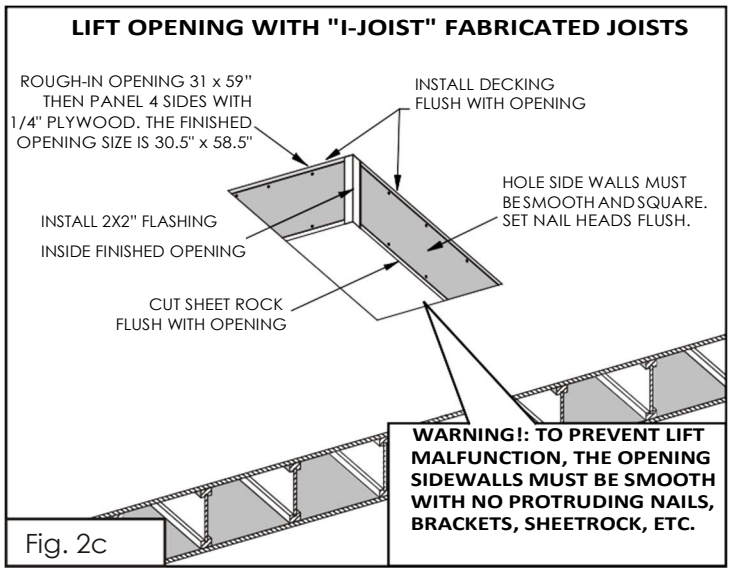

Fig. 2c

IMPORTANT NOTICE

WARNING THE LIFT OPENING MUST HAVE SMOOTH PERPENDICULAR SIDE WALLS. NO nail heads, hanger brackets, sheet rock or decking can protrude or extend into the opening, as this will cause the lifting platform to become caught on those edges, causing the lift to malfunction, resulting in possible damage or personal injury! Product warranty is void if this product is installed on an opening that does not meet the exact requirements detailed on these pages. Carefully read the instructions detailed and illustrated in "Lift Opening Requirements" and "Framing Techniques" (Fig. 1a thru Fig. 19, pgs. 4-10).

Versa Lift Opening Installation Specs

PILOT HOLES FOR MOUNTING THE LIFT:
Mark the location of the mounting holes on the floor deck at either end of the lift opening. These will be pilot holes for the lag screws that have been provided to secure the lift to the attic floor.

Mark the center of each side of the rectangular opening and use a straight edge or square to draw a center line (Fig. 3). Next draw a line parallel to the narrow ends of the opening and spaced 3/4" away. Measure along the parallel lines 14" each way from the center line and mark 2 hole centers (Fig. 3). Measure outward 2" more on each side for a total of 4 hole centers on each end of the opening (Fig 3). Find the "Mounting Rails" in the Versa Lift carton and place them over the hole centers you have marked to check your work. The hole centers should match the four slotted holes on the Mounting Rails. If so, drill 8 pilot holes with a 5/32" bit on the hole centers you have marked to a depth of about 2-1/2" (Fig. 3).

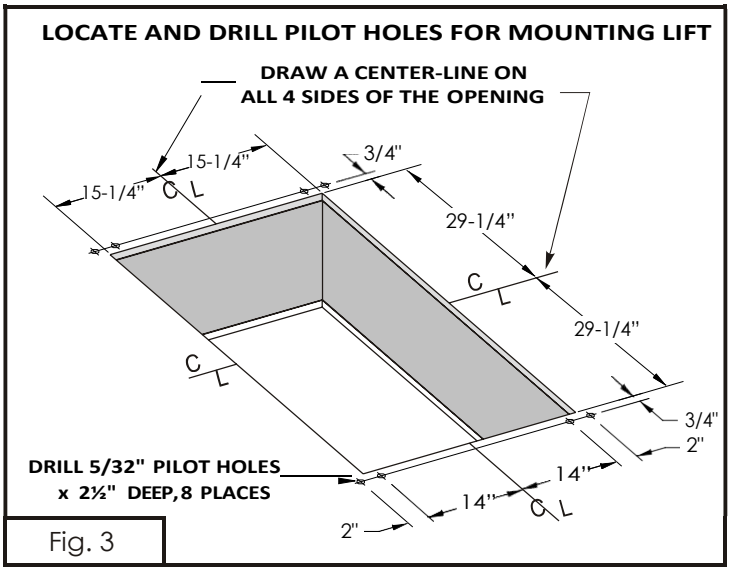

Fig. 3

IMPORTANT NOTICE ABOUT FRAMING:
The Optional Framing Techniques and Illustrations provided on pages 6 thru 10 are strictly for illustrative purposes and are not intended as recommendations or directions for you to follow in your individual installation. These are provided only as visual aids that may help you plan your installation with a professional, such as a structural engineer, architect, or contractor, according to local codes or building practices. BPG does not warrant this product to be suitable for your purpose, location, structure, installation or use. Each user is responsible for determining the suitability, appropriate location and method of installation for this product.

Please consult a professional to evaluate your ceiling construction and the desired location and whether the remaining joists should be doubled to compensate for the joist(s) that will be cut. This will depend on a various factors, including the size and span of the existing joists.

LIFT OPENING ORIENTATION
The following illustrations (pages 7-10) show lift openings in solid 2x (1½") lumber and I-joists spaced 16" or 24" on-center. All openings shown are ***aligned with the joists*** meaning the long dimension of the opening is oriented parallel to the joists so the fewest number of joists need to be cut. When the opening is ***aligned*** with solid wood joists on 16" or 24" centers or I-joists on 24" centers, only one ceiling joist has to be cut to frame the opening (see Fig. 4). For I-Joists on 16" centers, 2 joists may need to be cut (see page 8, for additional details).

In contrast, a ***transverse*** opening will require either two joists (24" centers) or three joists (16" centers) to be cut.

Important: For the above reasons, only ***aligned*** opening types are recommended for the Versa Lift Model 32. It is not recommended to orient the opening ***transverse*** (across) to the joist direction with the Versa Lift Model 32 because more joists will have to be cut which will weaken the ceiling structure more than an aligned opening.

ALIGNED OPENING IN SOLID WOOD JOISTS 24" O.C.

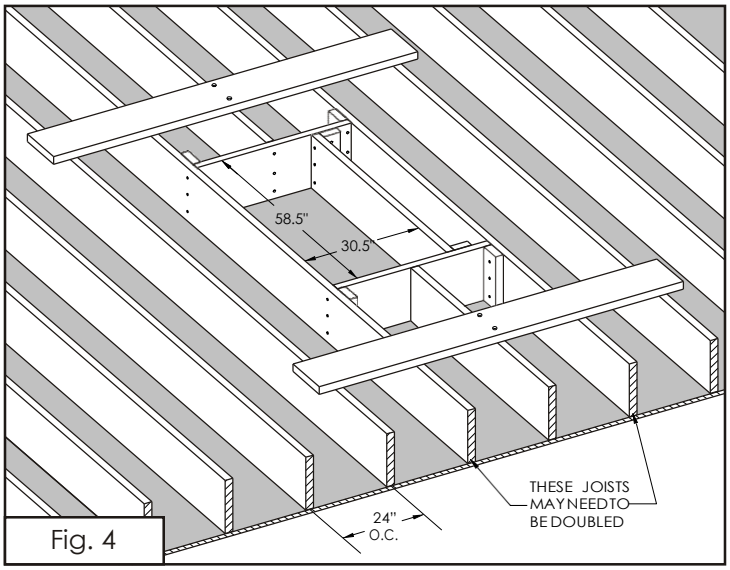

Fig. 4

Note: The framing technique illustrations (pg. 6-10) show blocking used to join joists and headers. Joist hanger brackets can be substituted for the blocking as desired. Depending on location and code requirements, web stiffeners may be required for I-Joist when using hanger brackets. Typical joist hangers are illustrated below:

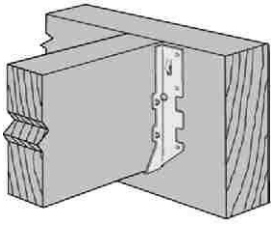
Solid Wood Joist Hanger

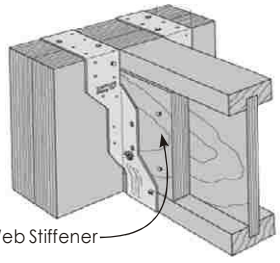

I-Joist Hanger

Optional Framing Technique #1 - For Homes with SOLID WOOD JOISTS 16 or 24" OC:
If your attic is decked, you will need to remove some decking to expose the joists in the area of the opening. If your attic is not decked, nail down some plywood on either side for a temporary work surface.

You will need temporary supports for any joist that will be cut. One technique is shown below using two 2 x 8" (minimum size) planks to span the adjacent joists. Each plank is secured with 2 lag screws to the joist(s) to be cut (Fig. 5). A framing square is used to mark guide lines for headers and cut lines (Fig. 5 inset). After cutting the joist, 2x4" or 2x6" blocking is installed (Fig. 6 & inset).
Note: Joist hangers can be used instead of blocking.

Mark, cut, and install headers:
For joists on 16" centers: Cut the headers 30.5" long (Fig. 7 & inset) and install them as shown.
For joists on 24" centers: Cut the headers 46.5" long and install blocking (Fig. 8 & inset). Install the headers. Trim the joist section (removed in Fig. 5) to 58.5" long and install it to finish the framed opening (Fig. 8).

Depending on the size and span of your joists, you may need to double the joists on either side of the opening for added strength as shown in Fig. 7. The sheet rock can now be cut flush with the opening. Install decking flush to the inside edge of the opening (not illustrated). Note that decking and sheet rock must not extend into the opening (see Figs. 2a & 2c on pg. 5).

Note: Joist hangers can be used instead of blocking. Joist hangers must be covered with 2 x 2" "L" flashing (provided) to prevent the lift platform from hanging in the opening, causing lift malfunction or damage (see Fig. 2b, pg. 5 for details).

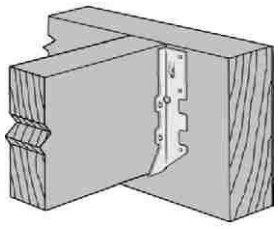

Solid Wood Joist Hanger

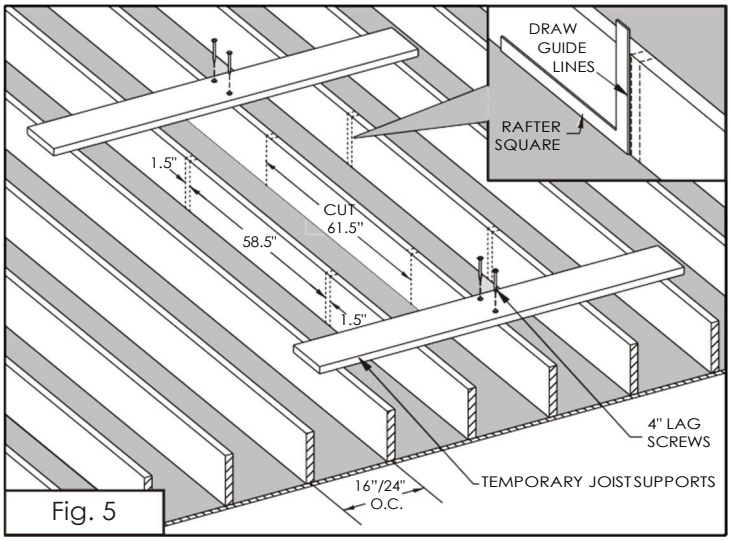

Fig. 5

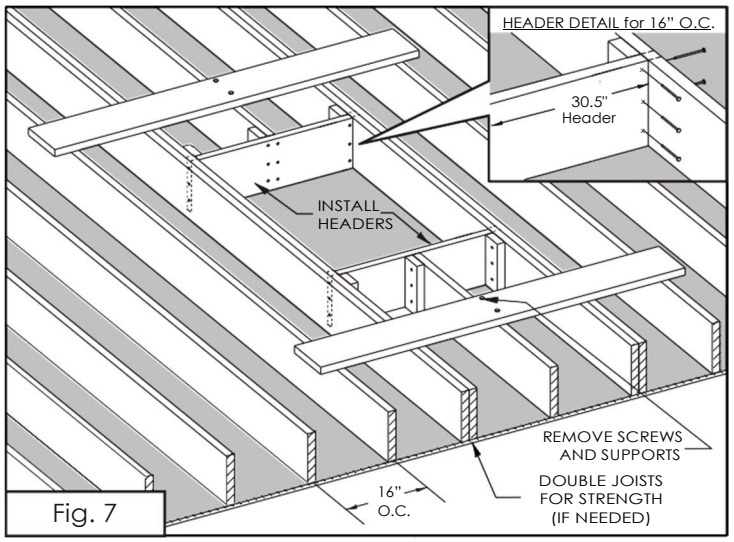

Fig. 7

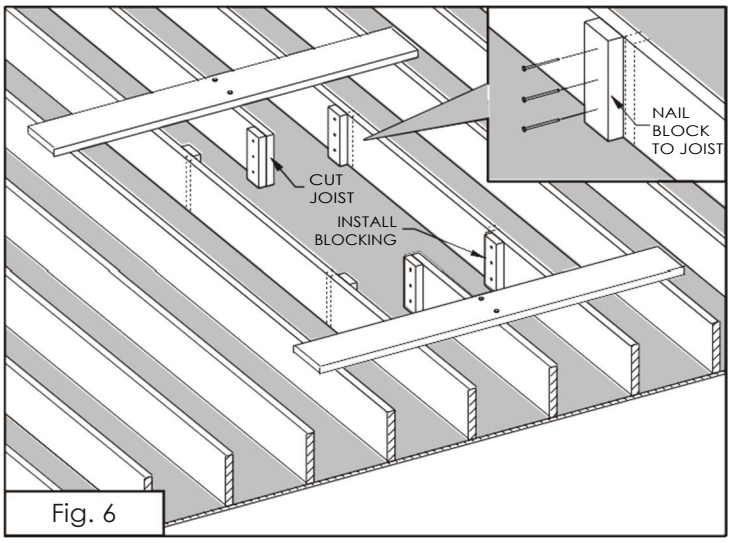

Fig. 6

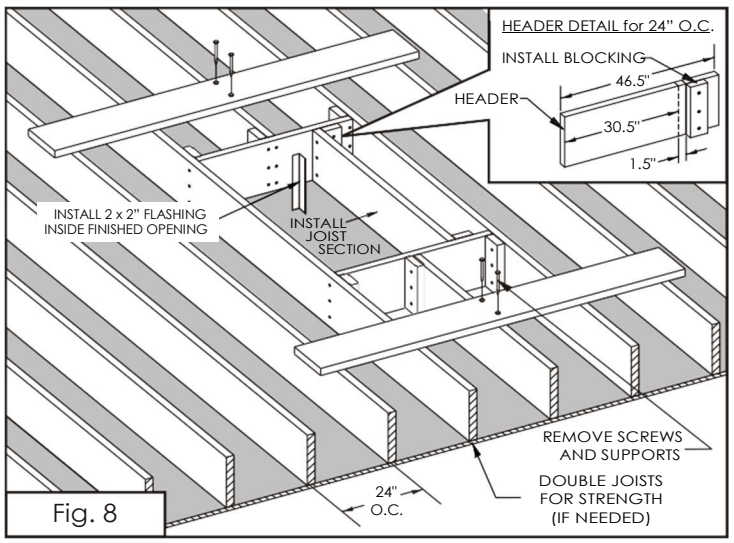

Fig. 8

Versa Lift Opening Framing Techniques

Optional Framing Technique #2 - For new home construction with I-JOISTS ON 16" CENTERS:

(This technique requires that you have additional I-Joist of the same size as that used in your ceiling. If you do not have additional I-Joist, see the technique on page 10.)

I-Joists differ from solid lumber in that the "I" shape beam is too narrow for "end nailing" when attaching one I-Joist perpendicular to the face of another. Furthermore, the face of an I-Joist is inset, making it less than an ideal surface to join something to. One way to address both problems is to install blocking on the ends of I-Joist sections and headers. For details about using blocking, see Figs. 14 & 17 on pages 9 & 10.

OPTIONS FOR FRAMING THE OPENING

Because I-Joists are typically 2.5" wide (solid wood joists are 1.5"), cutting one I-Joist only creates a rough opening of 29.5" when 31" is required (see Fig. 9). To resolve this problem, you must either set one joist off-center by 1.5" (see Fig. 10) -OR- you will need to cut two joists and install a stringer in order to get the required opening width of 31" (see Fig. 11). Note the rough opening must be 31" x 59" (½" oversize) so that it can be paneled with 1/4" plywood (see Fig. 12). After paneling the finished opening will be 58.5" x 30.5" with smooth sidewalls.

Note: I-Joist hangers can be used instead of blocking. Finish opening with 1/4" paneling to cover hangers and create a smooth-sided opening (Fig. 12), then install 2 x 2" flashing in every corner (Fig. 2b, pg. 5).

Depending on location and code requirements, web stiffeners may be required for I-Joist when using hanger brackets.

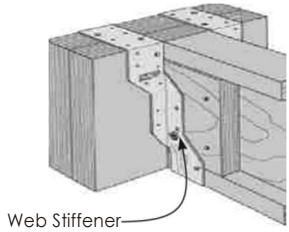

I-Joist Hanger

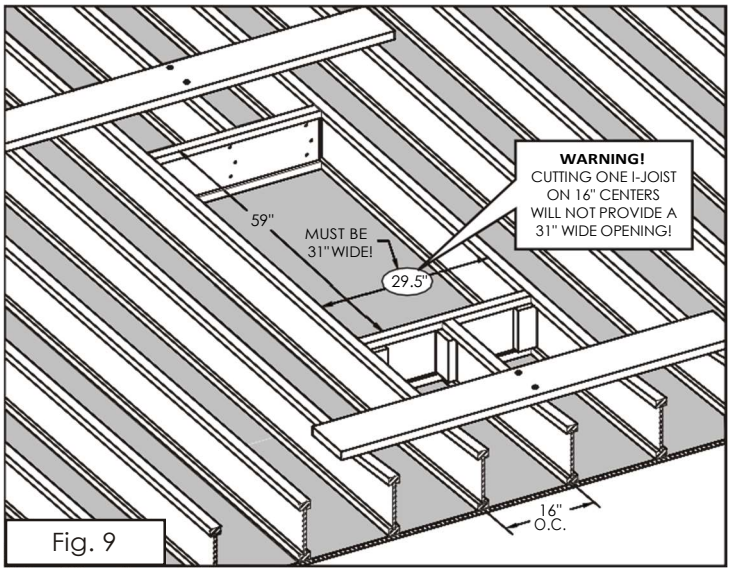

Fig. 9

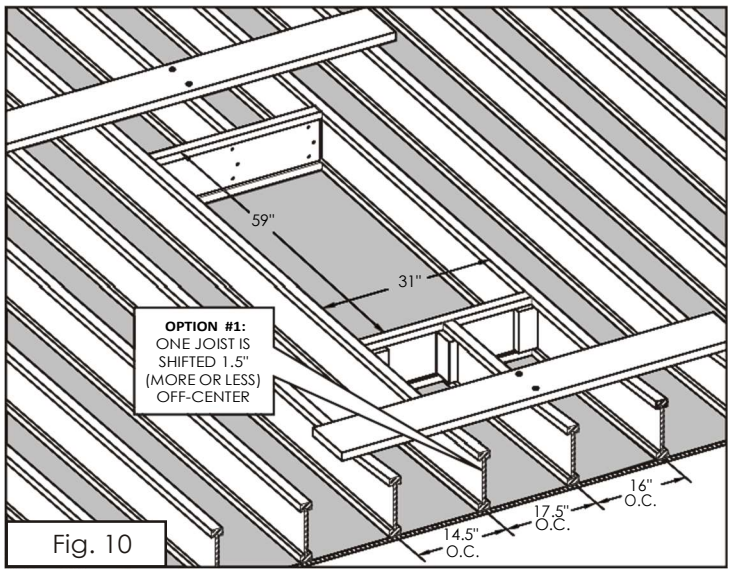

Fig. 10

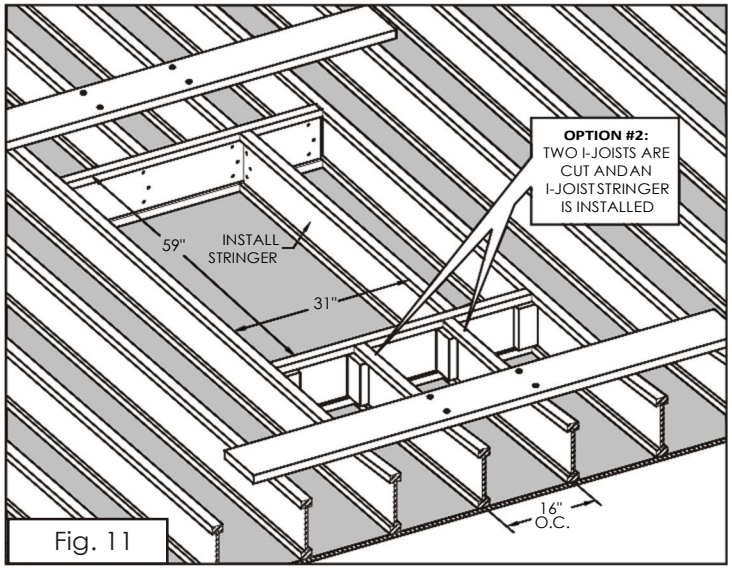

Fig. 11

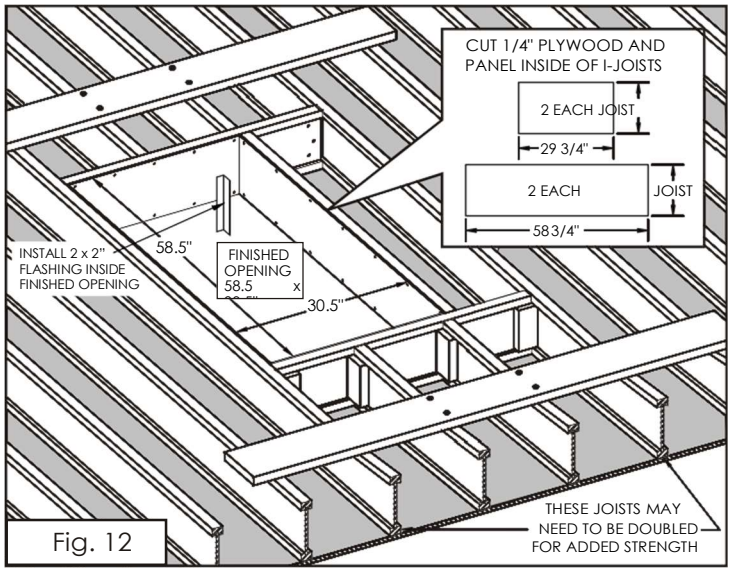

Fig. 12

Optional Framing Technique #3 - For new home construction with I-JOISTS ON 24" CENTERS:

(This technique requires that you have additional I-Joist of the same size as that used in your ceiling. If you do not have additional I-Joist, see the technique on page 10.)

I-Joists differ from solid lumber in that the "I" shape beam is too narrow for "end nailing" when attaching one I-Joist perpendicular to the face of another. Furthermore, the face of an I-Joist is inset, making it less than an ideal surface to join something to.

One way to address both problems is to install blocking on the ends of I-Joist sections and headers (Fig. 14): First, the block provides a thickness to the end of the I-Joist that can be nailed into. Second, the block is offset so that it fits into the inset in the face of the perpendicular I-Joist. The blocking should be attached securely (Fig. 14 inset) and placed on the side opposite the opening (the opening must not have anything projecting inward).

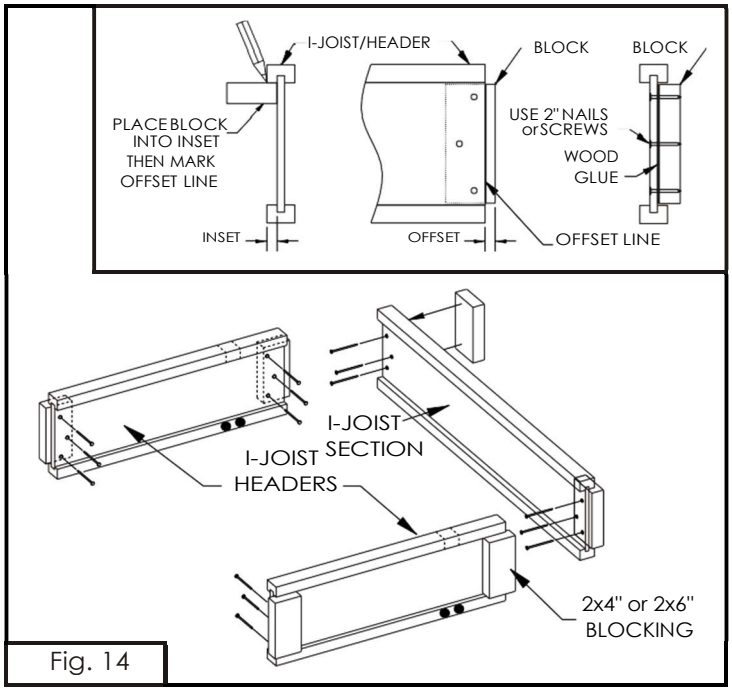

Fig. 14

Another problem with I-Joists is that the recessed face forms ledges that can hang-up on the lifting platform as it travels downward from the attic. To resolve this problem, the opening must be framed ½" oversized in each dimension to 59" x 31" (Fig. 15) so that 1/4" thick plywood can be cut (Fig. 16 inset) and used to panel all four I-Joist faces inside the opening to produce the final size opening of 58 ½" x 30 ½" (Fig. 16). Please note that any nail heads in the opening must be set flush or below the surface and decking and sheet rock must not extend into the opening (Fig. 2a & 2c on page 5).

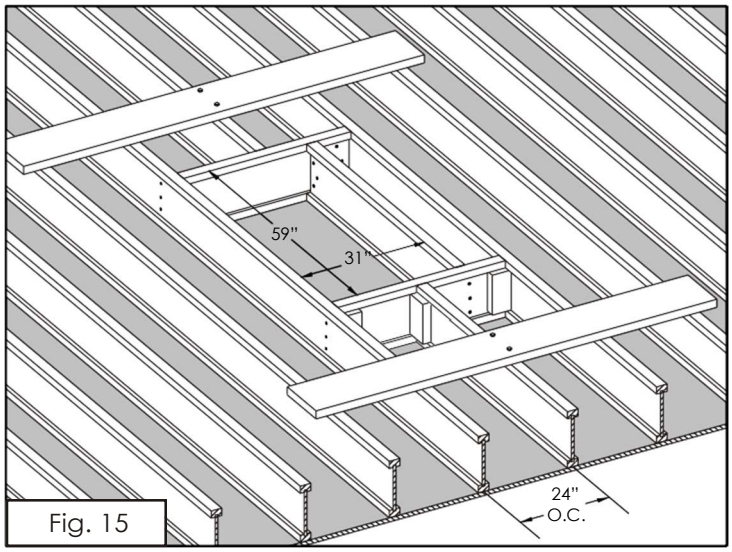

Fig. 15

NOTE: These illustrations show I-Joist on 24" centers, but this framing procedure can also be used for 16" centers (page 8). As with solid wood joists, I-Joists that need to be cut must be supported by some means until they are connected to headers that tie them to adjacent I-Joists.

Note: I-Joist hangers can be used instead of blocking. Finish opening with 1/4" paneling to cover hangers and create a smooth-sided opening (Fig. 16), then install 2 x 2" flashing in every corner (Fig. 2b, pg. 5).

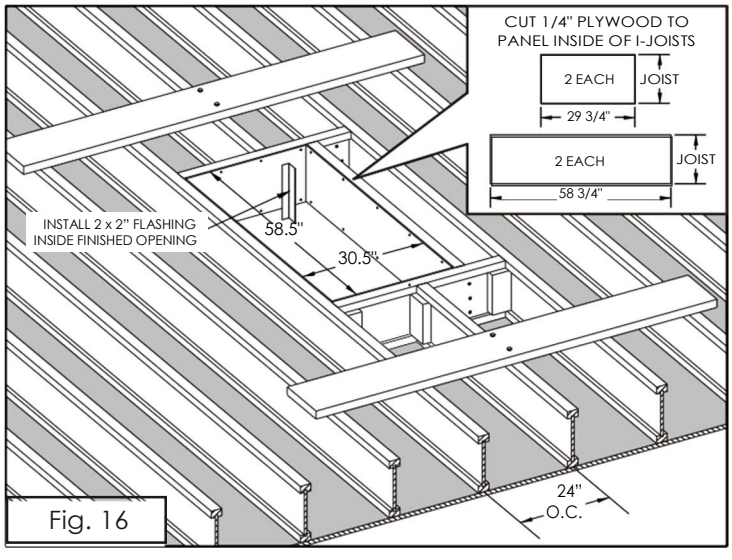

Fig. 16

Depending on location and code requirements, web stiffeners may be required for I-Joist when using hanger brackets.

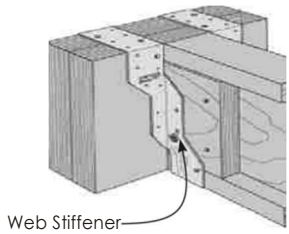

I-Joist Hanger

Versa Lift Opening Framing Techniques

Optional Framing Technique #4 - For existing homes with I-JOISTS: (How to Fabricate Headers for I-Joists)

The procedure is generally the same as with I-Joists on the prior page, but when the home is a finished construction (already built and owned) you may not have extra I-Joist pieces from which to construct headers. First you should check with local building supplies, but if you can't find the same size I-Joists used to build your home you may need a way to **construct headers from other available material.**

One way to address this problem is to construct headers from 3/4" plywood and 2 x 2" rails (Fig. 17). Join the rails to the plywood with wood glue and nails or screws. Then attach offset blocking (Fig. 17) as previously explained on page 9. Headers constructed this way will have good strength and have the advantage of a smooth face toward the opening. NOTE: The blocking is attached **flush with the ends** of the I-Joist Section when using constructed headers with a flat inside surface (Fig. 17).

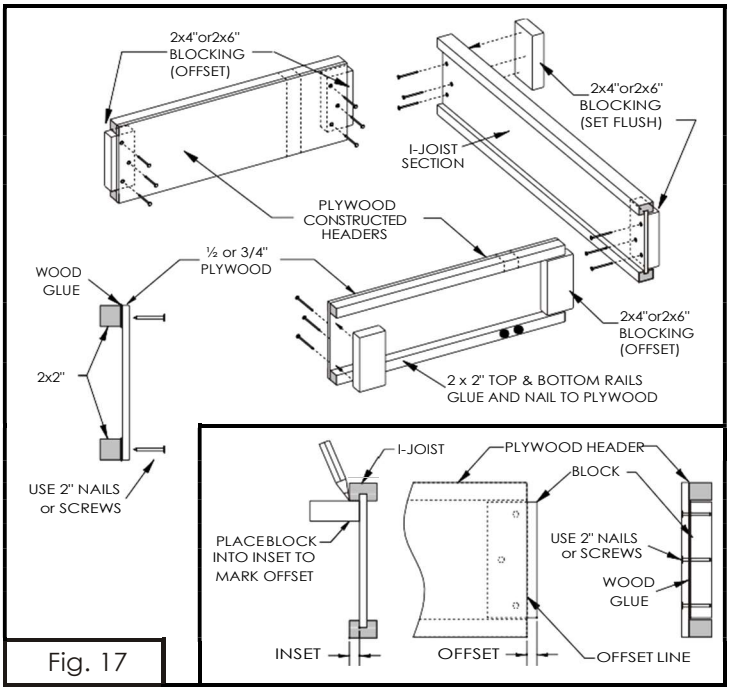

Fig. 17

The opening must be framed ½" oversized in only one dimension (58 ½" x 31") (Fig. 18), so that 1/4" thick plywood can be cut (Fig. 19 inset) and used to panel the two I-Joist faces inside the opening (Fig. 19) to produce a final opening size of 58 ½" x 30 ½" (Fig. 19). Please note that any nail heads in the opening must be set flush or below the surface and decking and sheet rock must not extend into the opening (Fig. 3).

NOTE: These illustrations show I-Joist on 24" centers, but this framing procedure can also be used for 16" centers (page 8). As with solid wood joists, I-Joists that need to be cut must be supported by some means until they are connected to headers that tie them to adjacent I-Joists.

Note: Joist hangers can be used instead of blocking. Finish opening with 1/4" paneling to cover hangers and create a smooth-sided opening (Fig. 19, then install 2 x 2" flashing in every corner (Fig. 2b, pg. 5).

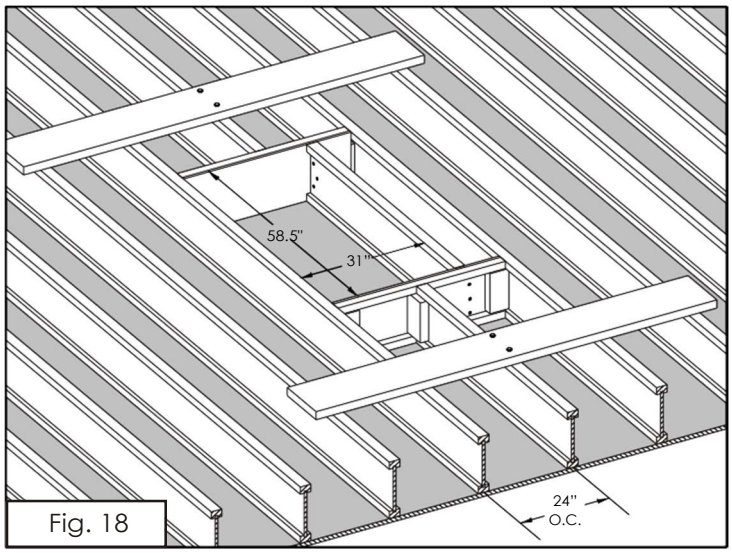

Fig. 18

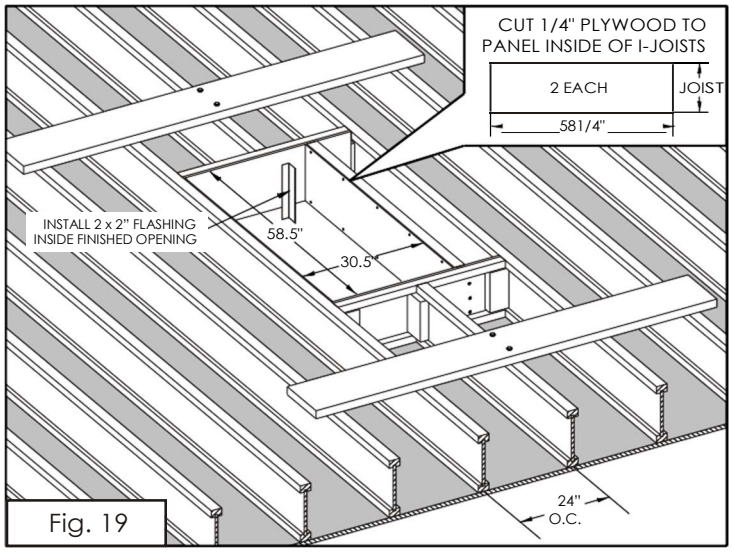

Fig. 19

Depending on location and code requirements, web stiffeners may be required for I-Joist when using hanger brackets.

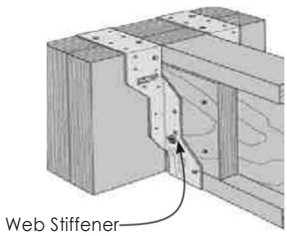

I-Joist Hanger

1. UNPACKING: **Save Carton #1! (You will need the two long lift housing cartons (overpack, telescoping box and foam blocks) for warranty repairs. So please save them!)** The Versa Lift is packed in three cartons. The carton contents are shown below in Fig. 20. The fasteners shown in Fig. 20 inset will be in a hardware bag (you don't need to count the hardware). Open the cartons and check the contents to locate all of the items in Fig. 20. Also, check the components in all three cartons for any damage. If any components are missing or damaged, do not proceed with assembly. Contact BPG to get needed replacements for any missing or damaged items.

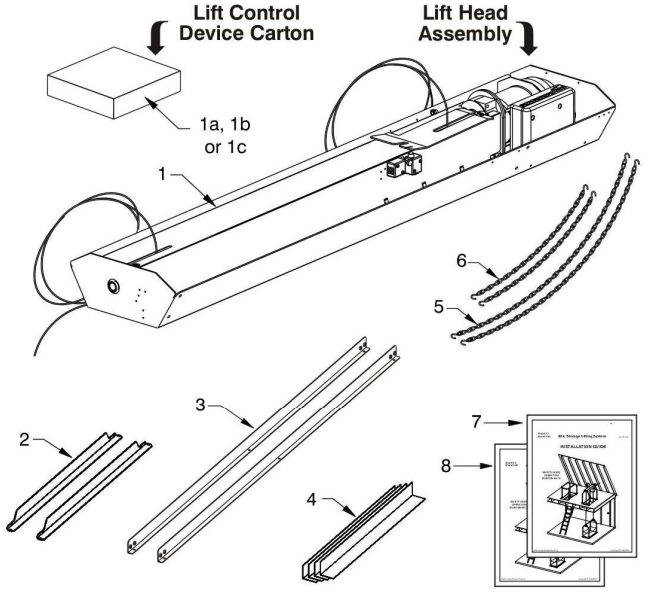

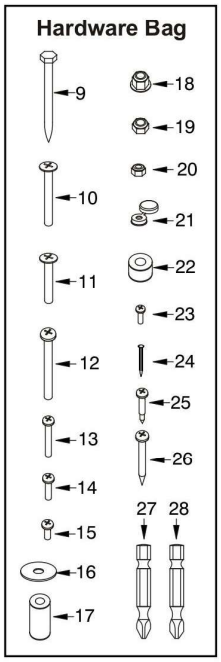

CARTON 1 CONTENTS:

1. Model 32 Lift Head Assembly (1)
   - 1a. Corded Remote Control or
   - 1b. Mounted Wall Switches or
   - 1c. Wireless Radio Control
2. Short Door Braces (2)
3. Long Door Braces (2)
4. 2 x 2" x 20" "L" Flashing (4)
5. Long Chains (2)
6. Short Chains (2)
7. Installation Guide (1)
8. Owners Manual (1)

Hardware Bag Contents:

9. ¼" x 2½" Lag Screw (10)
10. ¼-20 x 2" Phillips Truss Screw (5)
11. ¼-20 x 1½" Phillips Truss Screw (28)
12. ¼-20 x 2½" Phillips Pan Screw (5)
13. 10-32 x 1" Phillips Pan Screw (10)
14. 10-32 x 5/8" Phillips Pan Screw (10)
15. 10-32 x 3/8" Phillips Pan Screw (10)
16. ¼ x 1" Flat Washer (10)
17. ½ x 1" Nylon Guide Spacer (10)
18. ¼-20 Tall Flanged Locknut (44)
19. ¼-20 Short Locknut (5)
20. 10-32 Locknut (10)
21. Screw Cover (10)
22. 1/2 x 3/8"Cable Clamp Spacer (12)
23. 6-32 x 5/16" Phillips Screw (5)
24. #17 x 1" Flashing Nails (50)
25. #8 x ½"Phillips Pan Drill-Point Screw (5)
26. #12 x 1" Phillips Pan Head Screw (15)
27. #2 Phillips Driver (for 6-32 &10-32)
28. #3 Phillips Driver (for 1/4-20 screws)

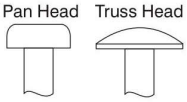

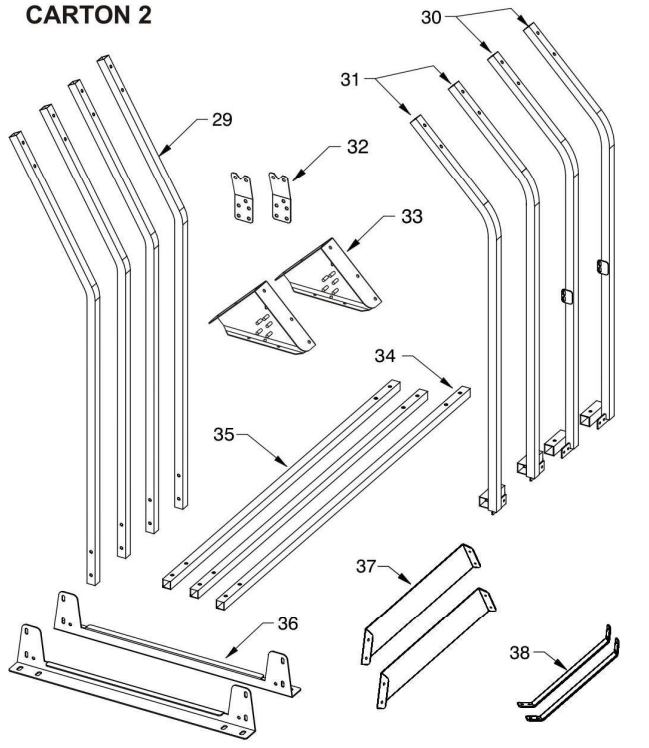

CARTON 2 CONTENTS:

29. Lift Housing Legs (4)
30. Right Platform Legs (2)
31. Left Platform Legs (2)
32. Cable Clamps (2)
33. Platform Leg Brackets (2)
34. Platform Top Brace (1)
35. Platform Supports (2)
36. Mounting Rails (2)
37. Housing Leg Braces (2)
38. Housing Leg Stabilizers (2)

Note: Hardware Bag contains extra pieces of hardware. Not all hardware will be used during this assembly.

CARTON 3 CONTENTS:

39. Platform Panel (1)
40. Door Panel (1)

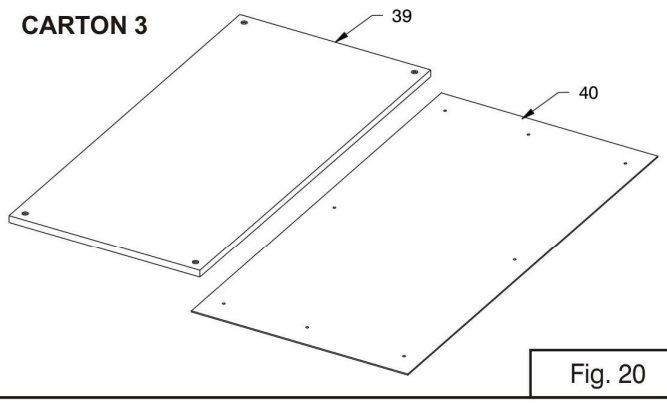

Fig. 20

Versa Lift Installation - Assembly (All Models)

2a. LIFT HEAD ASSEMBLY - Using the *Rope Handles* provided, move the Lift Head into the attic for assembly.
Warning! **Heavy!! This job requires two able persons.**
(After the lift head is in the attic, untie the rope handles and save them.) Locate the other parts shown below and move them up to the attic for assembly to the Lift Head.

2b. INSTALL THE HOUSING LEGS
Assemble the four lift housing legs into the lift housing as shown. **The locknuts will not work loose, so don't over-tighten or you will collapse the square tubing. Note: The legs must fit to the INSIDE of the lift housing (see inset).**

2c. INSTALL THE MOUNTING RAILS
Assemble the mounting rails onto the lift housing legs, as shown, but do not tighten them yet. Leave them slightly loose for leveling adjustment Step 4.

2d. INSTALL NYLON GUIDE SPACERS
Install two nylon spacers with a 2½" screw and locknut to the mounting rails in four places (by each leg) as shown below. Tighten them snug, but do not over-tighten.

⚠CAUTION **DO NOT RUN the Lift motor until this manual tells you to! THE LIFT WILL MALFUNCTION IF YOU DO!**

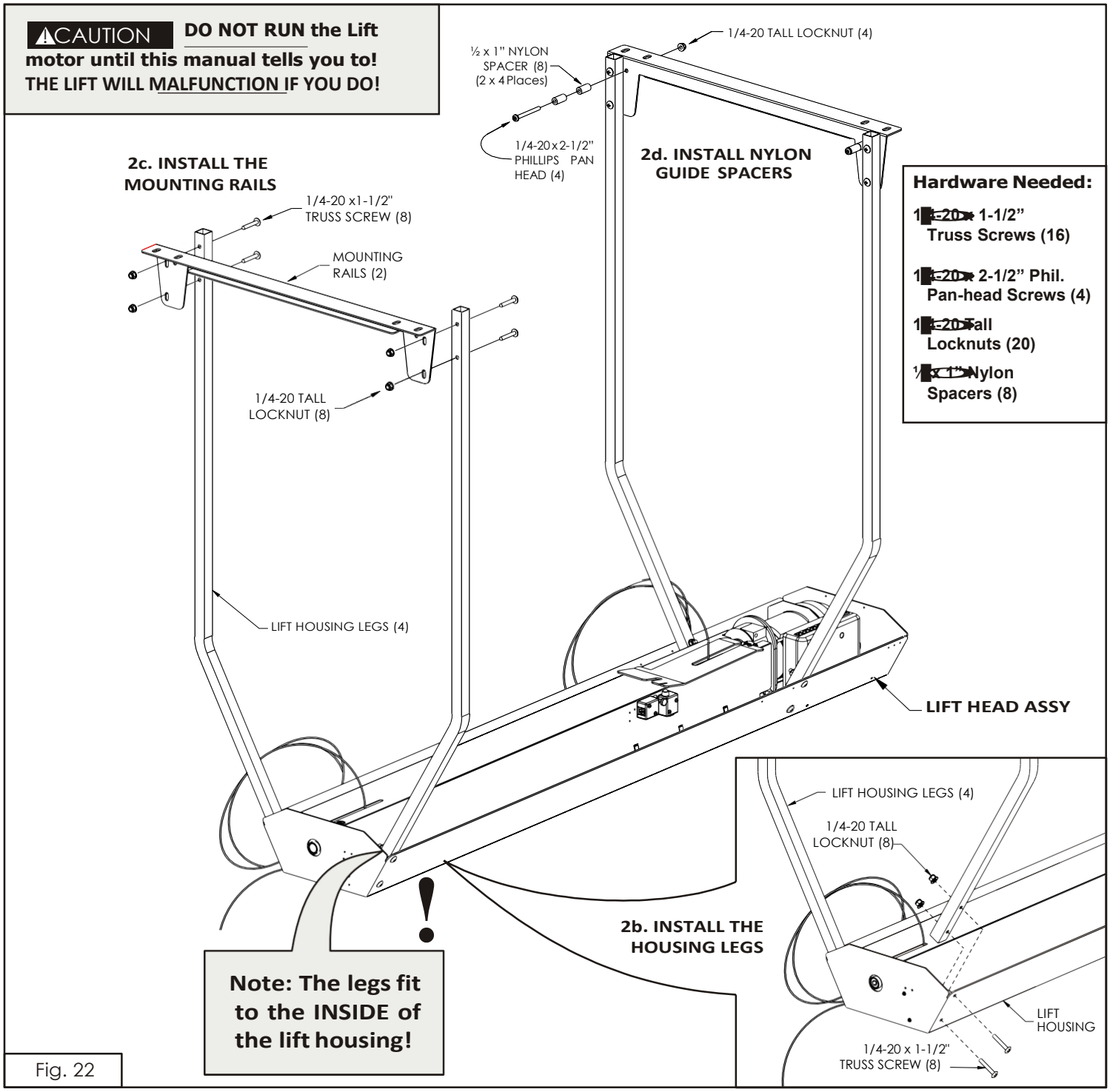

Fig. 22

3. INSTALLING THE LIFT HEAD

This step requires two persons. Turn the lift head assembly upright and position it in front of the opening (Fig. 23). With one person on each end, lift slightly and move the assembly over the opening (Fig. 23) and align the slots in the mounting rails with the pilot holes in the decking. Install the 8 lag screws and 1" diameter washers into the pilot holes and screw them down until they almost contact the mounting rail, but leave them loose so the mounting rails can be adjusted later (Fig. 23 inset). (Note: A couple of drops of dishwashing liquid in the pilot holes will make installing the lag screws easier.)

4A. LEVEL THE LIFT HEAD

The screws that hold the legs to the mounting rail must be loose for this step. Place a bubble level lengthwise on the housing and see if head is level (Fig. 24). Place shims under both legs on the low end (Fig. 24 bottom inset). Adjust the shims until the head is level, then tighten all 8 leg screws (Fig. 24 bottom inset). Remove the shims.

4B. INSTALL THE HOUSING LEG BRACES

Install the housing leg braces (2) using the self-drilling drill-point screws (8) as illustrated (Fig. 24 inset).

NOTE: Install the braces on the OUTSIDE surface of the housing legs, NOT on the inside! If braces are installed on the inside, they will interfere with the lifting platform, causing the lifting platform to become jammed!

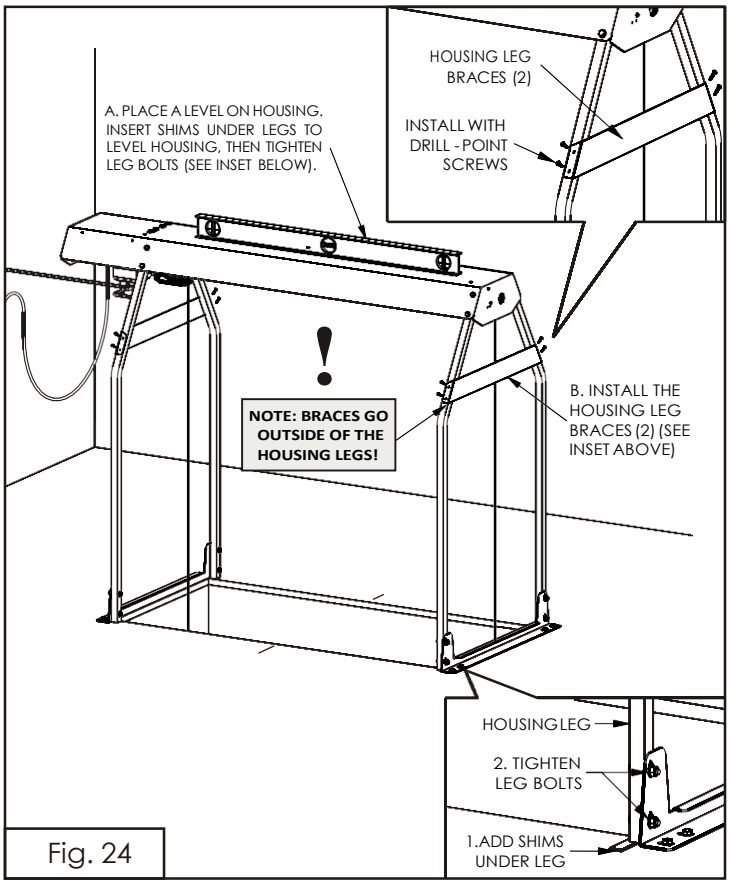

Fig. 24

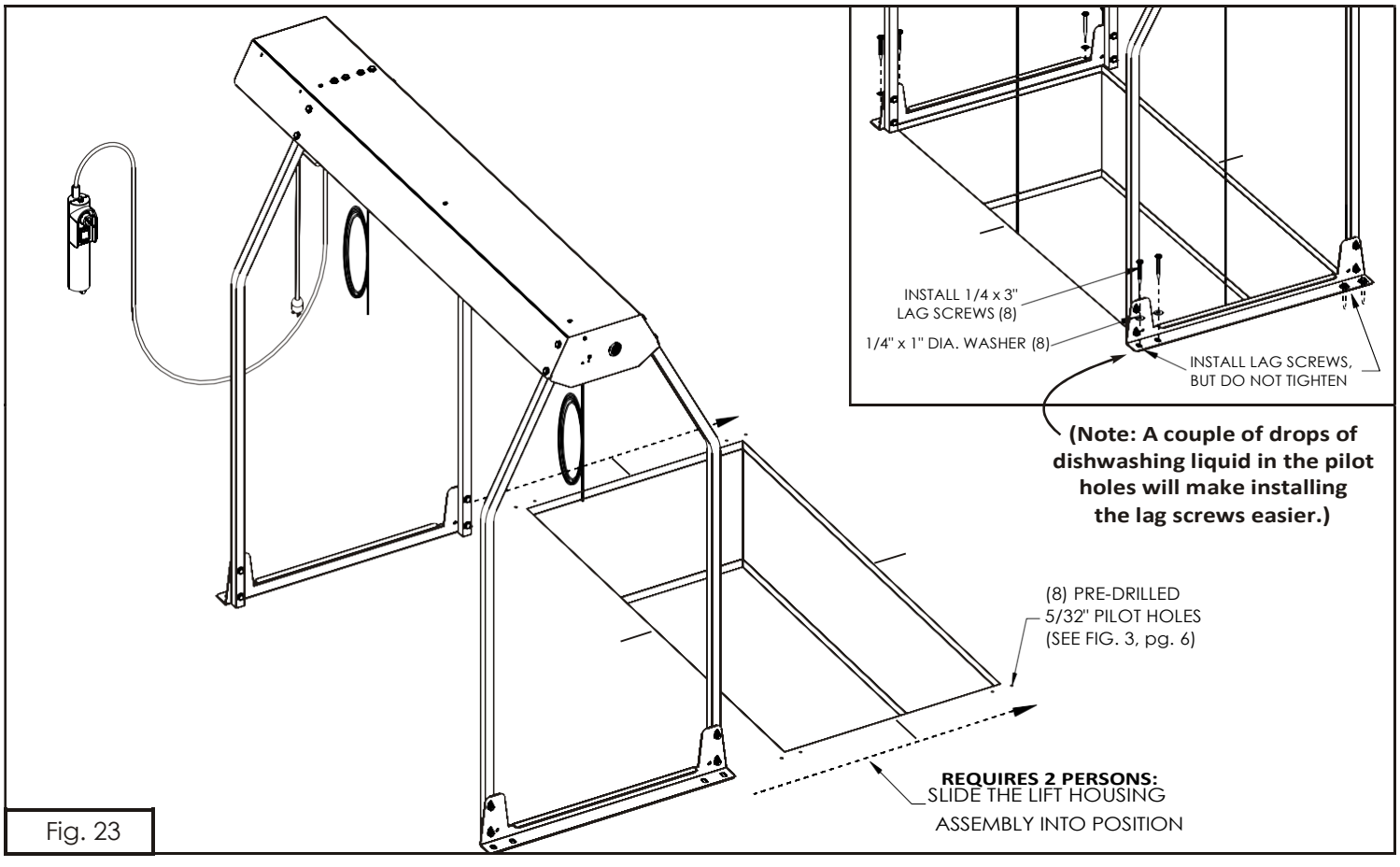

Fig. 23

5. DOOR ASSEMBLY

Assemble the door down-stairs. Locate the door, door braces, and fasteners shown in Fig. 25. Insert each screw through a screw cover, the door panel, then the door braces (see Fig. 25 inset). Note: Insert a 1/4 x 1" spacer washer under the center holes on the short braces as illustrated below.

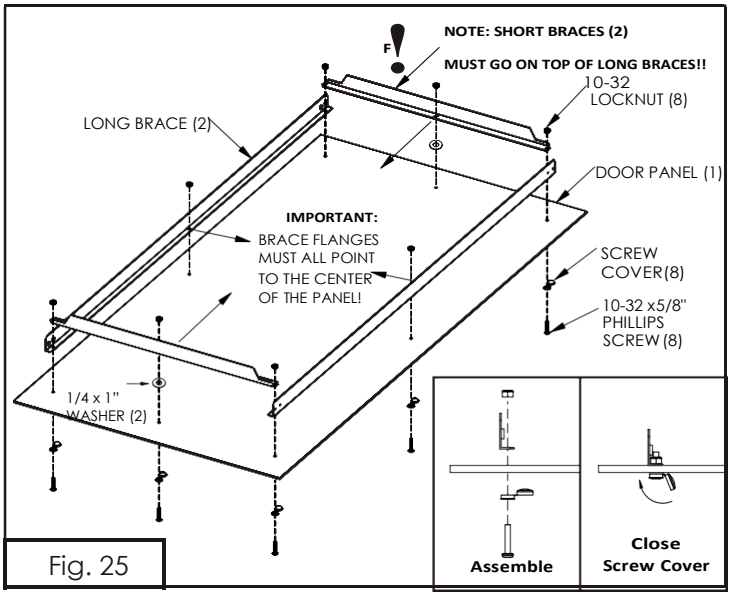

Fig. 25

IMPORTANT: Assemble all braces with small flanges pointing toward the panel center. Short braces must go on top of long braces. Fasten each screw with a locknut and tighten all 8 screws. Close the screw covers. Make sure they snap completely shut (Fig. 25 inset).

6. PLATFORM ASSEMBLY

The platform must be assembled down-stairs. Locate the platform, 2 platform supports, 4 platform legs, ¼-20 x 2" truss screws, and **short** locknuts (Fig. 26). **Note: The platform <u>top side</u> has warning labels.** Insert the platform support into one of the left legs as shown (Fig. 26 inset). Align the hole in the leg with the hole in the outer end of the support. Next insert a ¼-20 x 2" screw down through the platform, leg and support (Fig. 26). Secure screw with a **short** locknut, but do not tighten until all four screws are installed. When all legs are assembled as shown in Fig. 26, tighten all of the screws and locknuts, but do not over-tighten or you will collapse the tubing.

Locate the platform leg brackets, platform top brace, and fasteners shown in Fig. 27. Install each bracket with 4 truss screws and **tall** locknuts (Fig. 27 inset). Tighten as above. Install the platform top brace with 2 truss screws and **tall** locknuts (Fig. 27). Tighten fasteners as above.

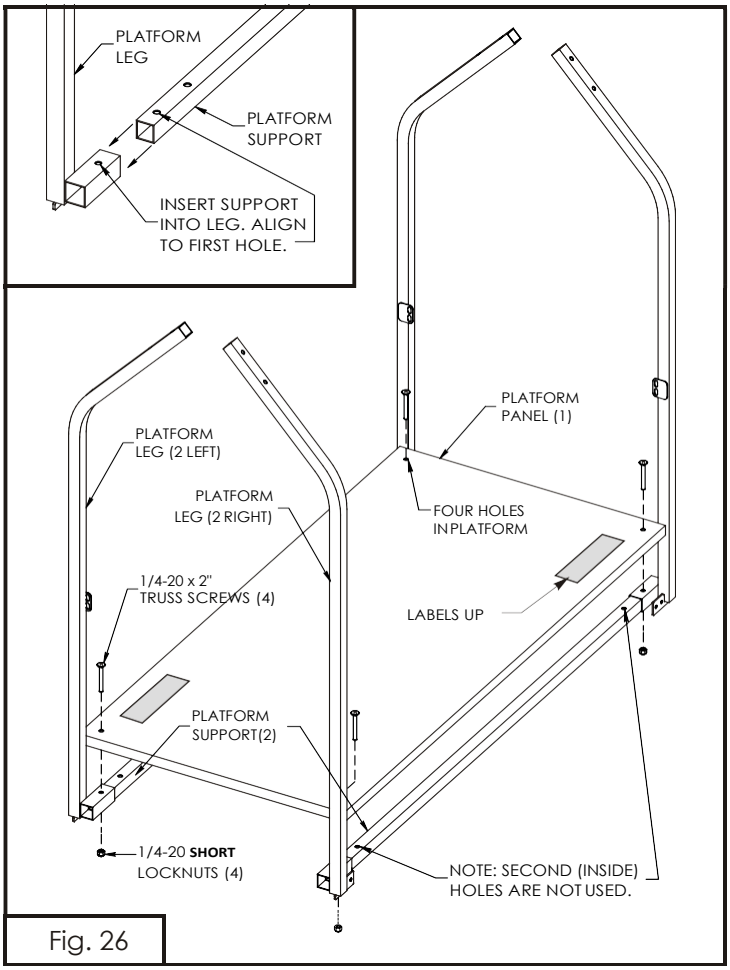

Fig. 26

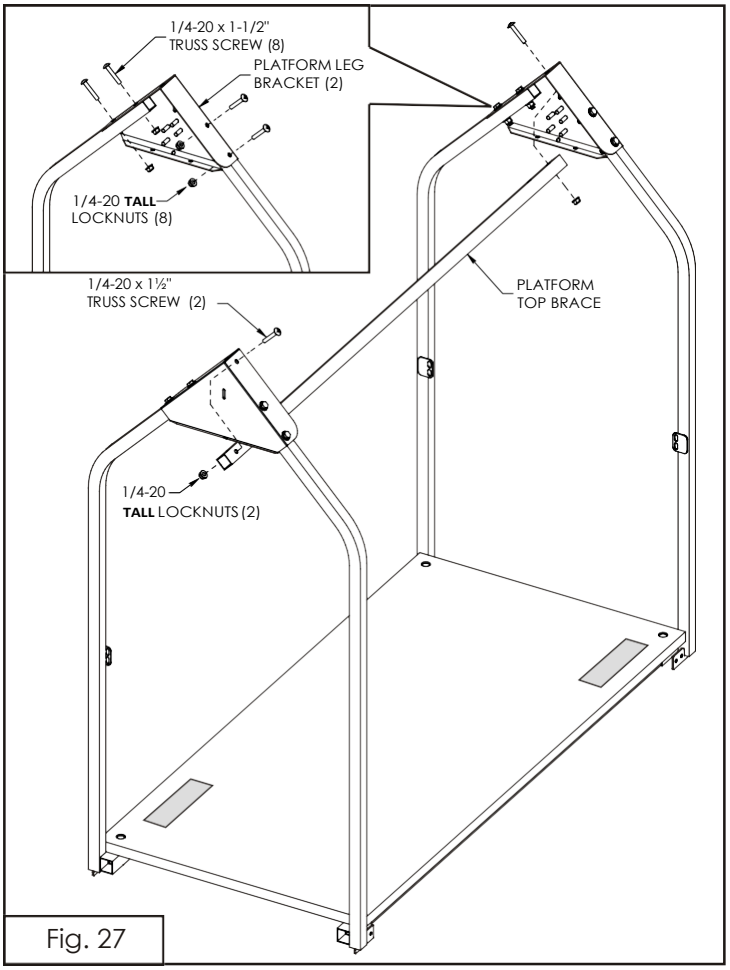

Fig. 27

7. DOOR AND PLATFORM ASSEMBLY

7-1. Locate the (8) 10-32 x 3/8" screws. Lift the platform assembly onto the door assembly (Fig. 28).

Note: The spring brackets on the end of the platform legs fit outside of the door braces (Fig. 28 inset).

7-2. Install and tighten the screws through the spring brackets and into the door braces.

7-3. Locate the short and long chains. The last link on each end of each chain is open to form a hook. Hook the end of each chain onto the chain brackets on each platform leg (Fig. 28 and inset). You can open the hook further with pliers, if needed, to make it easier to hook.

7-4. Close the hooks on both ends of the short chains so the chain is secured to the chain brackets. Close one hook on each long chain, leaving the other ends open for loading the platform.

Refer to the Owners Manual for complete information about using the chains and how to safely load a variety of cargo items on the platform.

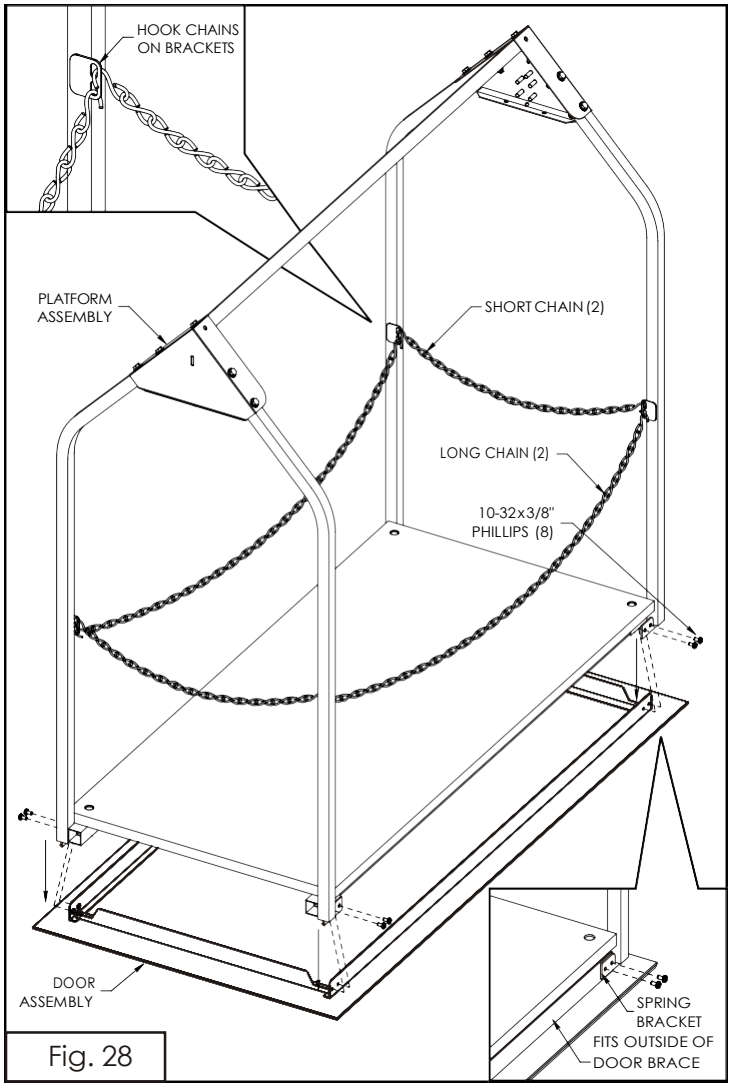

Fig. 28

STOP! If you have already operated the Lift Motor:

STOP and DO NOT PROCEED TO STEP 8! Contact Us immediately (405-516-2412) to get the tech-doc. about how to return the motor to the factory preset position to prevent a serious malfunction of this Lift!

8. CONNECT THE LIFT HEAD TO THE PLATFORM

8-1. Release the cables and let them hang down through the lift opening. Check under housing to see that cable is coming straight down out of the slots (Fig. 29 insets). Make sure the cables are not kinked, tangled or fouled.

8-2. Position the lifting platform assembly directly below the lift opening (Fig. 29). **WARNING: The platform must sit directly on the floor to attach the cables (not on a box or a table).** This sets the cable length so the Lift will reach your floor and know where to stop automatically.

8-3. Pass the ends of the cables through the slots in the platform leg brackets as shown in Fig. 30.

8-4. Pull the cable tight and wind it tightly around the threaded studs **exactly as shown** in the illustration. Wrap it as tightly as possible. Pinch the last loop around the last stud, then pass the end of the cable through the center hole in the bottom of the leg bracket (Fig. 30).

8-5a. Draw the cable tight by pulling firmly on the end of the cable (Fig. 30).

IMPORTANT: To avoid damaging the studs, do not use a power tool to install the cable clamp nuts! Use only a socket and ratchet or an end wrench!

8-5b. While holding tension on the cable, install the cable clamp with the top half leaning away from the cable (see Fig. 30), then install a 1/2 x 3/8" aluminum spacer and **tall** locknut on the last stud and snug it down to hold the cable, but don't tighten it yet. Install the rest of the alum. spacers and **tall** locknuts and snug them down **(*snug is when the nut gets a little tight and you can't turn the aluminum spacer with your fingers*.)** Install the second cable and clamp, applying the same tension as with the first cable. A little bit of slack in the cables is normal.

8-6. Torque all 10 locknuts to 5 foot pounds (60 inch pounds). **If you do not have a torque wrench, then snug all 10 locknuts as explained above, then turn each nut one-half turn (180 degrees) beyond snug (see Fig. 31). *Do not over-tighten these nuts or you may break the studs off!***

8-7. You don't need to cut the excess cable, you can thread it through the two holes in the bottom of the leg bracket (Fig. 32) or you can wind it into a coil and zip tie it inside the bracket. If you do cut off the excess cable, you must leave at least a foot so that you can re-adjust the cable if it becomes necessary.

NOTE: It is important that the excess cable is secured where it can't get caught in the lift opening when the platform goes up or down.

8. CONNECT THE LIFT HEAD TO THE PLATFORM

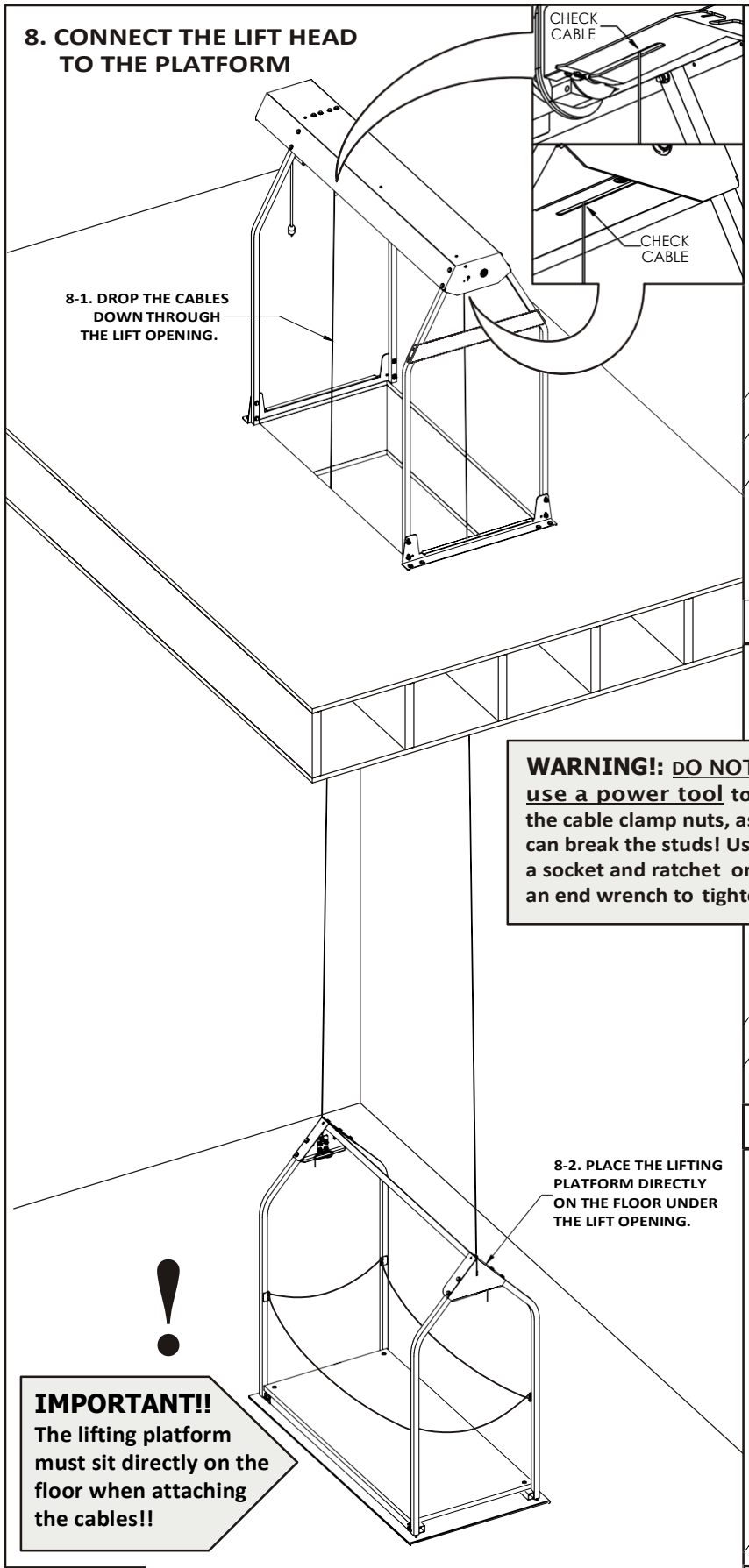

Fig. 29

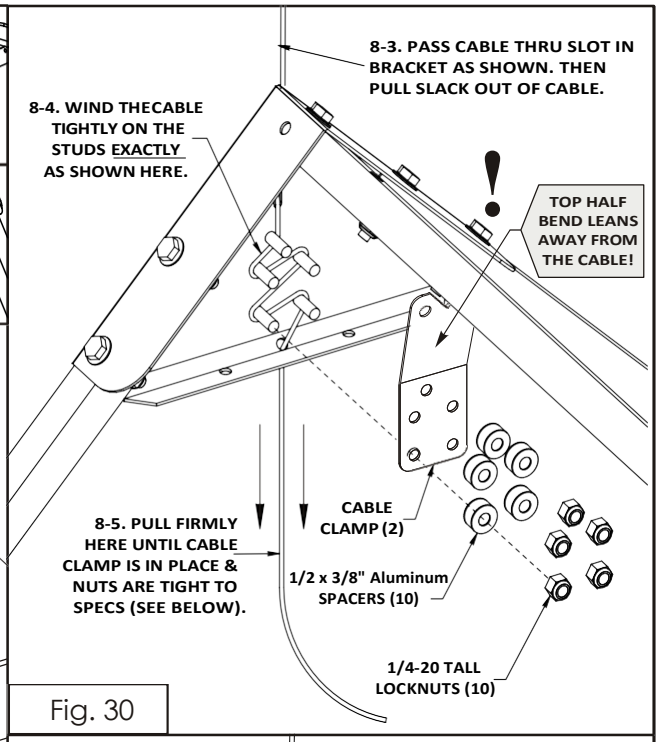

Fig. 30

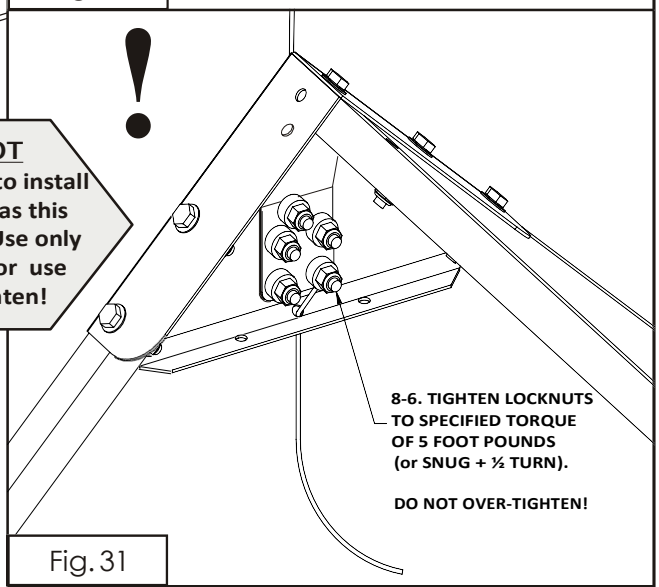

Fig. 31

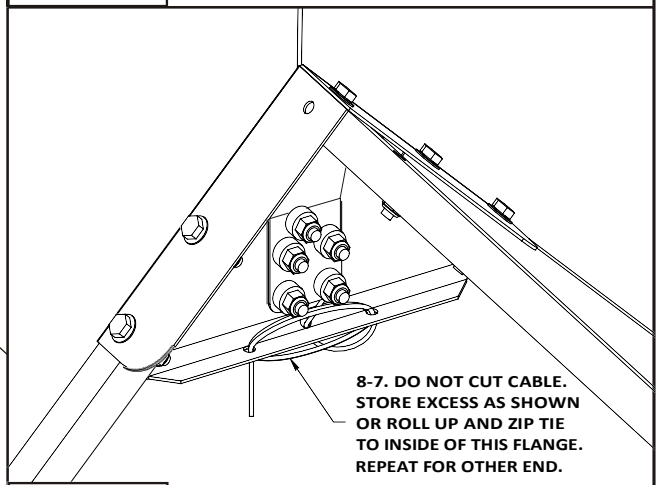

Fig. 32

9.1. REMOVE THE PACKING SCREW

Remove the packing screw (see Fig. 33a) to release the upper limit switch lever. The Lift will not run in the up direction until this lever is free to operate the up limit switch.

9.2. PLUG IN YOUR CONTROL DEVICE

There are three control options for the Versa Lift. General information about each control is provided in Fig. 33b, shown to the right. *(Detailed information and required hardware is provided in the box your control came in).*

The corded remote (keyed) plugs into Port #1.

The downstairs (keyed) wall switch plugs into Port #1, while the upstairs wall switch (no key) plugs into Port #2.

The wireless radio receiver plugs into Port #1. (The receiver can be mounted on the back of the lift head, or on either side of the lift head. See Fig. 33a.)

See Fig. 33a below for the location of control Ports #1&2. Please note the orientation of the locking tab on the plug, as the plug will only insert one way. The locking tab must be depressed whenever you wish to remove the plug.

For more information about the control devices, safety, and Lift operation, please refer to the Owners Manual.

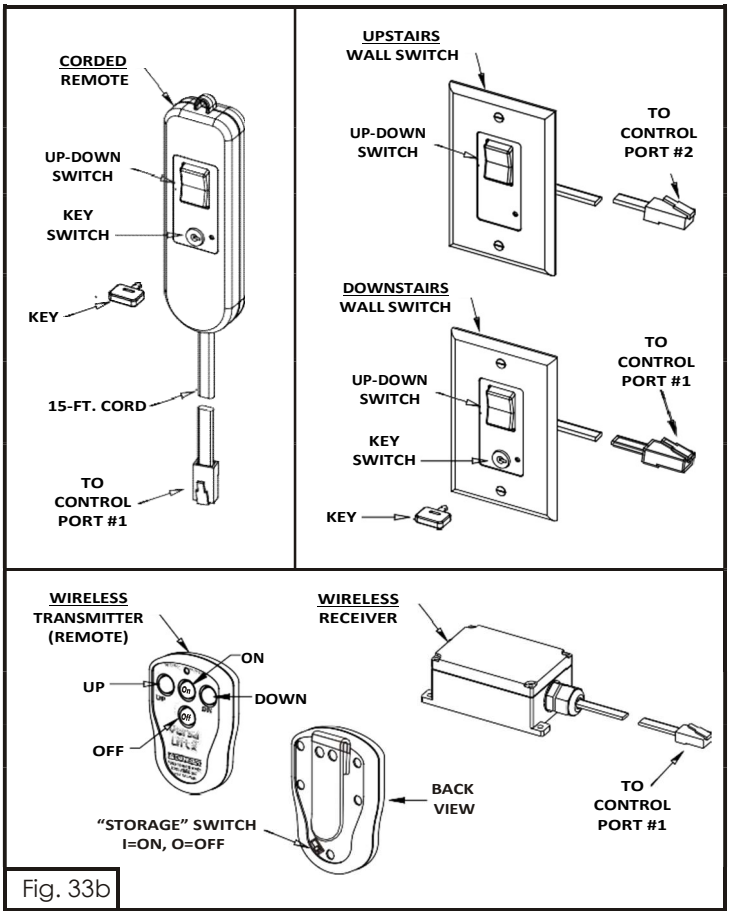

Fig. 33b

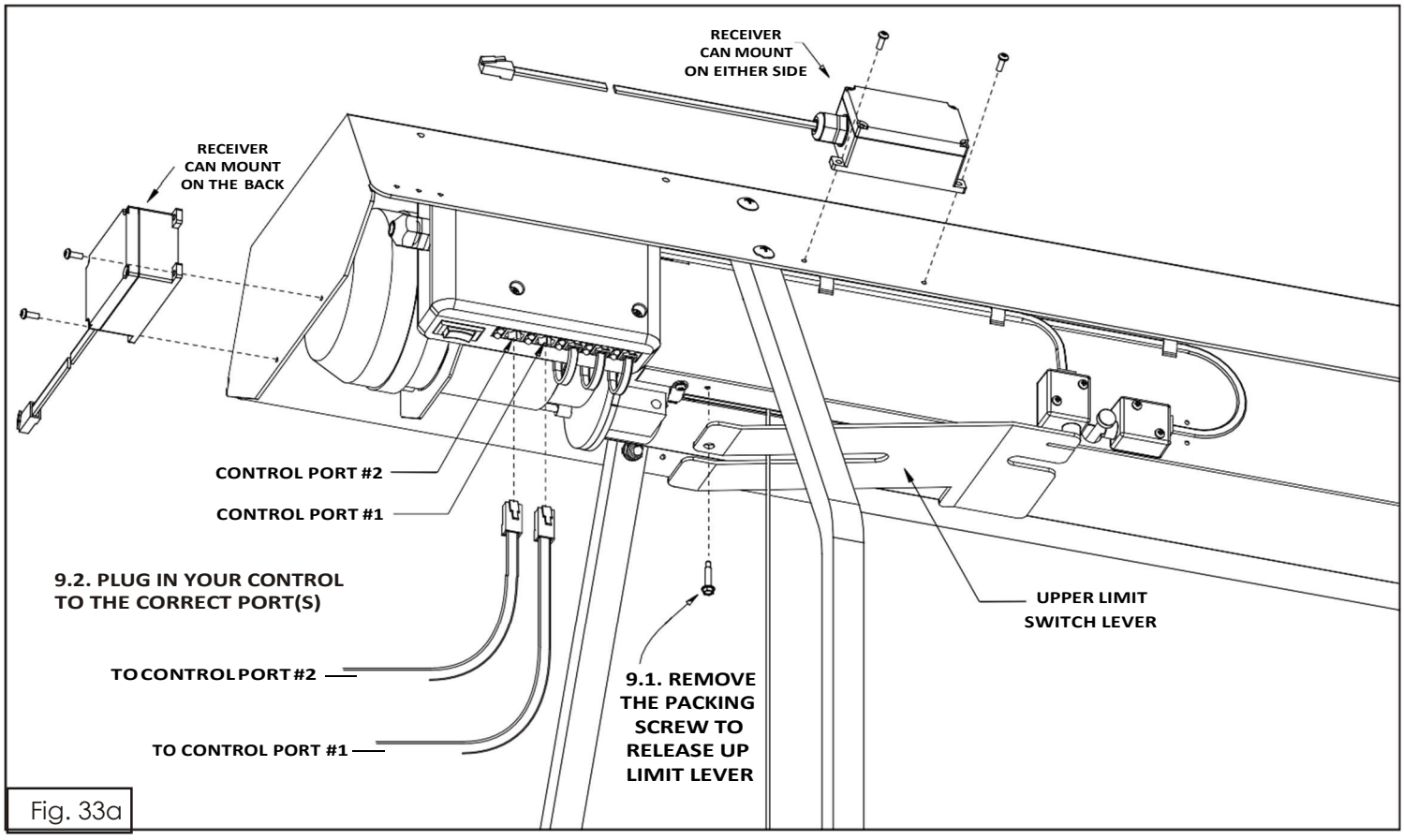

Fig. 33a

10. RAISE THE LIFTING PLATFORM

Review steps 2-8 to make sure you haven't missed any assembly steps. All screws must be tight **except the lag screws** that hold the mounting rails to the deck. They should be loose enough that the rails can be moved freely the distance that the slotted holes allow.

10-1. Make sure the power cord and control cords are clear of the lift opening and are not wrapped around the housing or the housing legs (Fig. 34).

10-2. Plug in the power cord (Fig. 34) to the power outlet.

10-3. Stand clear of the lift and keep your hands clear. Turn the main power switch to "ON" so it is lighted red. Turn ON your control device as explained in Step 9. Press the "UP" direction switch and watch as the platform comes up. When the platform enters the opening, jog the "UP" direction switch to move the platform in small increments, watching to make sure that it does not catch or bind on the opening. (If the platform hangs in the opening, correct any causes before continuing the operation.)

10-4. When the platform comes all the way up, it will lift the upper limit switch lever (see Fig 33a), stopping the motor and the platform before it can impact the Lift Head. The platform should be approximately level with the floor.

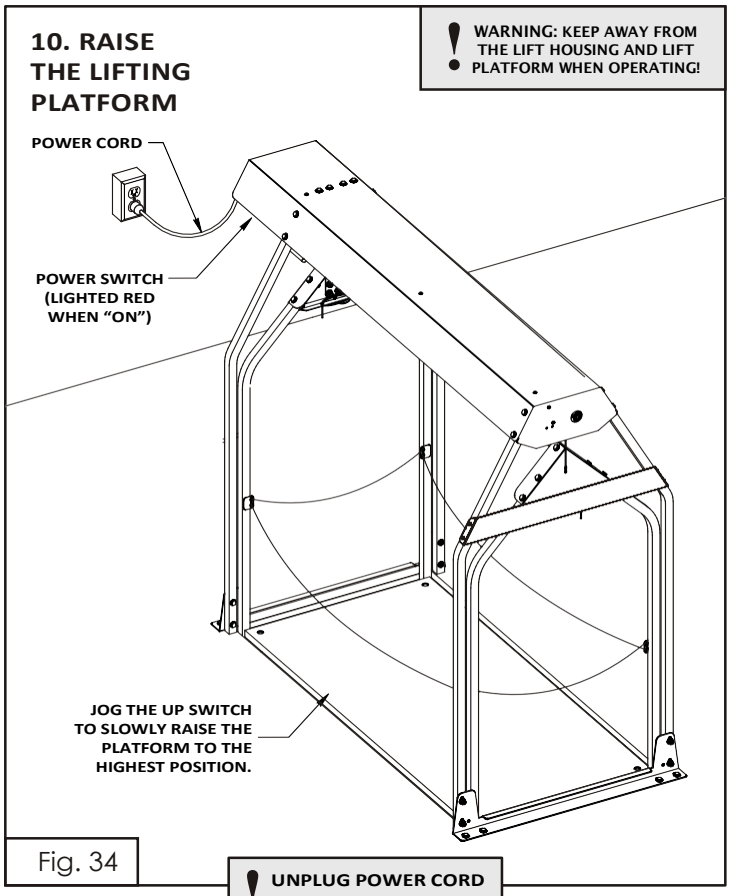

Fig. 34

! Turn off the key or power switch and unplug the power cord before proceeding to the next steps.

! UNPLUG POWER CORD BEFORE PROCEEDING TO THE NEXT STEP!

11. ADJUST THE MOUNTING RAILS

Adjust the mounting rails to center the lifting platform in the opening. Mark the platform center by measuring 22" in from either end and making a small mark (see Fig. 35).

11.1 The mounting rail holes are slotted for adjustment. Push both mounting rails inward against the platform and move the rails and platform left or right until the platform center marks are aligned with the opening center marks.

11.2 With the platform centered and the rails pressed up against each side of the platform, tighten the (4) lag screws on the **first** mounting rail, but don't over-tighten! Place a 1/16" to 1/8" shim spacer between the **second** mounting rail and the platform legs and tighten the remaining (4) lag screws (see Fig. 35).

Note: a strip of single-wall corrugated is a good shim.

11.3 Remove the shim spacers and check your work:

The platform assembly should freely move front-to-back between the guide spacers and side-to-side between the mounting rails 1/16" to 1/8".

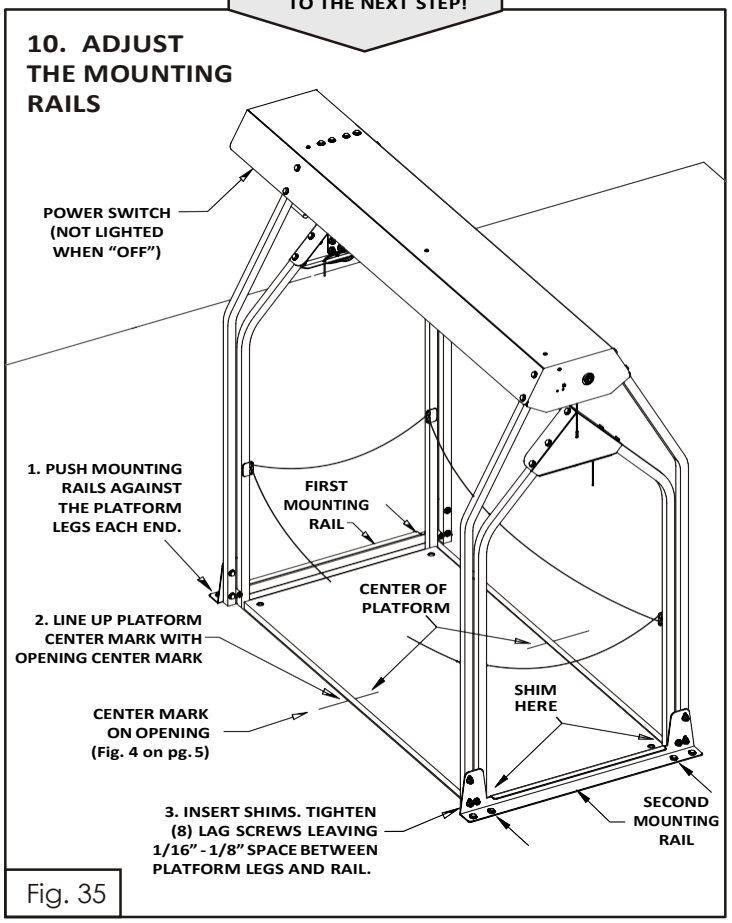

Fig. 35

12. CENTER THE LIFT HOUSING IMPORTANT STEP!

To operate correctly, the lift housing must be adjusted so it is centered over the floor opening. If not centered, the cables will not wind evenly onto the winch drum. Take these steps to center the lift housing.

Step 1: Lower the lift platform until the top is even with the top of the mounting rails. See Fig. 36.

Step 2: Look closely at the space between the outside ends of the platform triangle brackets and the inside walls of the mounting rails. Determine which space is larger, left or right.

Step 3: Adjust the position of the lift housing by pushing it firmly left or right as shown in Fig. 36. If the left space is larger, then push the lift housing right. If the right space is larger, push the housing left. Repeat these steps until the left and right spaces are equal.

Note: Even though the housing legs are bolted tightly to the housing, they will move slightly when forced and this will allow the housing to shift laterally.

13. INSTALL THE STABILIZER BRACKETS:

Note: Position the stabilizer bracket with the **small-hole ends against the legs** and the **large-hole ends on the floor.** With the bracket at 45 degrees the ends should be in flush contact with both the housing legs and the floor. Bend the ends slightly, if needed (see Fig. 37).

Step 1: Position the stabilizer bracket as detailed below under the **motor-end** of the lifting head (see Fig. 37). Install the #12 x 1" screws (4) through the larger holes and into the floor decking. Tighten screws snug, but be careful not to strip them out.

Step 2: Using a drill or driver, install the #8 drill-point screws through the smaller holes in the upper end of the bracket and into the housing leg (see Fig. 37). Take care not to drive the screw too fast, because when it becomes tight the screw will stop instantly and it can break off!

IMPORTANT: For safety reasons, install the brackets under the motor-end (over-hang) of the lifting head so they don't project into your walking path (see Fig. 37).

Congratulations! Your installation is complete!

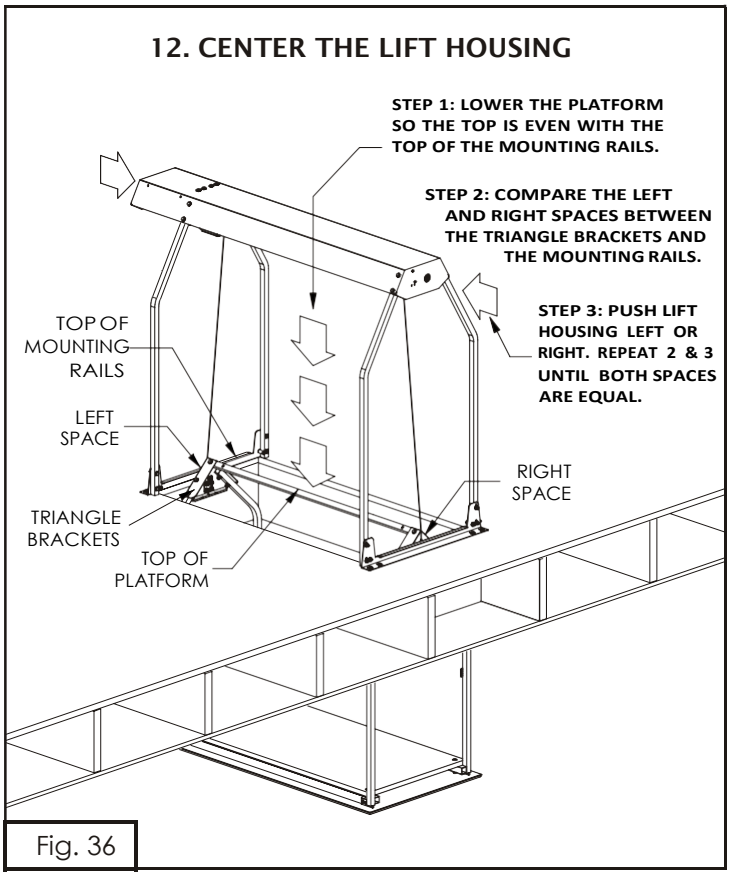

Fig. 36

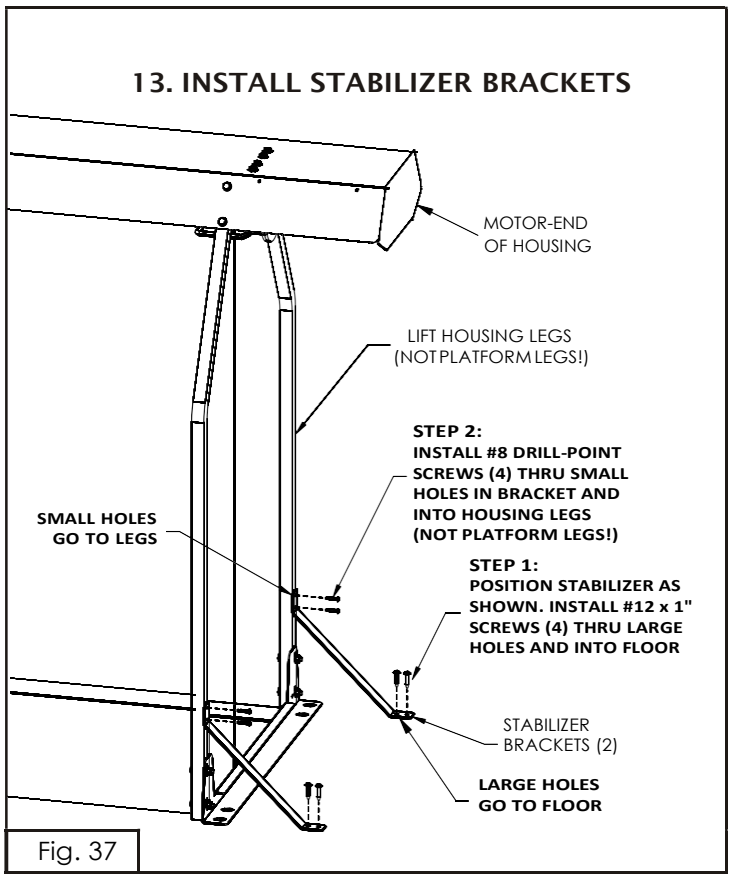

Fig. 37

⚠WARNING To reduce the risk of serious injury, or death, do not ride the Lift! Read the Owners Manual before operating the Versa Lift!

The owners manual provides many important facts about your safety when operating the VersaLift. The owners manual also explains the many VersaLift operating features and tips that you will want to know.

The proper way to operate your new Versalift after it has been installed and tested....

1. Always press the down button the ENTIRE time allowing the Versalift to come to a stop automatically when it comes to rest on the floor.
2. Always press the up button until the lift stops on its own up in the attic. The lift will shut itself off when it arrives flush with the attic floor.

This practice allows the lift to maintain the cable around the cable drum properly insuring a trouble-free operation for years to come.

Do Not lower the lift onto a box, workbench, pickup bed or at waist/knee height to unload. This can cause the cable to wind up backwards creating an issue with the cable around the drum.

Put your load in the center of the lift, or stacked as evenly as you can to insure a smooth operation.










NOTICE: The VersaLift is available in 1 of 3 Switching Methods.

1. **Corded (Standard Series)**
2. **Wireless Remote ("W" Series)**
3. **Mounted Wall Switches ("M" Series) (2)**

You CANNOT HAVE A CORDED and a WIRELESS or MOUNTED it is either/or. You CAN upgrade at any time.

Versa Lift Corded Remote Control Kit

CORDED REMOTE CONTROL KIT INSTRUCTIONS:
These instructions are supplemental only! To avoid system damage: FIRST, please follow every step in the ***Versa Lift Installation Guide*** Steps 1 thru 9.2!

DO NOT CONNECT these controls until you have completed EVERY installation step 1 thru step 9.2. In **"STEP 9.2 PLUG IN YOUR CONTROL DEVICE"** you will be told to connect these controls.

9.3. Corded Remote Control Kit Contents:
-Handheld Remote Control with
15ft Remote Cord with Plug (1)
-6-32 x 1/4" Phillips Screws (2)
-Cord Clamp strain relief (1)

THEN FOLLOW THESE INSTRUCTIONS:

9.4. Connect the Remote Cord Plug
Insert the remote cord plug into Control Port #1 (Fig. 1a).

9.5. Secure your Remote Cord to the Lift Head
Use two 6-32 x 1/4" screws to mount the Cord Clamp to the Lift Head, securing the cord against strain (Fig. 1b inset). Take care to center the cord under the clamp as you tighten the screws. This clamp will help prevent damage to your lift motor driver board if the remote cord is accidentally pulled on to hard.

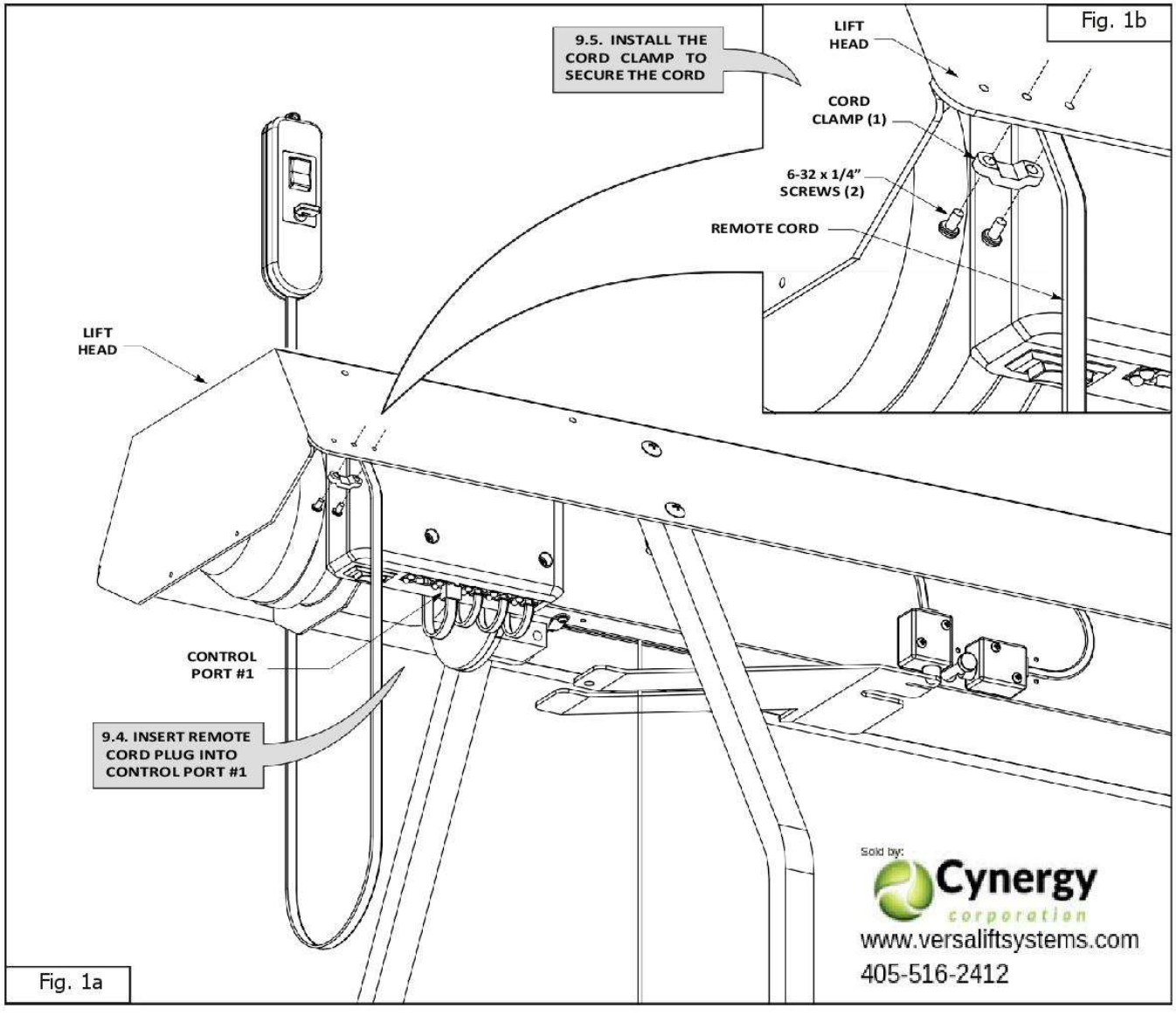

Fig. 1b

Fig. 1a

Versa Lift Mounted Wall Switch Control Kit

MOUNTED WALL SWITCH CONTROL KIT INSTRUCTIONS:

These instructions are supplemental only! To avoid system damage: FIRST, please follow every step in the *Versa Lift Installation Guide* Steps 1 thru 9.2!

DO NOT CONNECT these controls until you have completed EVERY installation step 1 thru step 9.2. In "STEP 9.2 PLUG IN YOUR CONTROL DEVICE" you will be told to connect these controls.

↓ ↓ THEN FOLLOW THESE INSTRUCTIONS ↓ ↓

9.3. Mounted Wall Switches Control Kit Contents:

- Non-Locking Switch Plate (1)
- Key-Locking Switch Plate (1)
- 6-32 x ½" Flat Head Phillips Screws (4)
- Wall Plates with Screws, White (2)
- 10-ft. Upstairs Control Cord (1)
- 50-ft. Downstairs Control Cord (1)

9.4. Install the Non-Locking Wall Switch Upstairs
Plug the 10-ft control cord into the non-locking switch plate. Install the non-locking switch plate into an single gang wall box **upstairs** using two 6-32 x ½" flat head phillips screws (Fig. 1a). Tighten the screws lightly!

9.4. Install the Key-Locking Wall Switch Downstairs
Plug the 50-ft control cord into the key-locking switch plate. Install the key-locking switch plate into a single gang wall box **downstairs** using two 6-32 x ½" flat head phillips screws (Fig. 1b). Tighten the screws lightly!

9.6. Plug in the Upstairs Wall Switch
Install the plug for the **upstairs** wall switch (10-ft.) control cord into the Lift Head **control port #2** (Fig. 1c).

9.7. Plug in the Downstairs Wall Switch
Install the plug for the **downstairs** wall switch (50-ft.) control cord into the Lift Head **control port #1** (Fig. 1c).

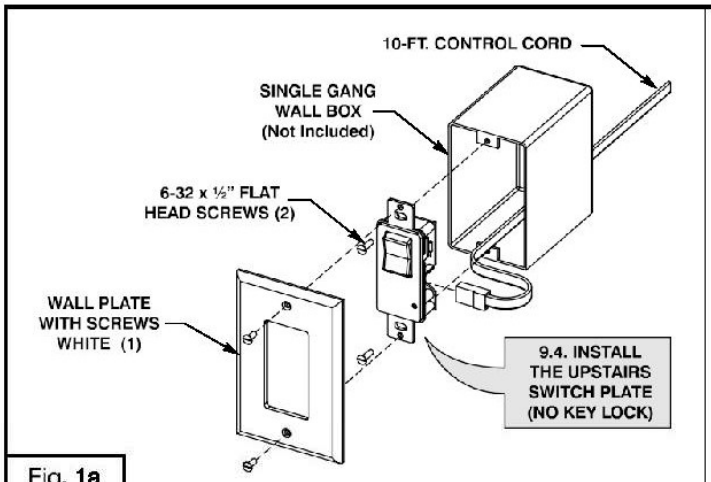

Fig. 1a

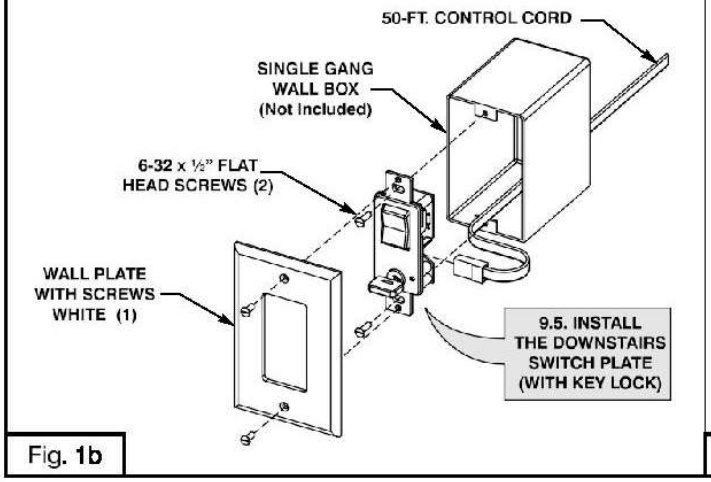

Fig. 1b

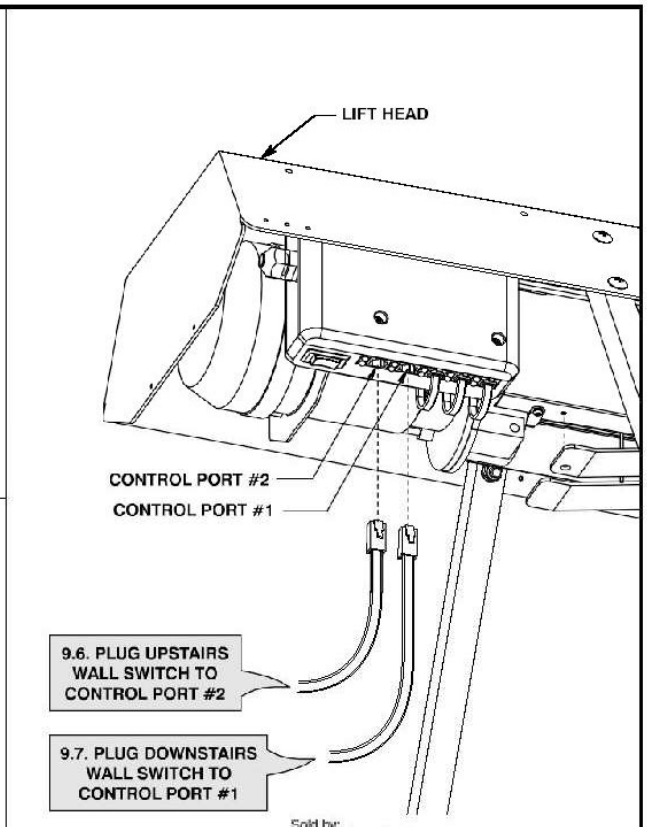

Fig. 1c

Sold by:
Cynergy corporation
www.versaliftsystems.com
405-516-2412

Versa Lift *Panther* Wireless Transmitter & Receiver

WIRELESS CONTROLS KIT INSTRUCTIONS:

These instructions are supplemental only! To avoid system damage: FIRST, please follow every step in the *Versa Lift Installation Guide* Steps 1 thru 9.2!

DO NOT CONNECT these controls until you have completed EVERY installation step 1 thru step 9.2. In "STEP 9.2 PLUG IN YOUR CONTROL DEVICE" you will be told to connect these controls.

→ → THEN FOLLOW THESE INSTRUCTIONS → →

9.3 Wireless Controls Kit Contents:

- Transmitter Remote (1)
- Wireless Receiver with Plug (1)
- 6-32 x 5/16" Phillips Screws (2)

9.4. Mounting your Wireless Receiver

Use the two 6-32 x 5/16" screws to mount the receiver in one of three locations on the Lift Head (Fig. 1b).

9.5 Connect the Receiver Plug

Install the receiver plug into Control Port #1 (Fig. 1b).

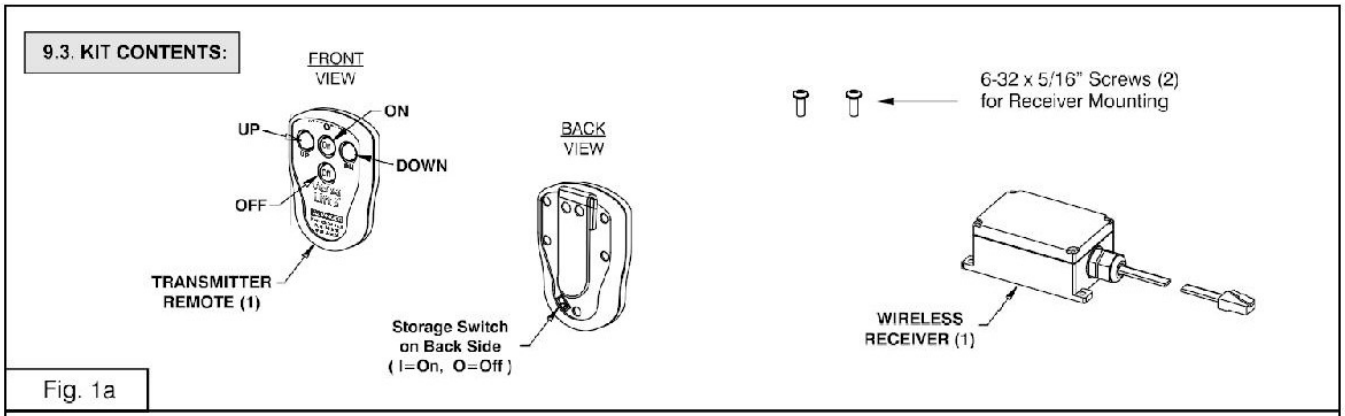

Fig. 1a

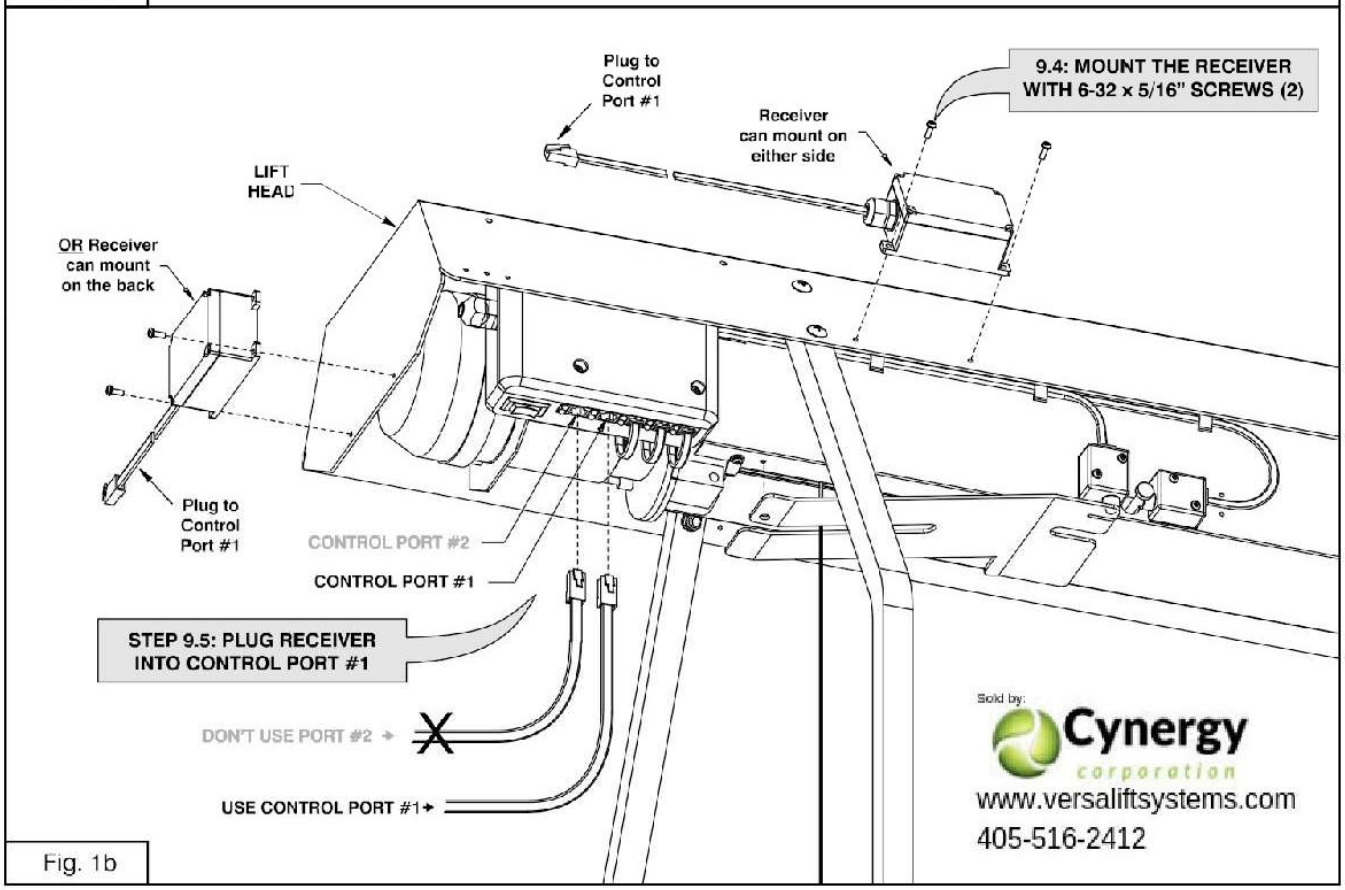

Fig. 1b

Versa Lift *Panther* Wireless Transmitter & Receiver

9.6. WIRELESS REMOTE OPERATION

The ***wireless receiver*** and ***remote transmitter(s)*** are **"paired"** together at the factory. Each transmitter transmits a unique code. Each receiver can be paired with multiple transmitters.

A storage switch on the back of the transmitter connects the battery when ON (I), or disconnects the battery when OFF (O). The front of the wireless remote has four momentary switch buttons. The middle two buttons turn the remote ON or OFF. When the ON button is pushed, the indicator will flash green. The transmitter turns off automatically when not used for 3-4 minutes.

The left button on the remote is UP. When the UP button is pressed, the cables will be wound up, raising the lifting platform to the highest position, where it will stop when it trips the upper limit switch. When the upper limit switch is tripped, the UP button on the remote will be disabled.

The right button on the remote is DOWN. When the down button is pressed, the lift cables will be wound out until the lifting platform contacts the lower floor surface and trips the lower limit switch that senses slack in the cables. When the down limit switch is tripped, the down button on the remote will be disabled.

Note: If your transmitter fails to operate the Lift:

- Check the Lift is plugged in and the power switch is ON and lighted.
- If you have two transmitters, one must be OFF when the other is ON.
- Check that the storage switch is set to ON (I).
- Check the ON button is pushed and the green indicator is flashing.

For dependability, install **new** AAA batteries every year (fresh from the store, not from a drawer!). Remove 5 screws on transmitter back to change batteries (see **Transmitter Back View** below.)

For more troubleshooting information, go to Section 13 on page 12 of the *Versa Lift Owners Manual* for more possible remedies.

9.7. PAIRING A TRANSMITTER TO THE RECEIVER

Each receiver ships already paired with a transmitter. The receiver can be paired with multiple transmitters. If you purchased a second transmitter after installing your lift, or replaced a broken transmitter, you will need to pair the new transmitter to the receiver.

Steps to pair a new or second transmitter:

! ***To pair a second transmitter, the first one must be turned off!*** !

STEP 1: Remove the screws and the cover from the receiver.

STEP 2: Set the storage switch on back of transmitter to ON "I".

STEP 3: Press the transmitter **ON** button so green indicator flashes.

STEP 4: Press the **Function "F"** button for one second. One LED will light steady red. Then press the **Select "S"** button for one second. Five LEDs will light red showing receiver is now in "learn mode." (The receiver will stay in the learn mode for 10 seconds.)

STEP 5: Press the transmitter **"UP" and "DN"** buttons **at the same time,** and hold until the five LEDs flash twice showing the transmitter is paired with the receiver. Release the buttons and the LEDS will flash one more time to signal exiting the learn mode.

STEP 6: Test the operation to make sure the UP and DN buttons operate the lift in the correct directions.

STEP 7: If the lift operates correctly, replace cover and 4 screws. ***If the UP and Down buttons do not operate the lift correctly, you will need to repeat the pairing procedure steps 2 thru 7.***

NOTE: Only one transmitter can control the receiver at any given time. So, you must turn off the first transmitter to switch control of the receiver to the second transmitter.

TO CLEAR ALL PAIRINGS: Press the **"F"** button for 1 second then press the **"S"** button and hold it down at least 8 seconds (all LEDs will light, then go out). All transmitters are now erased from memory. Repeat steps 2 thru 7 above to re-pair each transmitter.

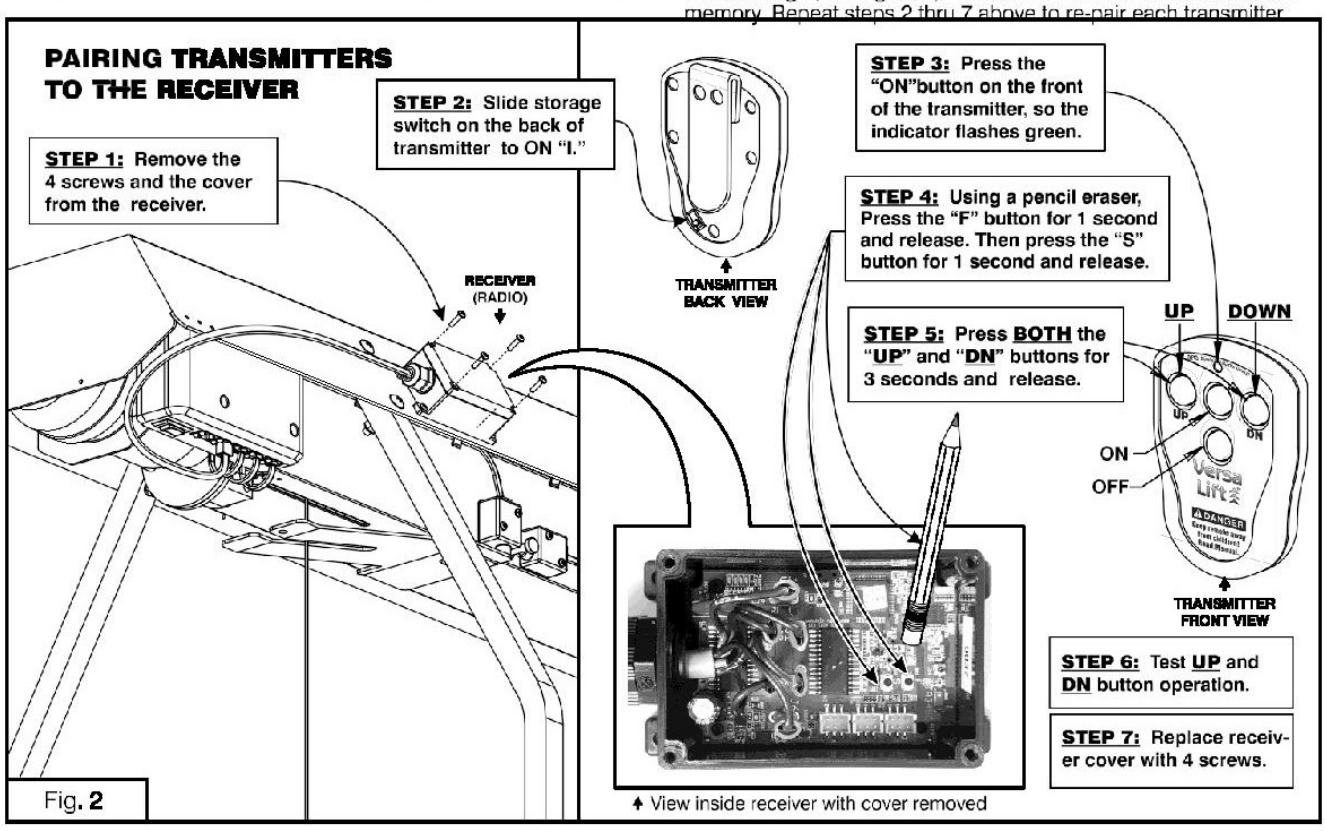

Fig. 2