INSTALLER: Deliver this booklet to the Home Owner!

Versa Lift™

Attic Storage Lifting System

Protected By
US Patent8,418,814
US Patent8,851,238
US Patent8,702,069

OWNERS MANUAL

All Models 32

CONTENTS Page

Safety Rules.....2,3
How it Works.....4
Electrical.....4
Lift Controls.....5
Loading Cargo.....6,7
Operation.....8,9
Maintenance.....10,11
Troubleshooting...12,13
Programming Wireless Remotes.....14
Parts List.....15

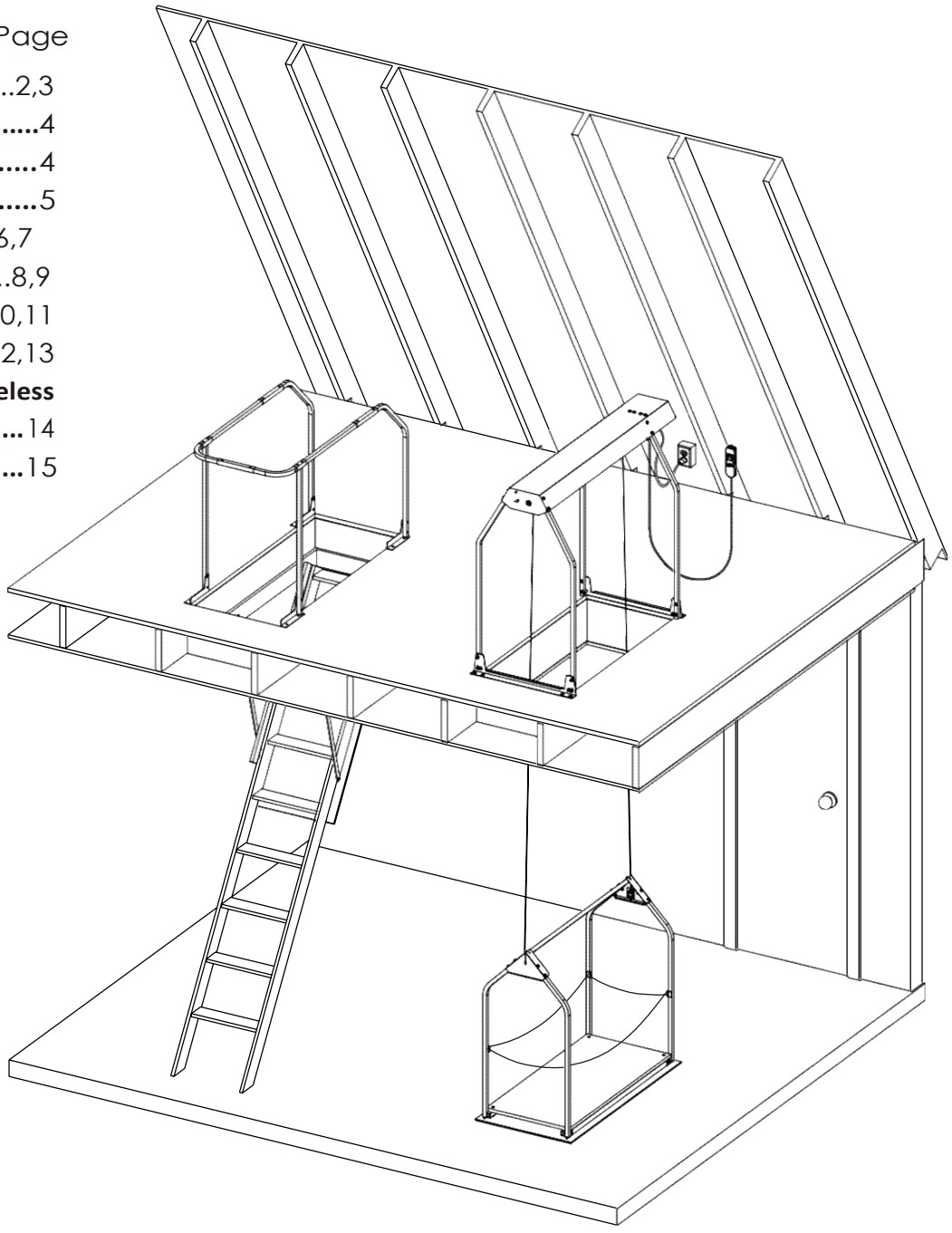

Sold by: Cynergy corporation
www.versaliftsystems.com
405-516-2412

IMPORTANT! READ & SAVE THIS MANUAL!
This manual includes essential safety and maintenance information. Read this before operating the Versa Lift!

Copyright © 2006 - 2019 BPG
All rights reserved.
Revised March 2019

READ THIS BEFORE OPERATING THE VERSA LIFT

SAFETY GUIDELINES - DEFINITIONS:

It is important to read and understand this manual. The information it contains relates to protecting *your safety* and *preventing problems*. The symbols below are used to help you recognize safety information.

DANGER **Indicates an imminently hazardous situation which, if not avoided, will result in death or serious injury.**

WARNING **Indicates a potentially hazardous situation which, if not avoided, will result in death or serious injury.**

CAUTION **Indicates a potentially hazardous situation which, if not avoided, will result in minor or moderate injury.**

DANGER **NEVER ALLOW PERSONS ON OR IN THE LIFT! NEVER SIT OR STAND ON THE LIFTING PLATFORM! ABSOLUTELY NO RIDERS! No person under 18 years of age should be allowed to operate this product. Children should be kept away from the lift when it is in operation. When not in use, lock the remote control and remove the key and store it where children cannot get it! This product can cause serious injury or death to a child who attempts to ride the lift or to lift others! When not in use, ALWAYS raise the lifting platform to the highest position and unplug the power cord to lift, lock the remote and store the key!**

WARNING **WHEN WORKING IN THE ATTIC, STAY ON DECKED AREAS. If you must enter non-decked areas, stay on joists. The materials between the joists will not support your weight and will collapse if you stand or sit on them. Be alert to overhead hazards, such as exposed nails. Be aware of and avoid openings, such as the ladder opening or the lift opening when you are working or moving around in the attic.**

WARNING **DO NOT WORK ALONE IN A HOT ATTIC or if you have any health condition that could affect your balance, your mobility, or cause you to loose consciousness. If you have any diminished capacity, always work with another person in case you should need help. Don't work in the attic in the heat of the day. You can quickly be overcome by heat exhaustion in a hot attic in just a matter of minutes. Morning hours are the coolest time to work in the attic.**

WARNING **DO NOT OPERATE THIS EQUIPMENT IN DAMP, WET OR POORLY LIGHTED LOCATIONS or attic spaces and don't expose it to rain. Do not use this equipment in the presence of flammable gases or liquids. Keep the work area clear of obstacles, cluttered areas invite injuries. Use only correctly grounded power outlets or extension cords. Never operate equipment without grounding!**

IMPORTANT: **ALL OPERATORS MUST READ AND UNDERSTAND THIS OWNERS MANUAL COMPLETELY BEFORE OPERATING THIS EQUIPMENT. SAVE THIS MANUAL AND REFER TO IT OFTEN TO REDUCE THE RISK OF ACCIDENTS, SEVERE INJURY, OR DEATH.**

DANGER **NEVER STORE FLAMMABLE LIQUIDS IN YOUR ATTIC, such as gasoline, paint thinner, aerosol cans, or other solvent or fuel containing products, tools, or devices. Attic temperatures can cause containers to rupture and explosive fumes can reach ignition sources.**

WARNING **FALLING HAZARD: The ladder opening and lift opening present falling hazards to any person who enters the attic. When you are in the attic space, be alert at all times to these openings. *We highly recommend you install a safety railing around your ladder opening, such as the Versa Rail by BPG* (see Fig. 0).***

WARNING **If you install this lift product inside the living space of a home, or in a closet, or a walk-in attic accessible to children, then you must also install the Auto-Shutter* from BPG that automatically closes the lift opening as the platform goes down to help prevent children, pets, etc. from falling through the opening (the Auto-Shutter is not illustrated in this manual).**

For information on the Versa-Rail, Auto-Shutter, and other Versa Lift accessories visit www.versaliftsystems.com

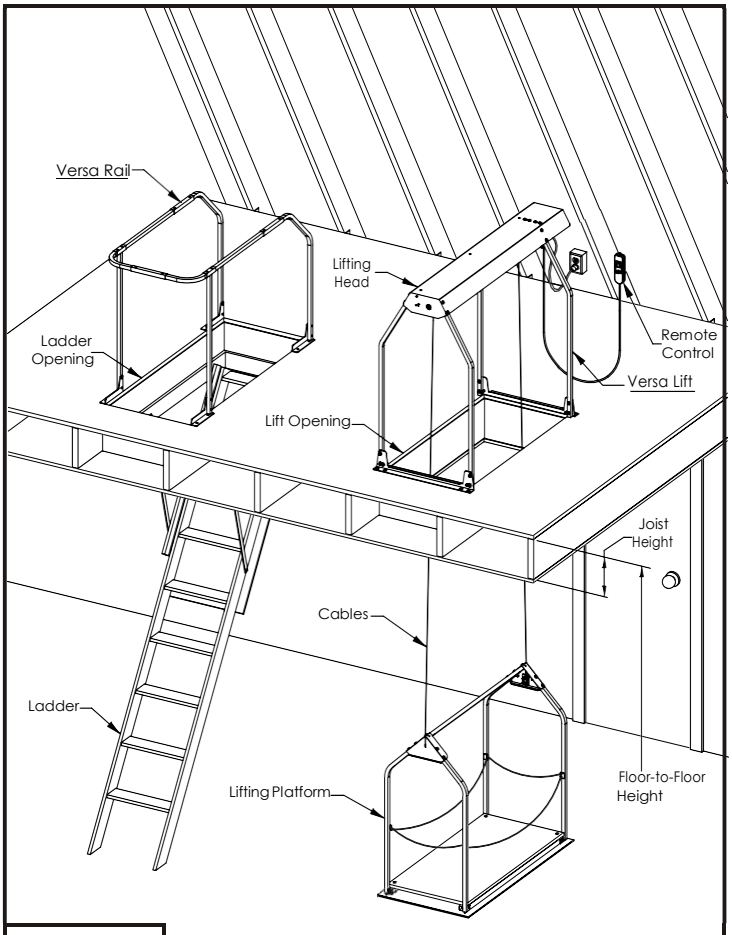

Fig. 0

VERSA LIFT OPERATOR SAFETY RULES:

DANGER **FAILURE TO FOLLOW THESE RULES MAY RESULT IN DEATH OR SERIOUS INJURY.**

1. Never allow children or adolescents to operate the Versa Lift. No one under 18 years of age should be allowed to operate this equipment.

2. To avoid accidents and injury all operators must first read and understand this manual. It is unsafe for any person, regardless of age or experience, to operate this equipment without first learning the safety rules.

3. Protect children and visitors, their safety is your responsibility. Keep children out of the attic. Keep children and unfamiliar persons away from the lift during operation. When not in use, **unplug** the Versa Lift, **lock the remote** in the OFF position and **remove the key.** Store the key in a safe place away from the lift and out of reach of children.

4. Instruct children of the dangers of unauthorized use. This equipment is powerful and could cause severe injury or death if used by anyone but responsible adults!

5. Keep children out of the attic. The attic is extremely dangerous for small children, even when adults are present! Children are unaware of the dangers and can step off decked areas or fall through openings.

6. Never allow persons on or in the lift or the lifting platform. Absolutely no riders on this equipment! Any person riding the platform is likely to become caught between the lifting platform and the ceiling opening. Riding the platform is extremely dangerous and presents the following hazards:

Falling Hazard - head injury, broken limbs, death.
Crushing Hazard - injury to head, limbs or body, death.
Amputation Hazard - body parts cut or torn off, death.

7. Stand Clear! Never stand under or below the lifting platform. Always stay clear of the lifting head, the cables, and the lifting platform when operating the lift. Stand well back to avoid accidents, like falling objects.

8. Always LOOK to make sure no one is standing near or underneath the lift before lowering lifting platform.



9. Always LOOK to make sure no one is loading or unloading the platform before raising or lowering the lifting platform.

10. Never exceed the rated 250 pound lifting capacity of this equipment. Two smaller loads are safer and easier to handle than one large heavy load. If you must put heavy items in the attic, remember to place them near the perimeter, close to support walls.

11. Never attempt to lift or lower oversized loads that extend outside the confines of the lifting platform frame, either in length, width or height. Oversized loads can catch on the lift opening and fall off or jam the lift mechanism.

12. Always balance your loads to the center of the lifting platform. Off-center loads are unstable.

13. Never lift or lower objects that are unstable, can tip over, or roll off of the lifting platform. Place these objects inside a stable container on the lifting platform.

14. Inspect the cables before each use. With the lifting platform down, check top to bottom for any damaged, worn or frayed spots. If any are found, immediately stop using the lift until the cables have been replaced.



15. Inspect the power cord, remote cord, lifting head and platform for any damage, worn or broken parts, or loose fasteners. If any are found, repair or replace these items immediately before using the lift again.

16. Install a railing around the ladder opening. The ladder opening presents a falling hazard. A railing greatly reduces the risk of falling and makes it easier to enter or exit a steep folding ladder by providing a hand rail to hold on to. For information on BPG's Versa-Rail, visit www.versaliftsytems.com

17. Always keep the lifting platform in the highest (raised) position when working in the attic and also whenever the lift is not in use. When raised to the highest position, the lifting platform closes the lift opening and prevents anyone from stepping into or falling through the opening. **Note: Never stand on the Lifting Platform!**

18. Never work alone in the attic in hot weather (above 90°F) or if you have any health conditions that impair your balance, strength, or mobility. Always work with an able helper.

19. When in the attic, stay on decked areas. Walking on joists is dangerous. The material between joist will not support your weight and will collapse if stepped on.

20. When in the attic, be alert to overhead hazards, such as rafters, braces or exposed nails. Take steps to make your attic a safer place to work. Remove hazards if possible. If not, make them more visible with yellow or orange paint or apply padding in strategic places.

21. Install adequate lighting in your attic. You can improve attic safety by improving visibility with extra lighting.

22. Wear appropriate apparel when working in the attic or operating the lift. Do not wear loose clothing, ties, necklaces, etc. which can become caught in moving parts or obstructions. Contain long hair with protective hair covering. Wear secure, non-slip protective footwear.

23. Do not overload your attic floor. Please consult a professional for advice on the safe weight capacity of your particular attic floor structure. The strength of your attic floor depends on the **size** of the joist beams used in the structure versus the **span** of the joist beams. The longer the unsupported span of any given size joist beam, the lower the weight carrying capacity. Walls provide support for joist beams, so weight should be placed as close to walls as possible.

24. Keep an inventory list. It is a good practice to keep an inventory list of what you have stored in your attic. Useful information would include a description of the item (or box contents) and the approximate weight. The list will help you remember what you have stored and give the approximate total weight load in your attic.

Versa Lift: HOW IT WORKS & ELECTRICAL

Congratulations! *You have purchased a quality engineered personal storage lift product designed to provide years of durable, dependable service and storage convenience!*

1a. VERSA LIFT - HERE'S HOW IT WORKS!

The Versa Lift has of a stationary lift head assembly and a movable lifting platform assembly as shown in Fig. 1a.

The main power switch is located under the lift housing where the control cords plug in. The switch lights up when in the on position.

The lift head assembly is mounted on the attic floor (or other second floor) over the lift opening. The lift head assembly is a lift housing with a motor inside, supported by four housing legs and connected to the floor by the mounting rails as shown in Fig. 1a.

The lifting platform assembly consists of a steel frame with a platform floor that supports cargo to be moved between upper and lower floors. The lifting platform is connected to the lifting head by 2 cables attached to the platform leg brackets. Chains surround the cargo area to help contain the cargo on the platform (Fig. 1a).

When you push the UP button, a hoist motor in the lift housing winds up the cables, pulling the lifting platform up. When the platform is all the way up it **trips the up limit switch lever** under the lift head, stopping the motor. Fig. 1a shows where the up limit switch lever is located under the lift housing.

When you push the DOWN button, the cables are wound down, lowering the platform. When the platform comes to rest on the floor, the cables go slack which **trips the down limit switch**, stopping the motor. Fig. 1a shows the platform all the way down and slack cable.

The door panel is under the platform & connected only by springs. As the lifting platform is raised through the ceiling opening, the door stops against the ceiling while the platform continues to rise upward stretching the springs that support the door. **The lifting platform stops level with the attic floor**, making it easy to load and unload heavy cargo without lifting. This is one of Versa Lift's many unique features.

1b. ELECTRICAL CONNECTIONS

The Versa Lift requires a standard 120 volt AC 60 hz grounded outlet. **We highly recommended that the outlet is on the same switched circuit as the lighting in your attic** so that when the attic lights are turned off, the Versa Lift is also turned off. This will provide both safety and convenience for you, and will prevent unintended or accidental operation when the lift is not in use.

The power cord provided with this product has three blades. The longest (round) blade is the grounding blade (Fig. 1b). The shorter (flat) blades are the current carrying blades. You will need a grounded power outlet (receptacle) as shown below (Fig. 1b). If your outlet does not have a grounded receptacle for a three blade plug or if you are unsure if your outlet is correctly grounded, have a qualified electrician check the outlet (receptacle) to make sure it meets local codes. Incorrect grounding puts you at risk of electrical shock. **You should never modify the equipment plug to fit a two blade outlet (receptacle)!**

If you temporarily use an extension cord, it must be a heavy duty three-wire type with a three blade grounding plug, as is shown in Fig. 1b and rated for at least twice the load (10 amps minimum).

SAFETY WARNING: To reduce the risk of accidents, always store the lifting platform in the highest position and turn off the power to the Versa Lift whenever it is not being used.

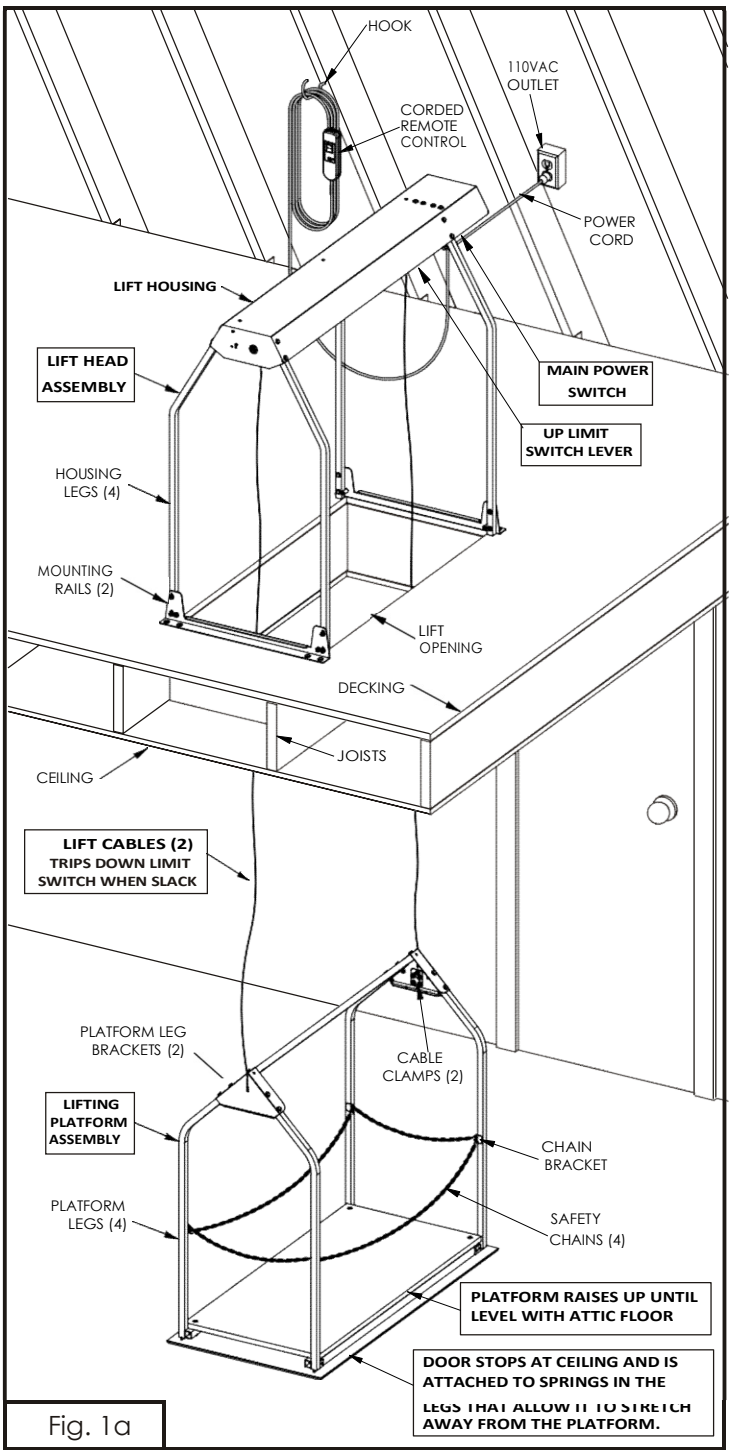

Fig. 1a

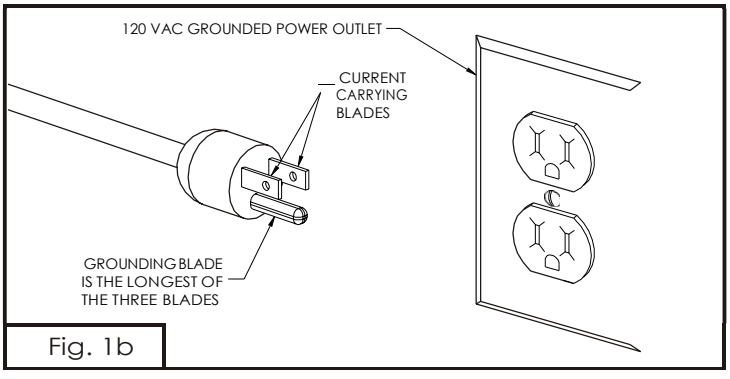

Fig. 1b

2. CORDED REMOTE CONTROL

The corded remote control is provided with a 15-foot cord so you can safely operate the lift while having mobility. Depending how close your ladder is to the lift, you can bring the remote down the ladder, or stand midway on the ladder with the remote control. This position allows you to see below the lift to make sure that no person or object is in the way of the lifting platform movement as it is moving down.

A main power switch is located under the lift housing (Fig. 1a). The power cord must be plugged into an electrical outlet and the main power switch turned ON (lighted), before the remote control will operate the lift system.

The remote control features a locking key switch to turn the controls ON or OFF, and a rocker switch to select upward or downward movement of the lifting platform (see Fig. 2). When the key switch is set to OFF and the key is removed, the rocker switch is disabled. When the key is inserted into the switch and rotated to the ON position, the remote and rocker switch are operational.

When the rocker switch is pressed UP, the cables will be wound up, raising the lifting platform to the highest position where it lifts the upper limit switch lever (see Fig. 1a) and stops the lift motor from running in the upward direction.

When the rocker switch is pressed DOWN, the cables will be wound out until the lifting platform contacts the lower floor and the cables go slack, which trips the lower limit switch and stops the lift motor from running in the downward direction.

After each use, raise the lifting platform to the highest position and rotate the key to the OFF position. Remove and store the key in a safe place when children are present. Turn off the main power switch on the Versa Lift power head after each use (see Fig. 1a).

3. MOUNTED WALL SWITCH CONTROL

The mounted wall switch controls feature two wall switch plates with rocker switches to select upward and downward movement of the lifting platform (see Fig. 3). The downstairs switch plate includes a locking key switch. When the key switch is set to OFF and the key is removed, the both rocker switches are disabled. When the key is inserted into the switch and rotated to the ON position, both rocker switches are operational.

A main power switch is located under the lift housing (Fig. 1a). The power cord must be plugged into an electrical outlet and the main power switch turned ON (lighted), before the wall switches will operate the lift.

When the rocker switch is pressed UP, the cables will be wound up, raising the lifting platform to the highest position where it lifts the upper limit switch lever (see Fig. 1a) and stops the lift motor from running in the upward direction.

When the rocker switch is pressed DOWN, the cables will be wound out until the lifting platform contacts the lower floor and the cables go slack, which trips the lower limit switch and stops the lift motor from running in the downward direction.

After each use, raise the lifting platform to the highest position and rotate the key to the OFF position. Remove and store the key in a safe place when children are present. Turn off the main power switch on the Versa Lift power head after each use (see Fig. 1a)

4. WIRELESS REMOTE CONTROL

The wireless control features our new powerful ***Panther*** wireless radio transmitter and a radio receiver (see Fig. 4).

A main power switch is located under the lift housing (Fig. 1a). When the power cord is plugged into an electrical outlet and the main power switch is ON (lighted), then the lift is energized and the wireless receiver is active and can receive signals.

A storage switch is on the back of the transmitter: I=ON, O=OFF.

4 momentary switch buttons are on the front of the transmitter: The 2 middle buttons are marked ON and OFF (Fig. 4). Press the ON button for 2 seconds and the green indicator will flash showing the transmitter is active. If the transmitter is unused for 3-4 minutes, then it will shut off automatically until the ON is pressed again. (This safety feature helps to prevent unintended lift operation.)

The UP button (left) winds the cables up, raising the lifting platform, which will stop automatically at the upper limit switch lever (Fig. 4).

The DOWN button (right) winds the cables down lowering the lifting platform which stops automatically at the floor when the lower limit switch is tripped by slack in the cables.

WARNING Store the transmitter with the storage switch "off" (O) and keep it safely out of reach of children when not in use.

CAUTION To avoid unintentional operation of the Lift by your wireless transmitter or by some other signal source, such as a similar transmitter device: Turn the main power switch OFF (unlighted) *OR* turn the power off to the outlet supplying the Lift whenever the Lift is not in use!

Fig. 2

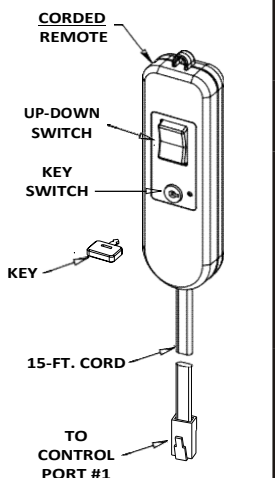

Fig. 3

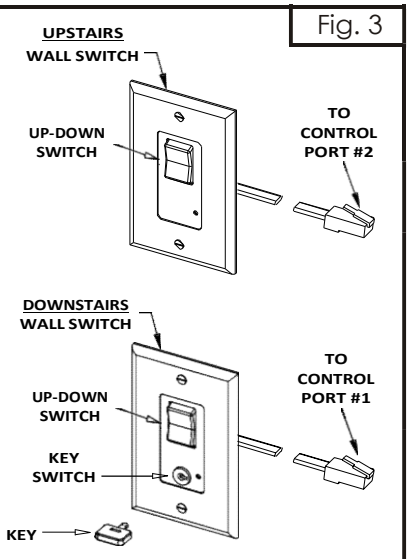

Fig. 4

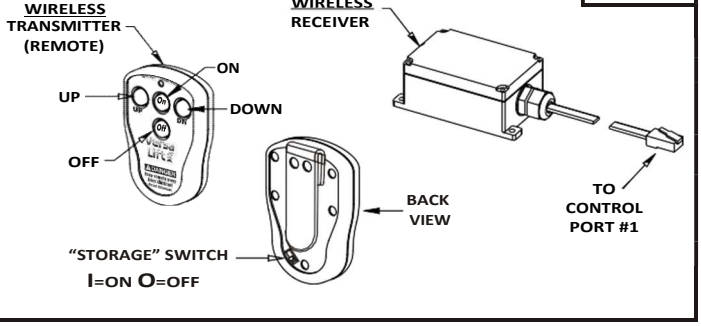

Versa Lift LOADING INSTRUCTIONS

5. LOADING THE LIFTING PLATFORM

The following figures illustrate incorrect loading practices in the left column and the correct loading practices in the right column. **Follow these basic rules when loading the lifting platform to avoid accidents or injuries:**

5.1. Always center the load on the platform (Figs. 5 & 6).
5.2. Always keep load inside the lifting frame (Figs. 7 & 8).
5.3. Never lift loads that are too wide (Figs. 9 & 10).
5.4. Never lift loads that are unstable (Figs. 11 & 12).
5.5. Never lift objects that can tip or roll off (Figs. 13 & 14).
5.6. Never exceed the load limit! **(200-lbs/model 24, 250-lbs/model 32)**

The lifting platform frame defines the limits of the load size. The load should NEVER extend outside the frame! If it does, it is likely to get caught on the edge of the lift opening. When this happens the load can be knocked off of the lift or the lifting platform can become jammed in the lift opening. Falling cargo can cause injury, become broken or crushed and the lift mechanism can be damaged or broken.

The best way to visualize the load is to view the loaded platform from one end as shown in Figs. 5 through 14. You should be able to sight from the inside edge of nearest end frame to the same edge on the furthest end frame all the way around the frame. If the cargo blocks the view of the further frame, then reposition the load until it passes this test or downsize the load.

Another method is to take a long mop or broom handle, hold it horizontal and pass it down the outside of the frame on all four sides. **It must not touch the cargo at any point!** This test can only be used when the lifting platform is down.

You are Responsible for Safe Loading!
These loading guidelines are intended to illustrate safe loading principles that you can apply to your individual loading problems. This manual cannot anticipate every loading situation you may encounter. YOU are responsible for using good judgement in operating this equipment. You must take the time to analyze each load for safety risks. Don't try to maximize loads on the platform. If you have any doubts, make two smaller loads rather than one big load. Place small or unstable items in a large stable container.

Fig. 5

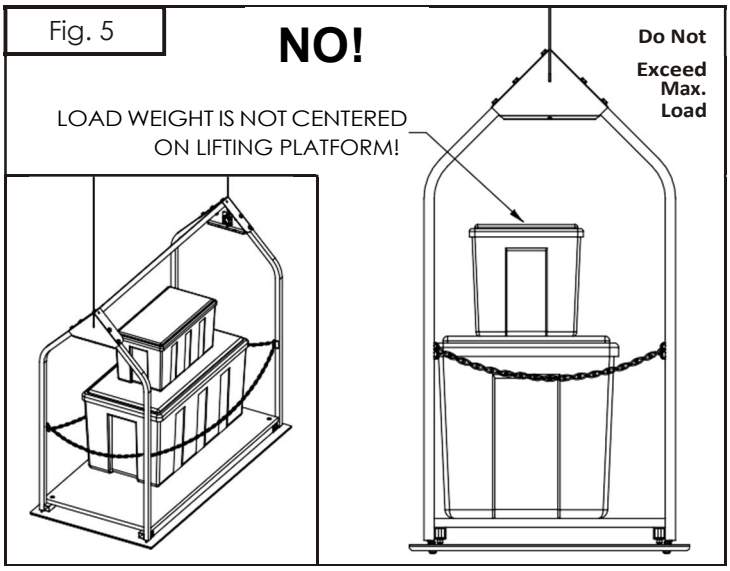

Fig. 6

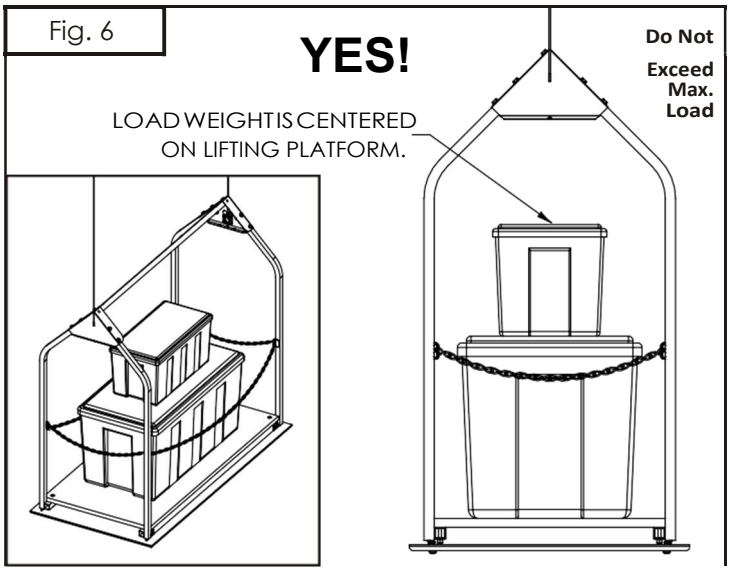

Fig. 7

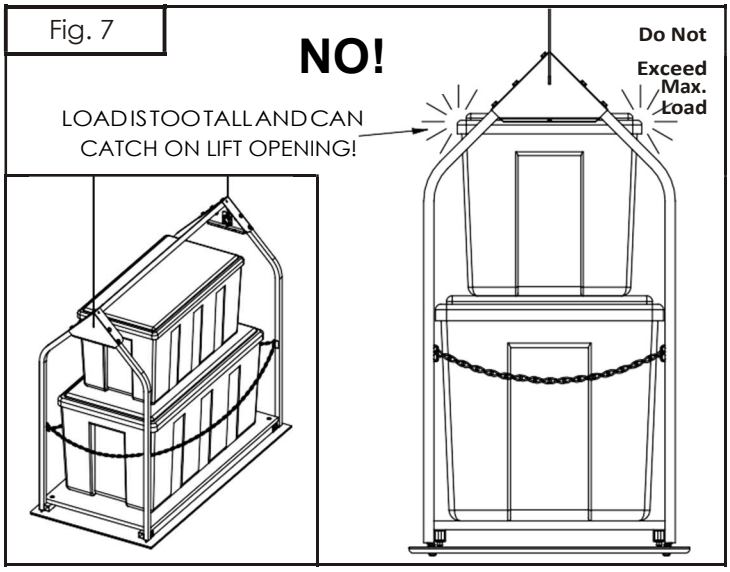

Fig. 8

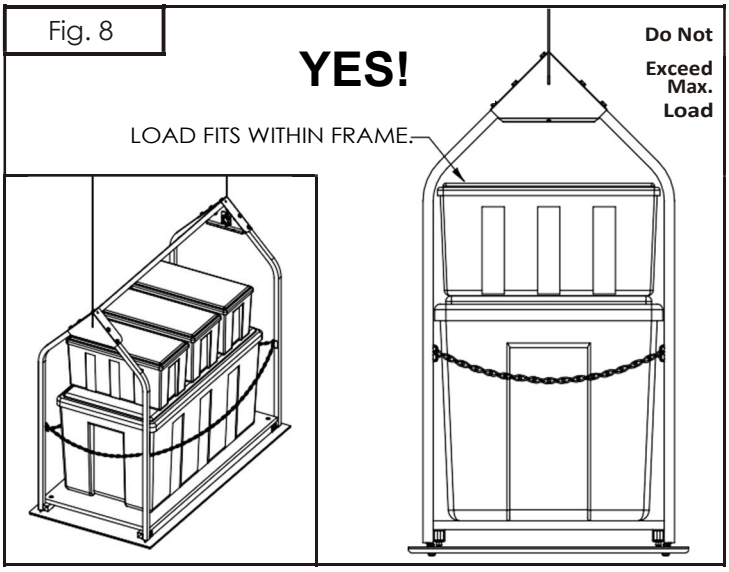

Versa Lift LOADING INSTRUCTIONS

IMPORTANT: Avoid accidents, expensive repairs or personal injury by observing the Versa Lift Safety Rules and using good judgement when loading the lifting platform and operating this product. (Max Load is 200-lbs/model 24, 250-lbs/model 32)

Fig. 9

NO!

LOAD IS TOO WIDE AND WILL CATCH ON LIFT OPENING!

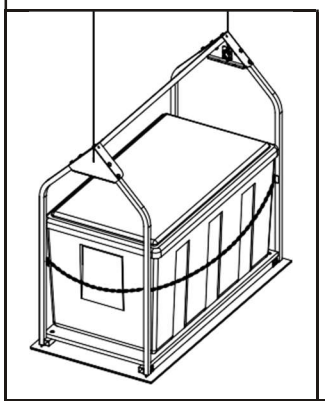

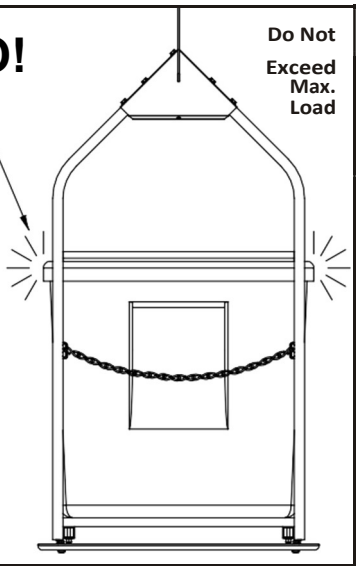

Do Not Exceed Max. Load

Fig. 10

YES!

LOAD FITS WITHIN FRAME.

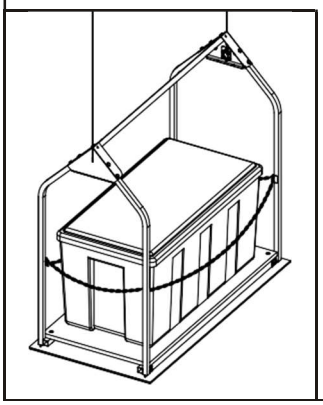

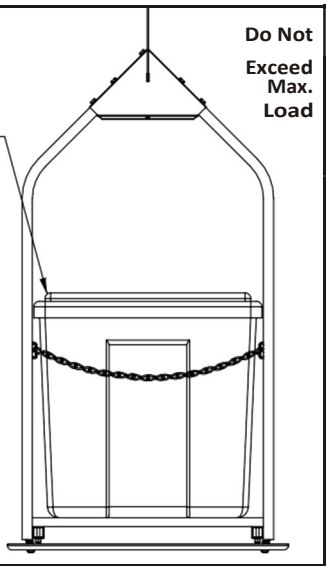

Do Not Exceed Max. Load

Fig. 11

NO!

LOAD IS NOT STABLE AND CAN FALL OFF!

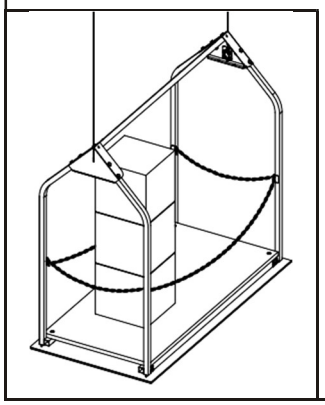

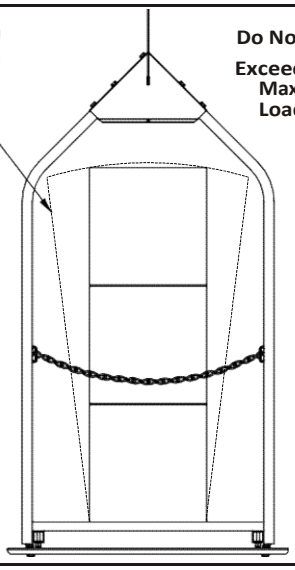

Do Not Exceed Max. Load

Fig. 12

YES!

LOAD IS STABILIZED.

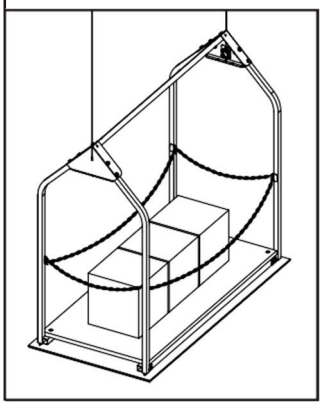

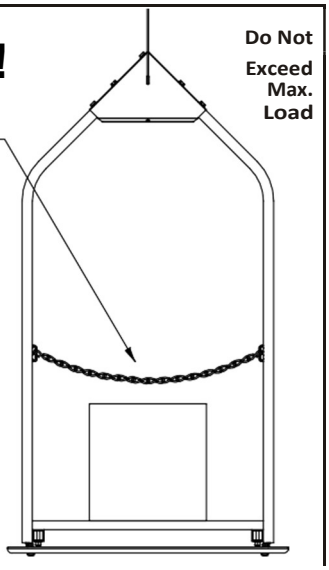

Do Not Exceed Max. Load

Fig. 13

NO!

LOAD IS NOT STABLE AND CAN FALL OFF!

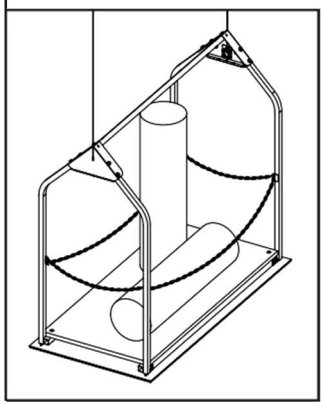

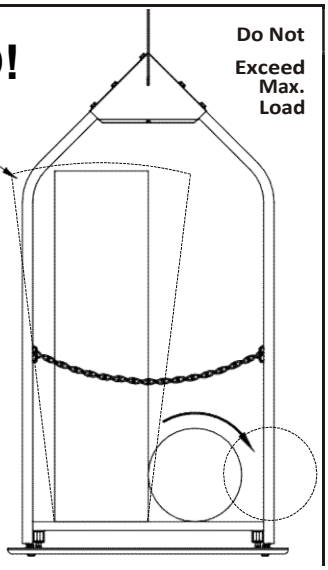

Do Not Exceed Max. Load

Fig. 14

YES!

PLACE UNSTABLE ITEMS IN A BOX BEFORE MOVING WITH LIFT.

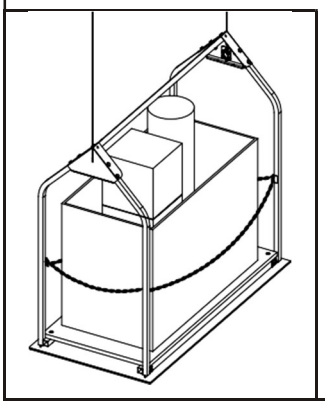

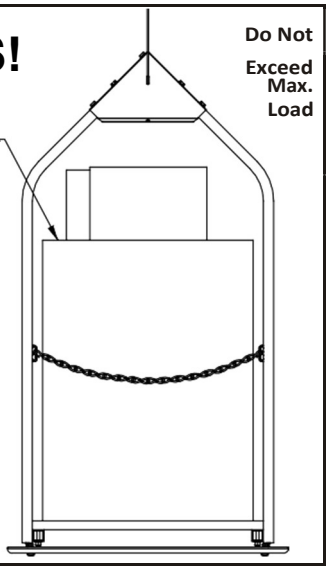

Do Not Exceed Max. Load

Versa Lift OPERATION

6. USING THE PLATFORM CHAINS

The platform is provided with chains that fasten to brackets on the four platform legs (Fig. 15). There are two long chains and two short chains. The two short chains can be attached permanently in the brackets by closing the links at each end. The two long chains should have one end of each chain permanently attached by closing one link and have the other end removable by leaving the second link open to form a hook (Fig. 15 Inset).

When loading the platform, one of the long chains need to be unhooked at one end so that cargo can be easily placed on the lifting platform. After un-hooking one of the long chains, always hook the end of the chain in one of the holes provided in the platform top brace (Fig. 15 lower inset).

NOTE: Do not drop the chain on the floor because if you forget to reconnect it, the chain can become jammed in the lift opening.

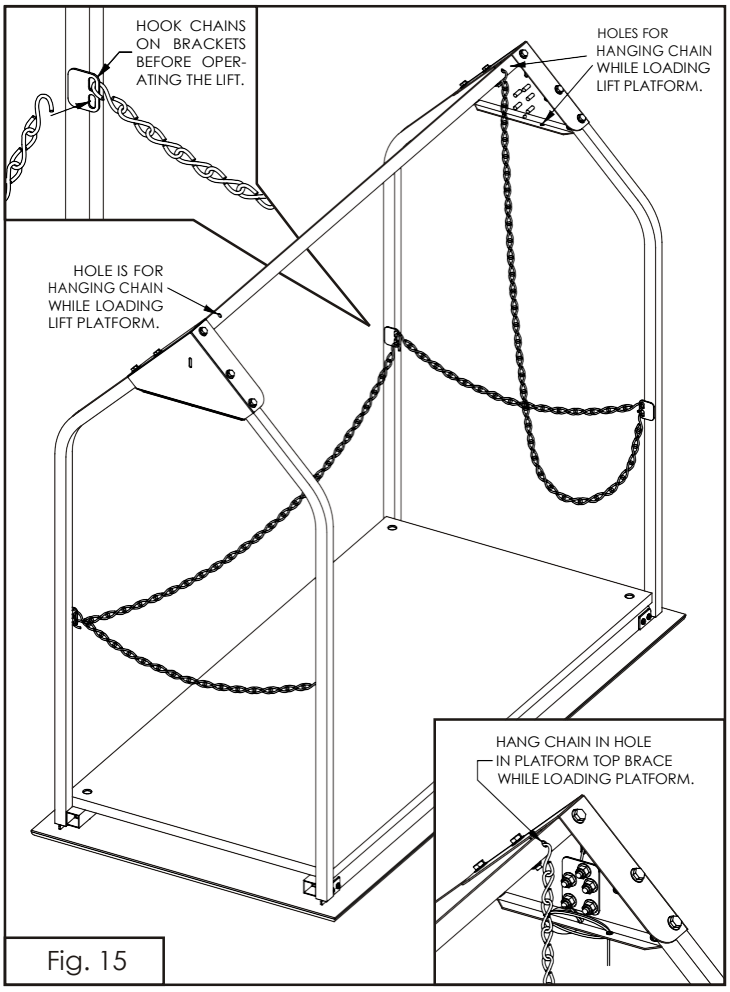

Fig. 15

7. THE LIFT OPERATING ZONE

The area directly under the lift from the opening to the lower floor is the "lifting platform operating zone" (Fig. 16). This area and the surrounding area must be kept clear to provide a work zone where you can load and unload storage items.
You must stand clear of the operating zone before operating the lift! It is the operator's responsibility to make sure others are well away from the lifting head and the operating zone before he or she operates the lift system!

You can place a rubber mat (or rubber-backed carpet) on the floor where the lifting platform rests in the down position (so long as it does not exceed 1/4" thickness). The mat will mark the "lifting platform operating zone" (Fig. 16) and can keep the platform from sliding on hard surfaces when it is being loaded.

NOTE: Never place anything taller than 1/4" between the lifting platform and the floor.

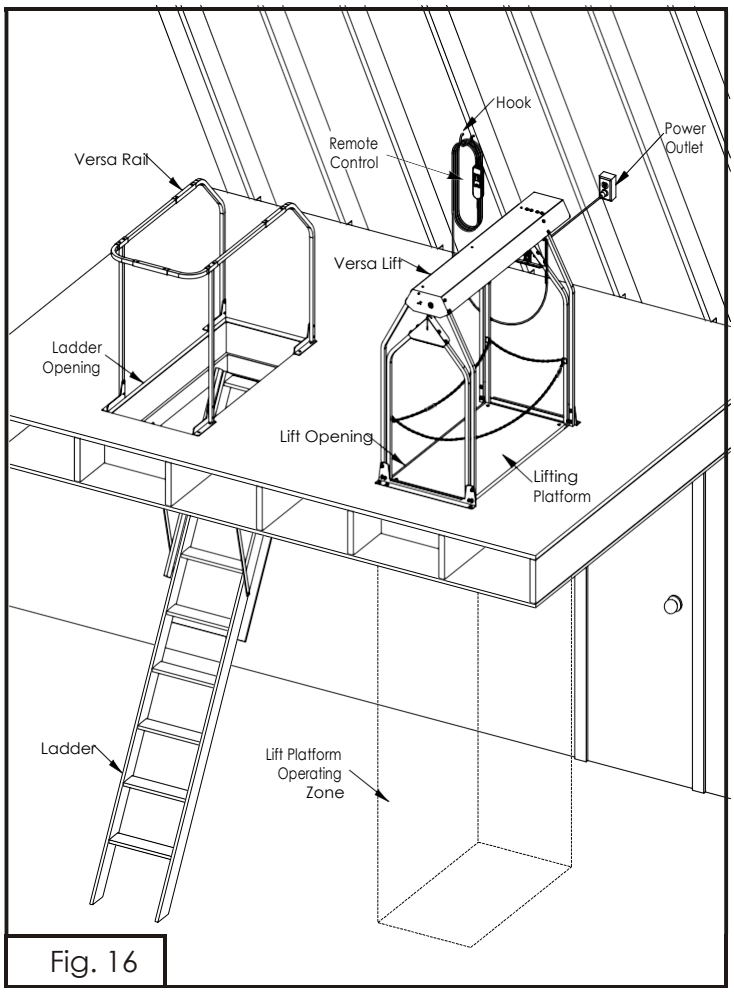

Fig. 16

WARNING To prevent unintended lift operation when not in use, you must turn the main power switch OFF, unplug the power cord, or disconnect the power. The wireless model radio is active if the lift has power and is turned ON and could operate the lift whenever a coded signal is received from the Versa Lift wireless transmitter or from another transmitter in your area. Unintended operation could cause the lifting platform to move downwards unexpectedly, possibly causing injury to persons or damage to property located directly under the lift.

8. CORDED REMOTE & WALL SWITCH Operation

Follow this step-by-step procedure for operating a Corded Remote Versa Lift to perform typical storage tasks. Note: In addition to these procedures, observe the Versa Operator Lift Safety Rules (page 3) and other safety precautions taught in this manual, such as correct platform loading, use of safety chains, and maintenance.

PROCEDURE A: MOVING STORAGE ITEMS DOWN

A-1. Go upstairs into the attic.
A-2. Turn **on** the **main power switch** under the lift head -OR- Turn **on** the attic light, if your lift is on the light circuit.
A-3. Load the lifting platform with items to move down.
A-4. **Corded Remote -** Take the remote down the ladder.
A-5. **Wall Switch -** Go down the ladder to the switch plate..
A-6. Unlock the control by inserting the key and turning it 90°.
A-7. Stand clear of the lift and press the **down** rocker switch.
A-8. WATCH the operating zone below while you lower the lifting platform to make sure no one walks below the lift.
A-9. Continue to press the **down** rocker switch until the platform comes to rest on the floor and the motor shuts off.
A-10. **Inspect your cables upon each use of the Versa Lift.** (See 12. Maintenance, Step 12.2).
A-11. Unload the lifting platform.
A-12. To move storage items up, follow Procedure B.
A-13. When you are finished, follow Procedure C.

PROCEDURE B: MOVING STORAGE ITEMS UP

B-1. Follow Procedure A to lower the lifting platform (if it is not already down).
B-2. Load the lifting platform with items to move up.
B-3. Look above to make sure no one is near lifting head.
B-4. Look below to make sure no one is near the platform.
B-5. Stand clear of the lift and press the **up** rocker switch to raise the platform. Continue to press the **up** rocker until the platform goes in the attic and motor shuts off.
B-6. Go upstairs and unload the lifting platform.
B-7. To move more items down, repeat Procedure A.
B-8. To move more items up, repeat Procedures A and B.
B-9. When you are finished, follow Procedure C.

PROCEDURE C: STORING THE LIFT

C-1. Follow Procedure B to raise the lifting platform to the attic.
C-2. Go upstairs and unload the platform, if needed.
C-3. **Corded -** Turn the key switch to lock. Store the remote and cord in a safe manner (see Fig. 16). If you have children in the home, remove the key and store it safely out of reach.
C-4. Turn **off** the **main power switch** under the lift head -OR-
C-5. Turn **off** the attic light, if your lift is on the light circuit.
C-6. Go downstairs.
C-7. **Wall Switch -** Turn the key switch to lock. If you have children in the home, remove the key and store it safely.

WARNING **Always raise the lifting platform to the highest position to close the lift opening when you are going to be working in the attic (upstairs) or when the Versa Lift is not in immediate use. Always turn off the main power switch. Store the key or wireless remote out of reach of children. Regularly inspect the Versa Lift for worn cables and damaged or loose parts (see section 12. Maintenance).**

9. WIRELESS REMOTE Operation

Follow this step-by-step procedure for operating the Versa Lift to perform typical storage tasks. Note: In addition to these procedures, observe the Versa Operator Lift Safety Rules (page 3) and other safety precautions taught in this manual, such as correct platform loading, use of safety chains, and maintenance.

PROCEDURE A: MOVING STORAGE ITEMS DOWN

A-1. Go upstairs into the attic.
A-2. Turn **on** the **main power switch** under the lift head -OR- Turn **on** the attic light, if your lift is on the light circuit.
A-3. Load the lifting platform with items to move down.
A-4. Go downstairs and get the wireless remote.
A-5. Set the slide switch on the back of the remote to **on (I)**, then press the **on** button for 2 seconds so indicator blinks.
A-6. Stand clear of the lift & press the **down** remote button.
A-7. WATCH the operating zone below while you lower the lifting platform to make sure no one walks below the lift.
A-8. Continue to press the **down** button switch until the platform comes to rest on the floor and the motor shuts off.
A-9. **Inspect your cables upon each use of the Lift.** (See section 12 Maintenance, Step 12.2).
A-10. Unload the lifting platform.
A-11. To move items up, follow Procedure B.
A-12. When you are finished, follow Procedure C.

PROCEDURE B: MOVING STORAGE ITEMS UP

B-1. Follow Procedure A to lower the lifting platform (if it is not already down).
B-2. Load the lifting platform with items to move up.
B-3. Look above to make sure no one is near lifting head.
B-4. Look below to make sure no one is near the platform.
B-5. Stand clear of the lift and press the **up** button switch to raise the platform. Continue to press the **up** rocker until the platform goes in the attic and motor shuts off.
B-6. Go upstairs and unload the lifting platform.
B-7. To move more items down, repeat Procedure A.
B-8. To move more items up, repeat Procedures A and B.
B-9. When you are finished, follow Procedure C.

PROCEDURE C: STORING THE LIFT

C-1. Follow Procedure B to raise the lifting platform to the attic.
C-2. Go upstairs and unload the platform, if needed.
C-3. Turn **off** the **main power switch** under the lift head -OR-
C-4. Turn **off** the attic light, if your lift is on the light circuit.
C-5. Go downstairs.
C-6. Set the slide switch on back of the remote to OFF (O).
C-7. Store the wireless remote. If you have children in the home, keep the remote in a safe place out of reach of children.

WARNING **Always LOOK before raising or lowering the lifting platform to be sure that other persons are clear of the lifting zone, the lifting platform and the lifting head. If you cannot see both above and below, ask someone to watch for you to tell you when it is clear & safe to operate the lift. To help avoid accidents read and follow the "Versa Lift Operator Safety Rules" on page 3 of this manual.**

10. OPERATION DUTY CYCLE

Under normal conditions (attic temperature below 100°F), the duty cycle for this equipment is **"2 minutes on / 4 minutes off."** This means that for each 2 minutes that the motor is running, it requires 4 minutes OFF for cooling. This is because the motor is fully enclosed.

When the attic temperature is 100°F or higher, **it is not recommended that you enter the attic or operate the lift.** However, if you choose to operate the lift above 100°F, the duty cycle should be reduced to 2 min. on / 8 min. off.

Note: This motor is equipped with an internal thermal switch. When the motor becomes overheated, the switch will disable the motor until it cools down inside, then the switch will close, allowing the motor to operate again. Depending on attic temperature, it may take 15 minutes or more for the thermal switch to reset. To avoid activating the thermal switch again, provide more off-time for cooling or wait until the attic is cooler.

11. STANDARD (corded) REMOTE STORAGE

The remote control and 15-ft cord should be stored in a safe manner. Do not leave the cord or remote on the floor where it can be stepped on or tripped over. Also, do not store it where it can become tangled in the lift or attic door mechanisms. A hook, peg or strap installed near the lift provides a suitable means to store the remote and cord (Fig. 17). You can also hang the cord from a hook on your Versa Rail so it is within easy reach when you lower the ladder (see Fig. 17 Inset).

⚠WARNING **Take care not to damage the remote cord. Never pass the remote control cord under the lifting head, between the housing or platform legs, or through the lift opening! Store the cord carefully after use.**

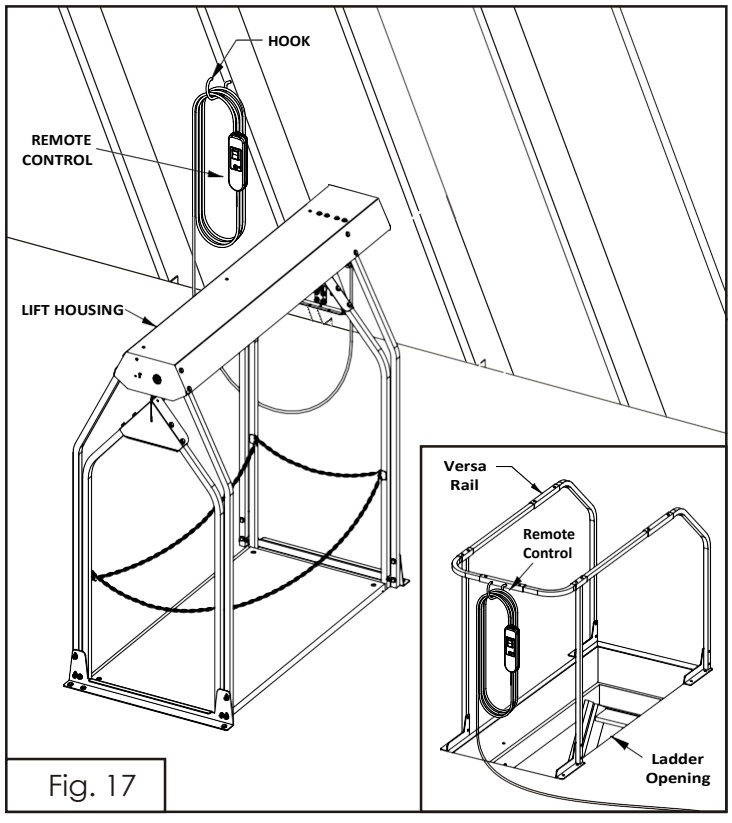

Fig. 17

12. VERSA LIFT MAINTENANCE

This product is durable and permanently lubricated. Maintenance consists mostly of regular, careful inspections as follows:

INSPECTION BEFORE EACH USE:

12.1. Check the power cord and remote control cord for wear or damage. If any is found, do not use the lift until the worn or damaged cord is replaced.

12.2. Inspect the cables for wear before each use: Lower the lifting platform all the way to the floor (Fig. 18) by following the Operating Procedures on page 9. Carefully inspect the cables for any frayed or broken filaments, kinks or knots. Start by looking immediately under the lifting head where the cables exit the slots in the bottom of the head (Fig. 19). With your eyes only, inspect the cables as far down toward the platform as you can see (do not lean into the opening). Go downstairs and inspect the cable from the bottom, starting from the cable clamps inside the platform frame, (Fig. 20) through the slots in the corner of the frame and then up the cables toward the lifting head as far as you can see. If you should observe any frayed or broken filaments, kinks or knots, or other damage, immediately stop using the lift and call 405-516-2412 to arrange replacement of the cables. **Warning: It is dangerous to operate the lift with any damaged or worn cables!**

INSPECTION EVERY 3 MONTHS:

12.3. Carefully inspect all fastener connections. If any screws, bolts or nuts appear loose, damaged, or missing do not use the lift until the problem is corrected.

12.4. Carefully inspect the lift housing, housing legs and mounting rails for any cracked or bent parts. If any parts are cracked, bent, loose or missing, do not use the lift until all problems are corrected and damaged parts replaced.

12.5. Lower the lifting platform and while it is on the lower floor, carefully inspect all legs, brackets, and fasteners. If any parts are cracked, bent, loose or missing, do not use the lift until all problems are corrected and damaged parts replaced.

12.6. Perform a careful inspection of the cables (follow 12.2. above). Carefully inspect the cable when it is fully extended. Look from above and from below. There must be no frayed or broken strands and no kinks or knots. If any of these problems are observed, immediately stop using the lift until the cable has been replaced.

IMPORTANT! **WARNING**

WATCH FOR SIGNS OF LIFT MALFUNCTION:

A. If the lift motor and platform do not stop instantly when the platform contacts the floor or the upper limit switch;

B. If the platform moves upward while the DOWN button is pushed - or - downward when the UP button is pushed:

C. If the Down Limit Over-Run Breaker trips more than once:

This means a limit switch has failed or is malfunctioning!

If A, B or C happens, STOP USING THE LIFT IMMEDIATELY and contact us for service. IT IS NOT SAFE to operate the Versa Lift until any malfunction has been corrected!

Call us at 405-516-2412 for assistance.

Versa Lift CABLE INSPECTION

WARNING **BEFORE EACH USE, lower the lifting platform all the way and inspect the cables from top to bottom. Look for any frayed or broken filaments, kinks, or knots. If any wear or damage is found, do not operate the lift until cable has been replaced.**

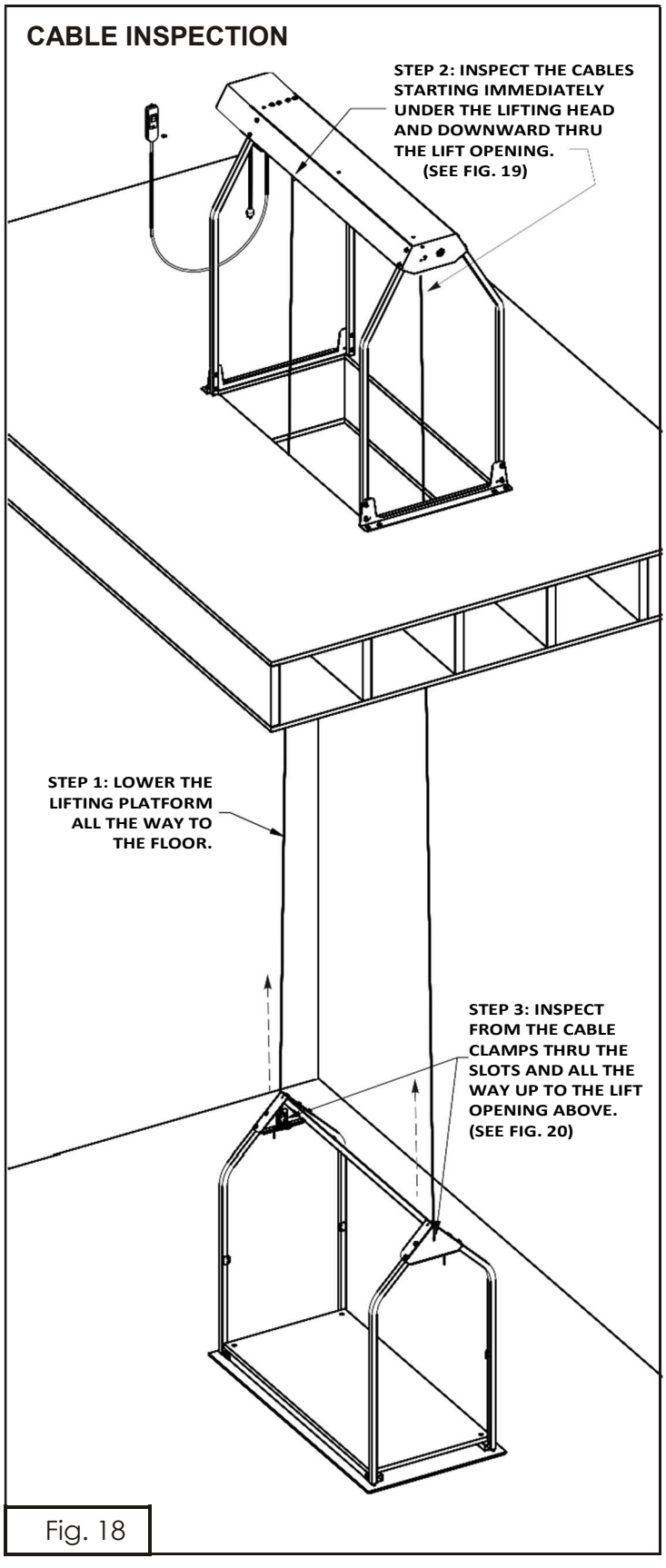

Fig. 18

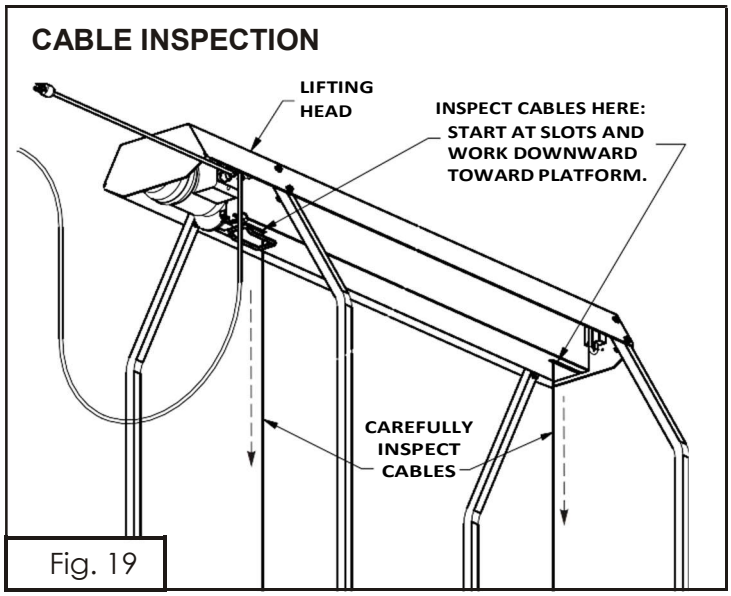

Fig. 19

INSPECT YOUR CABLES BEFORE EVERY USE FOR DAMAGE OR WEAR:

Lower the platform to inspect the cables from the underside of the lifting head (Fig. 19) all the way down through the slot in the lifting platform frame (Fig. 20).

(See Step 12.2 for complete procedure.)

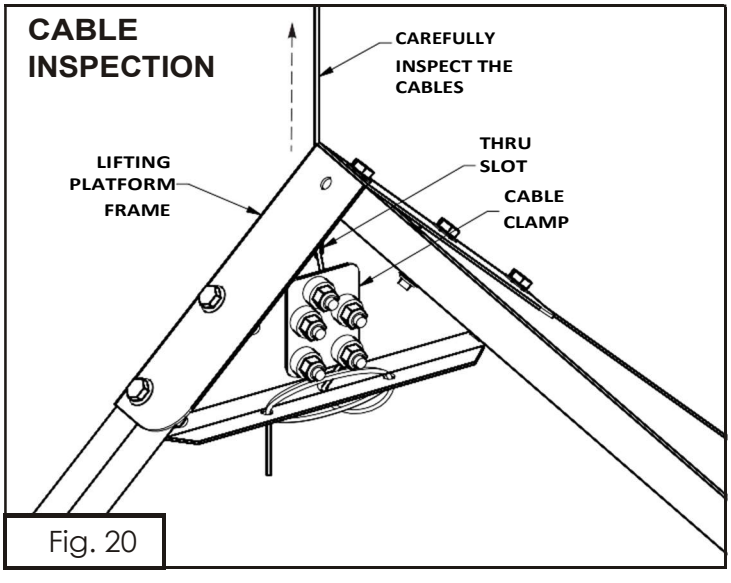

Fig. 20

13. TROUBLESHOOTING

Use the following guide to help diagnose any problems you are having with your Versa Lift. **Note:** If you did not install this product yourself or if you lack the skill, strength, or ability to make the recommended adjustments, you should contact us to make arrangements to have these troubleshooting procedures performed for you.

13.1. If you have been actively operating the lift and it stops working, it may have just overheated (see section ***10. Operation Duty Cycle***), let it cool for 10-15 minutes and try it again.

13.2. If you just go to use the lift and it doesn't operate: Check to see if the lift power cord is plugged in. Plug another electrical device into the same outlet to check if it is getting power; make sure the main power switch is in the ON position and lighted; for corded remote and wall switch, make sure the key switch is ON ; for wireless remote, make sure the slide switch on the back is ON and the green indicator is flashing at the top of the remote. Now, try the up button and the down button again.

13.3. If your lift went up, but will not come down: Check 13.1 above for overheating. Check 13.2 for power. Check 13.6 to make sure the over-run breaker has not tripped. Check 13.7 to see if your platform is jammed in the opening.

13.4. If your lift has the corded remote or wall switches and doesn't operate when you press the up or down rocker switch: Check everything in 13.1, 13.2, 13.3, then check to make sure the "Power" indicator on your switch pad is lighted. This tells you if your **main power switch** is on. Check your key switch is rotated to the unlocked position (where key won't come out). Try the rocker switch again.

13.5. **If your lift is a wireless model and stops responding** to the up and down buttons, check to make sure the power switch under the rear of the lift housing is on (lighted). Check the slide switch on the back of the transmitter is set to ON (I). The indicator on the front should flash green when the ON button is pushed for 2 seconds. If the indicator is weak or does not light with these steps, replace the batteries with brand new AAA alkaline cells. Annual replacement is recommended for best performance. *See page 14 for more wireless information.*

13.6. IF YOUR LIFT WILL NOT GO DOWN: If your lift was working, but now will not go back down again, check the down limit "**over-run breaker**" illustrated in Fig. 21. Push straight in (firmly) on the red button. Now try to run the lift platform in the down direction. If it runs down now, it means that your down limit switch failed to stop the lift motor when the platform reached the floor and that tripped the over-run breaker switch. The down limit **over-run breaker** prevents the cables from being wound up backwards and possibly damaging to your lift. If the breaker trips again, **Do Not continue to use the lift until this malfunction has been corrected! The cause for this problem is that the down limit switch is either defective or not being activated**. The down limit switch must detect a release of tension in the cables (slack) when the platform lands on the downstairs floor and then stop the motor. (If your cables were not attached to the platform with it sitting directly on the floor or your platform can't come into full contact downstairs floor, then the cables won't get slack to trigger the down limit switch.) If the down limit fails, the over-run breaker is triggered to prevent back-winding the lift cables. Call us for assistance in resolving this problem.

13.7. LIFTING PLATFORM STILL WON'T GO DOWN - Remember: the down limit switch operates whenever the cable goes slack. If the platform hangs up in the lift opening or is wedged between the mounting rails, the cable will go slack when you try to run the platform down and the motor won't run in down direction. Your platform may be stuck in the opening or hanging up on something. Review sections ***11. Adjust the Mounting Rails*** and ***12. Center the Lift Housing*** on pages 17 & 18 of the ***Installation Guide***. Readjust (re-center) the platform between the mounting rails leaving about 1/8" free movement side-to-side (Section 11). Center the lift housing over the opening (Section 12). Now move the lifting platform to the highest position and try lowering it down through the lift opening, first with the platform empty. Then load the platform with some weight and try again. Review the loading instructions detailed in section ***5. Loading the Lifting Platform.*** Loaded items must fit within the confines of the lifting platform frame and the load should be balanced (centered) on the lifting platform. Make sure the load is not hanging up in the opening.

If the platform goes down a little way and stops, it may be hanging up on something inside the opening, try to find out why. Try to lower the platform out of the lift opening so that you can inspect the side-walls. Review ***Lift Opening Requirements*** on pg. 4 & 5 of the ***Installation Guide***, then check your opening for squareness and correct size. Are the sidewalls smooth and perpendicular? Is the opening free of any brackets? Are all nail and screw heads set flush or below the surface? Is the sheet rock flush to the opening? Are the opening dimensions correct? Have you installed the 2"x2" flashing (wear strips) in the corners of the opening? Any of these problems can cause the lift platform to hang in the opening and if discovered, they must be corrected.

If these steps do not resolve the problem and the platform continues to hang up in the opening, stop using the lift and contact us: 405-516-2412.

13.8. THE LIFT MAKES A LOUD NOISE - If the lift won't run when you push the button, but makes a loud buzzer noise, you could have a bad rocker switch in your corded remote control handle. You can get a new rocker switch by contacting us. 405-516-2412

If the lift runs up or down, but is very noisy, then try to determine the source and type of the loud noise. The lift gear-motor normally makes a sonorous sound, like an electric can opener, only louder because it is enclosed in a large metal housing. This is normal. However, if you hear any loud clanking, knocking or grinding sounds during operation of the lift mechanism, these could indicate a malfunction and should be investigated by your dealer or by a qualified technician. If you need assistance, contact us.

13.9. IF YOUR LIFT MOTOR DOES NOT STOP INSTANTLY:

A. When the platform is raised all the way up and lifts the upper limit switch lever, the lever should not hit the winch cover. The plat-form top rail must stop about 1" from the winch cover (see Fig. 21);

B. Does not stop instantly when it lands the downstairs floor;

C. Goes up when you push the down button;

D. Goes down when you push the up button:

Any of these conditions indicate a severe malfunction of the lift system. Immediately stop using the lift until this condition has been corrected.

If you have tried these troubleshooting measures and your lift still won't operate contact us for assistance.

To contact: call 405-516-2412

IMPORTANT! WARNING

WATCH FOR SIGNS OF LIFT MALFUNCTION:

A. If the lift motor and platform do not stop instantly when the platform contacts the floor or the upper limit switch;

B. If the platform moves upward while the DOWN button is pushed - or - downward when the UP button is pushed:

C. If the Platform Top Rail is up against the Winch Cover:

D. If the Down Limit Over-Run Breaker trips more than once:

This means a limit switch has failed or is malfunctioning!

If A, B, C or D happens, STOP USING THE LIFT IMMEDIATELY and contact us for service. IT IS NOT SAFE to operate the Versa Lift until any malfunction has been corrected!

Call 405-516-2412 for assistance.

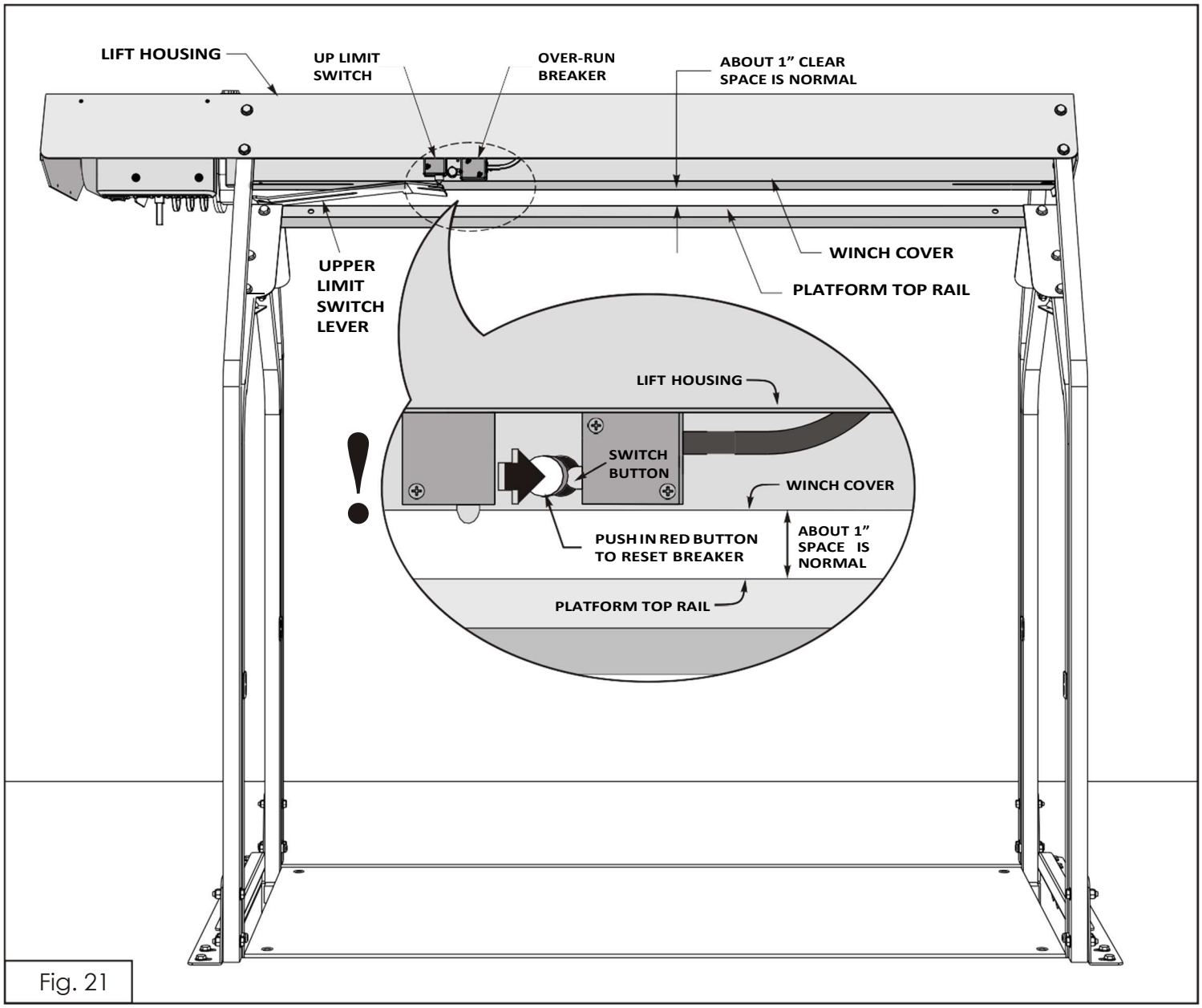

Fig. 21

14. WIRELESS REMOTE OPERATION

The ***wireless receiver*** and ***remote transmitter(s)*** are **"paired"** together at the factory. Each transmitter transmits a unique code. Each receiver can be paired with multiple transmitters.

A storage switch on the back of the transmitter connects the battery when ON (I), or disconnects the battery when OFF (O). The front of the wireless remote has four momentary switch buttons. The middle two buttons turn the remote ON or OFF. When the ON button is pushed, the indicator will flash green. The transmitter turns off automatically when not used for 3-4 minutes.

The left button on the remote is UP. When the UP button is pressed, the cables will be wound up, raising the lifting platform to the highest position, where it will stop when it trips the upper limit switch. When the upper limit switch is tripped, the UP button on the remote will be disabled.

The right button on the remote is DOWN. When the down button is pressed, the lift cables will be wound out until the lifting platform contacts the lower floor surface and trips the lower limit switch that senses slack in the cables. When the down limit switch is tripped, the down button on the remote will be disabled.

Note: If your transmitter fails to operate the Lift:

- Check the Lift is plugged in and the power switch is ON and lighted.
- If you have two transmitters, one must be OFF when the other is ON.
- Check that the storage switch is set to ON (I).
- Check the ON button is pushed and the green indicator is flashing.

For dependability, install **new** AAA batteries every year (fresh from the store, not from a drawer!). Remove 5 screws on transmitter back to change batteries (see **Transmitter Back View** below.)

For more troubleshooting information, go to Section 13 on page 12 of the *Versa Lift Owners Manual* for more possible remedies.

15. PAIRING A TRANSMITTER TO THE RECEIVER

Each receiver ships already paired with a transmitter. The receiver can be paired with multiple transmitters. If you purchased a second transmitter after installing your lift, or replaced a broken transmitter, you will need to pair the new transmitter to the receiver.

Steps to pair a new or second transmitter:

! ***To pair a second transmitter, the first one must be turned off!*** **!**

STEP 1: Remove the screws and the cover from the receiver. **STEP 2:** Set the storage switch on back of transmitter to ON "**I**". **STEP 3:** Press the transmitter **ON** button so green indicator flashes.

STEP 4: Press the **Function "F"** button for one second. One LED will light steady red. Then press the **Select "S"** button for one second. Five LEDs will light red showing receiver is now in "learn mode." (The receiver will stay in the learn mode for 10 seconds.)

STEP 5: Press the transmitter **"UP" and "DN"** buttons **at the same time**, and hold until the five LEDs flash twice showing the transmitter is paired with the receiver. Release the buttons and the LEDS will flash one more time to signal exiting the learn mode.

STEP 6: Test the operation to make sure the UP and DN buttons operate the lift in the correct directions.

STEP 7: If the lift operates correctly, replace cover and 4 screws. ***If the UP and Down buttons do not operate the lift correctly, you will need to repeat the pairing procedure steps 2 thru 7.***

NOTE: Only one transmitter can control the receiver at any given time. So, you must turn off the first transmitter to switch control of the receiver to the second transmitter.

TO CLEAR ALL PAIRINGS: Press the **"F"** button for 1 second then press the **"S"** button and hold it down at least 8 seconds (all LEDs will light, then go out). All transmitters are now erased from memory. Repeat steps 2 thru 7 above to re-pair each transmitter.

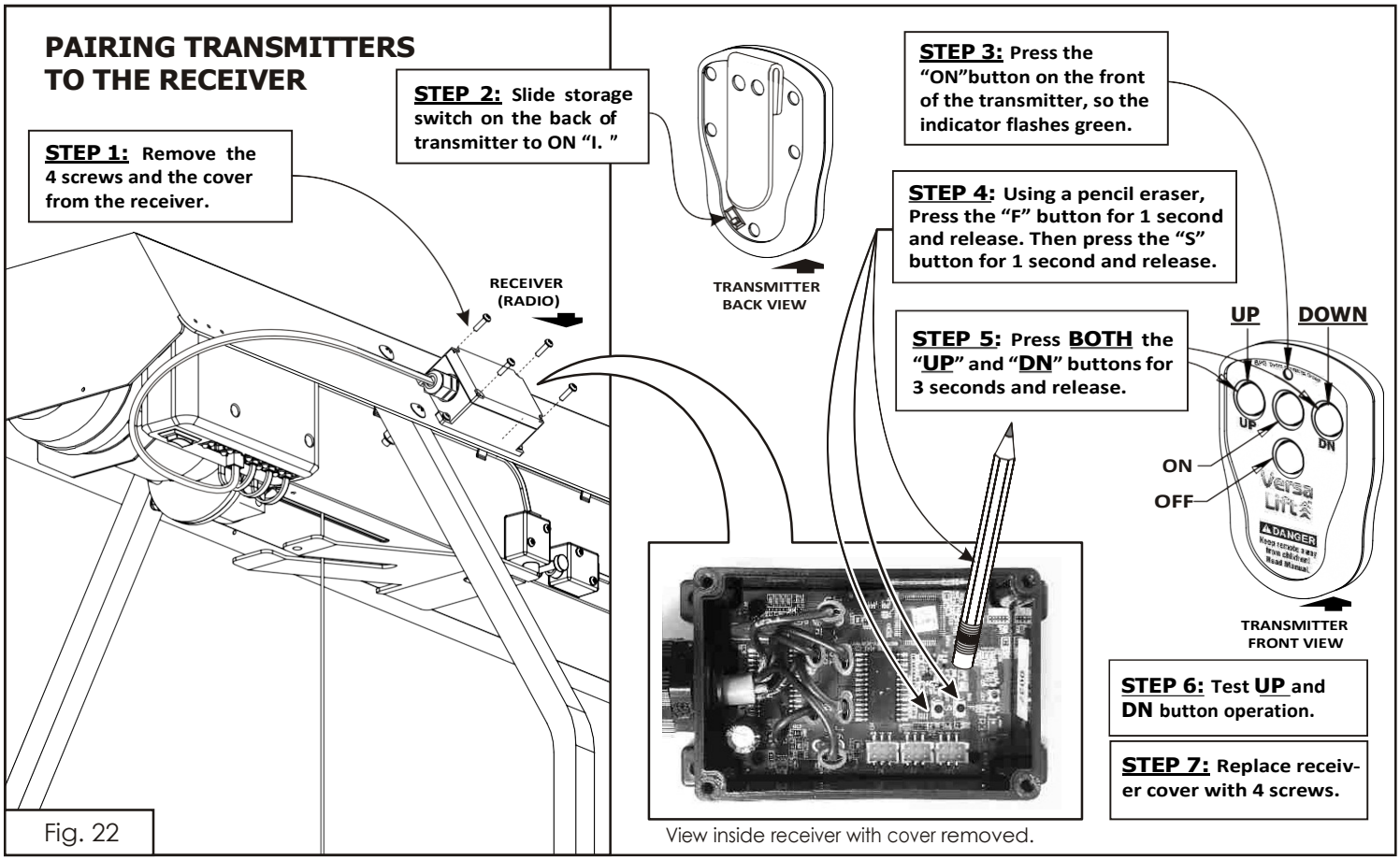

Fig. 22

PARTS LOCATION
Models 32

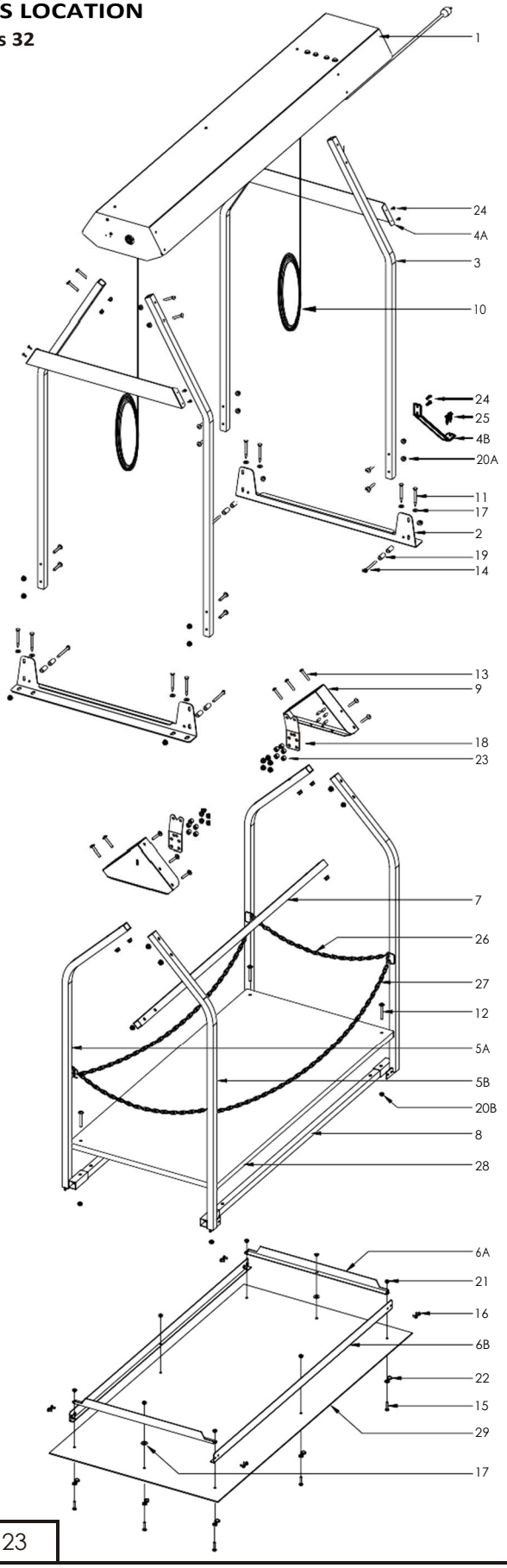

Fig. 23

1. Versa Lift 32 Housing Assembly (1)
2. Mounting Rails (2)
3. Lift Housing Legs (4)
4A. Housing Leg Braces (2)
4B. Housing Leg Stabilizers (2)
5A. Left Platform Legs (2)
5B. Right Platform Legs (2)
6A. Short Door Braces (2)
6B. Long Door Braces (2)
7. Platform Top Brace (1)
8. Platform Supports (2)
9. Platform Leg Brackets (2)
10. Cable (Std, H, HX) (1)
11. 1/4" x 2-1/2" Lag Screw (8)
12. 1/4-20 x 2" Truss Head Phillips Screw (4)
13. 1/4-20 x 1-1/2" Truss Head Phillips Screw (26)
14. 1/4-20 x 2-1/2' Round Head Phillips Screw (4)
15. 10-32 x 5/8" Pan Head Phillips Screw (8)
16. 10-32 x 3/8" Pan Head Phillips Screw (8)
17. 1/4 x 1" Flat Washer (8)
18. Cable Clamps (2)
19. ½ x 1" Nylon Guide Spacer (8)
20A. Tall 1/4-20 Flanged Locknut (36)
20B. Short 1/4-20 Locknut (5)
21. 10-32 Locknut (8)
22. Screw Cover (8)
23. ½" Dia. Cable Clamp Spacer (10)
24. #8 x 1/2" Drill Point Screws (12)
25. #12 x 1" Phillips SM Screws (4)
26. Short Chains (2)
27. Long Chains (2)
28. Platform Panel (1)
29. Door Panel (1)
30. Installation Guide (1)
31. Owners Manual (1)

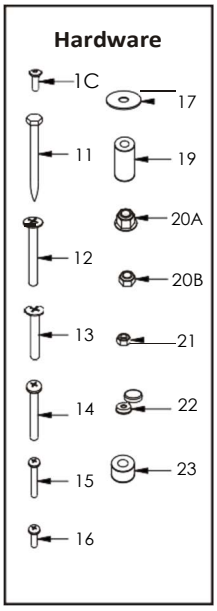

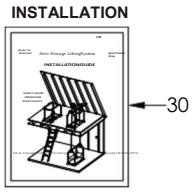

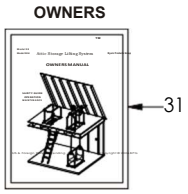

PLEASE READ THE FOLLOWING CAREFULLY

The manufacturer and/or distributor has provided the parts diagram in this manual as a reference tool only: neither the manufacturer nor distributor makes any representation or warranty of any kind to the buyer that he or she is qualified to make any repairs to the product or that he or she is qualified to replace any parts of the product. In fact, the manufacturer and/or distributor expressly states that all repairs and parts replacements should be undertaken by qualified technicians and not by the buyer. The buyer assumes all risks and liability arising out of his or her repairs to the original product or replacement parts thereto, or arising out of his or her installation of replacement parts thereto.

The proper way to operate your new Versalift after it has been installed and tested....

1. Always press the down button the ENTIRE time allowing the Versalift to come to a stop automatically when it comes to rest on the floor.
2. Always press the up button until the lift stops on it's own up in the attic. The lift will shut itself off when it arrives flush with the attic floor.

This practice allows the lift to maintain the cable around the cable drum properly insuring a trouble free operation for years to come.

Do Not lower the lift onto a box, workbench, pickup bed or at waist/knee height to unload. This can cause the cable to wind up backwards creating an issue with the cable around the drum.

Put your load in the center of the lift, or stacked as evenly as you can to insure a smooth operation.










NOTICE: The VersaLift is available in 1 of 3 Switching Methods.

1. **Corded (Standard Series)**
2. **Wireless Remote ("W" Series)**
3. **Mounted Wall Switches ("M" Series) (2)**

You CANNOT HAVE A CORDED and a WIRELESS or MOUNTED it is either/or. You CAN upgrade at any time.

Versa Lift Corded Remote Control Kit

CORDED REMOTE CONTROL KIT INSTRUCTIONS:
These instructions are supplemental only! To avoid system damage: FIRST, please follow every step in the ***Versa Lift Installation Guide*** Steps 1 thru 9.2!

DO NOT CONNECT these controls until you have completed EVERY installation step 1 thru step 9.2. In **"STEP 9.2 PLUG IN YOUR CONTROL DEVICE"** you will be told to connect these controls.

9.3. Corded Remote Control Kit Contents:
-Handheld Remote Control with 15ft Remote Cord with Plug (1)
-6-32 x 1/4" Phillips Screws (2)
-Cord Clamp strain relief (1)

THEN FOLLOW THESE INSTRUCTIONS:

9.4. Connect the Remote Cord Plug
Insert the remote cord plug into Control Port #1 (Fig. 1a).

9.5. Secure your Remote Cord to the Lift Head
Use two 6-32 x 1/4" screws to mount the Cord Clamp to the Lift Head, securing the cord against strain (Fig. 1b inset). Take care to center the cord under the clamp as you tighten the screws. This clamp will help prevent damage to your lift motor driver board if the remote cord is accidentally pulled on to hard.

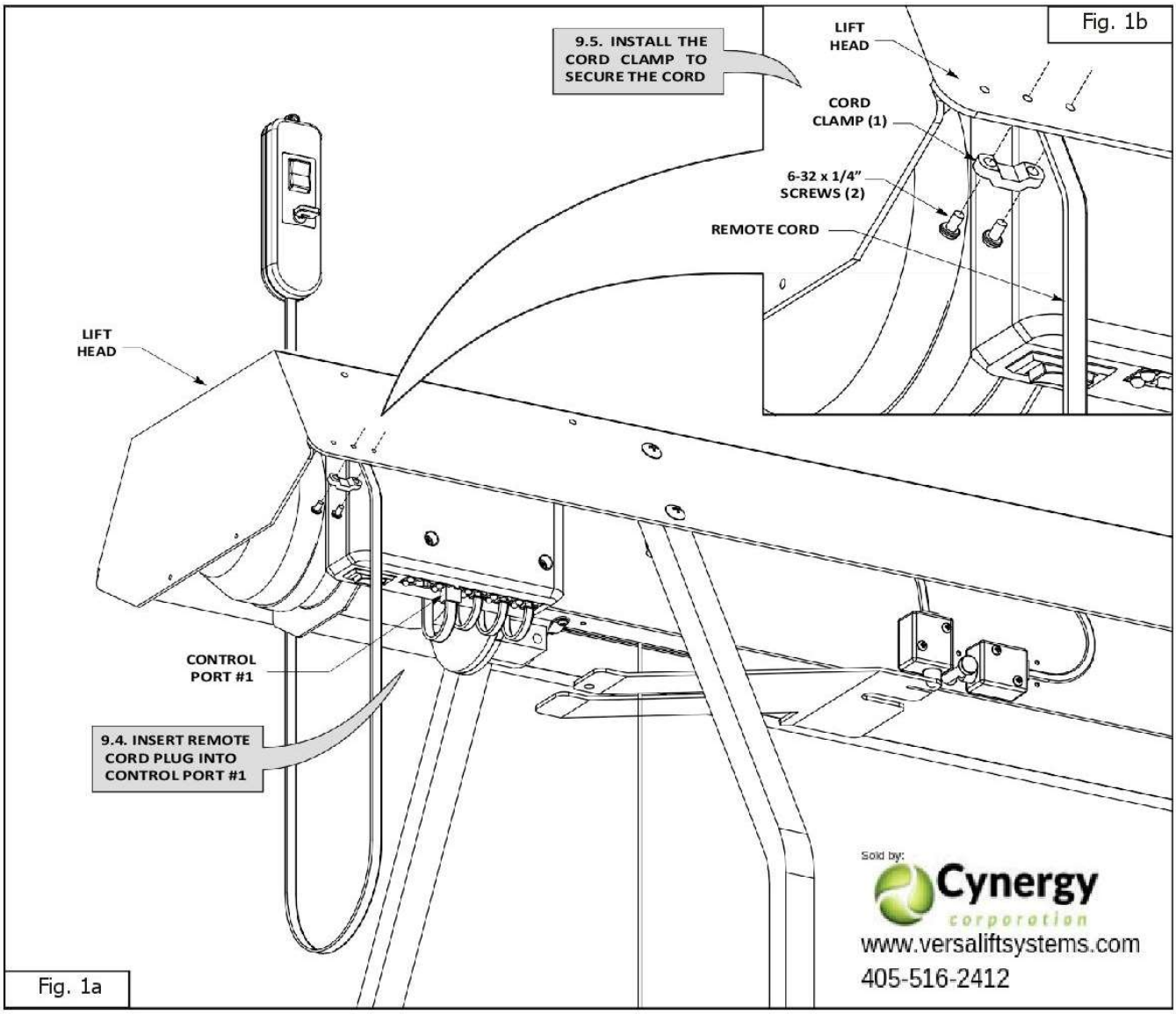

Fig. 1b

Fig. 1a

Versa Lift Mounted Wall Switch Control Kit

MOUNTED WALL SWITCH CONTROL KIT INSTRUCTIONS:

These instructions are supplemental only! To avoid system damage: FIRST, please follow every step in the *Versa Lift Installation Guide* Steps 1 thru 9.2!

DO NOT CONNECT these controls until you have completed EVERY installation step 1 thru step 9.2. In "STEP 9.2 PLUG IN YOUR CONTROL DEVICE" you will be told to connect these controls.

↓ ↓ THEN FOLLOW THESE INSTRUCTIONS ↓ ↓

9.3. Mounted Wall Switches Control Kit Contents:

- Non-Locking Switch Plate (1)
- Key-Locking Switch Plate (1)
- 6-32 x ½" Flat Head Phillips Screws (4)
- Wall Plates with Screws, White (2)
- 10-ft. Upstairs Control Cord (1)
- 50-ft. Downstairs Control Cord (1)

9.4. Install the Non-Locking Wall Switch Upstairs
Plug the 10-ft control cord into the non-locking switch plate. Install the non-locking switch plate into an single gang wall box **upstairs** using two 6-32 x ½" flat head phillips screws (Fig. 1a). Tighten the screws lightly!

9.4. Install the Key-Locking Wall Switch Downstairs
Plug the 50-ft control cord into the key-locking switch plate. Install the key-locking switch plate into a single gang wall box **downstairs** using two 6-32 x ½" flat head phillips screws (Fig. 1b). Tighten the screws lightly!

9.6. Plug in the Upstairs Wall Switch
Install the plug for the **upstairs** wall switch (10-ft.) control cord into the Lift Head **control port #2** (Fig. 1c).

9.7. Plug in the Downstairs Wall Switch
Install the plug for the **downstairs** wall switch (50-ft.) control cord into the Lift Head **control port #1** (Fig. 1c).

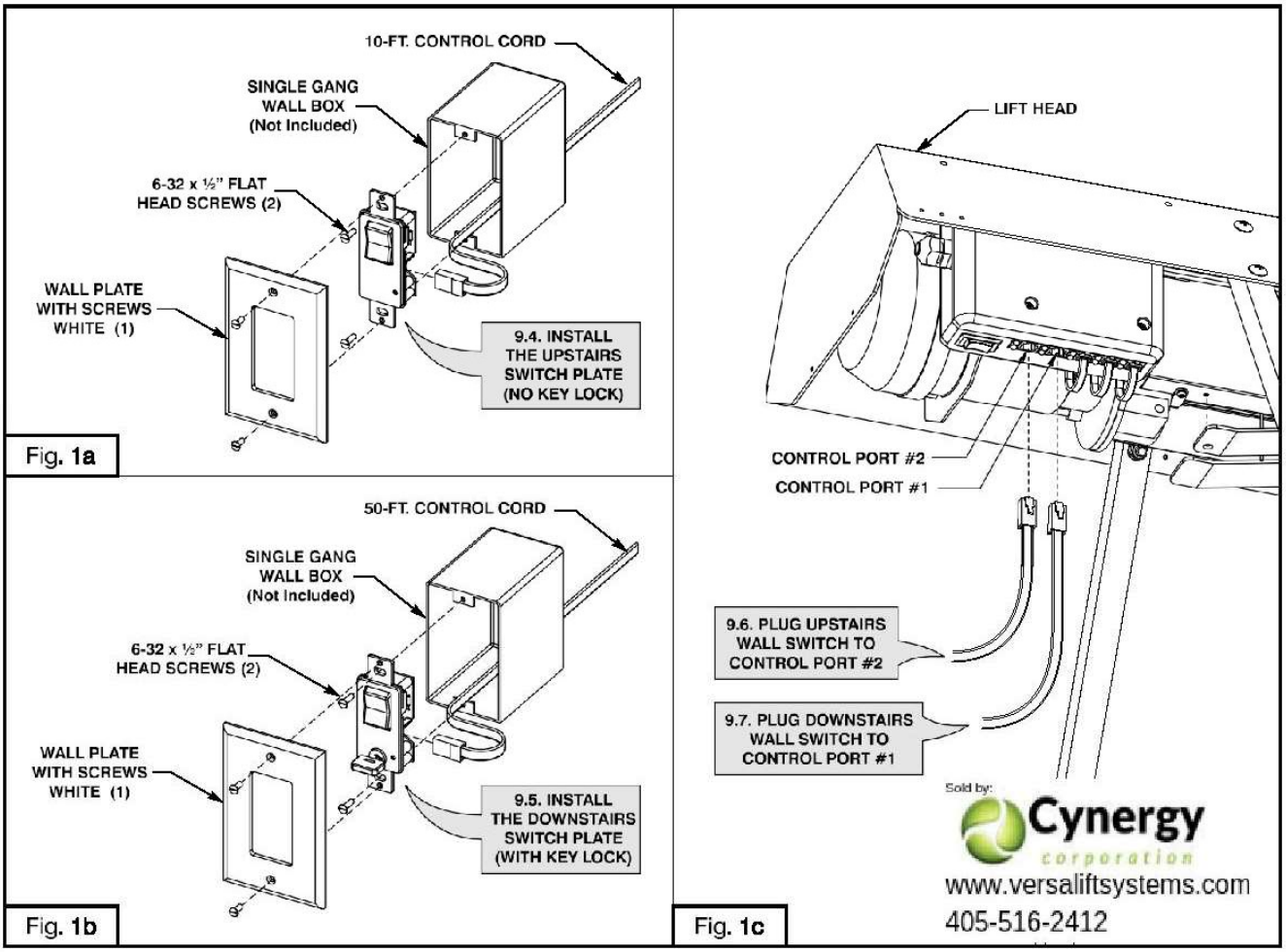

Versa Lift *Panther* Wireless Transmitter & Receiver

WIRELESS CONTROLS KIT INSTRUCTIONS:

These instructions are supplemental only! To avoid system damage: FIRST, please follow every step in the *Versa Lift Installation Guide* Steps 1 thru 9.2!

DO NOT CONNECT these controls until you have completed EVERY installation step 1 thru step 9.2. In "STEP 9.2 PLUG IN YOUR CONTROL DEVICE" you will be told to connect these controls.

→ → THEN FOLLOW THESE INSTRUCTIONS → →

9.3 Wireless Controls Kit Contents:

- Transmitter Remote (1)
- Wireless Receiver with Plug (1)
- 6-32 x 5/16" Phillips Screws (2)

9.4. Mounting your Wireless Receiver

Use the two 6-32 x 5/16" screws to mount the receiver in one of three locations on the Lift Head (Fig. 1b).

9.5 Connect the Receiver Plug

Install the receiver plug into Control Port #1 (Fig. 1b).

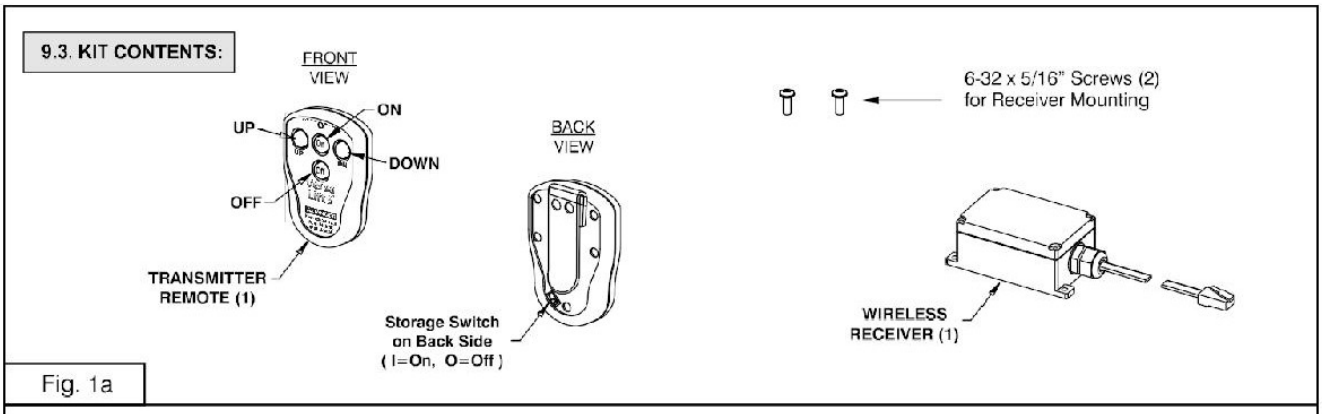

Fig. 1a

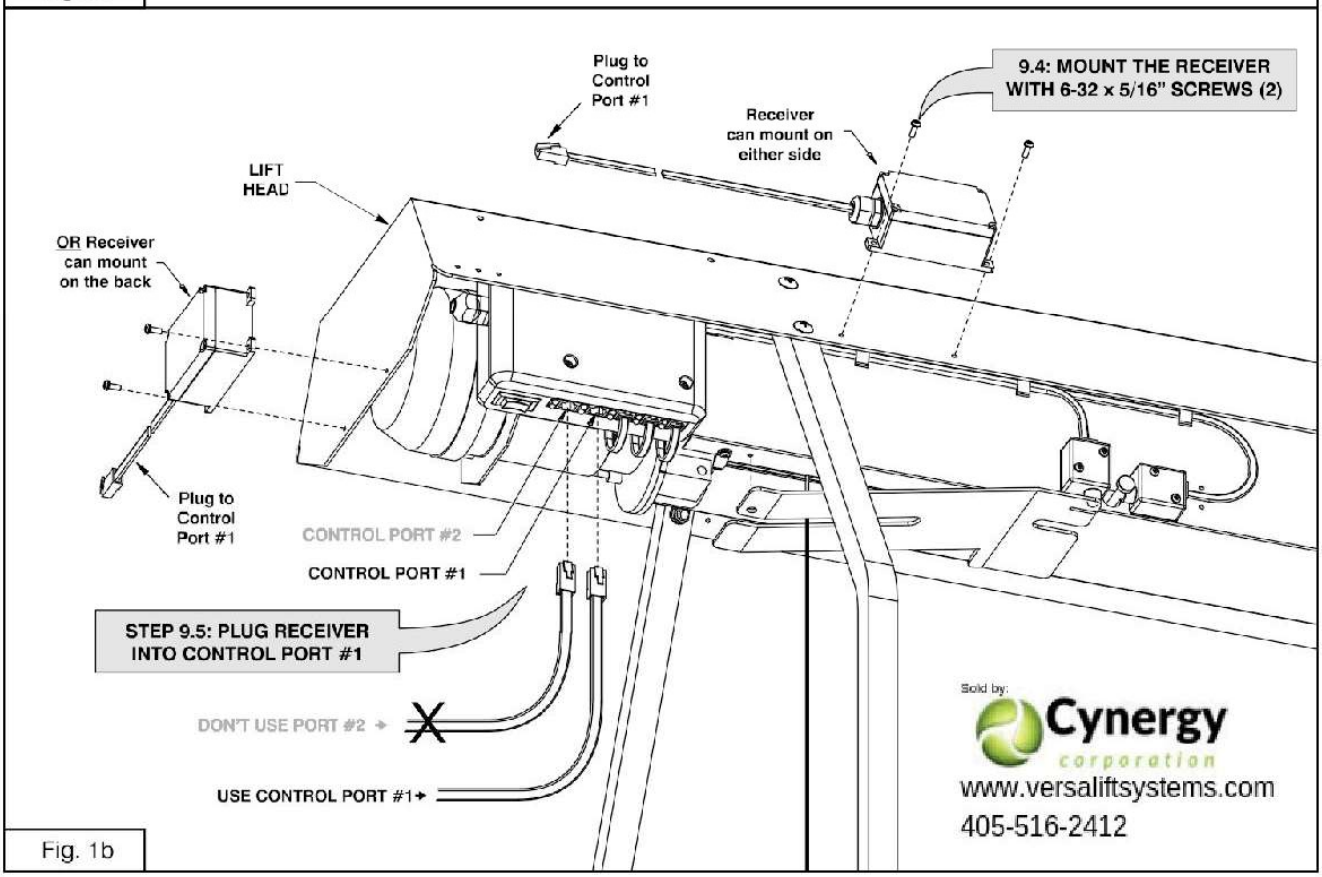

Fig. 1b

Versa Lift *Panther* Wireless Transmitter & Receiver

9.6. WIRELESS REMOTE OPERATION

The ***wireless receiver*** and ***remote transmitter(s)*** are **"paired"** together at the factory. Each transmitter transmits a unique code. Each receiver can be paired with multiple transmitters.

A storage switch on the back of the transmitter connects the battery when ON (I), or disconnects the battery when OFF (O). The front of the wireless remote has four momentary switch buttons. The middle two buttons turn the remote ON or OFF. When the ON button is pushed, the indicator will flash green. The transmitter turns off automatically when not used for 3-4 minutes.

The left button on the remote is UP. When the UP button is pressed, the cables will be wound up, raising the lifting platform to the highest position, where it will stop when it trips the upper limit switch. When the upper limit switch is tripped, the UP button on the remote will be disabled.

The right button on the remote is DOWN. When the down button is pressed, the lift cables will be wound out until the lifting platform contacts the lower floor surface and trips the lower limit switch that senses slack in the cables. When the down limit switch is tripped, the down button on the remote will be disabled.

Note: If your transmitter fails to operate the Lift:

- Check the Lift is plugged in and the power switch is ON and lighted.
- If you have two transmitters, one must be OFF when the other is ON.
- Check that the storage switch is set to ON (I).
- Check the ON button is pushed and the green indicator is flashing.

For dependability, install **new** AAA batteries every year (fresh from the store, not from a drawer!). Remove 5 screws on transmitter back to change batteries (see **Transmitter Back View** below.)

For more troubleshooting information, go to Section 13 on page 12 of the *Versa Lift Owners Manual* for more possible remedies.

9.7. PAIRING A TRANSMITTER TO THE RECEIVER

Each receiver ships already paired with a transmitter. The receiver can be paired with multiple transmitters. If you purchased a second transmitter after installing your lift, or replaced a broken transmitter, you will need to pair the new transmitter to the receiver.

Steps to pair a new or second transmitter:

! ***To pair a second transmitter, the first one must be turned off!*** !

STEP 1: Remove the screws and the cover from the receiver.

STEP 2: Set the storage switch on back of transmitter to ON **"I"**.

STEP 3: Press the transmitter **ON** button so green indicator flashes.

STEP 4: Press the **Function "F"** button for one second. One LED will light steady red. Then press the **Select "S"** button for one second. Five LEDs will light red showing receiver is now in "learn mode." (The receiver will stay in the learn mode for 10 seconds.)

STEP 5: Press the transmitter **"UP" and "DN"** buttons **at the same time,** and hold until the five LEDs flash twice showing the transmitter is paired with the receiver. Release the buttons and the LEDS will flash one more time to signal exiting the learn mode.

STEP 6: Test the operation to make sure the UP and DN buttons operate the lift in the correct directions.

STEP 7: If the lift operates correctly, replace cover and 4 screws. ***If the UP and Down buttons do not operate the lift correctly, you will need to repeat the pairing procedure steps 2 thru 7.***

NOTE: Only one transmitter can control the receiver at any given time. So, you must turn off the first transmitter to switch control of the receiver to the second transmitter.

TO CLEAR ALL PAIRINGS: Press the **"F"** button for 1 second then press the **"S"** button and hold it down at least 8 seconds (all LEDs will light, then go out). All transmitters are now erased from memory. Repeat steps 2 thru 7 above to re-pair each transmitter.

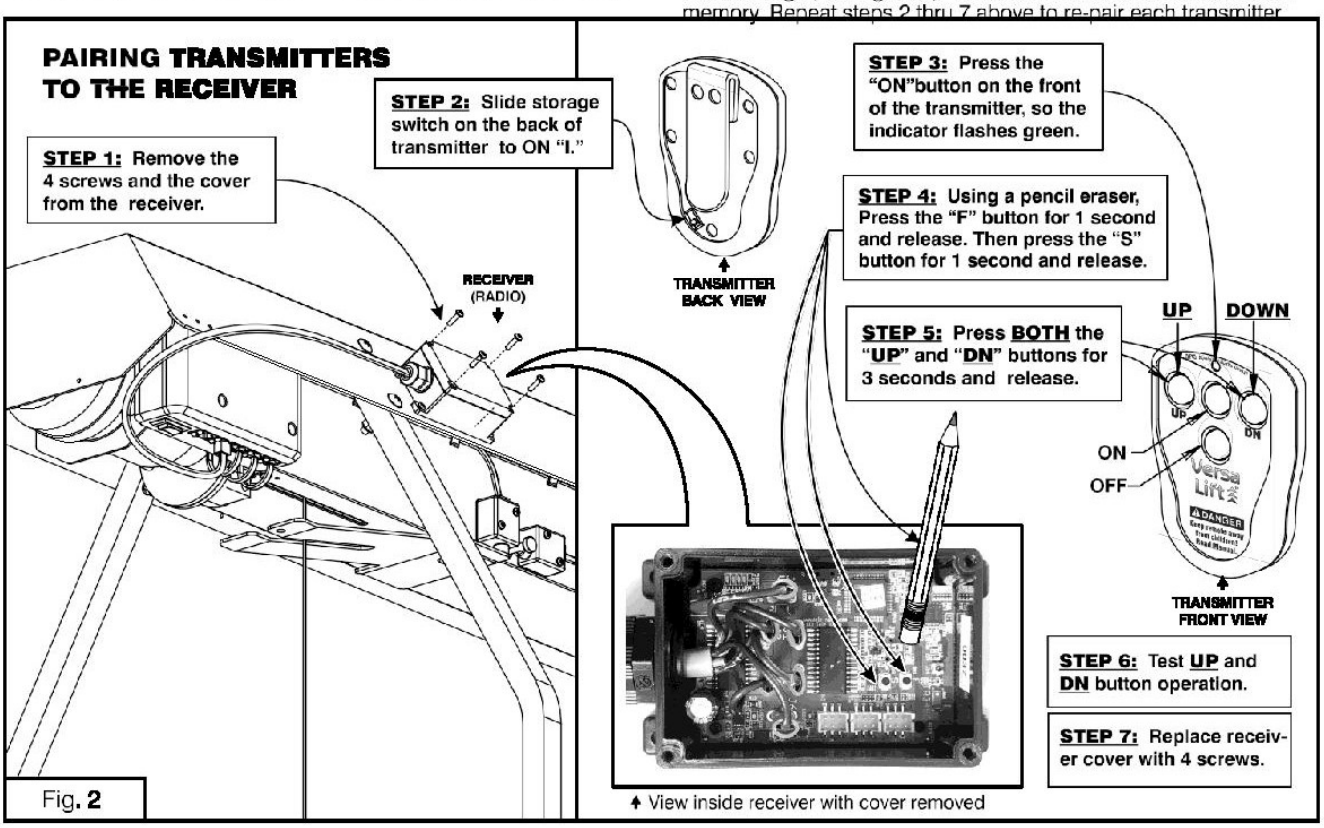

Fig. **2**