

Vuelift

Residential Elevator (with Micro-6 Controller)

Installation Guide

Acrylic Models

savaria

Disclaimer

Savaria Concord Lifts, Inc. disclaims liability for any personal injury or property damage resulting from the operation of a product that has been modified from the original Savaria design. No person or company is authorized to change the design of this product without written authorization by Savaria.

Standard notations

The following notations may be used throughout this guide to emphasize important safety information, mechanical concerns, and other important information. Please review and follow all of these messages.

NOTICE

Notations provide information such as reminders, warnings, or additional guidelines that do not fit into the flow of the installation.

CAUTION

Indicates potential problematic situations that could result in damage to the product.

WARNING

Indicates a potentially hazardous situation that, if not avoided, could result in serious injury or death.

ELECTRICAL SHOCK HAZARD

Do not connect or disconnect wiring while the power is on. Before servicing, disconnect all power to the equipment.

Savaria is not responsible for any modifications of the product made by the user. Do not allow unqualified personnel to use equipment. Failure to comply could result in death or serious injury. Maintenance, inspection, and replacement of parts must be performed only by authorized personnel familiar with installation, adjustment, and maintenance.

DANGER

Be aware that during the installation, service and maintenance of this equipment, you could or will be exposed to unsafe crushing, shearing and falling hazards.

IMPORTANT - APPLICABLE CODES

You must ensure that your installation conforms to all local codes and standards including the applicable electrical, building, and elevator/lift codes.
Each region will use a specific year of the code and it is the responsibility of the installing company to confirm which year of the code is applicable.
For the Vuelift, the following elevator/lift codes apply:

- ASME A17.1 1996, Part 5
- ASME A17.1/CSA B44 2000, Section 5.3
- ASME A17.1/CSA B44 2004, Section 5.3
- ASME A17.1 2004, Addendum 2005, Section 5.3
- ASME A17.1/CSA B44 2007, Section 5.3
- ASME A17.1/CSA B44, Addendum 2008, Section 5.3
- ASME A17.1/CSA B44 2010, Section 5.3
- ASME A17.1/CSA B44 2013, Section 5.3
- ASME A17.1/CSA B44 2016, Section 5.3
- ASME A17.1/CSA B44 2019, Section 5.3

TOOLS AND MATERIALS REQUIRED

Mandatory Common Tools

- 2 and #3 Phillips head screwdrivers
- 3/8" - 1/2" flat head screwdrivers
- Electronics screw driver (terminal screw driver) - 2 mm and 3 mm tips required
- Cordless hand drill with a 1/2" drill chuck
  - 5/16" magnetic nut driver for attachment to variable speed drill
  - Carbide drill bit set (varying sizes from 1/16" - 1/2")
- Variable speed hammer drill
  - 1/4" bit mandatory
  - 3/8" bit optional, but recommended
- 10" (250mm) medium cut metal file (recommended getting both a coarse and fine metal file)
- Extension cord (minimum 14ga, sufficient length to work on site)
- Allen wrenches (Imperial & Metric)
- 2x plumb bobs and line
- Large rubber mallet or dead blow hammer (with a non-marking head)
- Laser plumb bob (e.g. Bosch GPL 2 R)
- 2x four foot - magnetic level accurate to 1/8" / 50 ft (having two is best to ease in plumbing the rails)
- Torpedo level
- 2 rolls of wide blue painters tape (3 rolls required for jobs 4 stop or more)
- Electrical tape
- 12" long 1/4" extension for bits (without a wide release head)
- Set of mechanical sockets and wrenches (1/4"- 1" Imperial)
- Tape measure
- Electrical multi-meter
- Wire strippers
- Wire tie wraps (zip-ties)
- Pry bar
- Vise-grip pliers
- Taps, drill bits for taps and tap handle for the following tap:
  - 8-32 NC
  - 10-24 NC
  - 1/4-20 NC
  - 3/8-16 NC
  - 5/16-24 NC
- Gasket shear
- C-clamps
- Quick clamps x2 (i.e. Irwin Quick-Grip)
- Ratchet straps x2 (15-foot length)
- Drop sheets to cover the work area
- 2x P-tools (P/N 320649) or 1 P-Tool (P/N 320649) and 1 Temp Run Buttons (P/N 200438-C)
- 4 1/2" angle grinder with cut-off wheels, grinding discs and flap (sanding) discs
- T-square or carpenter's square

Mandatory Specialty Tools

- Hoist or chain block - 1000 lbs capacity
- Rivet gun with 1/8" rivet head
- Low RPM chop saw and blade (i.e. Evolution 14" Steel Cutting Chop Saw part# EVOSAW380). The RPM of the saw should be between 1350 and 1800 RPM.
- Lifting slings (steel cable or nylon strap, minimum 2" width, rated for a minimum of 2000 lbs). The number of straps is dependent on individual site specifications. Typically, 3-4 straps will be required, but more may be required if the unit is taller than 3 stories.

Mandatory Acrylic Specific Tools

- Router (i.e. Makita model # RT0701C) - if acrylic is to be cut on site ONLY
- 1/2" x 1" carbide tipped 3-flute flush trim bit (to cut acrylic)
- Acrylic repair kit
  - 320, 400 and 600 grit sandpaper
  - Polishing wheel
  - Novus #3 and Novus #2 plastic polish

Optional Tools (may be required depending on site conditions)

- 3/8" variable speed right angle drill (depending on site conditions)
- Laser plumb bob (e.g. Bosch GPL 2 R)
- Scaffolding or ladders and planks for erection of rails and brackets (height is dependent on individual site specifications)
- Miter saw with non-ferrous metal cutting blade
- Fluted countersink

NOTICE

Crew and job site must be available to work 10-12 hours daily if required.

If possible, take a photograph of the damaged part(s).

Revision history of this guide

- September 30, 2019 – Initial release of the Installation Guide specific to Micro-6 Acrylic models (latest car design)
- October 10, 2019 – Added notes re: chain block/winch as needed
- October 28, 2019 – Corrected skewed drawing on page 81
- October 30, 2019 – Changed P/N for this installation guide to 001124-M6-19
- October 31, 2019 – Added NOTE on page 111/112 re: removal of wooden shipping blocks
- November 22, 2019 – Revised drawing on page 80
- December 12, 2019 –Revised drawings on pages 13 and 15; Changed 3 inches to 2 inches on page 84
- January 8, 2020 –Revisions on pages 78, 81, 85, 86 and 87
- February 27, 2020 – Revisions on pages 14, 15, 76 and 82
- March 4, 2020 – Added head assembly junction box for remote controller on page 88; Added note to tools list on next page; Added new Appendix E - Savaria Link Option on page 173
- March 20, 2020 – Revised tools on page 3; Added rope guards on page 88; Revised/added various photos throughout; Removed obsolete troubleshooting section from Appendix D
- April 14, 2020 – Revised tool list on page 3
- April 21, 2020 – Added new step on page 10; Revised step on page 15; Revised step on page 24; Added step to shim Xtronics lock (if needed) on page 107
- May 8, 2020 – Revised gate switches on pages 149 and 150
- June 2, 2020 – Added optional triangular controller information on page 95
- June 12, 2020 – Added new door operator procedure for RAM only starting on page 158 (chains instead of belts)
- June 19, 2020 – Revised landing positions procedure starting on page 122
- July 2, 2020 – Added OSG tests on page 161
- July 30, 2020 – Added danger warning on this page; Added warnings on page 101; Revised drawing on page 102
- November 20, 2020 - Revised wording to add clarity on page 118
- January 27, 2021 - Added mid-floor acrylic installation procedure on page 138; revised rail types throughout
- March 4, 2021 - Added photo and note to page 79
- May 26, 2021 - Revised the "HEAD ASSEMBLY INSTRUCTION" procedure.
- July 23, 2021 - Added "Install Reset Switch"
- July 27, 2021 - Revised page 14 and page 15
- September 20, 2021 - Revise page 135
- July 7, 2022 - Added Cleaning Appendix
- February 28, 2023 - Revised step on page 171
- May 24, 2023 - Revised Drive train installation on page 9
- August 31, 2023 - Revised encoder installation on page 98
- September 25, 2023 - Revised Installation verification on page 173
- October 24, 2023 - Added Site Preparation checklist on page 5, added revision number
- November 23, 2023 - Revisions throughout document
- January 18, 2024 - Revised Maintenance Schedule on page 163
- March 1, 2024 - Revised note on page 107, added Appendix G
- September 30 2024 - Added Appendix H
- October 29-2024 - Revised graphic on page 113
- April 3, 2025 - updated Motor cover installation
- October 29, 2025 - Update page 120
- May 20, 2026 - Revised step 40 on page 98. Revised step 45 on page 106, updated format

Toll free (800) 791-7999
Fax (905) 791-2222
www.savaria.com

savaria

Site Preparation Checklist
Vuelift Round -OR- Octagonal Acrylic

Vuelift Elevators CANNOT be installed without ALL of the following items completed. Prior to any onsite installation team arriving, Vuelift requires that the following items be completed:

- **FInished Floors Completed**
  - Prior to elevator installation beginning, finished floors MUST be installed at all landing levels as the landing rings sit on top of the finished floor.
- **230V Power with Fused Disconnect**
  - Quantity 1: Permanent 230V, single phase, 30 ampere dedicated power to a lockable fused (cartridge type) disconnect switch.
    - Disconnect switch must be mounted in the elevator control panel room.
    - Disconnect must be installed according to all applicable local codes.
- **120V Power with Fused Disconnect**
  - Quantity 1: Permanent 120V, single phase, 15 ampere dedicated power to a lockable fused (cartridge type) disconnect switch.
    - Disconnect switch must be mounted in the elevator control panel room.
    - Voltage must be run from the disconnect switch to a junction box in a discrete location within 3' of the top of the elevator hoistway location (If required by the applicable local code.
- **Conduit from Elevator Control Room to Top of Elevator Hoistway**
  - 1 @ 1" trade size for the 240VAC motor wire
  - 1 @ 2" (or 3" for 4+ stops) trade size for all low voltage wires
- **Telephone Works**
  - Telephone jack must be provided next to the electrical disconnects. This can be the common house line in most
    jurisdictions. Please check with your building contractor for code requirements.
- **Floor Built for Load**
  - Smooth level surface for installing the elevator, with floor load bearing capacity for the elevator plus rated load. An exact specification can be provided by contacting your local installer or our factory.
- **Floor and Pit Cutouts Completed**
  - If a pit is to be used, a smooth, level surface of at least 4" must be provided. For pit depths greater than 12", contact your local installer to ensure proper equipment will be provided.
  - It is recommended that any pit floor and walls be finished prior to installation. Pit floor and walls are visible after elevator installation is completed. Dimensions on drawings are to finished surfaces.
  - Hole in floor, or modified balcony rail as directed by drawings.
- **Check Floor to Floor Max and Min Distances**
  - All measurements on site to match the job specific drawings.
  - Minimum overhead to match the job specific drawings.
- **Walls and Painting Must be Completed**
  - Drywall or Plaster sanding, finishing and painting must be completed.
- **Jobsite Clean**
  - Jobsite should be clean. Debris which could damage the elevator should be removed.

INSTALLATION SAFETY TIPS

Follow these safety tips during installation. Please read and understand this entire manual before installing the elevator.

1 Proper, safety-approved protection for your head, eyes, ears, hands, and feet should be worn during all phases of the installation.

2 Use extreme caution while raising the elevator components into position to avoid personal injury or damage to the equipment.

3 Use extreme care when operating units without panels in place to avoid personal injury from moving parts.

4 Power should be removed from the drive unit and operating systems, including the controller, when any electrical work or adjustments are being done.

5 To avoid possible electrical shock, you should not work on a wet floor or enter an elevator or elevator pit when it contains water.

6 Use only specified anchor fasteners.

7 Never work alone and always be aware of fellow workers and their safety.

8 Never wear loose-fitting clothing during installation. Shirt cuffs should be buttoned to avoid being caught in moving machinery.

9 Ensure that all electrical and mechanical equipment is properly enclosed.

10 Never place yourself in a position where you may be harmed (i.e., between shear points, under heavy objects, in the path of moving parts, etc.).

11 Never stand directly under the cab or inside the hoistway during testing or when power is being supplied to the cab itself.

12 Floor openings should be secured and closed off whenever leaving the job site unattended.

DOUBLE-CHECK SITE SPECIFICS

1 Prior to delivery, ensure that you have clear access into the building and a clear route to the installation site.

2 For job site verification, use the following information sources:
- Plan drawings (also referred to as installation drawings or shop drawings)
- Written and verbal direction from the customer, electrical contractors, hoistway contractors, inspector, and architect.

3 Carefully check all site measurements and requirements per the drawings. If they do not match, contact Savaria's *Technical Support* at 1 (800) 791-7999 for immediate assistance. Specifically, check the following items against the drawings:
- Top Floor Height Overhead. Ensure the minimum clearance from the finished floor to ceiling is 96" nominal for the short cab configuration and 106" for the standard cab configuration.
- Bottom Floor Height. Ensure the bottom of pit (or top of finished floor when using ramp configuration) to the finished floor of the next floor is less than 12'. If the height is greater than 12', confirm the unit has been ordered with special rails for the lowest floor.
- Middle Floor Heights (if applicable). Ensure the floor to floor heights for standard middle floors are 12' - 0" maximum. If the height is greater than 12' - 0", confirm the unit has been ordered with special rails for the middle floors.
- Measure the size of the hoistway hole cutout in the finished floor. The hole MUST be round for Round units and octagonal for Octagonal units.
- Measure the location of the hoistway holes cut in the finished floors to ensure they are located directly above each other (+/- 1/8").
- Check the electrical power disconnect switches (proper size, type and amperage). Disconnects must be within view of the controller.
- Verify the correct voltage on the "load" side of the disconnects.
- Review the "Provisions by Others" with the site supervisor. This includes any post-installation tasks required by others for the elevator to pass inspection.
- Check the walls and handrails surrounding the elevator thru-floor and balcony cutouts to ensure the walls are plumb, and there is an adequate clearance around the hoistway location for installation of the elevator. (8" minimum clearance is required around the hoistway cutout for proper installation; 18" is preferred).
- Review the location of electrical wiring and/or conduit to the unit.

4 Ensure there are no fire and safety issues. Contact Savaria's *Technical Support* if there are any fire and safety issues.

5 Verify there is adequate lighting around the lift platform and at the landings.

UNPACK AND VERIFY SHIPMENT

1 Prior to installation, unpack the shipment and verify the contents.

2 Check the contents of the shipment against the job order. Contact Savaria's *Technical Support* department at 1 (800) 791-7999 if any parts are missing or incorrect.

3 Check the condition of the shipment for any damage; installing damaged parts can lead to safety violations and void the limited warranty. Contact Savaria's *Technical Support* department if any parts are damaged.

INSTALLATION PROCEDURES

WARNING

Follow the steps provided to ensure your safety during installation. Failure to follow instructions renders the Limited Warranty null and void. In addition, any party installing the product who deviates from the installation instructions agrees to indemnify, save, and hold harmless the manufacturer from any and all loss, liability, or damage that may occur as a result of the deviation.

HOISTWAY INSTALLATION (FIRST FLOOR) 10
- Install base ring 10
- Install pit ring 12
- Measure, cut and install pit shims (if PIT RING) 14
- Hoistway installation information 15
- Identify rail types 16
- Measure, and cut rails (if BASE RING) 17
- Measure, and cut rails (if PIT RING) 19
- Place cab floor platform in base/pit ring 21
- Stack rings for lifting 24
- Secure rails at base/pit ring 27
- Lift and secure rings to rail 31
- Extra header ring/stabilizer bars (if FTF >14ft) 34
- Align and plumb rails 35

HOISTWAY INSTALLATION (THRU-FLOOR SECTION) 36
- Measure floor to floor height (thru-floor) 36
- cut rails to length (thru-floor) 37
- Stack rings for lifting (thru-floor) 38
- Insert rail splines (thru-floor) 40
- Secure rails at mid-floor ring (thru-floor) 42
- Lift and secure rings to rail (thru-floor) 43

HOISTWAY INSTALLATION (BALCONY SECTION) 45
- Measure floor to floor height (balcony) 45
- Cut rails to length (balcony) 46
- Insert rail splines (balcony) 49
- Insert rail sections (balcony) 51
- Lift and secure rings to rail (balcony) 52

HEAD ASSEMBLY INSTALLATION 54
- Lift and secure head assembly to hoistway rails 55
- Align and plumb rails (read assembly) 67

CAB INSTALLATION 68
Cab Installation information 68
Install 3 of 4 cab rails 69
Install cab ceiling weldment 71
Install 4th car rail 74
DRIVE TRAIN INSTALLATION 75
Install drive train 75
Install cab ceiling plates 86
ELECTRICAL COMPONENTS 87
Install controller assembly 88
Install reset switch 90
Install car top box 91
Install car top prop and CTIS (if applicable) 92
Minimum required wiring for manual operation 94
Controller power wiring 95
Preliminary call station wiring 96
Install limit switches (upper and lower) 97
Install EMIs (interlocks) and hall calls 99
Install COP Leg 102
COP and Wiring 103
Controller Wiring 105
ROPING AND SLACK ROPE SWITCHES 106
Roping car and temporary mode operation - preliminary 106
Car top and slack rope wiring 109
Install hand crank switch 111
LANDING POSITIONS 112
Set landing (floor) positions 112
CAB FINISHING 115
Attach cab handrails 115
Install guide shoes 116

GLAZING....117
Glazing introduction....117
Assemble snap cap....119
Install upper hoistway fixed panels....122
Install mid-floor hoistway panels (thru-floor configuration only)....125
Install lower hoistway fixed panels....127
Install hoistway doors....128
Install cab fixed panels....130
Install bi-fold cab doors and gate switches....132
Bi-fold door and door operator....135
Install motor cover....138
Install snap cap cover....139
Install ramp (if base ring)....140
Install buffer springs....141
INSTALLATION VERIFICATION AND TESTS....142
Verify installation....142
Perform OSG speed and brake test....147
Perform safety test....147
APPENDIX A: ELECTRICAL SCHEMATICS....148
APPENDIX B: P-TOOL INFORMATION....148
APPENDIX C: DIANOSTIC BEEP CODES....154
APPENDIX D; MAINTENANCE....155
APPENDIX E: CLEANING....157
APPENDIX F: SAVARIA LINK OPTION....161
APPENDIX G: RATH 2400 INSTALLATION AND OPERATION....162
APPENDIX H: CAR TOP INSPECTION SATATION....166

HOISTWAY INSTALLATION (FIRST FLOOR)

Step 1
Install base ring

IMPORTANT

Use this procedure to install a BASE RING. If you have a PIT RING, go to STEP 2. The base ring is used when there is no pit and sits directly on the floor.

Proper location of the BASE RING is crucial to the rest of the installation. Alignment of this ring determines the location of the hoistway doors, and if applicable, the orientation of the unit with regards to any balcony attachments.

CAUTION

The cutout on the upper portion of the base ring MUST be aligned **parallel** to any balcony edge on the floors above.

1 Position and align the base ring as shown in the illustration below.Using a laser plumb, align the center of the notched opening (as determined by a small hole on the outside face of outside of the vertical rolled ring) with adequate clearance (approx.with adequate clearance (approx. 1/2") from the edge of the hoistway openings on all above thru-floors and 3" minimum (3.5" maximum) from the edge of balconies.

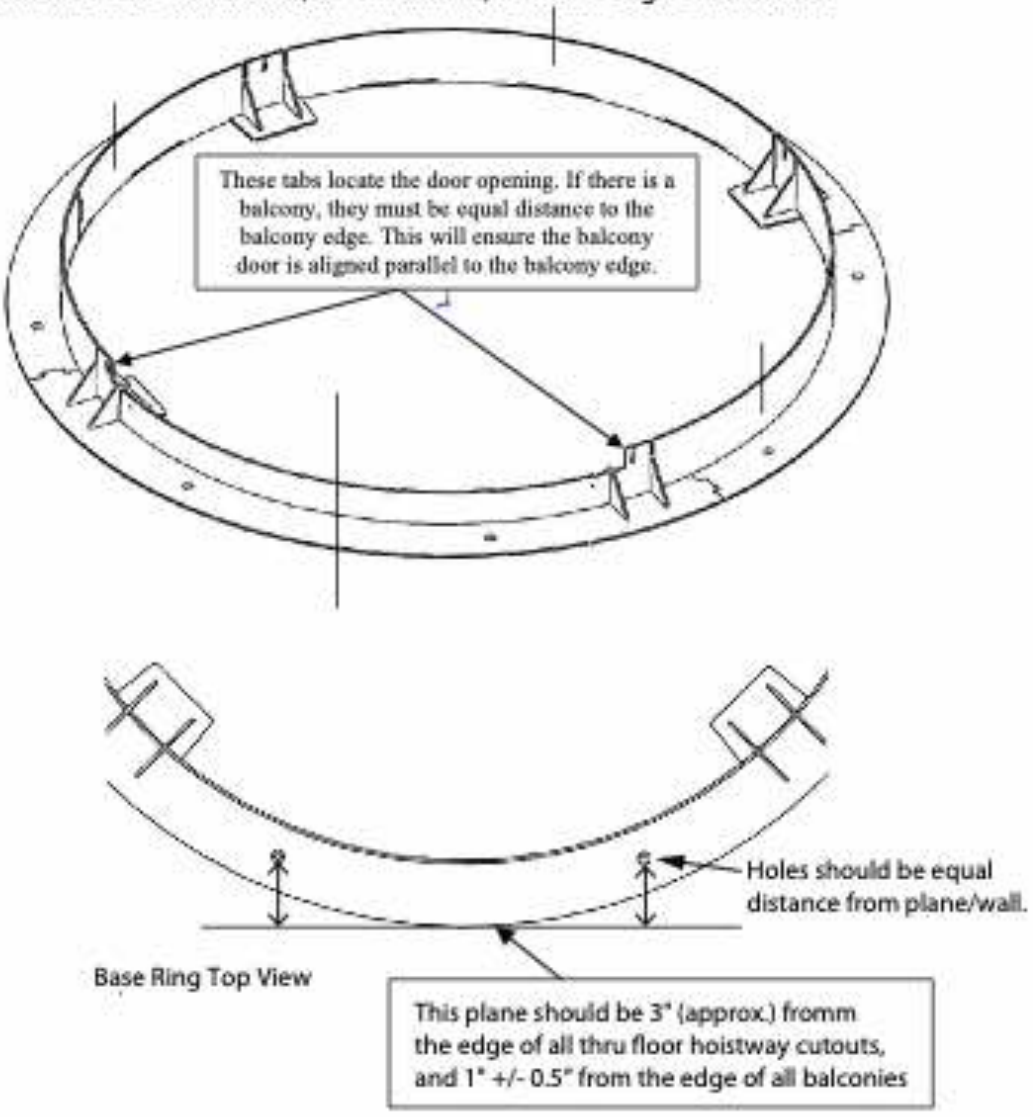

Figure 1: Base ring with cutout for ramp

2 After aligning the base ring, use a level to level the ring in both directions (front to back and side to side).
- If the floor is not level, shim the base ring using thin steel shims. Tolerances for level are +/- 1/8" in both directions.



Figure 2: Level base ring

3 Secure the base ring to the floor using the fasteners supplied.
- Pre-drill pilot holes for both types of fasteners.
- A minimum of 4 fasteners must be installed through the base ring to the floor. It is strongly recommended, however, to install a fastener at every pre-drilled clearance hole.

Fasteners (from kit PK-0001):
- Qty: 8 5/16" x 2.25" Tapcon (to secure base ring to concrete floors)
- Qty: 8 M10 x 2.5" flat head wood screws (to secure base ring to wood floors)
- Qty: 8 Fastener covers and washers

IMPORTANT

Note that the anchors provided by Savaria are standard/typical anchors and are not suitable for all site conditions. Always make sure the anchors used are proper for the type of surface on site.



Figure 3: Secure base ring using fasteners

NOTICE

We recommend installing the ramp (for base ring only) at the end of the installation process so it doesn't get dirty or damaged during the installation.

Step 2
Install pit ring

IMPORTANT

Use this procedure to install a PIT RING. If you have a BASE RING, go to STEP 1. The pit ring is used when there is a pit and sits on the lip of the pit.
Proper location of the PIT RING is crucial to the rest of the installation. Alignment of this ring determines the location of the hoistway doors, and if applicable, the orientation of the unit with regards to any balcony attachments.

1 Position and align the pit ring as shown in the illustration below. Using a laser plumb or plumb bob, align the outside of the vertical ring with adequate clearance (approx.with adequate clearance (approx. 1/2") from the edge of the hoistway openings on all above thru-floors. If the unit is configured for a balcony attachment, ensure that the balcony edge is 3" minimum (3.5" maximum) from the edge of balconies.

NOTICE

For thru-floor only, check all 4 sides to confirm tat there is clearance on all sides. PLace landing rings in the landings and align to the pit.

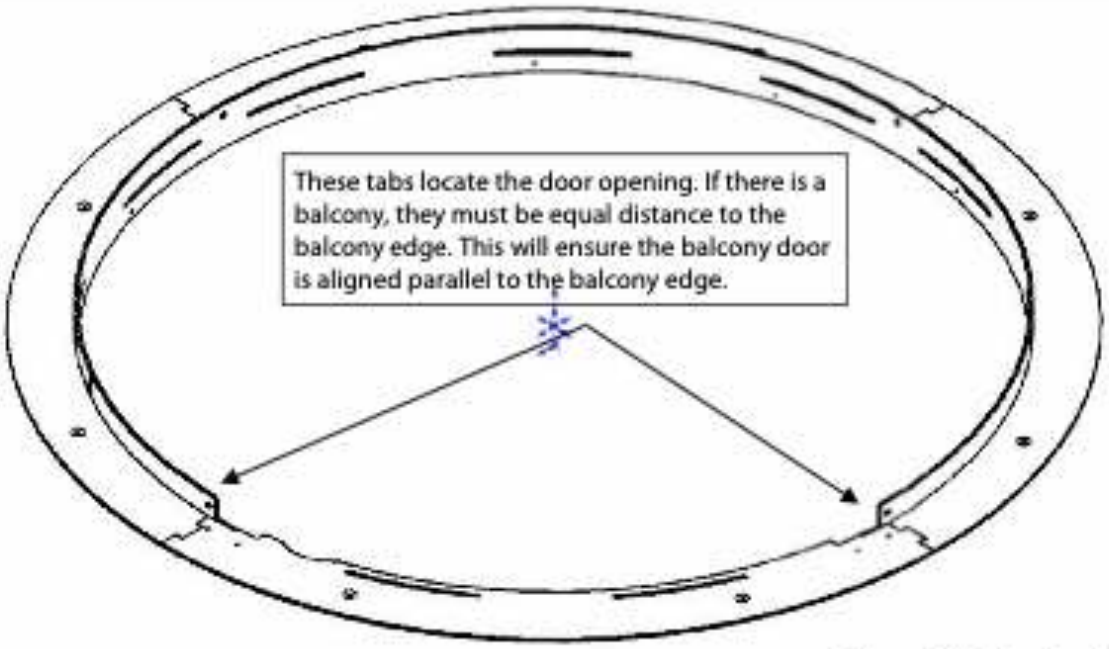

Figure 4: Pit Ring - Position and align

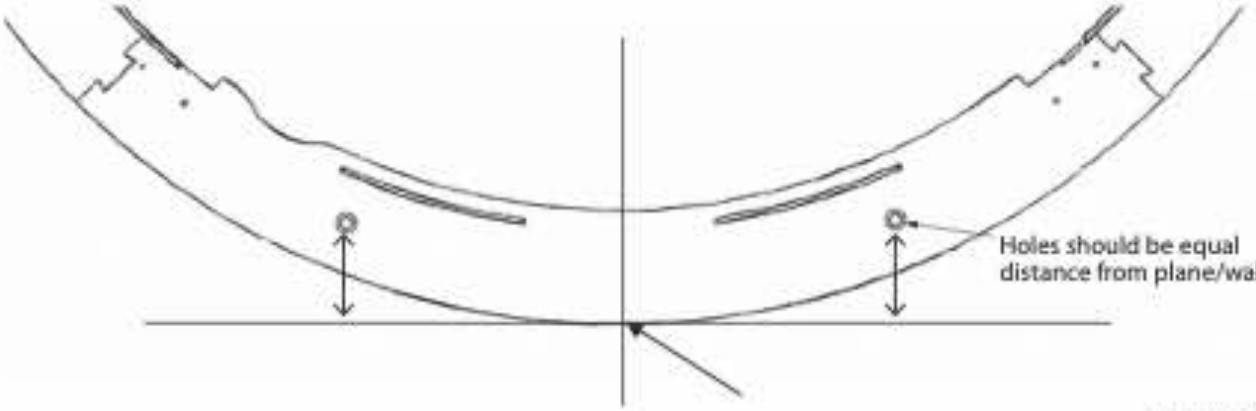

Figure 5: Pit Ring

2 If the unit is configured to attach to a balcony on any floor, using a laser plumb or plumb bob, ensure the center plumb or plumb bob, ensure the center of the door opening as shown here is 1" minimum (1.5" maximum) from the minimum (1.5" maximum) from the edge of the balcony.

3 After aligning the pit ring, use a level to level the ring in both directions (front to back and side to side).
- If the floor is not level, shim the pit ring using thin steel shims. Tolerances for level are +/- 1/8" in both directions.

4 Secure the pit ring to the floor using the fasteners supplied.

Fasteners (from kit PK-0002)	Qty
5/16" x 2.25" Tapcon	8
Fastener covers and washers (to secure pit ring to concrete floors)	8

- Pre-drill pilot holes for the fasteners with a 1/4" concrete bit.
- A minimum of 4 fasteners must be installed through the pit ring to the floor. It is strongly recommended, however, to install a fastener at every pre-drilled hole.
- T40 bit provided
- If shims are used, always place them beside the holes that the fasteners go in.

> **IMPORTANT**
>
> the anchors provided by Savaria are standard/typical anchors and are not suitable for all site conditions. Always make sure the anchors used are proper for the type of surface on site.



Figure 6: Secure pit ring using fasteners

5 Place the pit base plates on the floor of the pit, centered under the holes in the vertical portion of the pit ring and directly against the wall of the pit. Ensure the holes are towards the center of the pit as shown below.

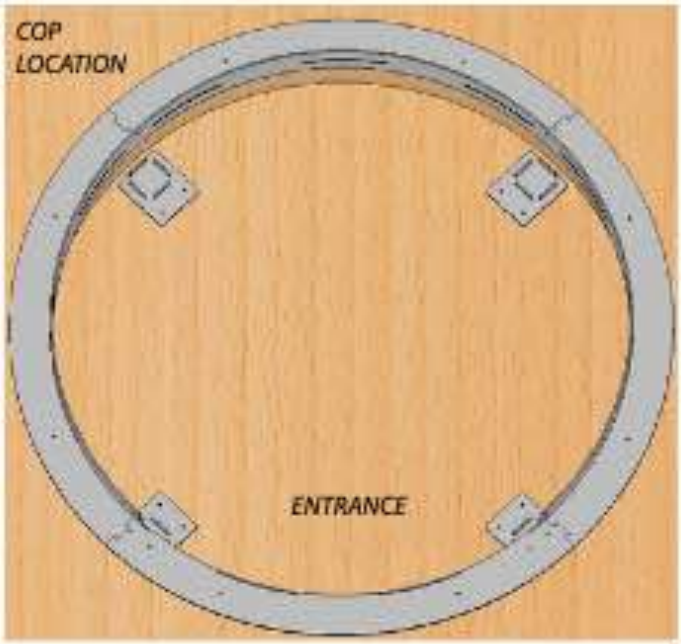

Figure 7: Pit ring with base plates

Step 3
Measure, cut and install pit shims (if PIT RING)

> **IMPORTANT**
> This procedure applies for a PIT RING only. If you have a BASE RING, please disregard this step.

1 Ensure the pit ring is positioned properly per the plan drawings and is leveled in all directions.

2 You need to cut a short **pit rail section** to shim the hoistway rails to their proper mounting location on the pit ring. You can do this by temporarily installing the rails and measuring from the bottom of the rail to the top of the pit base supports for all four rails, then cutting each shim to that measurement. Alternatively, you can measure the pit depth at each of the four corners, subtract the thickness of the pit base support (3/16 inch), and subtract 2-5/8 inches.

- For example, if your pit depth in one corner was 5 inches, you would cut your shim to 2-3/16 inches using the following equation: 5 minus 3/16 minus 2-5/8 = 2-3/16 or simply 5 minus 2-13/16 = 2-3/16.
- **NOTE**: Your shim heights may vary due to unevenness in the pit floor. If measurements are taken at each rail, you will ensure the rails are level.

Step 4
Hoistway installation information

Installation of the rails for each floor follows the same process. Depending on the floor type (thru-floor, or balcony), the components added will change, however the methodology is the same.

These are the basic steps in the process which are described in further detail on the following pages.

1 Measure the gusset to floor height or floor to floor height (depending on the application).
2 Cut the rails to length.
3 Stack the rings for lifting.
4 Secure the rails at the ring.
5 Lift and secure the rings.

IMPORTANT

The Vuelift is offered in multiple configurations depending on how the unit attaches to the level above. The floor sections are either THRU-FLOOR or BALCONY. Be sure to **note which floor type applies** and follow the instructions for that particular section on the following pages.

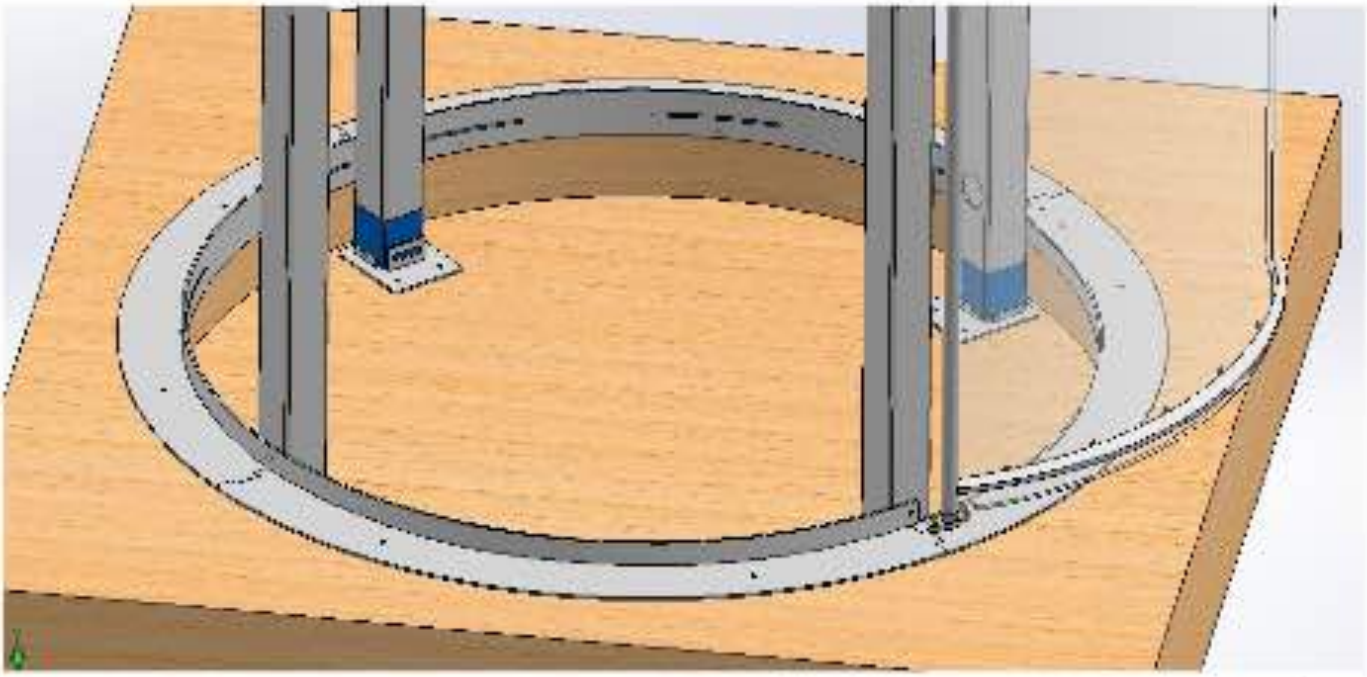

Figure 8

Step 5
Identify rail types

Each floor consists of different types of rails as shown below - **standard rails**, **pit rails**, and **EMI pit rails**.

The rails are packed such that the rails for the lowest landing will be on top. Confirm this by checking for the holes in the bottom of the rail (for pit switch and pit light) and the holes 56 inches from the bottom of the rail (for pit pins).

NOTICE

Note that the lowest landing rails differ from the rails for all other landings in that there are holes for a pit light, pit switch, etc. in the lowest landing rails.

Note that the EMI pit rail has a rectangular cutout on one of the faces. This is where the interlock will be installed later in the installation process. For the first floor, the EMI pit rail is provided with additional large holes on the face opposite the rectangular cutout for the EMI pit rail These holes are for the pit light and pit switch. Ensure that the appropriate EMI pit rail is used for the first floor.

When cutting the rails to length, ALWAYS cut the TOP of the rail. The bottom of the rail is indicated by the three holes close together.

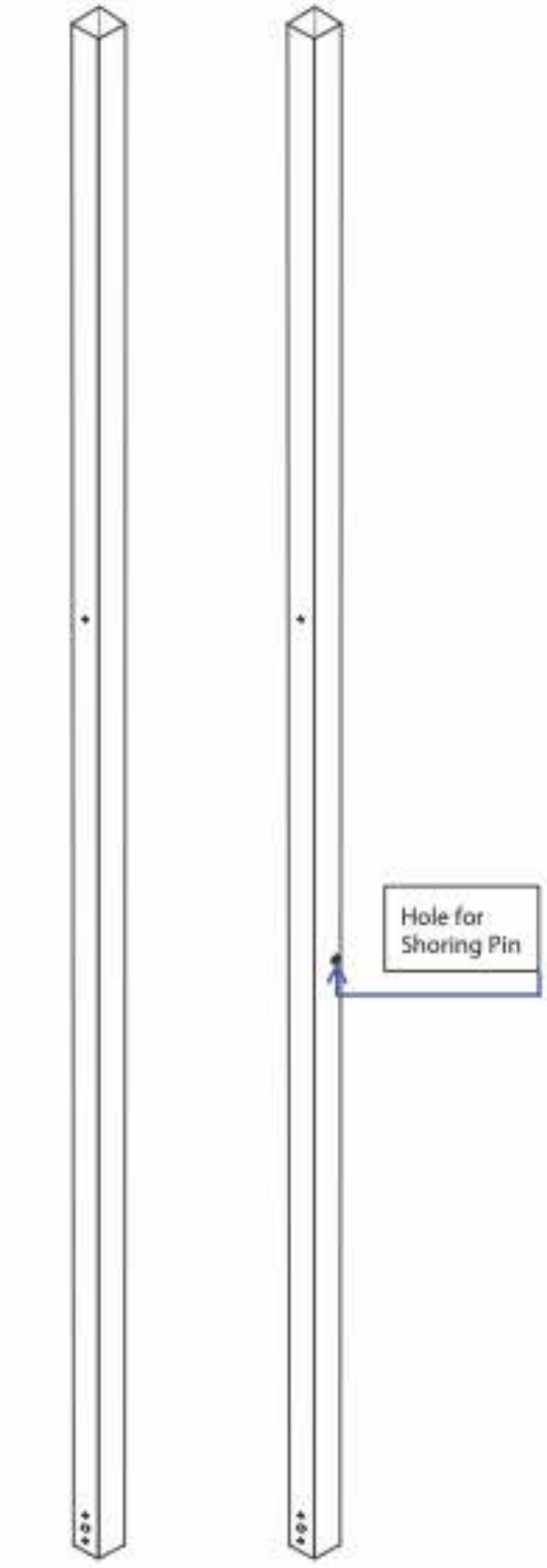

Figure 9: Rail types

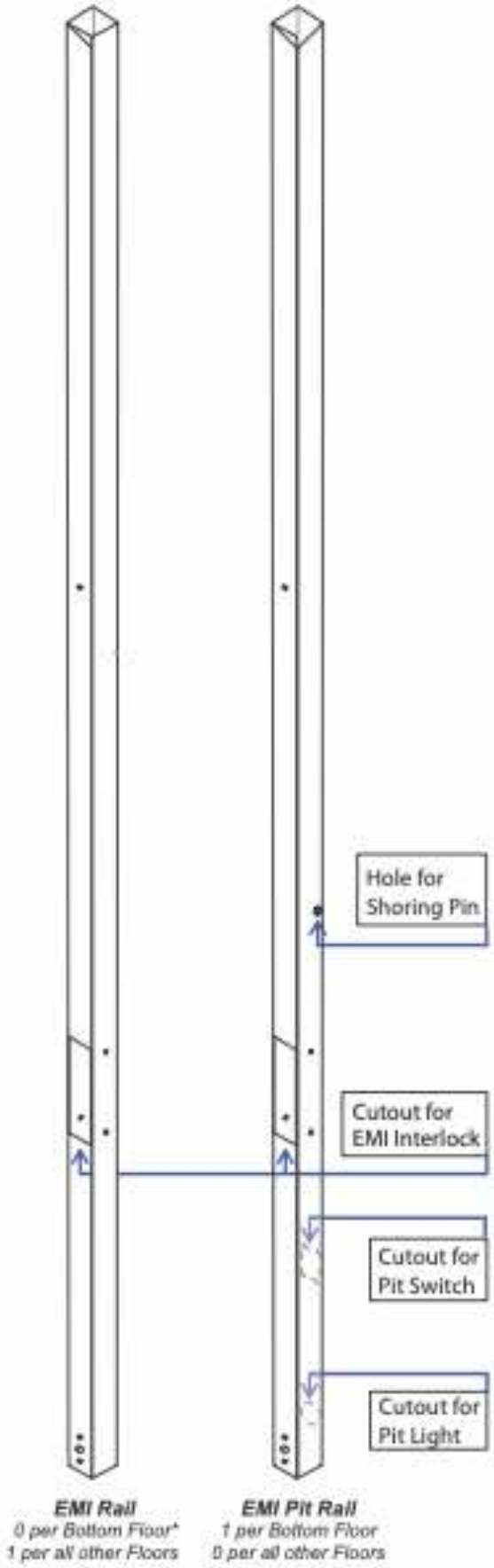

Figure 10:

Step 6
Measure and cut rails (if BASE RING)

> **IMPORTANT**
>
> Use this procedure for a BASE RING. If you have a PIT RING, refer to the next step. The base ring is used when there is no pit and sits directly on the floor.
>
> Precise measurement and cutting is imperative for proper construction of the hoistway and will help to ensure proper travel of the cab. Refer to **CUTTING NOTES**

For the **FIRST FLOOR**:

1. Ensure the base ring is positioned properly per the plan drawings and is leveled in all directions.
2. Temporarily attach all four bottom rails to the base ring. Attach rails to the base ring using a 3/8"-16 x 1" hex bolt (provided in PK-0002 Pit Hardware Package). Make sure the rails are plumb in all directions.
3. Use a 3-point laser level at the 2nd floor to mark all four rails flush with the 2nd floor for cutting.
4. Cut each rail 2 5/8" below the mark.
   - **NOTE**: Ensure all rails are cut to a maximum tolerance of 1/32" of each other.
   - **NOTE**: Directly after cutting the rails, be sure to deburr and remove any sharp edges.
5. After cutting the rails to the proper length, set them aside and go to the next step to stack the rings.

CUTTING NOTES

When cutting rails:

1. Mark the location of the cut on the rail (using a permanent marker or pencil) by **measuring from the bottom of the rail towards the top**.
   - **IMPORTANT**: You MUST measure from bottom to top so you DO NOT cut off the three holes at the bottom end of the rail.
2. Generate a line through the mark with a square.
3. Cut along the line using a low RPM metal saw with a carbide blade.
   - **NOTE:** A low RPM metal saw is by far the best tool for achieving a good cut.
   - **NOTE:** Using other methods of cutting may impact the squareness of the cut. **It is imperative that the cuts be square so the rail contact surface area is sufficient**.
   - **NOTE**: Directly after cutting the rails, be sure to deburr and remove any sharp edges.

NOTICE

It may be necessary to measure and mark the cut line on each face of the rail to ensure the cuts remain square.
Each rail must be cut to **exactly** the same length (± 1/32").

CAUTION

If you cut the rails too short, **stop the job** and contact Savaria for assistance.
DO NOT attempt to change hole locations as this will create further installation problems.

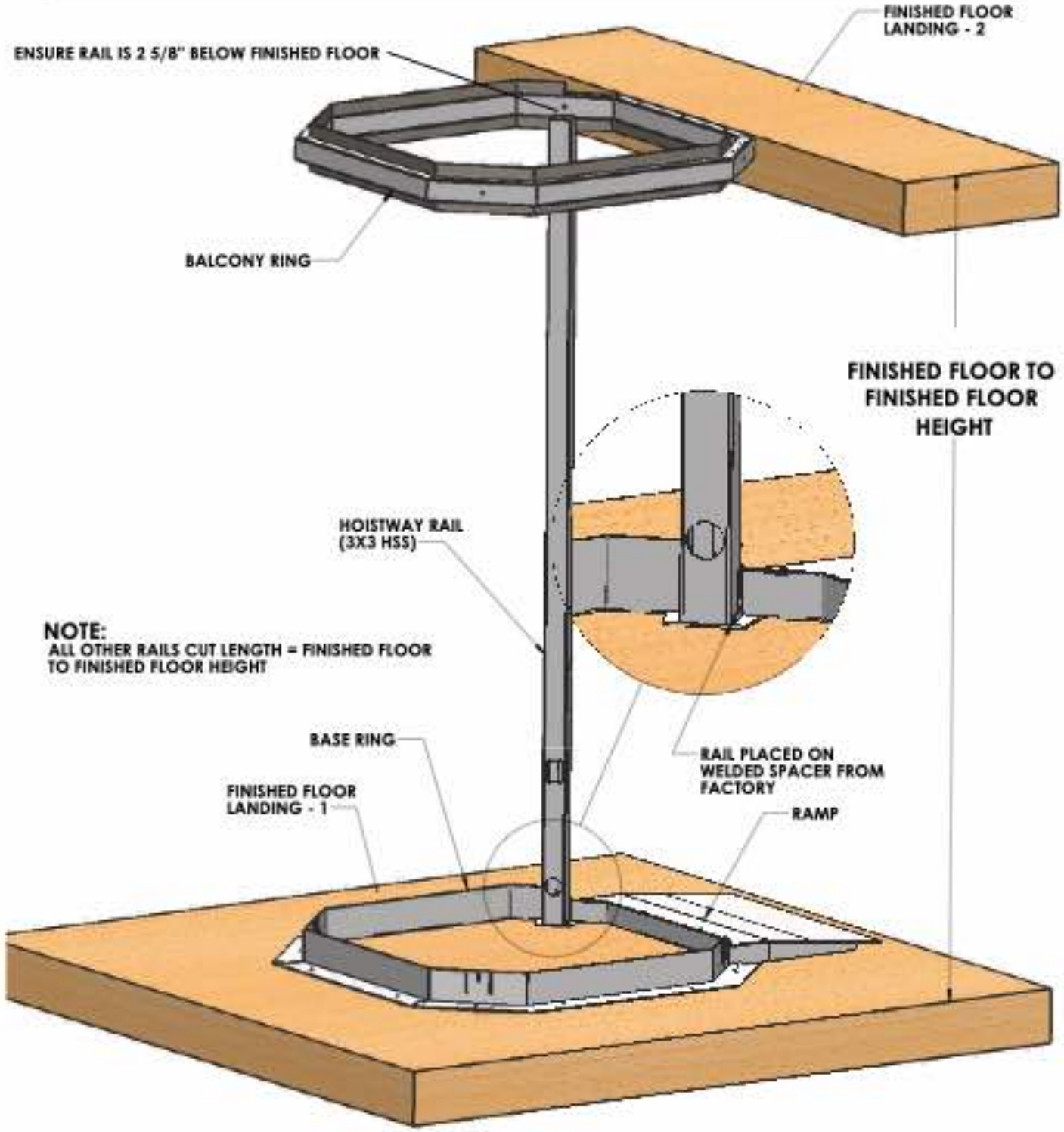

Figure 11: Base ring rail attachment details

Step 7
Measure and cut rails (if PIT RING)

IMPORTANT

Use this procedure for a PIT RING. If you have a BASE RING, refer to the previous step.
The pit ring is used when there is a pit and sits on the lip of the pit.

Precise measurement and cutting is imperative for proper construction of the hoistway and will help to ensure proper travel of the cab.

*Refer to the **CUTTING NOTES** below for important marking and cutting details.*

1 Measure the finished floor to finished floor height and cut the rail to this dimension, ensuring that the rail is measured from the bottom of the rail as you will cut off the TOP of the rail. Alternatively, temporarily attach the rail to the pit rail shim section and to the pit ring with a 1/4"-20 x 1" flat socket cap screw (provided in PK-0128 Pit Hardware Package) through the upper-most hole in the bottom of the rail, then use a 3-point laser level at the 2nd floor level to mark all four rails and cut each rail 2-5/8 inches below that mark.
   - **NOTE**: Be sure to use the bottom rails which are longer in length than the upper rails and have the shoring holes.
   - **NOTE**: Ensure all rails are cut to a maximum tolerance of 1/32" of each other.
   - **NOTE**: Directly after cutting the rails, be sure to deburr and remove any sharp edges.
2 After cutting the rails to the proper length, set them aside and go to the next step.

NOTICE

The final rail cut length will be **finished floor to finished floor height** for all floors when a pit ring is used. See the drawing on the next page.

CUTTING NOTES

When cutting rails:

1 Mark the location of the cut on the rail (using a permanent marker or pencil) by **measuring from the bottom of the rail towards the top**.
   - You MUST measure from bottom to top so you DO NOT cut off the three holes at the bottom end of the rail.
2 Generate a line through the mark with a square.
3 Cut along the line with an angle grinder using a metal cutoff wheel. or using a low RPM metal saw with a carbide blade.
   - **NOTE:** A low RPM metal saw is by far the best tool for achieving a good cut.
   - **NOTE:** Using other methods of cutting may impact the squareness of the cut. **It is imperative that the cuts be square so the rail contact surface area is sufficient**.
   - **NOTE**: Directly after cutting the rails, be sure to deburr and remove any sharp edges.

NOTICE

It may be necessary to measure and mark the cut line on each face of the rail to ensure the cuts remain square.
Each rail must be cut to **exactly** the same length (± 1/32").

CAUTION

If you cut the rails too short, **stop the job** and contact Savaria for assistance.
DO NOT attempt to change hole locations as this will create further installation problems.

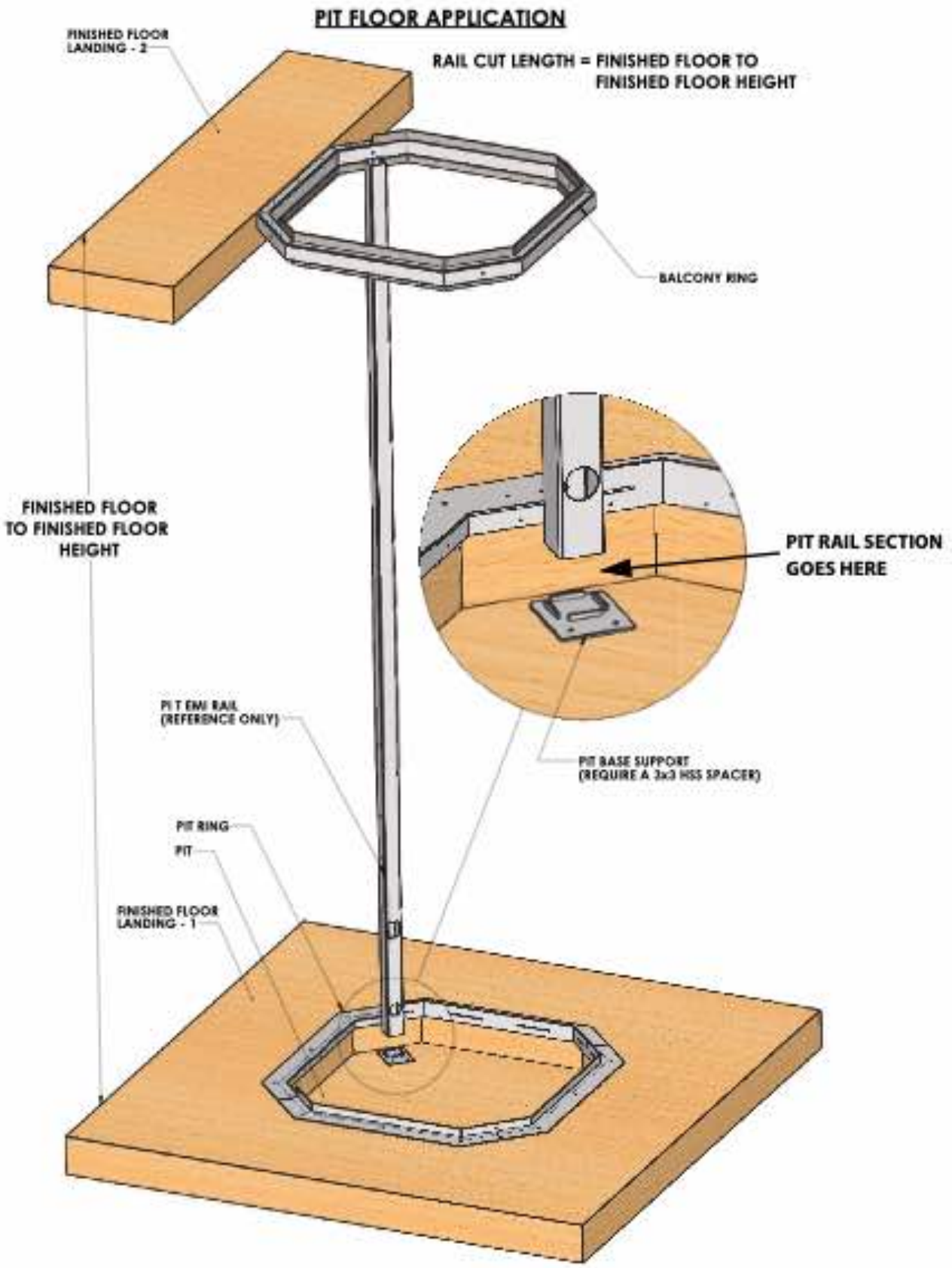

Figure 12: Pit ring rail attachment details

Step 8
Place cab floor platform in base/pit ring

1 Place the cab floor platform inside the base/pit ring **BEFORE proceeding**. Rest the platform on 2X4s that are longer than the pit ring (as shown in the photo below).
2 The temporary template flooring is held in place by gravity. Use a screwdriver to lift up and remove the temporary template flooring to expose the lifting hole.
3 We recommend that you keep the plastic wrap on the cab floor platform so it doesn't get marked up during installation.

IMPORTANT

You **MUST** place the platform inside the base/pit ring **BEFORE** building the hoistway; otherwise, the only way to install the platform afterwards is to disassemble the hoistway.

NOTICE

The COP cutout is larger than the other cutouts. Also, the COP cutout is adjacent to the cab lifting point.

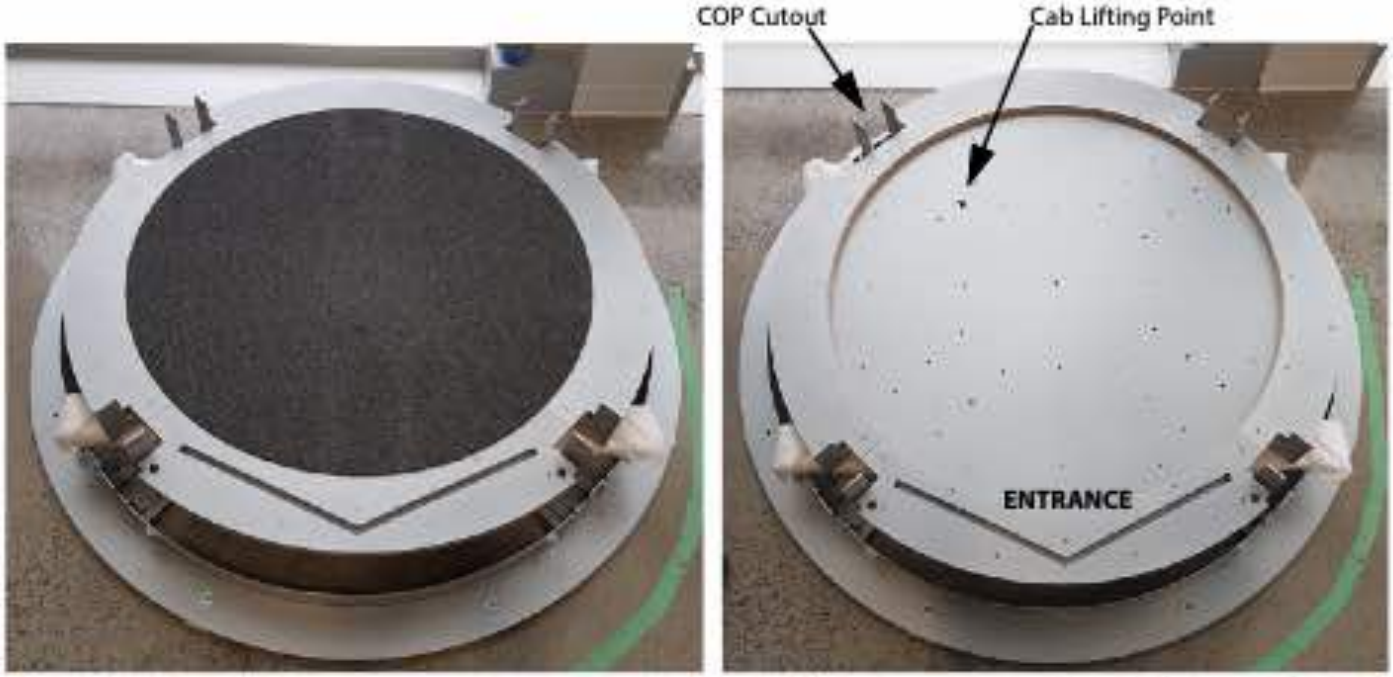

Figure 13: Place platform inside base ring

4 Orient the cab floor as shown below. **Orientation is important for successful construction of the unit.** Note that only the cab floor weldment is shown in the illustration below for clarity of orientation. The cab floor actually comes pre-attached to the weldment as shown in the photos on the previous page.

NOTICE

The location of the lifting bracket and COP leg cutout.
For Type 1 cabs, the COP leg cutout should be oriented across from and to the left side of the notched opening on the base or pit ring
For Type 2 cabs, the orientation should be across from and to the left of the top floor landing door location.
For Type 3 cabs, the orientation, see next page.

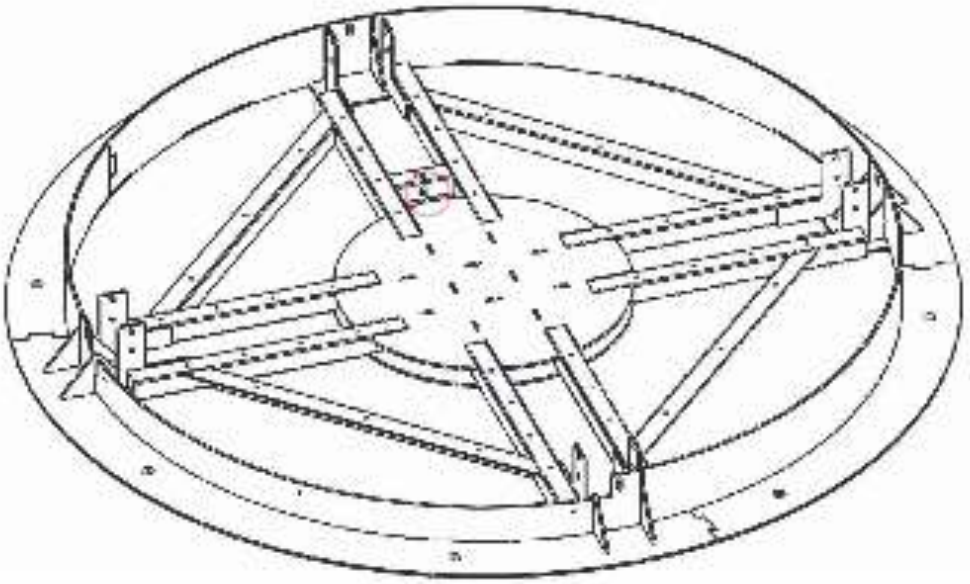

Figure 14: Cab floor weldment in ring

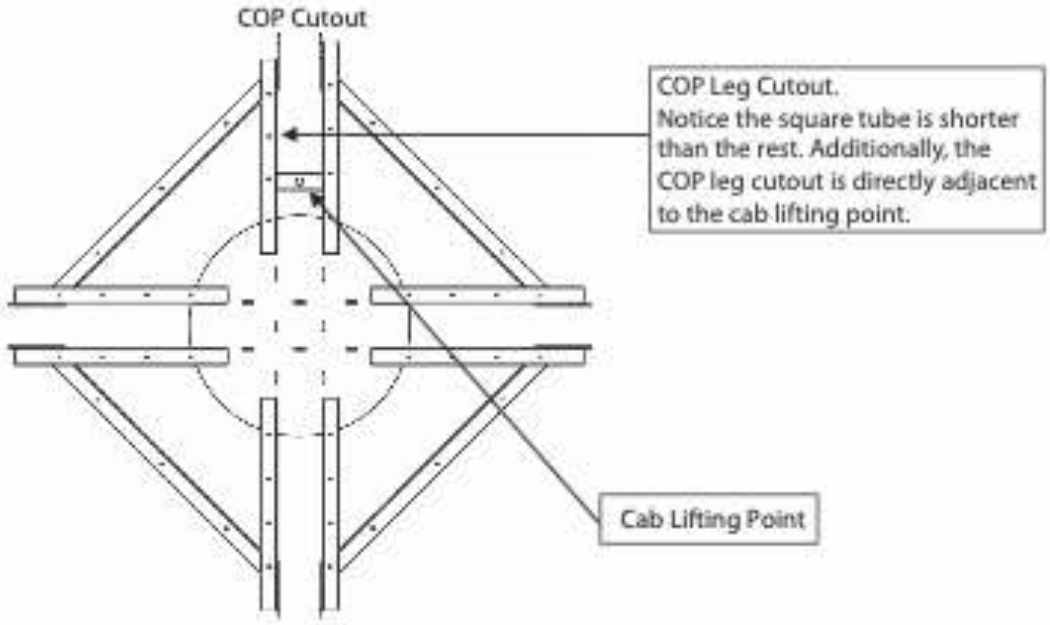

Figure 15: Cab Floor Weldment - top view

NOTICE

Door handing does not impact lifting point location; ONLY door location impacts lifting point location. Motor access for manual lowering is at the rail that is opposite the cab lifting point. This ensures access will be maintained when complete.

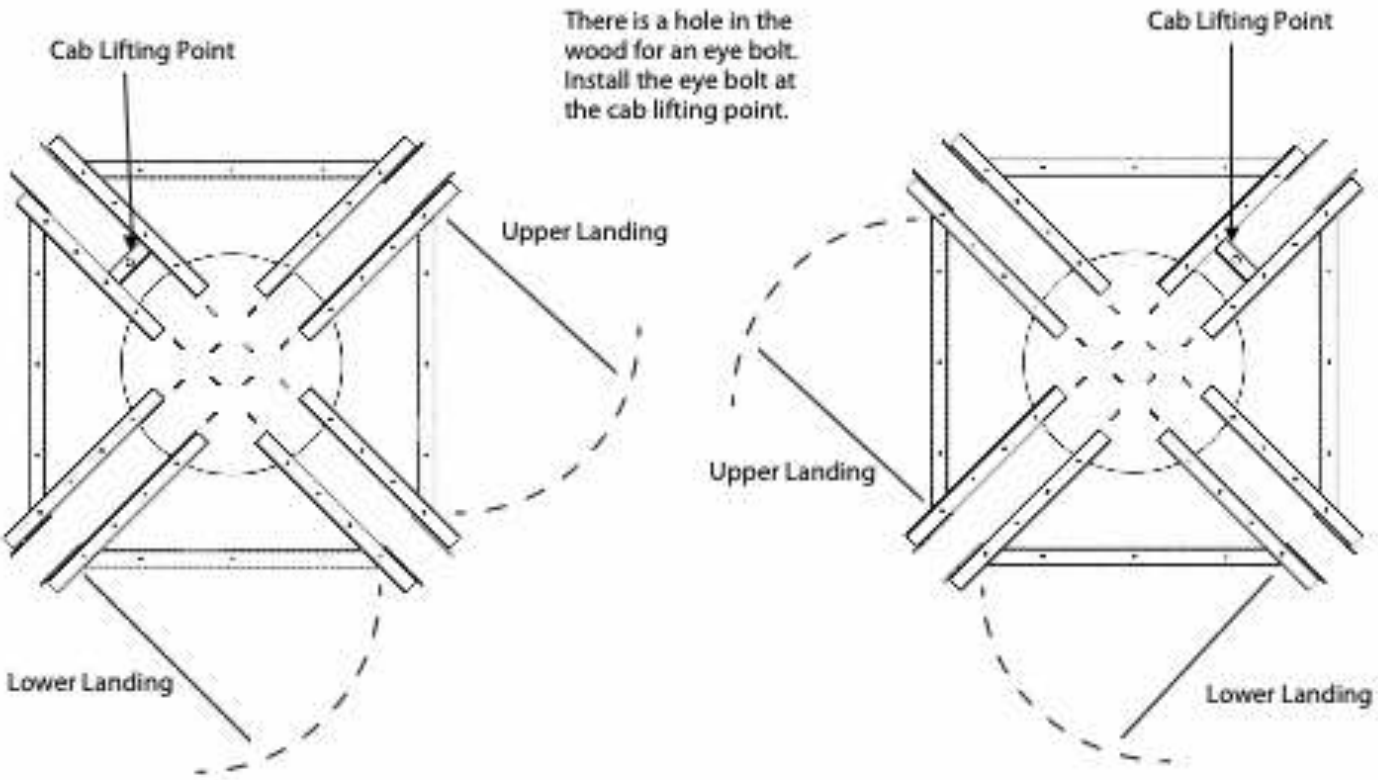

Figure 16: Type 3 cab - Orientation of lifting bracket and COP leg

5 Note that the eye bolt comes attached to the underside of the cab floor for shipping.

6 Remove it from the underside of the floor and attach it to the top of the cab floor at the lifting point as shown below.



Figure 17: Attach eye bolt to cab floor lifting point

Step 9
Stack rings for lifting

Stack the rings in order of use on top of the base/pit ring (or finished floor for all other levels).

The general order of use is as follows:

For a THRU-FLOOR:

- Mid-floor ring - on bottom
- Header ring - in middle (note that an extra header ring may be needed for floor-to-floor height > 14 ft)
- Ceiling ring - on top

For a BALCONY:

- Header ring - on bottom
- Balcony ring - in middle
- Header ring - on top (note that an extra header ring may be needed for floor-to-floor height > 14 ft)

The ring types are shown in the illustration below. Note that the base/pit ring is NOT shown as it has already been installed.

> **CAUTION**
>
> Balcony Ring: Cutout on ring must be oriented UP
> Header Ring: Holes for door hinge must be pointed DOWN and be on both sides of the door opening
> Ceiling Ring: Vertical flange on ring must be oriented DOWN
> Mid-floor Ring: Cutout on ring must be oriented UP

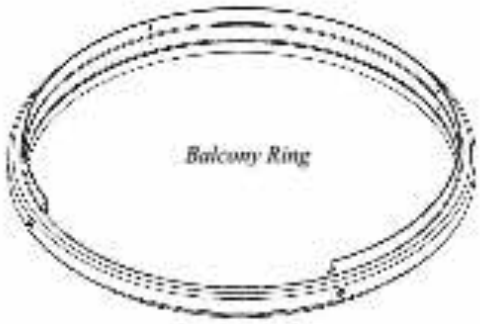

CAUTION
Cutout on Balcony Ring must be oriented UP

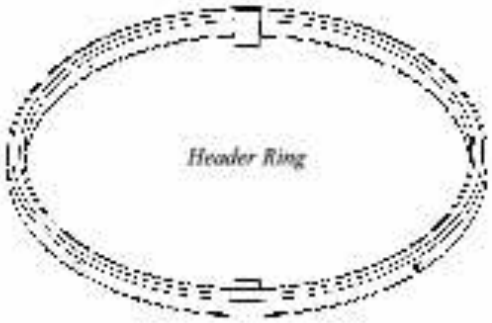

CAUTION
Holes for door hinge on Header Ring must be pointed DOWN and be on both sides of door opening



CAUTION
Vertical flange on Ceiling Ring must be oriented DOWN



CAUTION
Cutout on Pit/Mid-floor Ring must be oriented UP

Figure 18: Ring types

When stacking the rings, add 2x4 pieces of wood as spacers between the rings in a few places as shown below. This will help stabilize the rings and assist in securing the rails to the rings.



Figure 19: Stacking rings

The top half of the following illustration shows the proper alignment and orientation of the rings on the base ring for THRU-FLOOR configurations.

The bottom half of the following illustration shows the proper alignment and orientation of the rings on the base ring for BALCONY configurations.

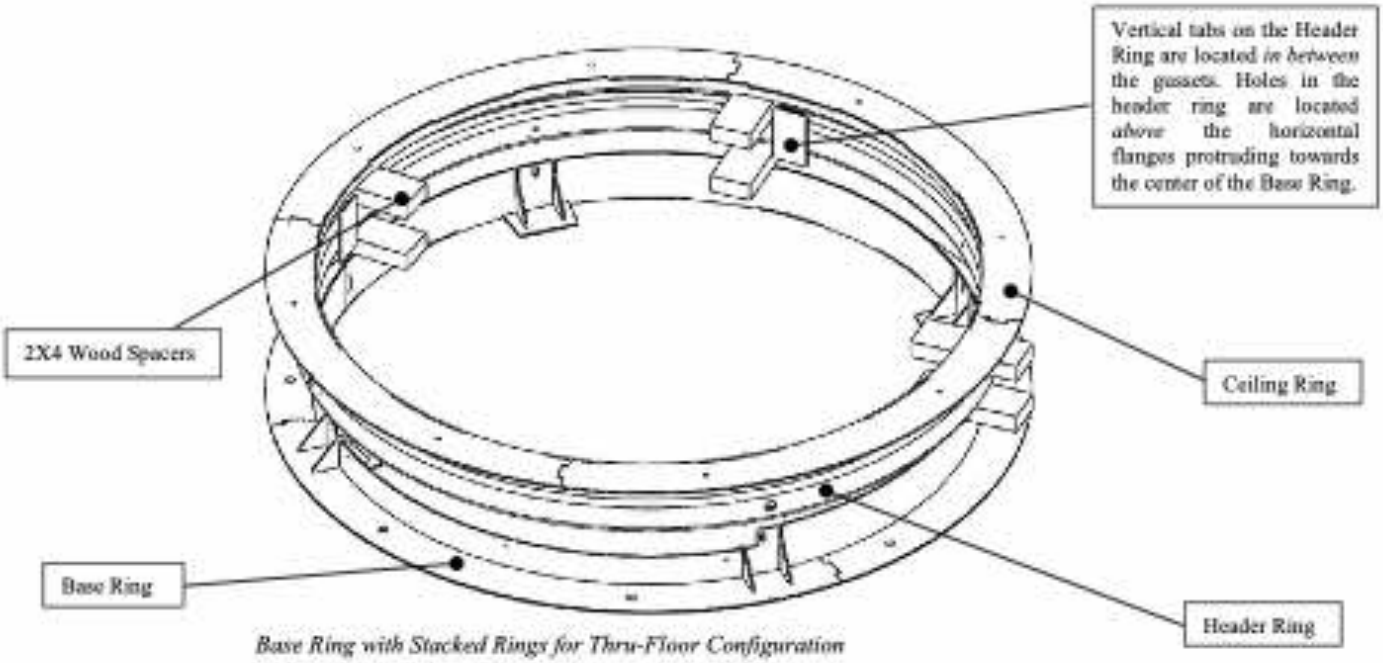

Base Ring with Stacked Rings for Thru-Floor Configuration

NOTE: The cab floor is not shown in these drawings for clarification. The cab floor MUST be in place prior to hoistway rail installation.

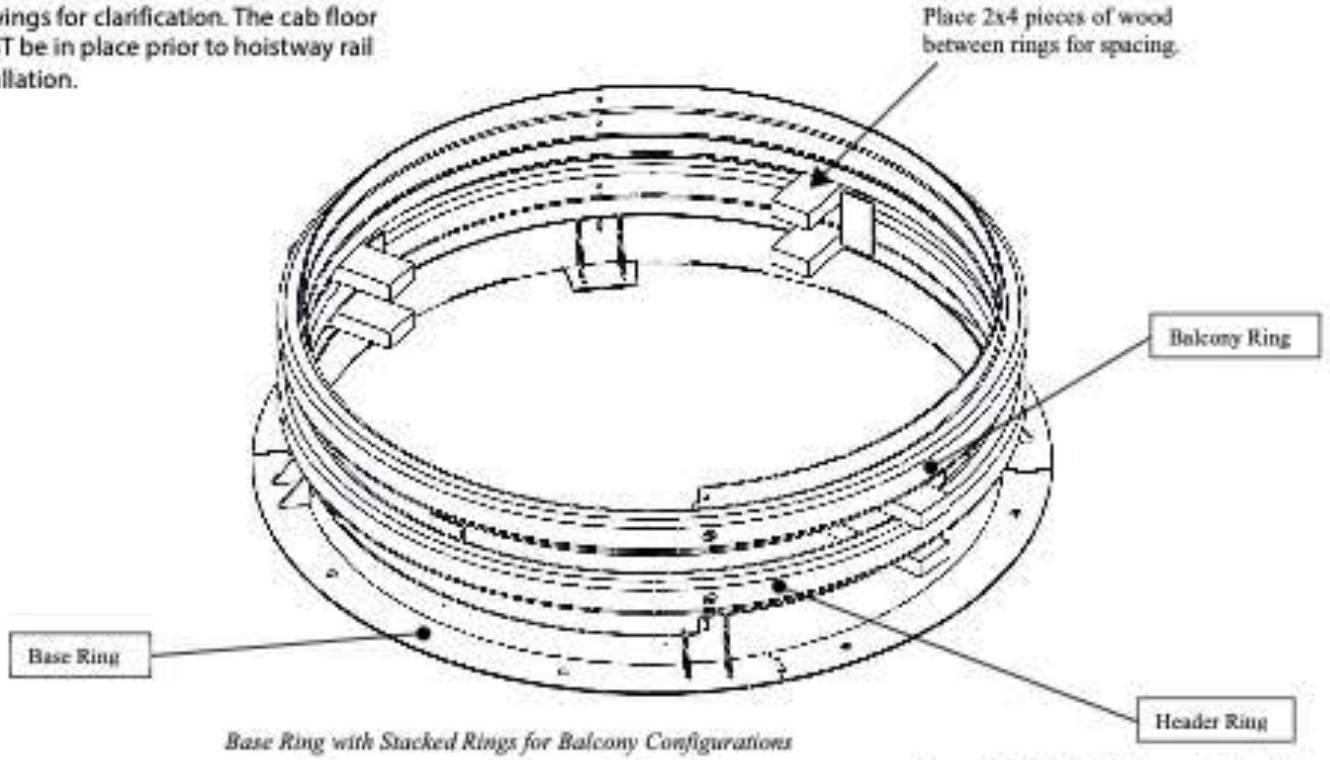

Base Ring with Stacked Rings for Balcony Configurations

Figure 20: Stacked ring configurations

Step 10
Secure rails at base/pit ring

To attach the rails to the base/pit ring, the following tools and fasteners are required:

Item	Qty
3/8" flat washers (in kit PK-0001 for base ring)	4
3/8"-16 x 1" hex bolt (in kit PK-0001 for base ring)	4
9/16" socket	
Socket wrench	
6" socket extension	

NOTICE
We recommend installing the EMI (interlock) rail first.

1 You need to attach a **spline** to the bottom of the rails. To do this, take one hoistway rail from the hoistway rail crate and attach a 6" spline (from kit PK-0134) to the bottom of the rail (note there are 3 holes at the bottom of the rail).
   - **NOTE**: Be sure to use the bottom rails which are longer in length than the upper rails.
   a. Insert the spline into the rail until the center hole in the spline aligns with the countersunk hole in the rail.
   b. Insert the screw into the countersunk hole in the rail as shown below. The rail splines are held in place with a well nut which is a rubber piece with a steel nut inside. As the well nut tightens, it "mushrooms" against the metal on the inside of the spline. **This means the nut will NEVER get completely tight.**
   c. Loosely tighten the screw and slid the shim over the spline. if the spline protrudes past the shim, make a mark to indicate the length of the shim. Remove the shim and then measure 1/4" up from that mark. Use a square to draw a line across the spline at that measurement. Cut the spline to that measurement and reinstall to the rail. Tighten until the rail spline is held firmly in place and does not wiggle.
   d. The head of the screw should sit flush with the face of the rail.
   e. Repeat this section for the 3 remaining rails and splines.
2 Put the **rail shim section** in place at the bottom of the hoistway rail (as identified below).

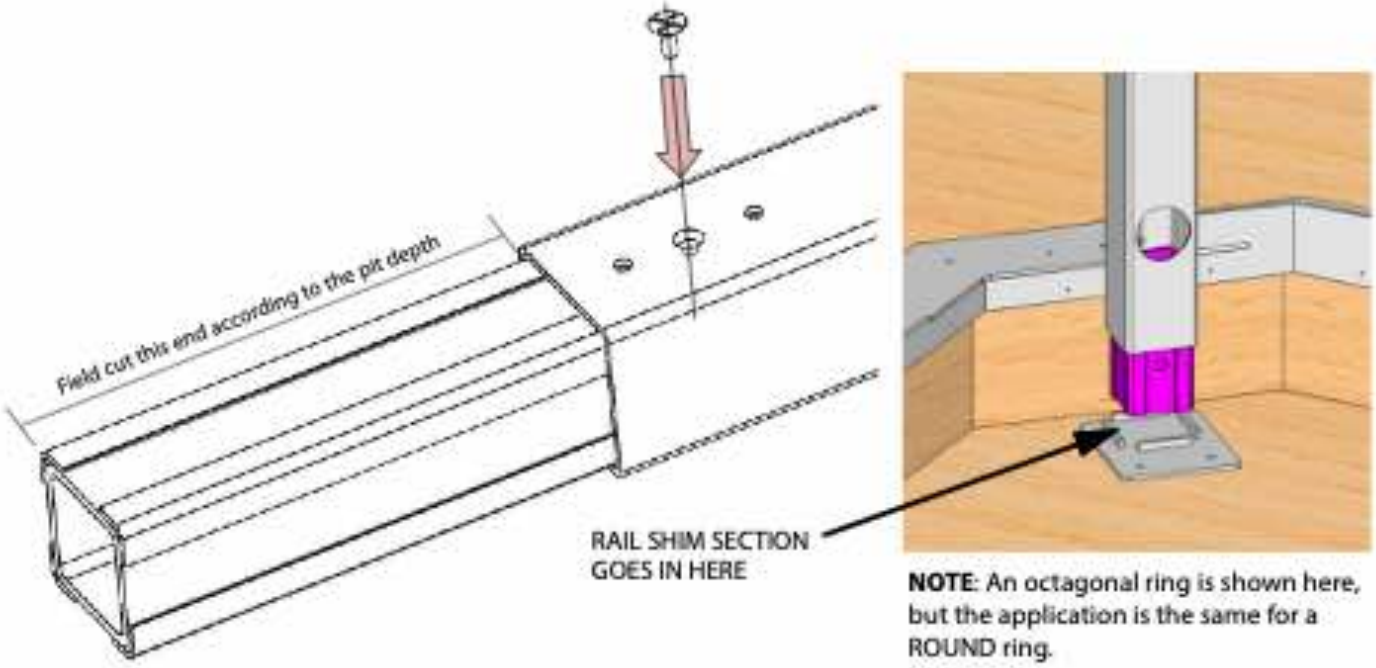

NOTE: An octagonal ring is shown here, but the application is the same for a ROUND ring.

Figure 21: Insert spline in rail

3 To secure the rails to the ring, orient the rail with the holes facing **away** from the center of the ring.

4 For the **Base Ring**, set the rail on the base ring and place it in between one set of gussets. For the **Pit Ring**, with the pit rail shim section in place at the bottom of the rail, set the rail on the pit base plate at the bottom of the pit.

5 You may need to use a rubber mallet to align the face of the rail against the vertical face of the base/pit ring.

6 In determining the rail location, you must orient the **EMI (interlock) rail** in the proper position. With the EMI rail positioned to the **LEFT** of the notch as facing the base ring, this orientation assumes a **left hand swing** door (hinges on the right as you face the hoistway) for the base floor. For a **right hand swing** door, orient the EMI rail to the gusset to the **RIGHT** of the notch in the base ring.

NOTICE

The cab floor is not shown in this drawing for clarification. The cab floor MUST be in place prior to hoistway rail installation.

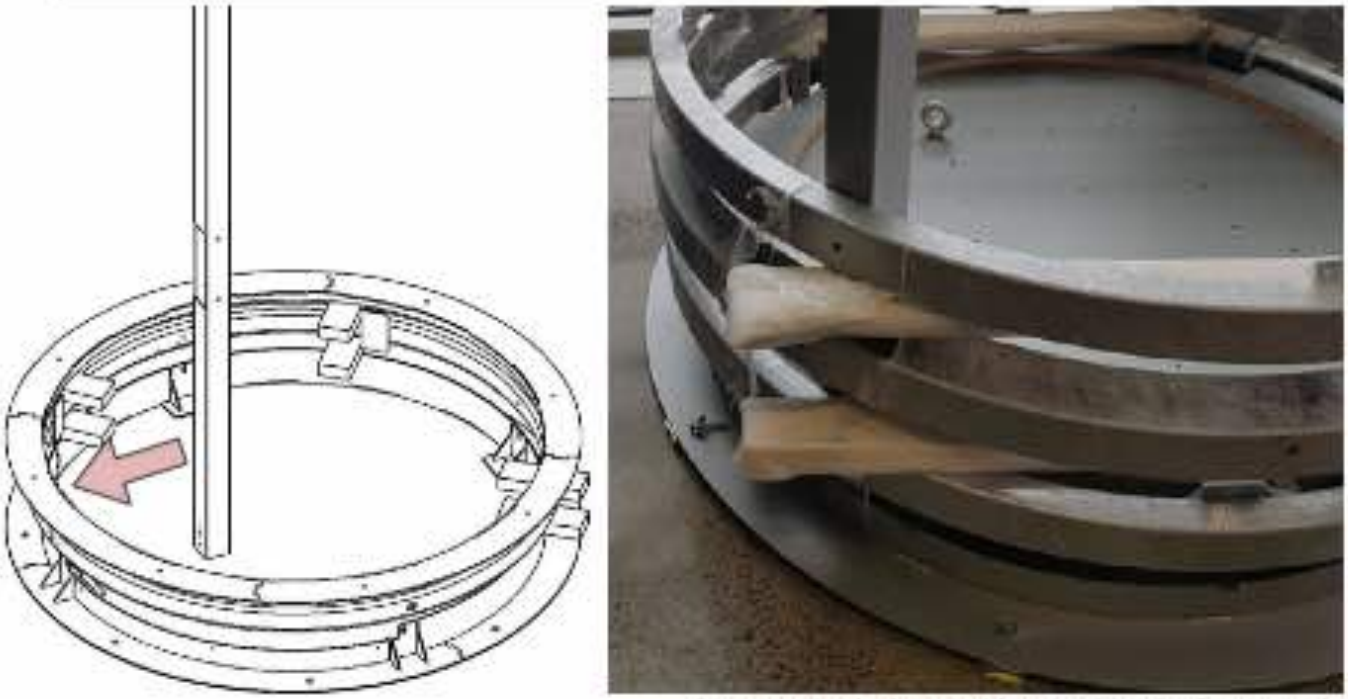

Figure 22: Stacked rings with one rail (LH Configuration shown)

7 After the rail is in the proper location, insert (1) 3/8"-16 x 1" hex bolt with flat washer (from kit PK-0001) through the slot in the base ring and into the threads on the rail as shown below. **TIGHTEN SNUGLY**. Final tightening will be performed after the rings have been oriented to their proper location.

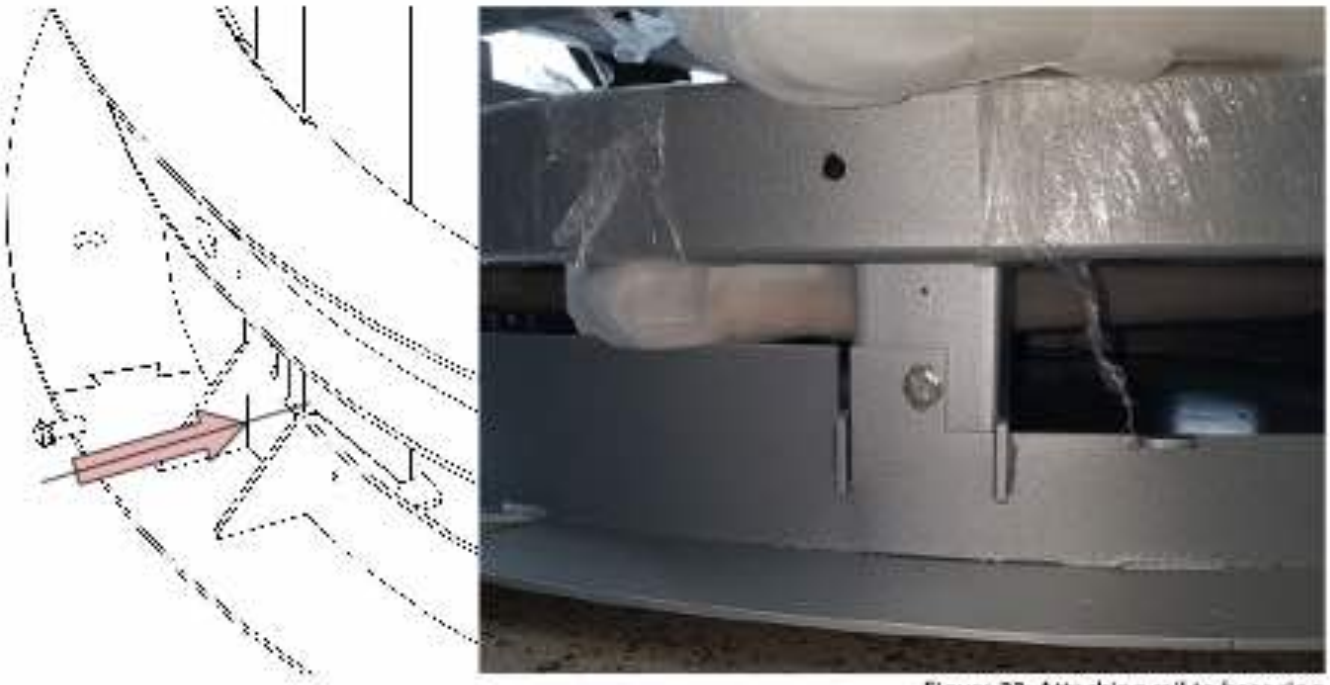

Figure 23: Attaching rail to base ring

8 The following illustration shows the EMI (interlock) rail attached.

> **NOTICE**
>
> The cab floor is not shown in this drawing for clarification. The cab floor MUST be in place prior to hoistway rail installation.

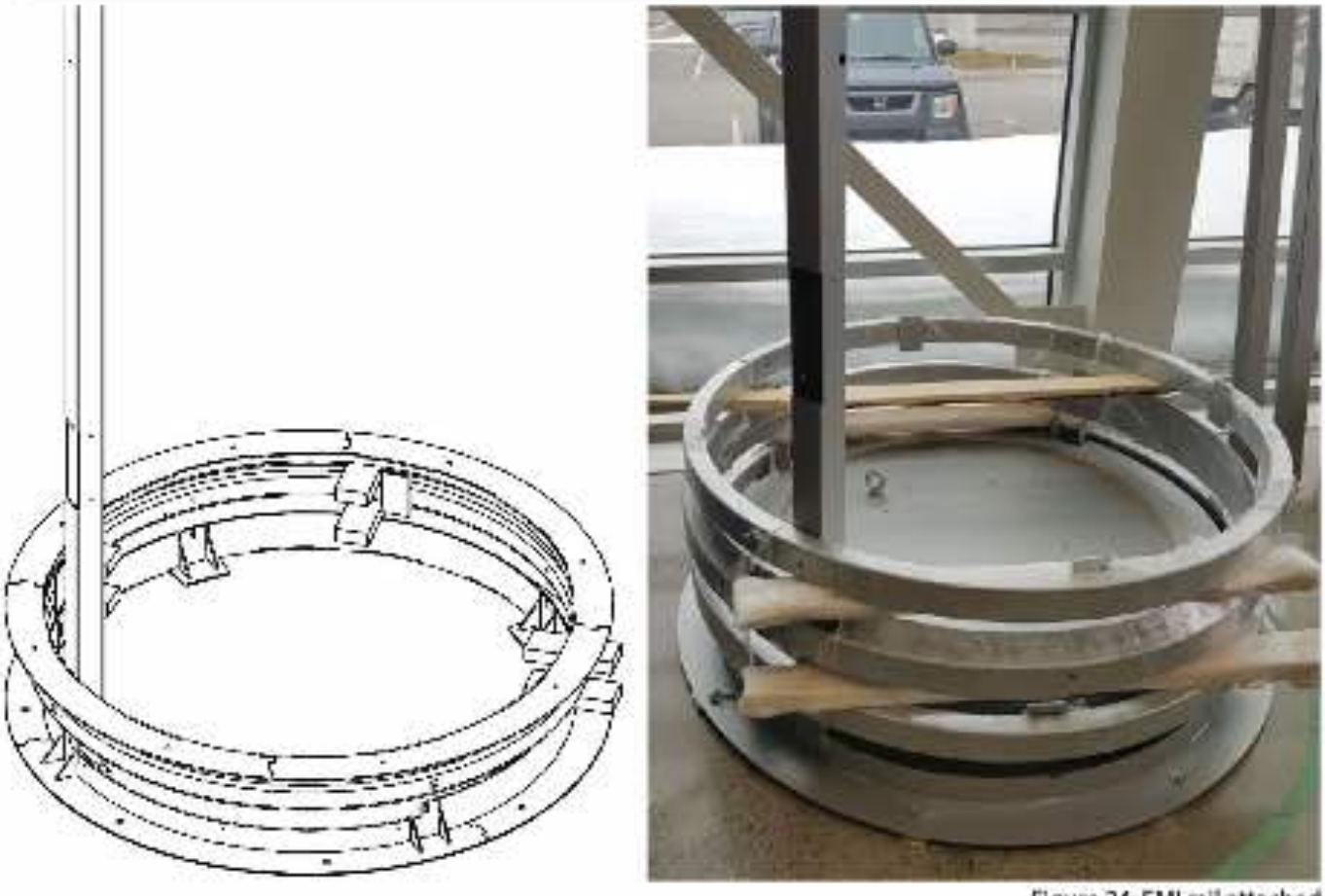

Figure 24: EMI rail attached

9 Repeat the above process until all four rails are loosely secured in place. The illustration below shows all four rails secured to the base ring.

NOTICE

The cab floor is not shown in this drawing for clarification. The cab floor MUST be in place prior to hoistway rail installation.

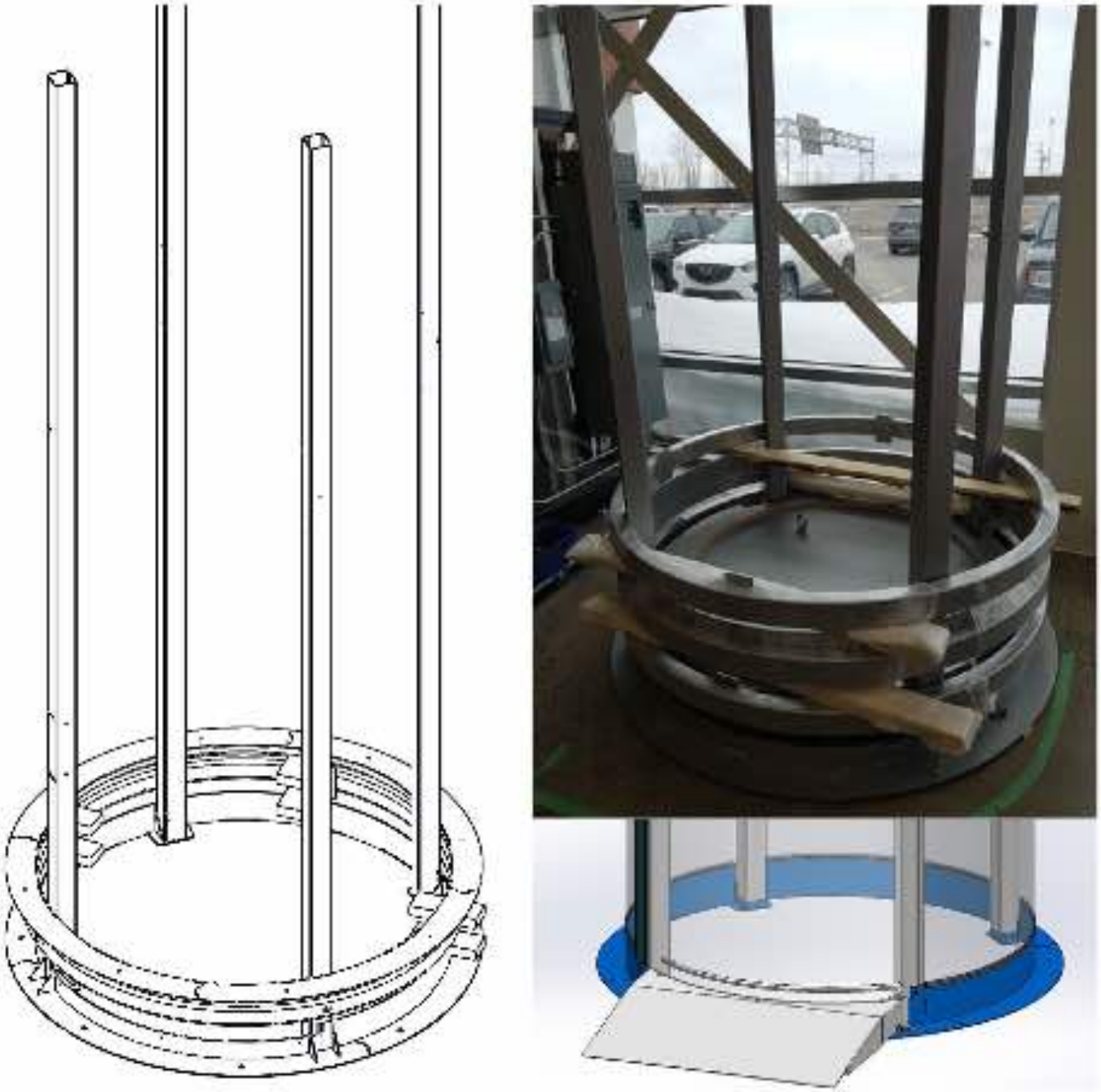

Figure 25: Base ring with four rails attached

Step 11
Lift and secure rings to rail

After the rails are loosely secured to the base ring, lift the header ring and ceiling ring into position and secure them to the rails and ceiling.

To accomplish this you will need the following tools and fasteners:

Item	Qty
3/8"-16 x 2 1/2" button head socket cap screw (in Hoistway Fastener Bag of kit PK-0016)	4
M10 x 2.5" black flat head wood screws (for ceiling ring if applicable)	8
Allen keys	
Header installation tool (P/N 99-0355) – **must be purchased separately from Savaria**	
Chain block (note that a winch is shown in the photos, however, we recommend using a chain block)	
Rigging straps and clevises	
Variable speed drill with pilot drill bit for M10 wood screws and hex bit for M10 screws	
Magnetic level	

1 Place the header installation tool into the top of two opposing rails as shown below.

NOTICE

The cab floor is not shown in this drawing for clarification. The cab floor MUST be in place prior to hoistway rail installation.

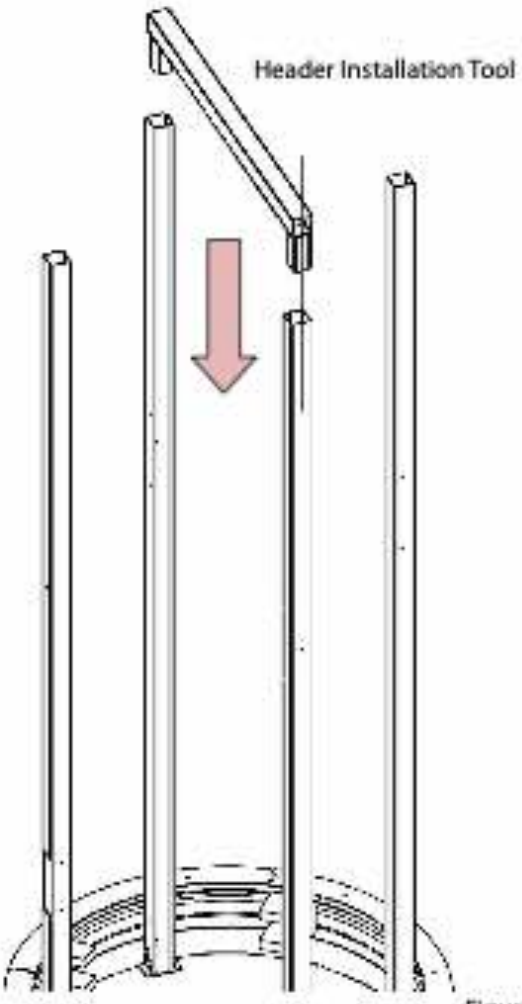

Figure 26: Insertion of header installation tool

NOTICE

A winch is shown in the following procedure, however, we recommend using a chain block. Also, even though the photos show round rings, the process is the same for octagonal rings.

2 After inserting the header installation tool, secure the winch to the header installation tool with a sling and clevis. Insert a rigging strap underneath the bottom of the header ring on opposite sides of the ring and wrap the strap around the header and ceiling ring (or balcony ring if applicable). Then, pull one end of the strap through the loop on the other end of the strap. Make sure the loop is centered in the ring to ensure an even lift of the rings.

3 Attach the ends of the straps together in the center of the ring with a clevis, and then secure the winch to the clevis as shown below.



Figure 27 : Secure winch to strap

4 Lift the rings slowly with the winch until the holes in the side of the header ring align with the holes in the outside faces of the rails as shown below.

NOTICE

It may be necessary to balance the rings while lifting with the winch. This will help prevent the rings from binding on the rails.





Figure 28: Lifting ring with winch

5 Insert (1) 3/8"-16 x 2 1/2" button head screw (from the Hoistway Fastener Bag in kit PK-0016) through the hole in the header ring. **DO NOT TIGHTEN COMPLETELY.** Tighten until approximately 1/8" - 1/4" of threads are remaining.

6 Repeat this process for all four holes in the header ring.

7 Remove both straps from the winch and from the rings.

8 If the current floor has a ceiling ring, complete the following:

   a. Remove the header installation tool from the top of the rails.

   b. Lift the ceiling ring into place, snugly against the ceiling of the current floor. Place a clamp on two rails under the ring to hold it up. This will allow you to plumb the rails with the ceiling ring in place.

9 If the next level is a thru-floor, go to the section, **Hoistway Installation (Thru-Floor Section)**.

10 If the next level is a balcony, go to the section, **Hoistway Installation (Balcony Section)**.

11 The illustration below shows the header ring in proper position and the ceiling ring sitting on the header ring.

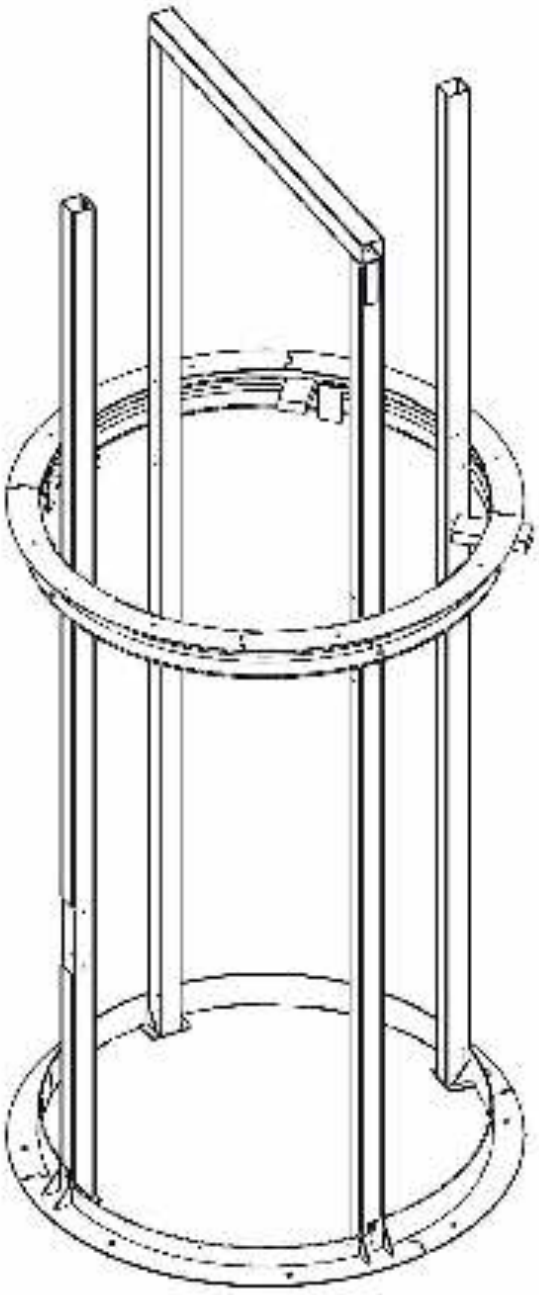

Header Ring Installed



NOTE: The cab floor is not shown in this drawing for clarification. The cab floor MUST be in place prior to hoistway rail installation.

Figure 29: Header ring installed

Step 12
Extra header ring/stabilizer bars (if FTF >14 ft)

If the floor-to-floor height (FTF) is greater than 14 ft (4.27 m), you will have an extra header ring and 2 stabilizer bars from that ring to the hoistway wall at either side.

1 Install the extra header ring in the same manner as the other rings.
2 Secure the bracket-end of the stabilizer bar assembly to the header ring using the hardware provided in kit PK-0022.
3 Measure and cut the stabilizer bar to size as needed.
   - **TECH TIP:** Thread a spare nut onto the bar before cutting the end and then unthread the nut. This will help clean out the threads and make it easier to thread the ends on it later. Replace the nut before continuing.
   - **NOTE:** The stabilizer bar gets threaded into the knuckles at each end of the bar.
4 Thread the end of the stabilizer bar into the knuckle at the end that will connect to the header ring bracket.
5 Secure the wall plate to the hoistway wall using the hardware provided in kit PK-0022.
6 Place the knuckle end of the stabilizer bar in the wall plate and then attach the knuckle to the wall plate. Do not fully tighten until both sides are in place.
7 Pull the tower structure so that it is plumb and square, and then lengthen or shorten the stabilizer bar to match.
8 Install the knuckle on the header ring assembly side.
9 Ensure the nuts at both ends of the bar are tightened down to the knuckles. This will prevent twisting of the hoistway rails.
10 Repeat the steps above for the stabilizer bar at the other side of the hoistway.

Bar secured to wall plate



Bar secured to header ring bracket



One stabilizer bar installed



Both stabilizer bars installed



Figure 30: Stabilizer bars (for floor-to-floor >14 ft)

Step 13
Align and plumb rails

The rails on every floor plumb independently of the rails on the previous floor. This allows the hoistway to be adjustable given the conditions on each floor, ensuring a plumb hoistway from top to bottom.

1 To align and plumb the rails, tighten the bolts that secure the rails to the base ring. **TIGHTEN COMPLETELY, BUT DO NOT STRIP THE THREADS.**

> IMPORTANT
>
> If the CURRENT FLOOR has a CEILING RING, continue to follow the steps in this section.
> If the NEXT FLOOR has a BALCONY RING, do not continue with this section; go to the section, **Hoistway Installation (Balcony Section)**.

2 Snug the bolts securing the header ring on the **current floor** to the rails.

3 Place the magnetic level on one rail and move the rail as necessary until plumb. Acceptable tolerances for all rails are ±0.1° or ±1/8" every 7 feet. Repeat this process for all four rails.

> CAUTION
>
> Maintaining these tolerances requires patience and a high quality level or plumb. Setting rails inaccurately **will** cause the cab to bind inside the hoistway. The Vuelift utilizes 24 shoes for the smoothest possible ride and this requires the rails to be plumb.

4 Tighten the bolts securing the header ring to the rails. **TIGHTEN COMPLETELY, BUT DO NOT STRIP THE THREADS.**

5 Check the rails with the magnetic level to ensure they are still plumb.

6 Secure the ceiling ring to the ceiling using the M10 x 2.5" wood screws.
- Pre-drill the holes for the wood screws prior to installing the screws.
- It may be necessary to add drywall anchors or wood 2x4 supports to secure the ceiling ring to the ceiling.

> IMPORTANT
>
> Note that the anchors provided by Savaria are standard/typical anchors and are not suitable for all site conditions. Always make sure the anchors used are proper for the type of surface on site.

HOISTWAY INSTALLATION (THRU-FLOOR SECTION)

Constructing a **THRU-FLOOR HOISTWAY SECTION** is very similar to constructing a first floor hoistway section.

The thru-floor hoistway construction process follows these basic steps which are described in detail on the following pages.

1 Measure the floor to floor height.
2 Cut the rails to length.
3 Stack the rings for lifting.
4 Insert the rail splines.
5 Secure the rails at the mid-floor ring.
6 Lift and secure the rings.

Step 14
Measure floor to floor height (thru-floor)

IMPORTANT: *Precise measurement of the floor to floor height is imperative for proper construction of the hoistway and will help to ensure proper travel of the cab.*

To measure the floor to floor height for a **THRU-FLOOR HOISTWAY SECTION**:

1 Measure from the top of the finished floor at which you are installing to the top of the finished floor above (i.e. from the top of the finished floor on the 2nd floor to the top of the finished floor on the 3rd floor).
2 If the floor you are measuring is the **TOP FLOOR**, use the chart below to determine the rail lengths.

Minimum floor to ceiling height	Hoistway rail length	Cab speed	Cab type
96"	84 7/8"	32 ft/min	76.5'' Car
108"	96 7/8"	32 ft/min	84'' Car
104"	92 7/8"	32 ft/min	80'' Car

Step 15
Cut rails to length (thru-floor)

Cut the **3 standard rails** and **1 EMI (interlock) rail** using the measurements from the previous section. To determine which end of the rail is the bottom, refer to the illustration below.

NOTICE

When cutting the rails to length, always cut the top of the rails. The bottom of the rails is the end with the three holes close together, with the top end having no holes.

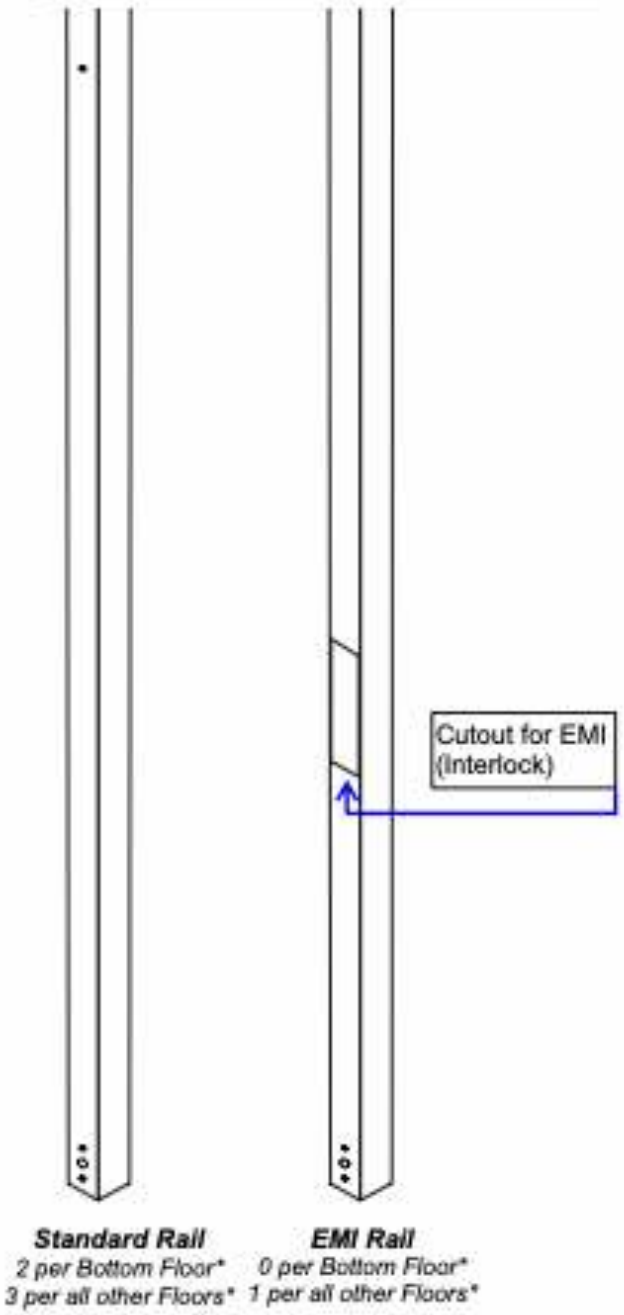

*If a floor has multiple hoistway doors, it will one EMI Rail per door.

Figure 31: Determining bottom of rail

To cut the rails:

1. Mark the location of the cut on the rail (using a permanent marker or pencil) by **measuring from the bottom of the rail towards the top**.
   - **IMPORTANT**: You MUST measure from bottom to top so you DO NOT cut off the three holes at the bottom end of the rail.
2. Generate a line through the mark with a square.
3. Cut along the line using a low RPM metal saw with a carbide blade.
   - **NOTE:** A low RPM metal saw is by far the best tool for achieving a good cut.
   - **NOTE:** Using other methods of cutting may impact the squareness of the cut. **It is imperative that the cuts be square so the rail contact surface area is sufficient**.
   - **NOTE**: Directly after cutting the rails, be sure to deburr and remove any sharp edges.

NOTICE

It may be necessary to measure and mark the cut line on each face of the rail to ensure the cuts remain square.

Both the length and squareness of the cut are important. Each rail must be cut to **exactly** the same length (± 1/32").

CAUTION

If you cut the rails too short, **stop the job** and contact Savaria for assistance.
DO NOT attempt to change hole locations as this will create further installation problems.

Step 16
Stack rings for lifting (thru-floor)

Stacking the rings ensures the easiest installation. For a **THRU-FLOOR** configuration, the rings stack in the following order:

- Mid-floor ring - on bottom
- Header ring - in middle (note that an extra header ring may be needed for floor-to-floor height > 14 ft)
- Ceiling ring - on top

The illustration below shows the different types of rings.

> **CAUTION**
> NOTE THE FOLLOWING RING ORIENTATIONS:
> Balcony Ring: Cutout on ring must be oriented UP
> Header Ring: Holes for door hinge must be pointed DOWN and be on both sides of the door opening
> Ceiling Ring: Vertical flange on ring must be oriented DOWN
> Mid-floor Ring: Cutout on ring must be oriented UP

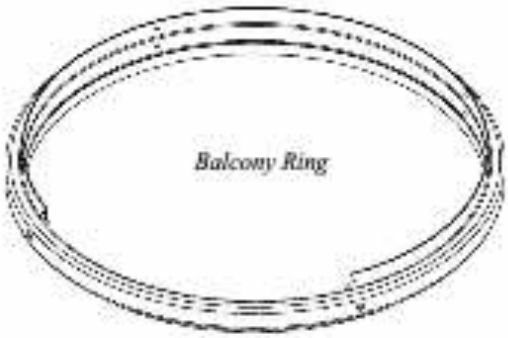

CAUTION
Cutout on Balcony Ring must be oriented UP



CAUTION
Holes for door hinge on Header Ring must be pointed DOWN and be on both sides of door opening



CAUTION
Vertical flange on Ceiling Ring must be oriented DOWN



CAUTION
Cutout on Pit/Mid-floor Ring must be oriented UP

Figure 32: Ring types

The illustration below shows the proper alignment of the rings when the next floor is a thru-floor.

Note the orientation of the rings as shown below.

- The notch in the mid-floor ring should be oriented for where the hoistway door will open.
- The mid-floor ring should sit flush on the finished floor with the vertical face on the **OUTSIDE** of the rails.
- If applicable, the header ring *with the tabs removed* should be oriented so the trimmed portion is **UP** and the trimmed tabs are located where the hoistway door will open and to the RIGHT of the hoistway door opening (facing the hoistway from the outside).

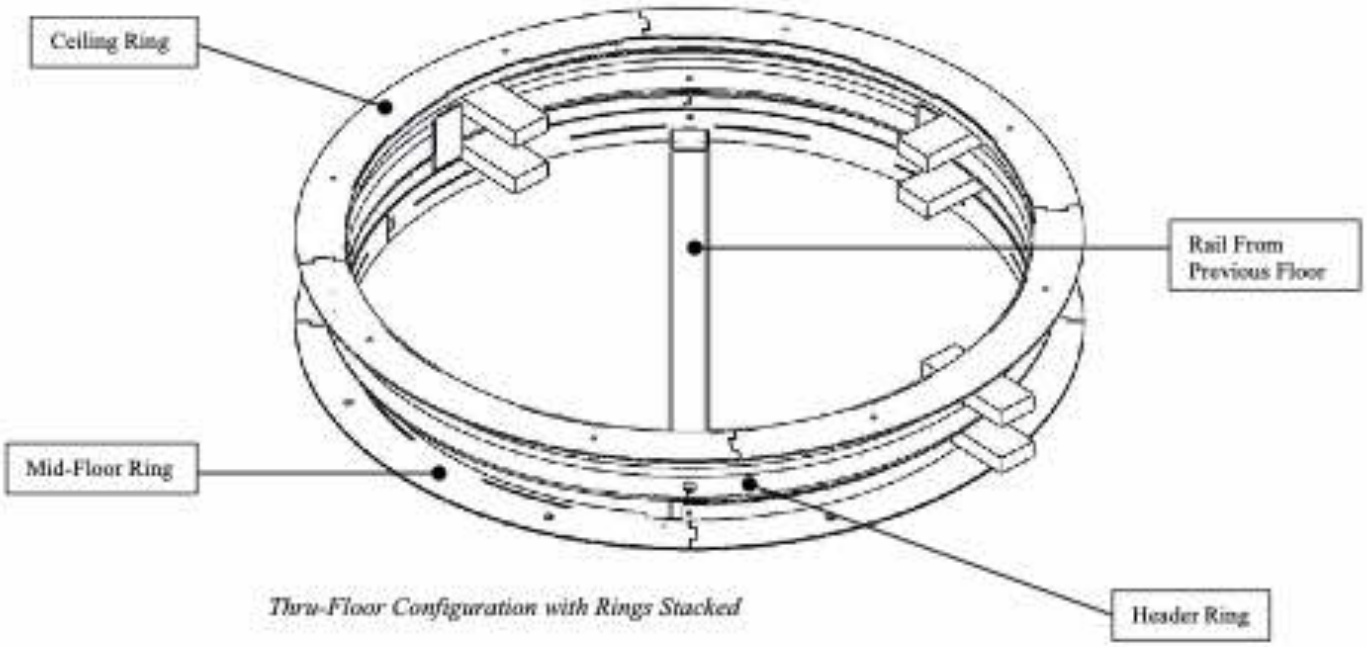

Figure 33: Thru-floor configuration with rings stacked

Step 17
Insert rail splines (thru-floor)

Before stacking the next set of rails, rail splines must be inserted into the **BOTTOM** of each rail. These splines are cut to length at the factory and only require insertion and fastening with a set screw. For this step you will need the following tools, fasteners and parts:

Item	Qty
EMI rail (cut to proper length)	1
Standard rail (cut to proper length)	3
Rail splines (in kit PK-0003)	4
Countersunk screws (in Hoistway Fastener Bag of kit PK-0016)	4

1 Begin with a rail (standard or EMI, as this will be repeated for all four rails).
2 Insert one rail spline as shown in below.

> IMPORTANT
> Note the orientation of the spline. The holes are more towards the **TOP** of the spline. After insertion into the rail, 9" of spline will be sticking out of the rail.

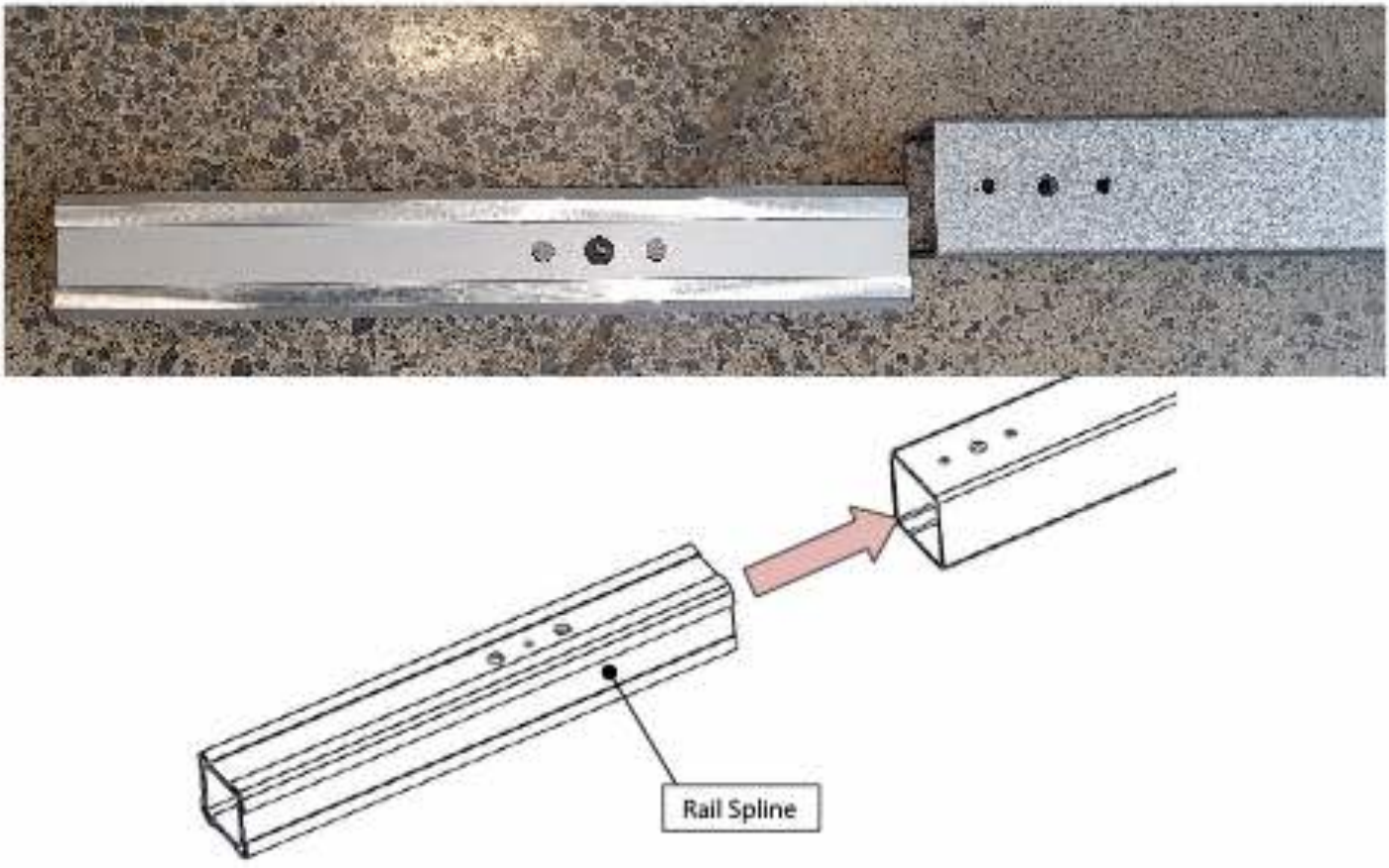

Figure 34: Insert spline in rail

3 Insert the spline into the rail until the center hole in the spline aligns with the countersunk hole in the rail.
4 Insert the screw into the countersunk hole in the rail as shown below. The rail splines are held in place with a well nut which is a rubber piece with a steel nut inside. As the well nut tightens, it "mushrooms" against the metal on the inside of the spline. **This means the nut will NEVER get completely tight.** Tighten until the rail spline is held firmly in place and does not wiggle.
5 The head of the screw should sit flush with the face of the rail.

6 Repeat this section for the 3 remaining rails and splines.

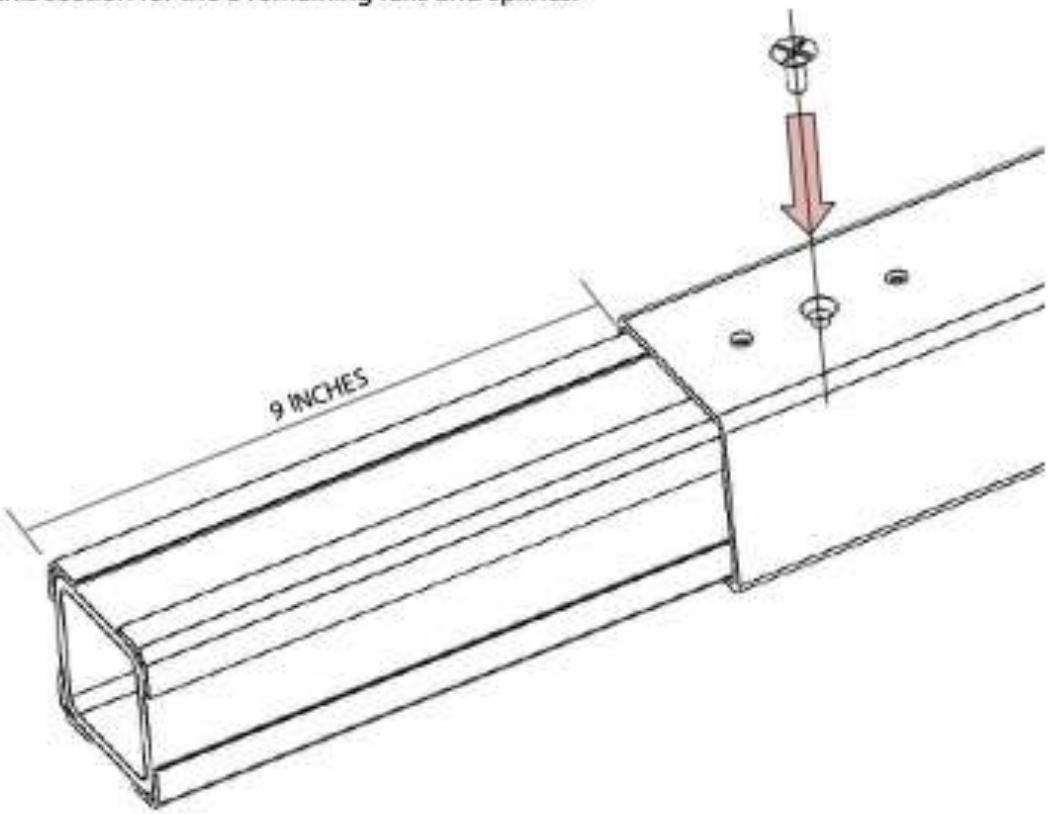

Figure 35: Insert spline in rail

Step 18
Secure rails at mid-floor ring (thru-floor)

To attach the rails to the mid-floor ring, the following tools and fasteners are required:

Item	Qty
3/8" flat washers (in kit PK-0005)	4
3/8"-16 x 1" hex bolt (in kit PK-0005)	4
9/16" socket	
Socket wrench	
6" socket extension	

NOTICE
We recommend installing the EMI (interlock) rail first.

1 Orient the rail with the holes facing *away* from the center of the ring.
2 Insert the rail and spline assembly into the **TOP** of the rail from the previous floor as shown below.
3 After the rail is in the proper location, push down until the two rails are flush against each other.
4 Insert (1) 3/8"-16 x 1" hex bolt with flat washer (from kit PK-0005) through the hole in the mid-floor ring and into the threads on the rail. **DO NOT TIGHTEN COMPLETELY.** Tighten until approximately 1/4" - 1/8" of threads remain exposed. Final tightening will be performed after the rings have been plumbed and oriented to their proper location.
5 Repeat this process until all four rails with splines are in place.

CAUTION
In determining the rail location, you must orient the **EMI (interlock) rail** in the proper position. With the EMI rail positioned to the **LEFT** of the notch as facing the mid-floor ring, this orientation assumes a **Left Hand Swing** door (hinges on the right as you face the hoistway) for the middle floor. For a **Right Hand Swing** door, orient the EMI rail to the **RIGHT** of the notch in the mid-floor ring as you face the hoistway.

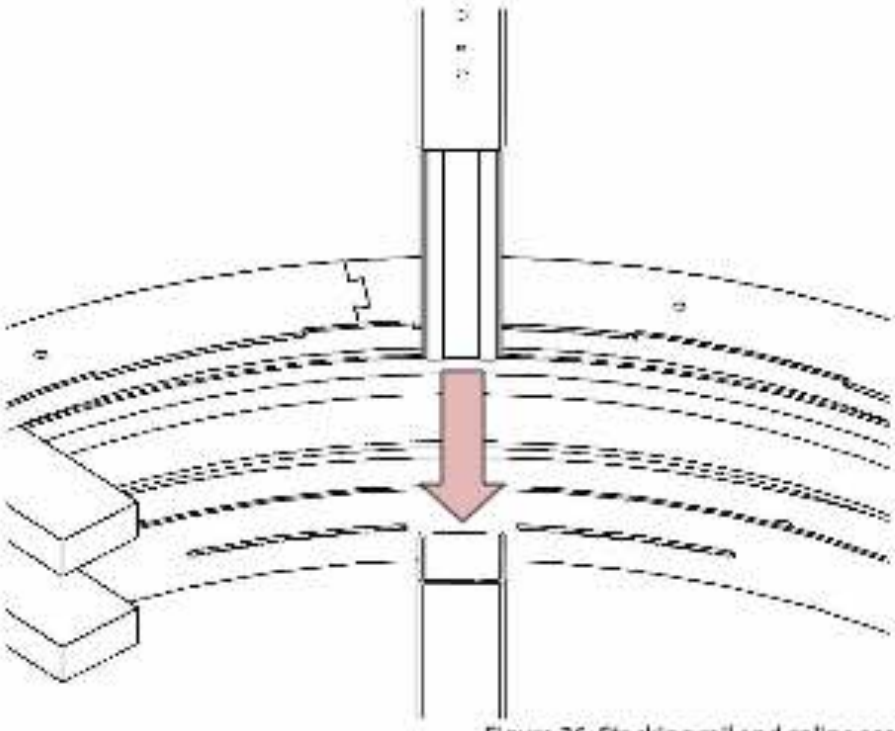

Figure 36: Stacking rail and spline assembly to previous rail

Step 19
Lift and secure rings to rail (thru-floor)

After the rails are loosely secured to the mid-floor ring, lift the header ring and ceiling ring into position and secure them to the rails and ceiling.

To accomplish this you will need the following tools and fasteners:

Item	Qty
3/8"-16 x 2 1/2" socket cap screw (in Hoistway Fastener Bag of kit PK-0016)	4
Allen keys	
Header installation tool (P/N 99-0355) – **must be purchased separately from Savaria**	
Chain block (note that a winch is shown in the photos, however, we recommend using a chain block)	
Rigging straps and clevises	
M10 x 2.5" black flat head wood screws (for ceiling ring)M10 x 2.5" black flat head wood screws (for ceiling ring)	8
Variable speed drill with pilot drill bit for M10 wood screws and hex bit for M10 screws	
Magnetic digital level	

IMPORTANT

If this is the TOP FLOOR, and this floor has a LOW-CLEARANCE ceiling (floor to ceiling height of less than 105.5") do not continue with this section; go to the section, **Head Assembly Installation**. If this is the TOP FLOOR and the floor has a floor to ceiling height of more than 105.5", continue with this section.

1 Place the header installation tool into the top of two opposing rails as shown below.

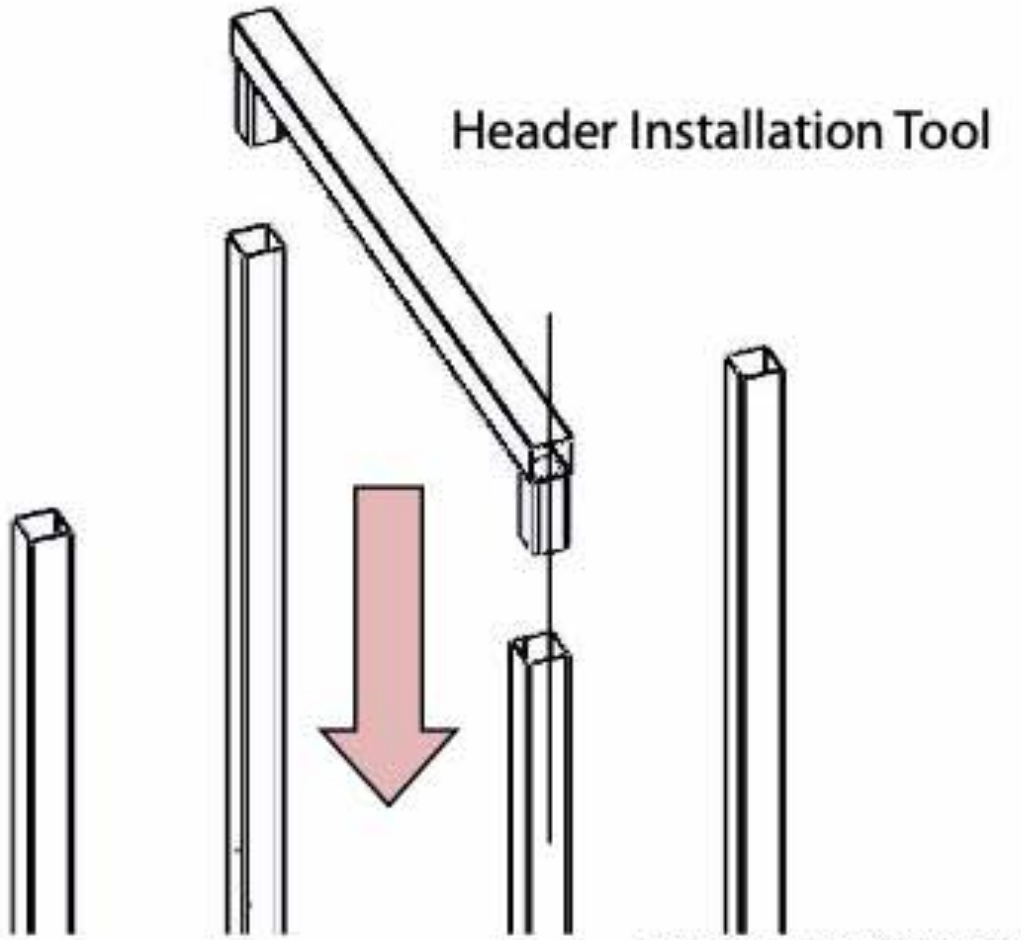

Figure 37: Insertion of header installation tool

NOTICE

a winch is shown in the following procedure, however, we recommend using a chain block. Also, even though the photos show round rings, the process is the same for octagonal rings.

2 After inserting the header installation tool, secure the winch to the header installation tool with a sling and clevis. Insert a rigging strap underneath the bottom of the header ring on opposite sides of the ring and wrap the strap around the header and ceiling ring (or balcony ring if applicable). Then, pull one end of the strap through the loop on the other end of the strap. Make sure the loop is centered in the ring to ensure an even lift of the rings.

3 Attach the ends of the straps together in the center of the ring with a clevis, and then secure the winch to the clevis.

4 Lift the rings slowly with the winch until the holes in the side of the header ring align with the holes in the outside faces of the rails.

NOTICE

It may be necessary to balance the rings while lifting with the winch. This will help prevent the rings from binding on the rails.

5 Insert (1) 3/8"-16 x 2 1/2" button head screw (from Hoistway Fastener Bag of kit PK-0016) through the hole in the header ring. **DO NOT TIGHTEN COMPLETELY.** Tighten until approximately 1/8" - 1/4" of threads are remaining.

6 Repeat this process for all four holes in the header ring.

7 Remove both straps from the winch and from the rings.

8 If the current floor has a ceiling ring, complete the following:

a. Remove the header installation tool from the top of the rails.

b. Lift the ceiling ring into place, snugly against the ceiling of the current floor. Place a clamp on two rails under the ring to hold it up. This will allow you to plumb the rails with the ceiling ring in place.

9 If the next level is a thru-floor, follow the steps in this section, **Hoistway Installation (Thru-Floor Section)**.

10 If the next level is a balcony, go to the section, **Hoistway Installation (Balcony Section)**.

11 The illustration below shows the header ring in proper position and the ceiling ring sitting on the header ring.

HOISTWAY INSTALLATION (BALCONY SECTION)

Constructing a **BALCONY HOISTWAY SECTION** is very similar to constructing a first floor hoistway section.

The balcony hoistway construction process follows these basic steps which are described in detail on the following pages.

1 Measure the floor to floor height.
2 Cut the rails to length.
3 Stack the rings for lifting.
4 Insert the rail splines.
5 Insert the rail sections.
6 Lift and secure the rings.

Step 20
Measure floor to floor height (balcony)

IMPORTANT: *Precise measurement of the floor to floor height is imperative for proper construction of the hoistway and will help to ensure proper travel of the cab.*

To measure the floor to floor height for a **BALCONY HOISTWAY SECTION**:

1 Measure from the top of the finished floor at which you are installing to the top of the finished floor above (i.e. from the top of the finished floor on the 2nd floor to the top of the finished floor on the 3rd floor).
2 Measure twice from the two hoistway rails directly adjacent to the balcony and take the **maximum** measurement.
3 If the floor you are measuring is the **TOP FLOOR**, use the chart below to determine the rail lengths.

Minimum floor to ceiling height	Hoistway rail length	Cab speed	Cab type
96"	84 7/8"	32 ft/min	76.5'' Car
108"	96 7/8"	32 ft/min	84'' Car
104"	92 7/8"	32 ft/min	80'' Car

Step 21
Cut rails to length (balcony)

Cut the **3 standard rails** and **1 EMI (interlock) rail** using the measurements from the previous section. To determine which end of the rail is the bottom, refer to the illustration below.

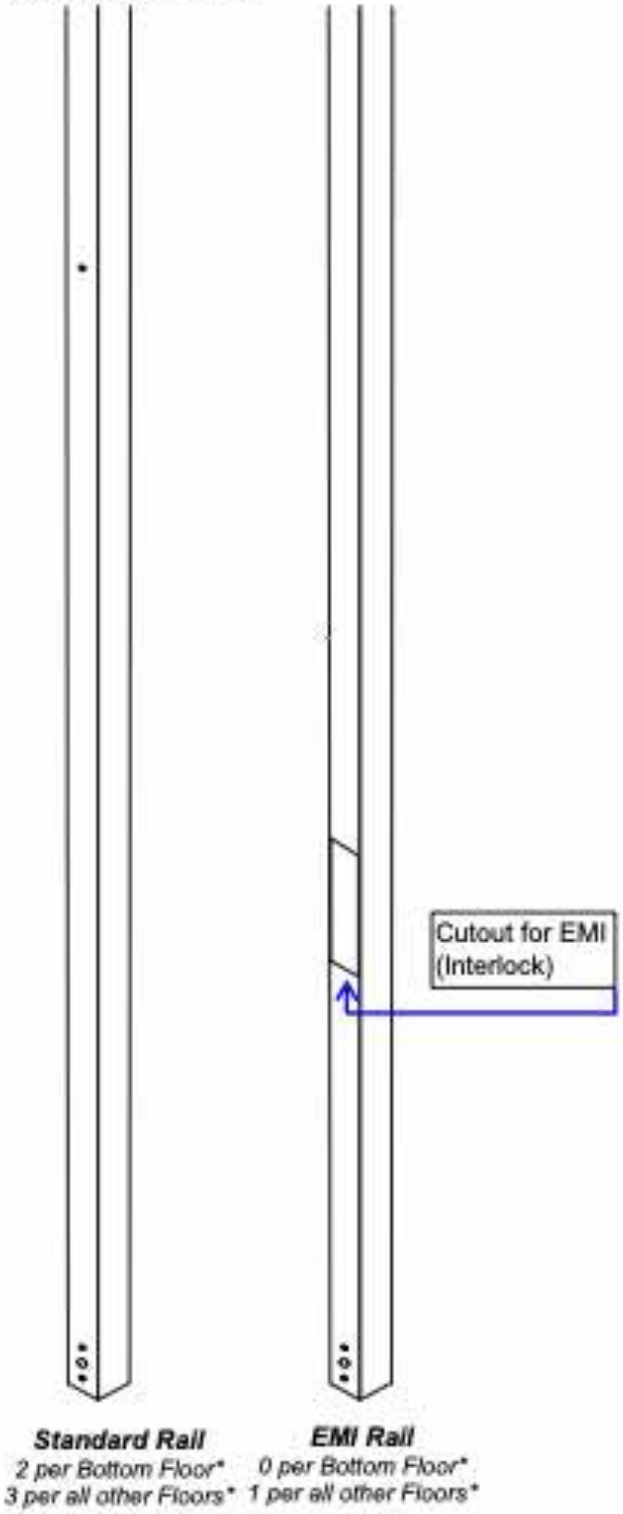

Figure 38: Determining bottom of rail

To cut the rails:

1 Mark the location of the cut on the rail (using a permanent marker or pencil) by **measuring from the bottom of the rail towards the top**.
   - **IMPORTANT**: You MUST measure from bottom to top so you DO NOT cut off the three holes at the bottom end of the rail.
2 Generate a line through the mark with a square.
3 Cut along the line using a low RPM metal saw with a carbide blade.
   - **NOTE:** A low RPM metal saw is by far the best tool for achieving a good cut.
   - **NOTE:** Using other methods of cutting may impact the squareness of the cut. **It is imperative that the cuts be square so the rail contact surface area is sufficient**.
   - **NOTE**: Directly after cutting the rails, be sure to deburr and remove any sharp edges.

NOTICE

It may be necessary to measure and mark the cut line on each face of the rail to ensure the cuts remain square.

Both the length and squareness of the cut are important. Each rail must be cut to **exactly** the same length (± 1/32").

CAUTION!

If you cut the rails too short, **stop the job** and contact Savaria for assistance.
DO NOT attempt to change hole locations as this will create further installation problems.

The illustration below shows the location of the balcony ring for the current floor.

Note the orientation of the rings as shown below.

- The notch in the balcony ring should be oriented to the location where the hoistway door will open (facing the balcony).
- If applicable, the header ring *with the tabs removed* should be oriented so the trimmed portion is **UP** and the trimmed tabs are located where the hoistway door will open and to the RIGHT of the hoistway door opening (facing the hoistway from the outside).

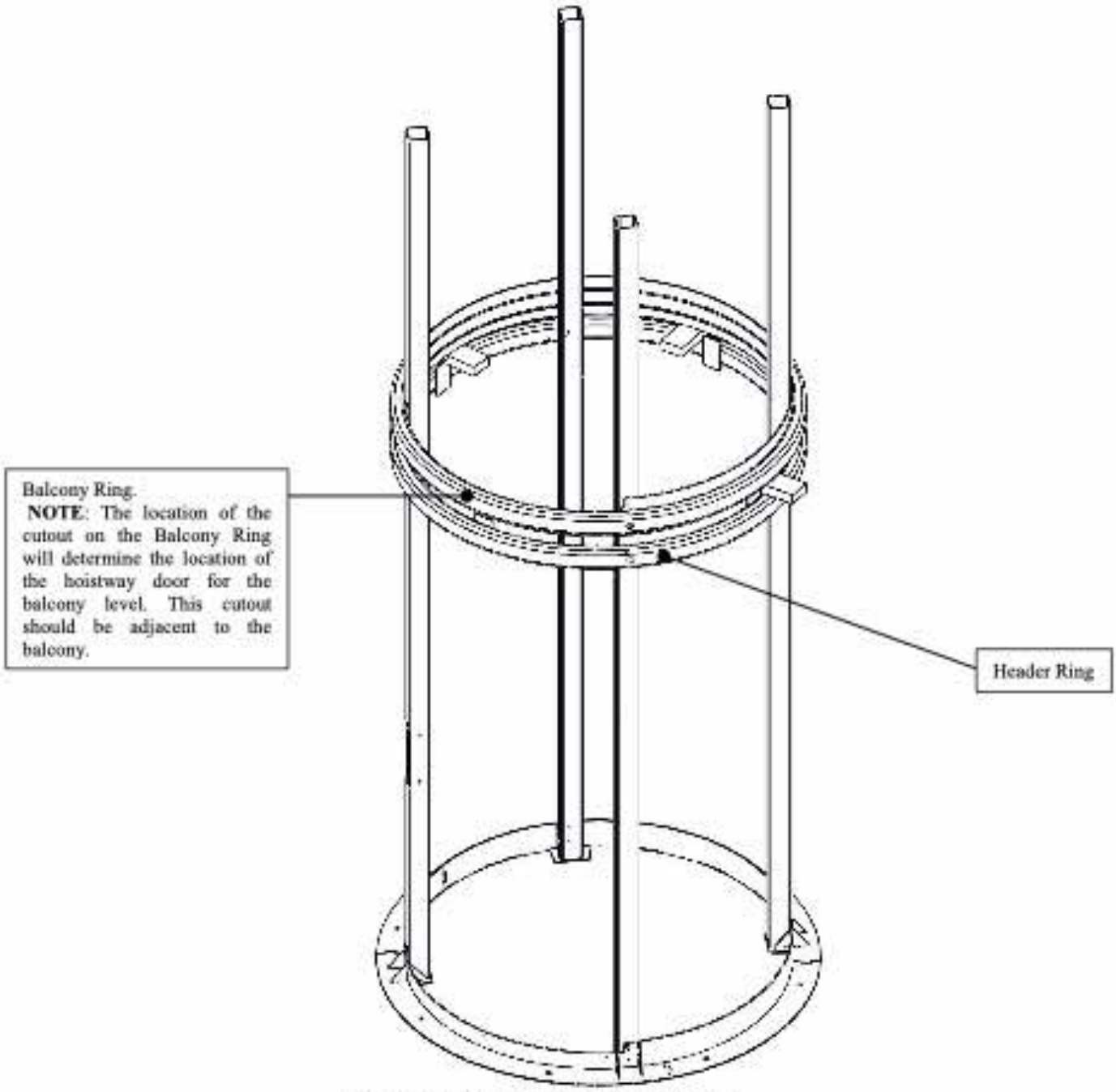

Figure 39: Balcony configuration from previous floor

The illustration below shows the rings stacked for current and subsequent balcony levels.

> **CAUTION**
>
> DO NOT lift more than 3 unsecured rings at any time. The illustration below shows the maximum number of unsecured stacked rings given any configuration..

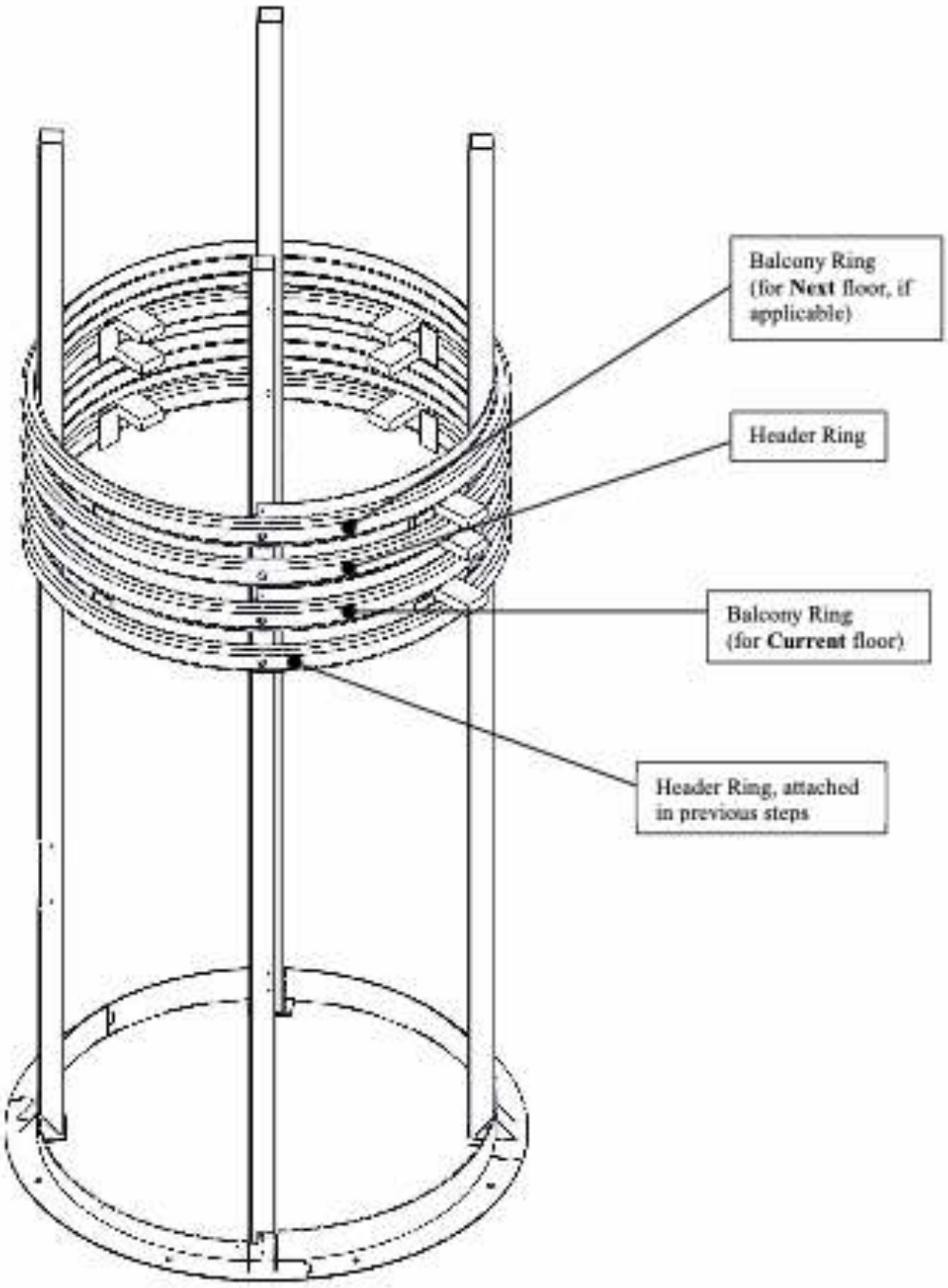

Balcony Configuration from Previous Floor with Stacked Rings

Figure 40: Balcony configuration from previous floor with stacked rings

Step 22
Insert rail splines (balcony)

Before stacking the next set of rails, rail splines must be inserted into the **BOTTOM** of each rail. These splines are cut to length at the factory and only require insertion and fastening with a set screw. For this step you will need the following tools, fasteners and parts:

Item	Qty
EMI rail (as cut to proper length)	1
Standard rail (as cut to proper length)	3
Rail splines (in kit PK-0003)	4
Countersunk screws (in Hoistway Fastener Bag of kit PK-0016)	4

1 Begin with a rail (standard or EMI, as this will be repeated for all four rails).

2 Insert one rail spline as shown in below.

> **IMPORTANT**
> The holes are more towards the **TOP** of the spline. After insertion into the rail, 9" of spline will be sticking out of the rail.

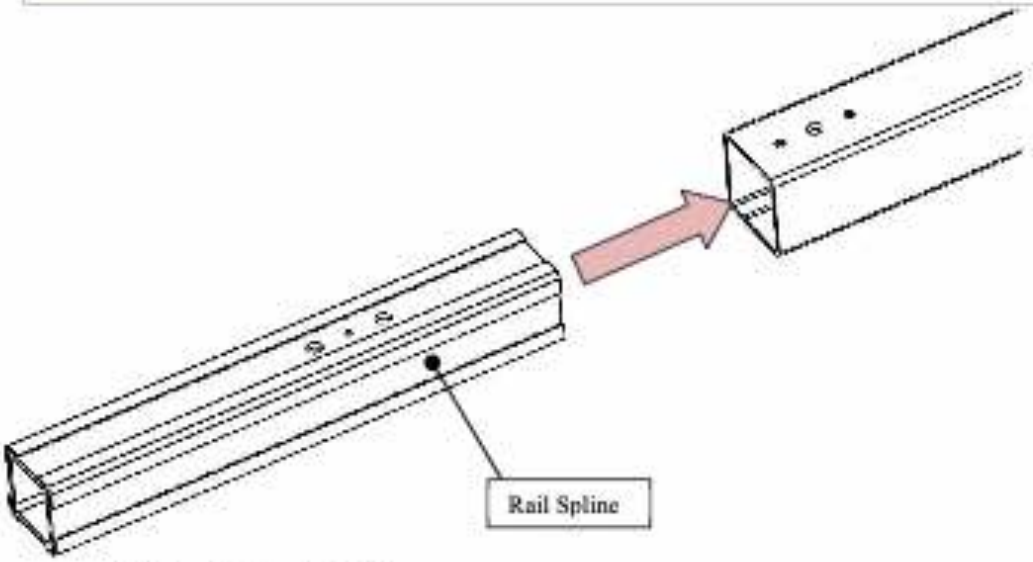

Spline Insertion in Rail



Figure 41: Insert spline in rail

3 Insert the spline into the rail until the center hole in the spline aligns with the countersunk hole in the rail.

4 Insert the screw into the countersunk hole in the rail as shown below. The rail splines are held in place with a well nut which is a rubber piece with a steel nut inside. As the well nut tightens, it "mushrooms" against the metal on the inside of the spline. **This means the nut will NEVER get completely tight.** Tighten until the rail spline is held firmly in place and does not wiggle.

5 The head of the screw should sit flush with the face of the rail.

6 Repeat this section for the three remaining rails and splines.

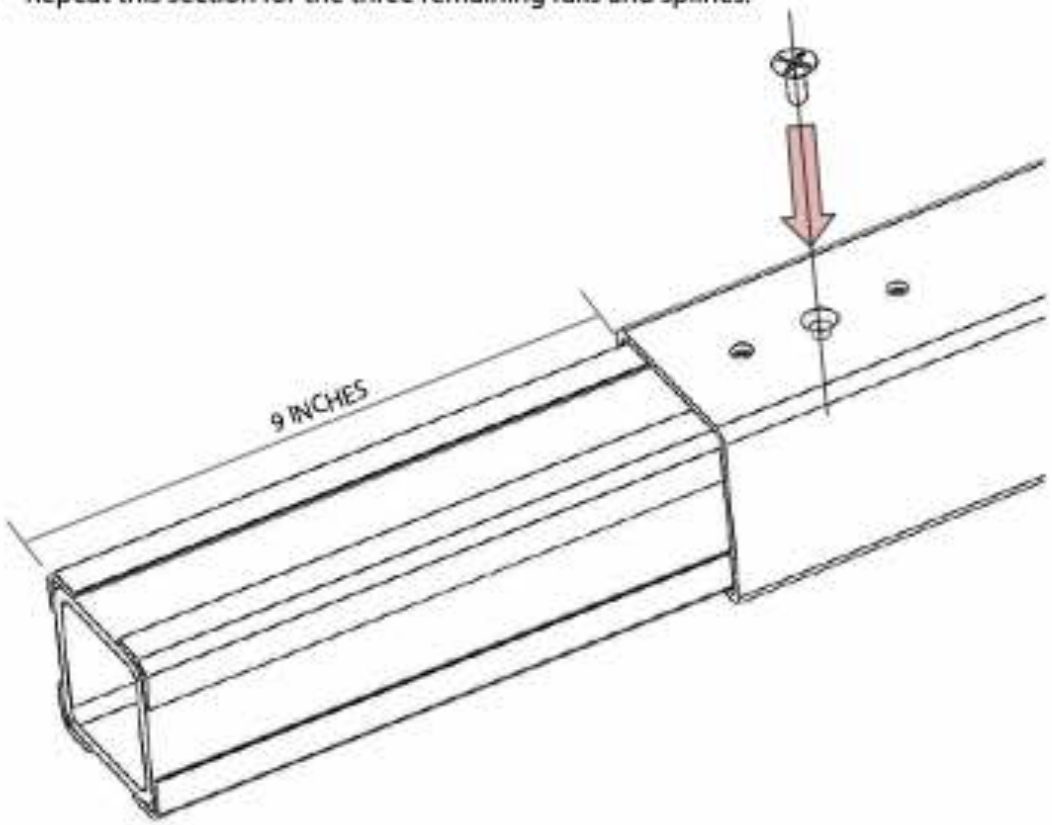

Figure 42: Secure spline in rail

Step 23
Insert rail sections (balcony)

1 Insert the rails for the current floor. The following parts are required:

Item	Qty
EMI rail with spline (from the previous step)	1
Standard rails with splines (from the previous step)	4

NOTICE
We recommend installing the EMI (interlock) rail first.

1 Orient the rail with the holes facing **away** from the center of the ring.
2 Insert the rail and spline assembly into the **TOP** of the rail from the previous floor as shown below.
3 After the rail is in the proper location, push down until the two rails are flush against each other.
4 Repeat this process until all four rails with splines are in place.

CAUTION
In determining the rail location, you must orient the **EMI (interlock) rail** in the proper position. With the EMI rail positioned to the **LEFT** of the notch as facing the mid-floor ring, this orientation assumes a **Left Hand Swing** door (hinges on the right as you face the hoistway) for the middle floor. For a **Right Hand Swing** door, orient the EMI rail to the **RIGHT** of the notch in the mid-floor ring as you face the hoistway.

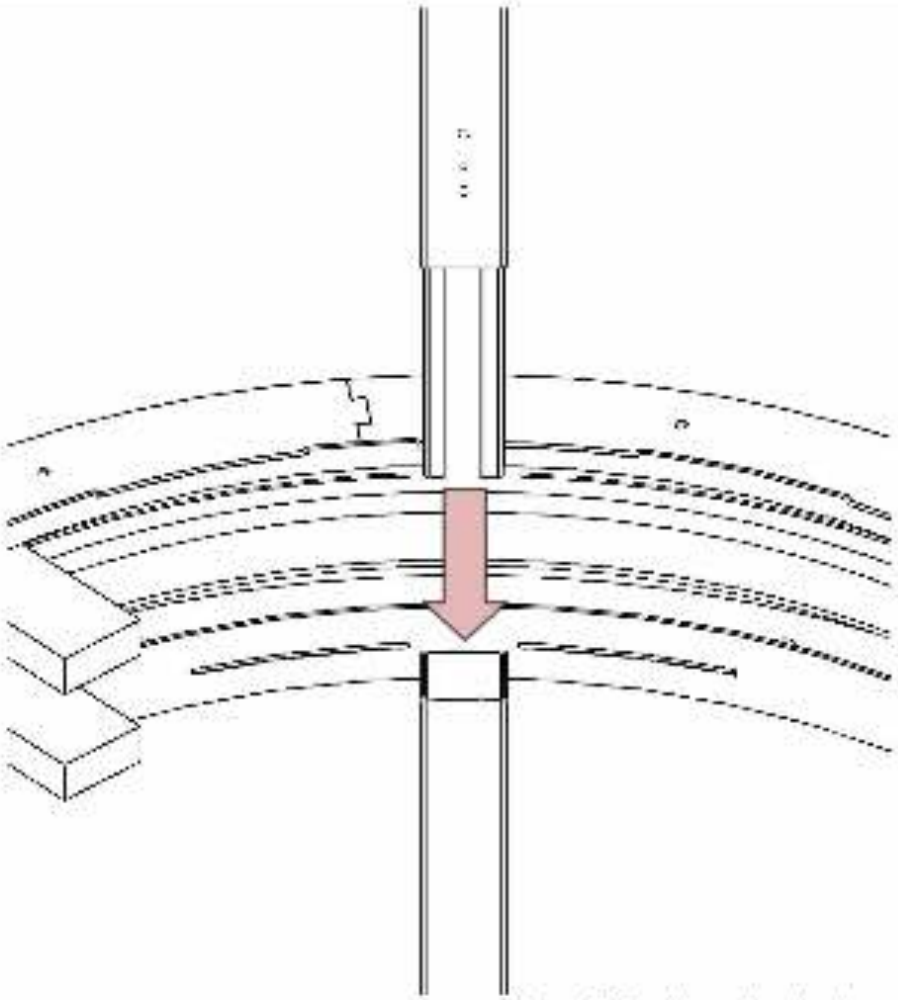

Figure 43: Stacking rail and spline assembly to previous rail

Step 24
Lift and secure rings to rail (balcony)

After the rails are inserted, lift the balcony ring (for the current floor), header ring, and ceiling ring (or balcony ring if applicable) into position and secure them to the rails.

To accomplish this you will need the following tools and fasteners:

Item	Qty
3/8"-16 x 2 1/2" button head socket cap screw (in Hoistway Fastener Bag of kit PK-0016)	4
Allen keys	
Header installation tool (P/N 99-0355) – **must be purchased separately from Savaria**	
Chain block (note that a winch is shown in the photos, however, we recommend using a chain block)	
Rigging straps and clevises	
M10 x 2.5" black flat head wood screws (for ceiling ring if applicable)	8
Variable speed drill with pilot drill bit for M10 wood screws and hex bit for M10 screws	
Magnetic level	

IMPORTANT

If this is the TOP FLOOR, and this floor has a LOW-CLEARANCE ceiling (floor to ceiling height of less than 105.5") do not continue with this section; go to the section, **Head Assembly Installation**. If this is the TOP FLOOR and the floor has a floor to ceiling height of more than 105.5", continue with this section.

1 Place the header installation tool into the top of two opposing rails as shown below.

NOTICE

If you don't have the header installation tool, use 2x4 pieces of wood for legs, attached to a 4x4 with long wood screws. Ensure that it is strong enough to lift at least 250 lbs.

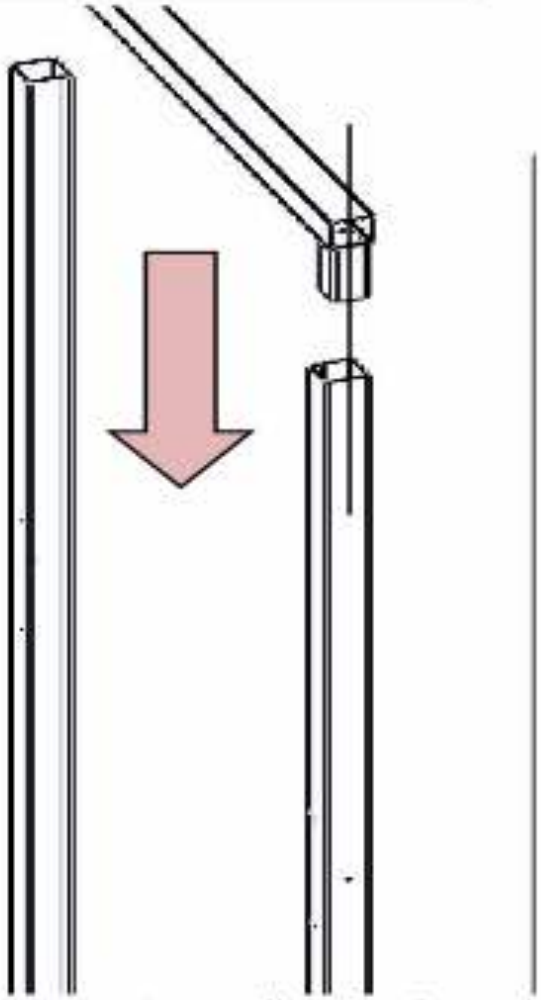

Figure 44: Insertion of header installation tool

NOTICE

a winch is shown in the following procedure, however, we recommend using a chain block. Also, even though the photos show round rings, the process is the same for octagonal rings.

2 After inserting the header installation tool, secure the winch to the header installation tool with a sling and clevis. Insert a rigging strap underneath the bottom of the header ring on opposite sides of the ring and wrap the strap around the header and ceiling ring (or balcony ring if applicable). Then, pull one end of the strap through the loop on the other end of the strap. Make sure the loop is centered in the ring to ensure an even lift of the rings.

3 Attach the ends of the straps together in the center of the ring with a clevis, and then secure the winch to the clevis as shown below.

4 Lift the rings slowly with the winch until the holes in the side of the header ring align with the holes in the outside faces of the rails as shown below.

> **NOTICE**
>
> It may be necessary to balance the rings while lifting with the winch. This will help prevent the rings from binding on the rails.

5 Insert (1) 3/8"-16 x 2 1/2" button head screw (from Hoistway Fastener Bag in kit PK-0016) through the hole in the header ring. **DO NOT TIGHTEN COMPLETELY.** Tighten until approximately 1/8" - 1/4" of threads are remaining.

6 Repeat this process for all four holes in the header ring.

7 Remove both straps from the winch and from the rings.

8 If the current floor has a ceiling ring, complete the following:

   a. Remove the header installation tool from the top of the rails.

   b. Lift the ceiling ring into place, snugly against the ceiling of the current floor. Place a clamp on two rails under the ring to hold it up. This will allow you to plumb the rails with the ceiling ring in place.

9 If the next level is a thru-floor, follow the steps in this section, **Hoistway Installation (Thru-Floor Section)**.

10 If the next level is a balcony, go to the section, **Hoistway Installation (Balcony Section)**.

HEAD ASSEMBLY INSTALLATION

The head assembly of the Vuelift is designed to be used in situations where the top floor has limited clearance. Installation of the unit where the top floor has a clearance of only 96" requires the Short Cab configuration which will be outlined in subsequent sections. The same head assembly is used in both low-clearance situations and situations where top floor clearance is not an issue.

The head assembly is shown below.

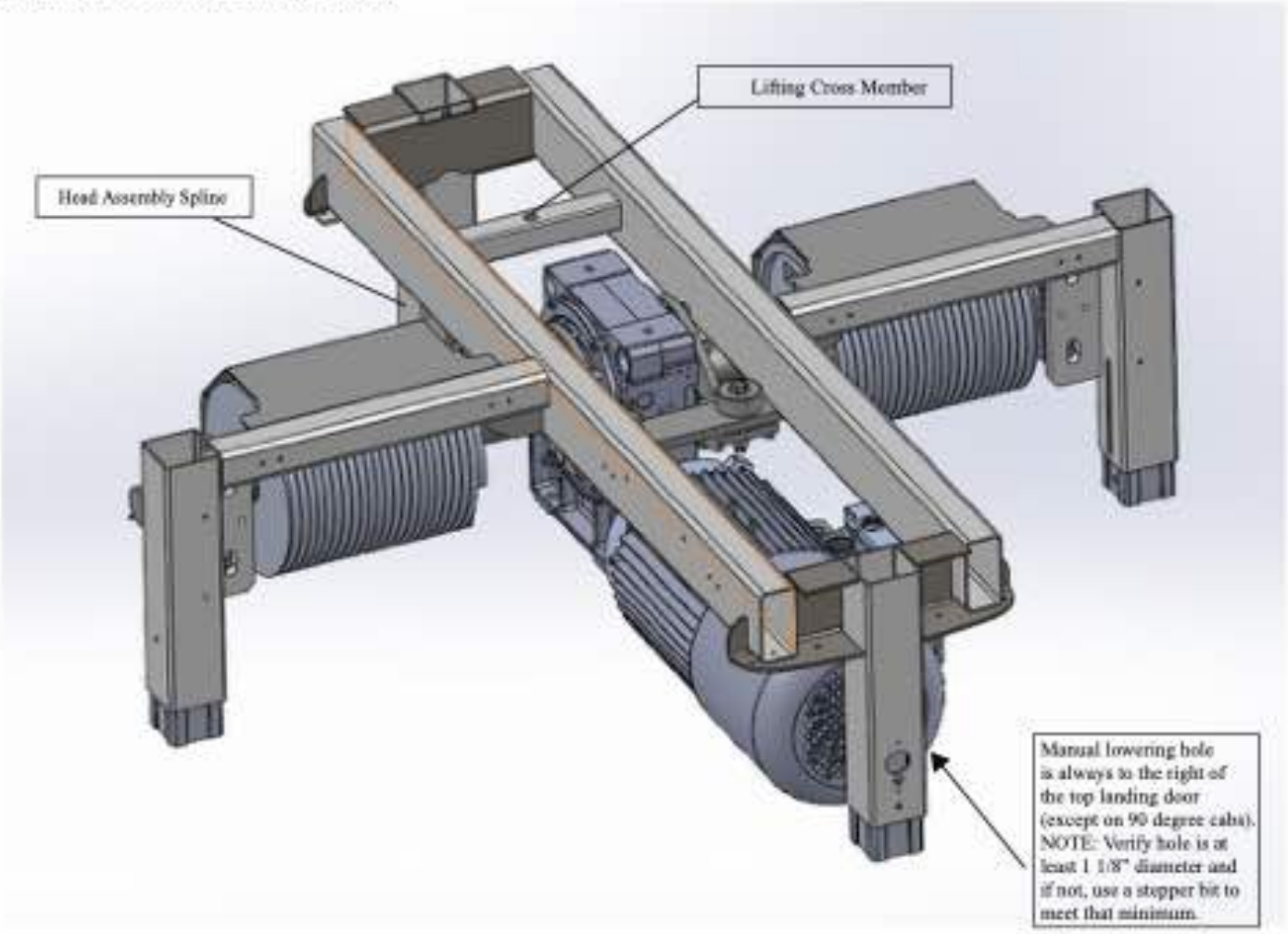

Figure 45: Head assembly

Step 25
Lift and secure head assembly to hoistway rails

Hoist the head assembly to the top of the hoistway using a method that is appropriate for your site conditions. Depending on your site, you may need scaffolding, or a temporary platform or lifting point.

IMPORTANT: Be sure to follow all Safety Precautions when lifting the head assembly

NOTE: When securing the head assembly to the hoistway rails, orientation of the head assembly relative to the cab floor is **extremely important**. A top view of the head assembly is shown below. Be sure to align the cab lifting cross member in the head assembly **directly above** the cab lifting point on the cab floor (see the drawings in STEP 7 earlier in this manual to identify the cab lifting point on the cab floor weldment). Attach the eye bolt to the cab lifting cross member (shown below).

Refer to the next page for instructions on securing the head assembly in place.

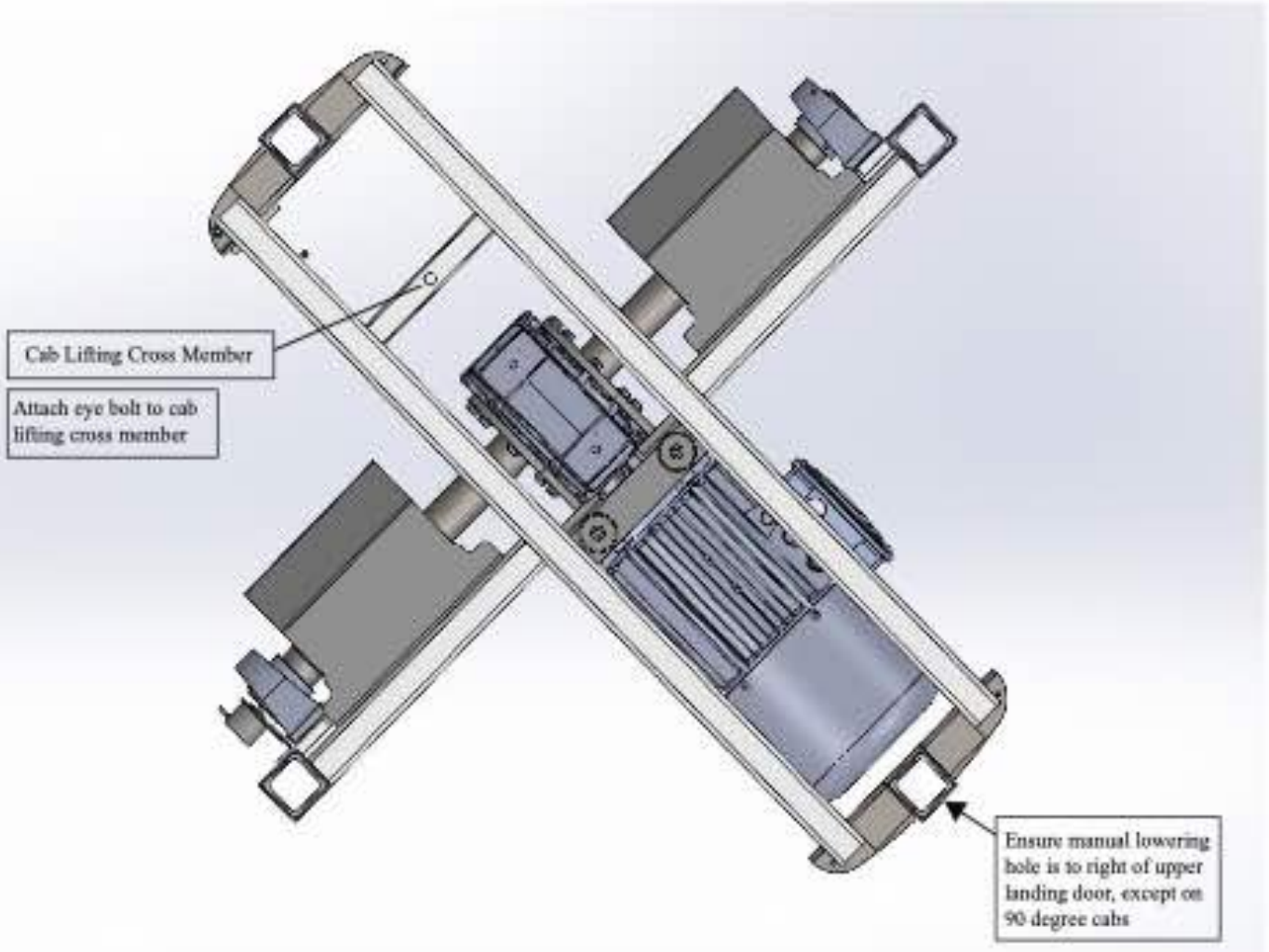

Figure 46: Head assembly top view

The head assembly is shipped with the head rail splines attached and secured in place within the head assembly. To install and secure the head assembly follow one of the below mentioned options:

Option 1: Using optional hoist tool (alternate option)

NOTICE

This procedure remains same for different types of Vuelift, just the shape and size of the plywood will change.



IMPORTANT

If the unit has two stops or if the distance between the top landing and the top of the car ceiling in the lower landing is less than 112 inches (284.5cm), **DO NOT** install the car ceiling before installing the motor header. Otherwise, it will interfere with the lifting post of the header hoist during installation.

1 Follow the standard procedure to install the rings, but do not secure the top ring to the rails. Instead, lift the top ring at least 70 inches above the top landing ring and put clamps on the rails just below the ring to prevent the ring from falling.

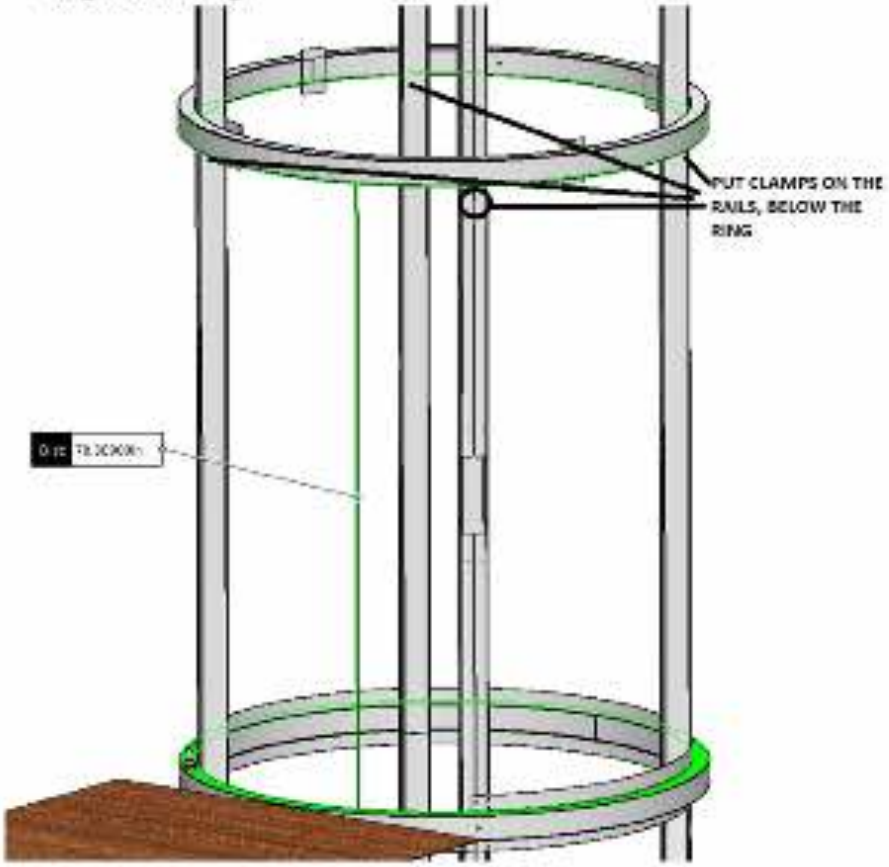

Figure 47:



Figure 48:

2 Insert the platform inside the hoistway and place it on top of the landing ring. Note that there are two extra layers of wood on one side of the platform, these layers **MUST** be on the hoistway side (Octagonal shown below).



Figure 49:

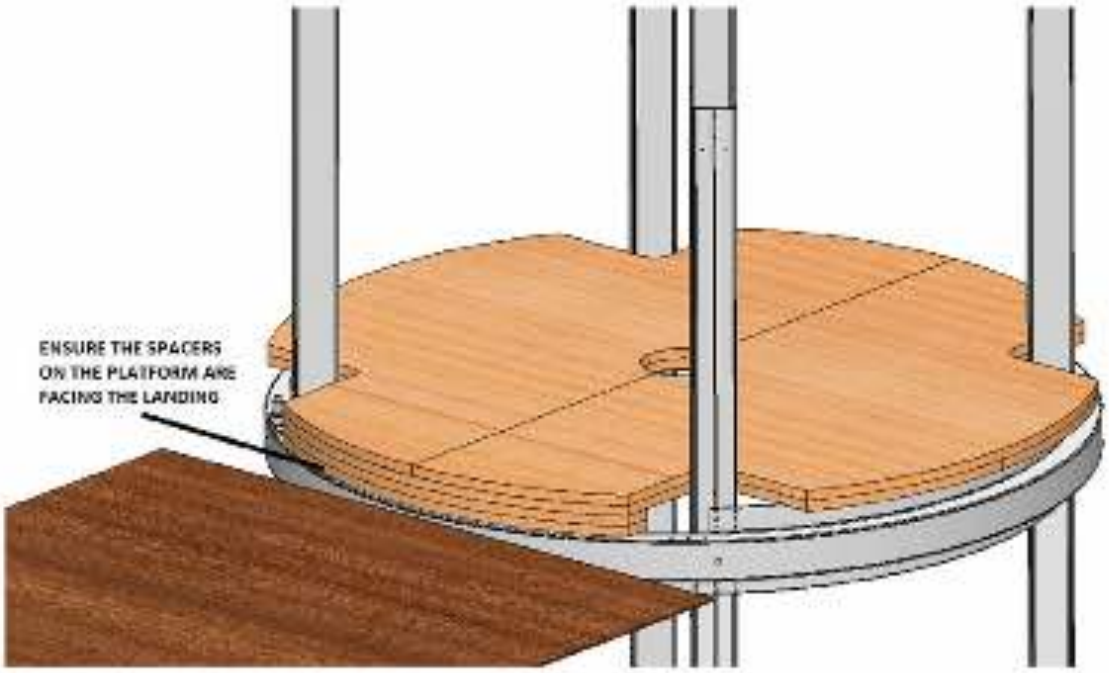

Figure 50

3 Remove the clamps to lower the top ring, and locate it on top of the platform.



Figure 51:

4 Insert the crank system through the hole and bolt it in place.

> **NOTICE**
> Ensure that there is padding or a cover under the crank legs if the floor is finished.

a. Place the supplied 4x4 piece of wood with 4 holes in it, under the legs, on the tube side of the crank system. The bolts will go through the platform in the pre-drilled holes with nuts attached on the bottom.

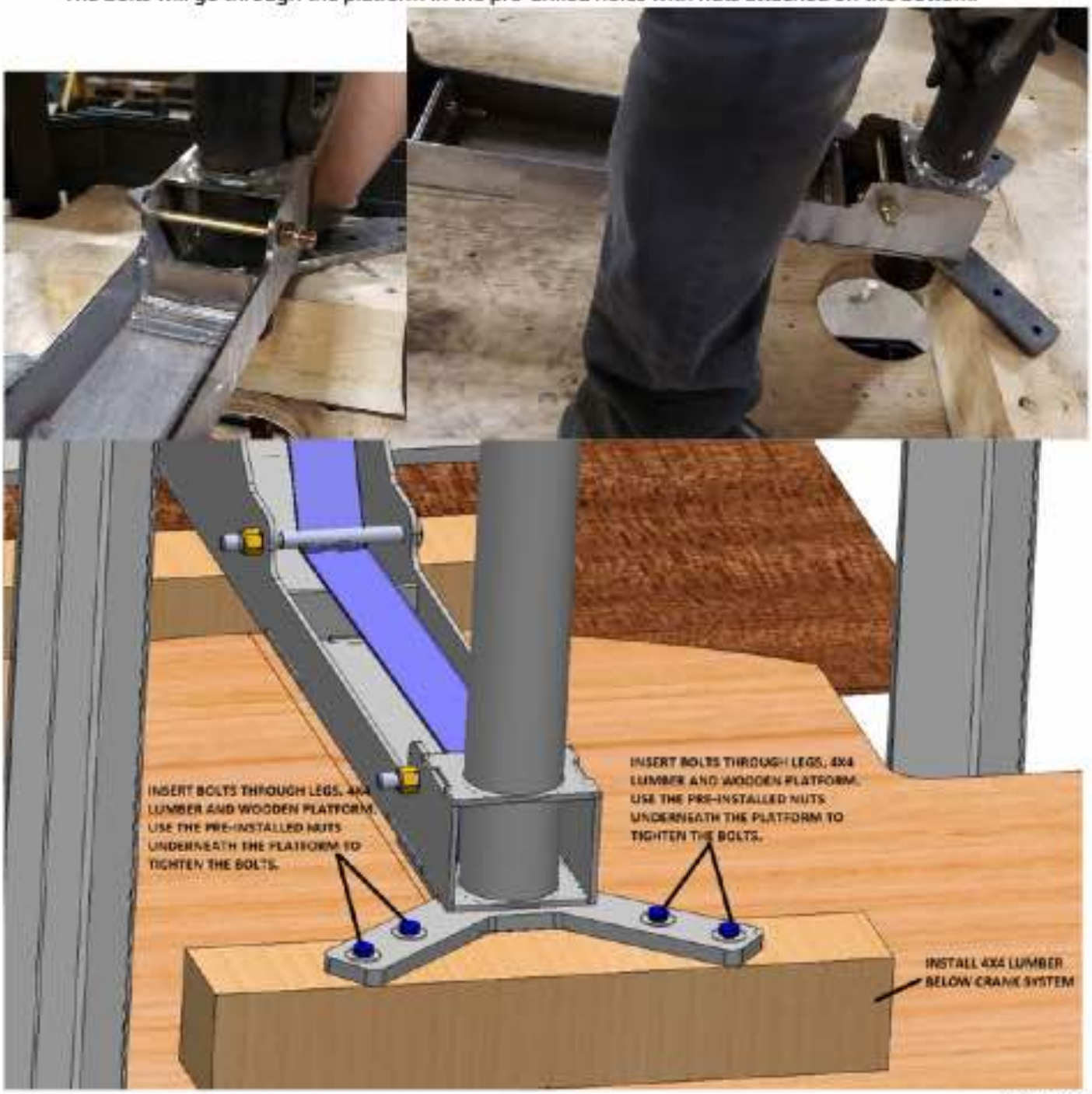

Figure 52:

b. Use the supplied piece of 4x4 wood on the landing side and level the crank system using the bolts installed on this side.

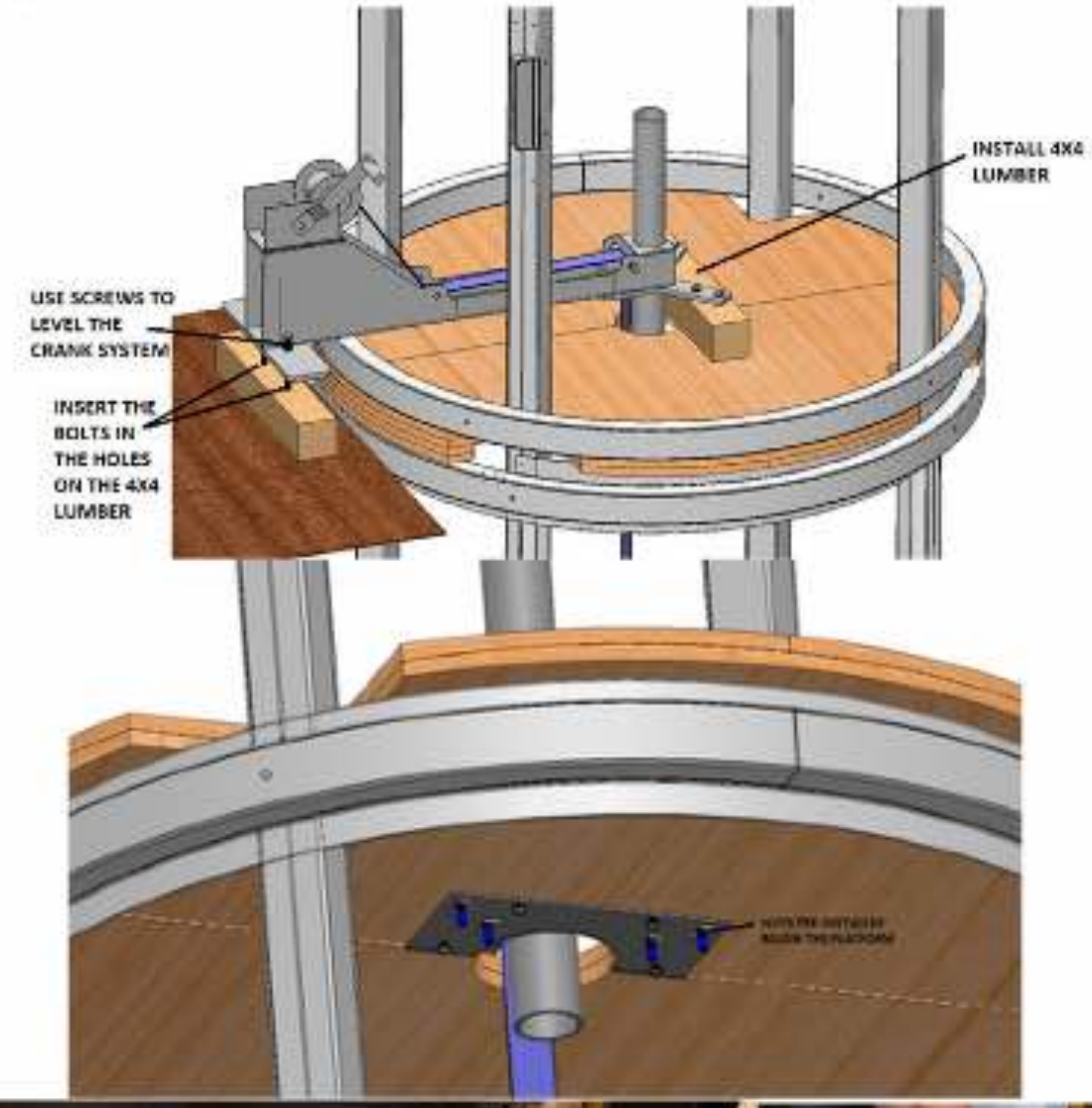



Figure 53:

5 Lower the belt down approximately 6.5 ft (2 meters) so that it can be reached from the level below. The crank is bi-directional, meaning that it operates in both directions. If you find the belt is pulling in, rotate the crank in other direction.





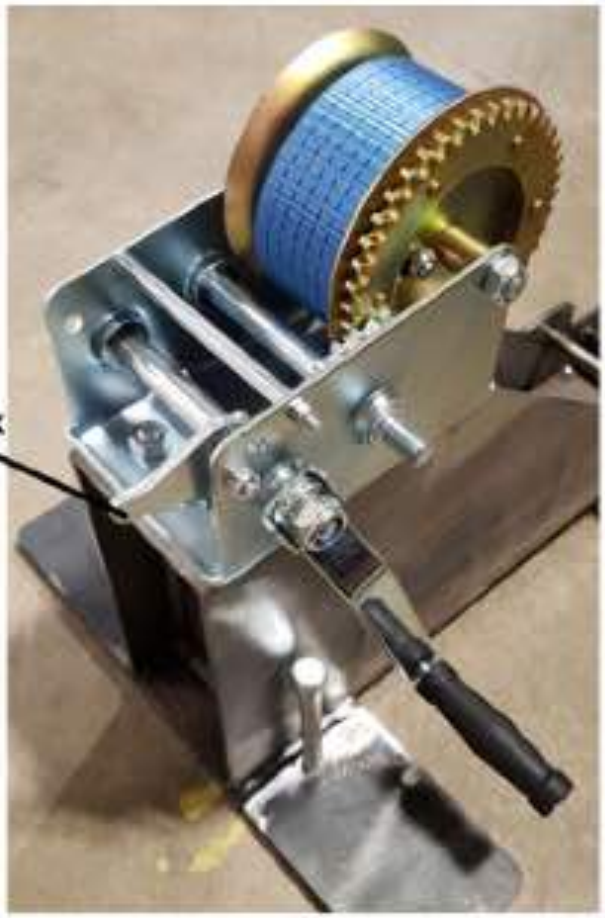

Figure 54:

6 Insert he main lifting post into the crank system from underneath and attach the lifting belt.



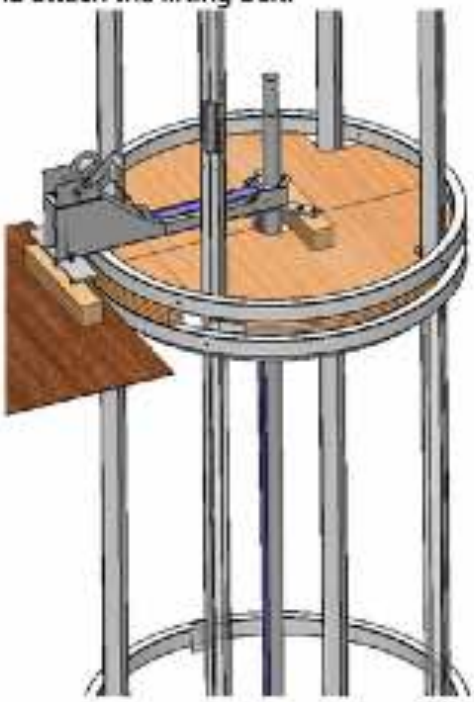

Figure 55



Figure 56

7 Remove the slack by tensioning the belt.
8 If needed for the ceiling height, add the post extension using the supplied splice bar.
9 The inserted post must be extended 100 mm above the crank system in order to install yoke as shown in the following figure.

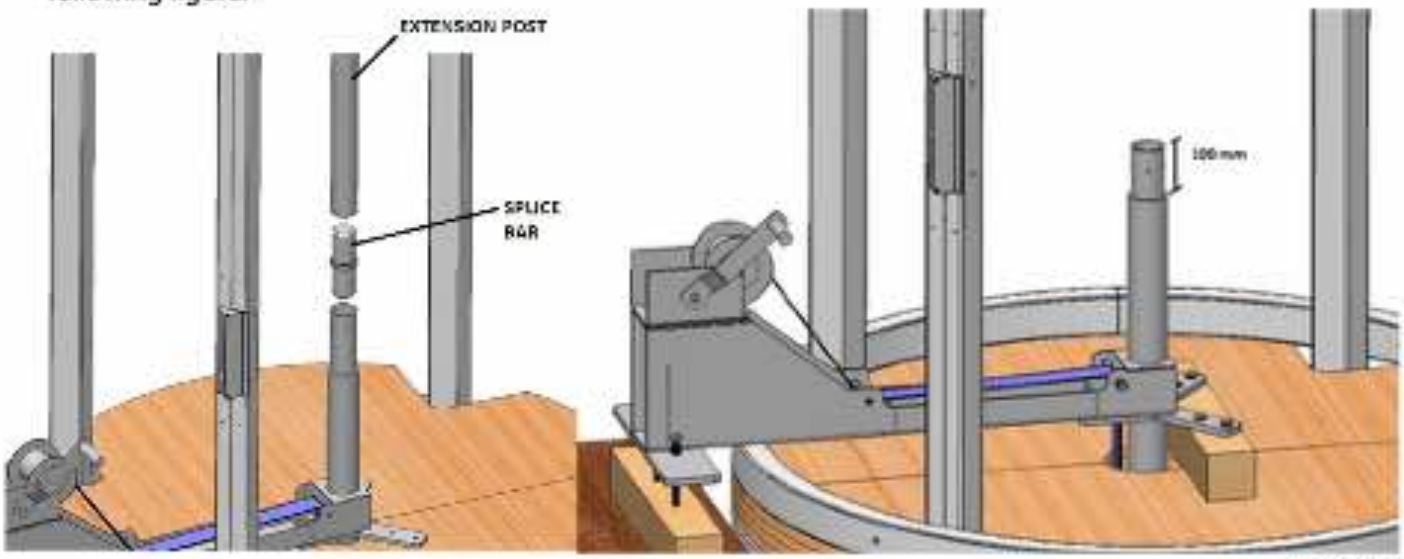

Figure 57:

10 Attach yoke to the header ring with system upside down while the bolts and clamp are in place. **Ensure splice bars are installed in header and retracted.**

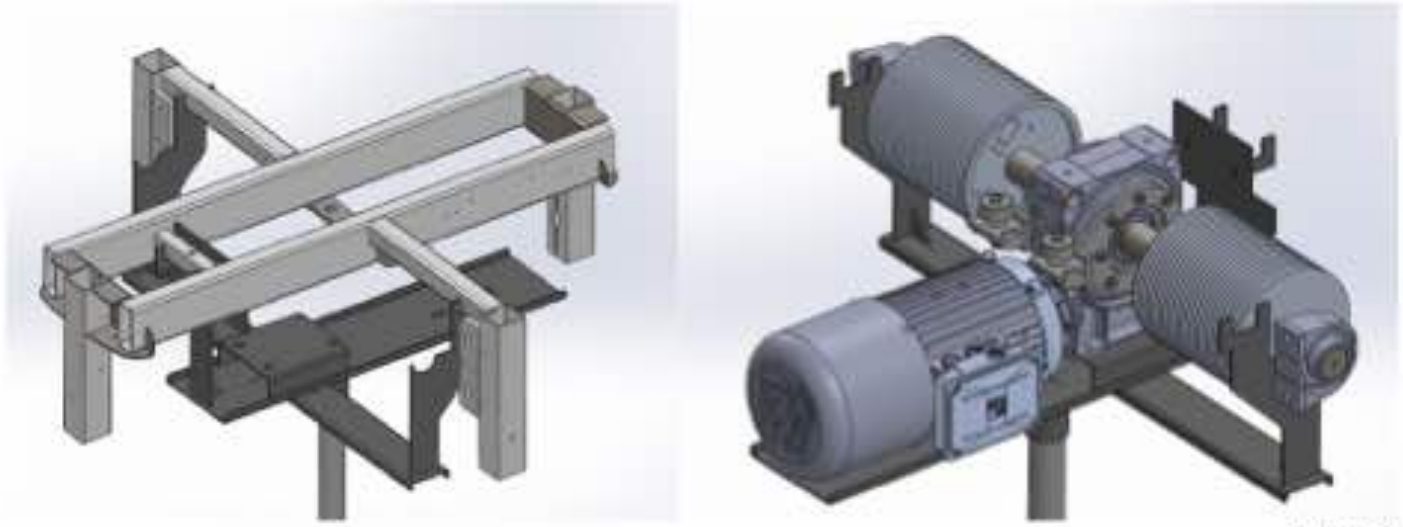

Figure 58:

11 Flip the header assembly and lift it with the yoke. Insert the assembly onto the yoke. The header should be located offset to guide-rails but close to its final position.

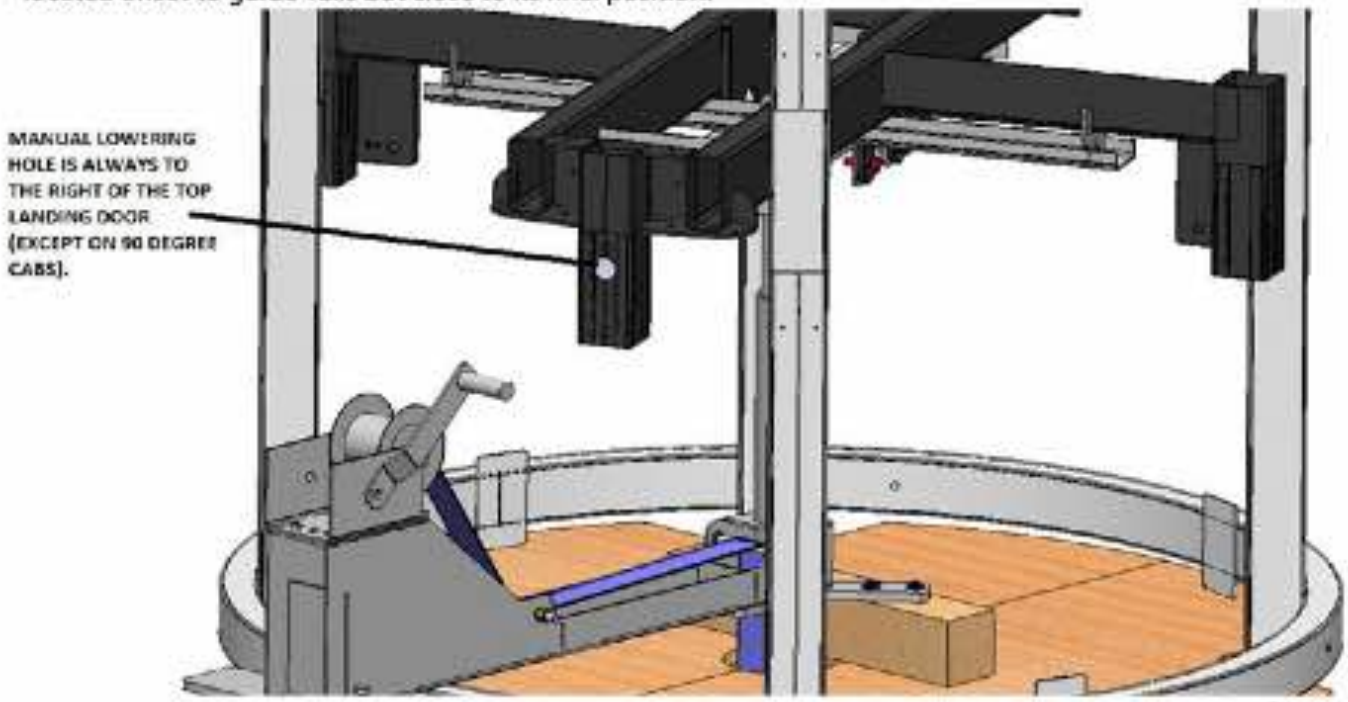

Figure 59:

12 With header offset to guide-rails, crank header ring lift until it is higher than the guide-rails

> **NOTICE**
> Always stabilize the header ring when cranking up.

13 Once the header assembly has been cranked above the rails,, rotate it so that all of the rails line up with the header assembly. **Ensure the final position of the motor header is with the manual lowering hole to the right of the top landing door.**

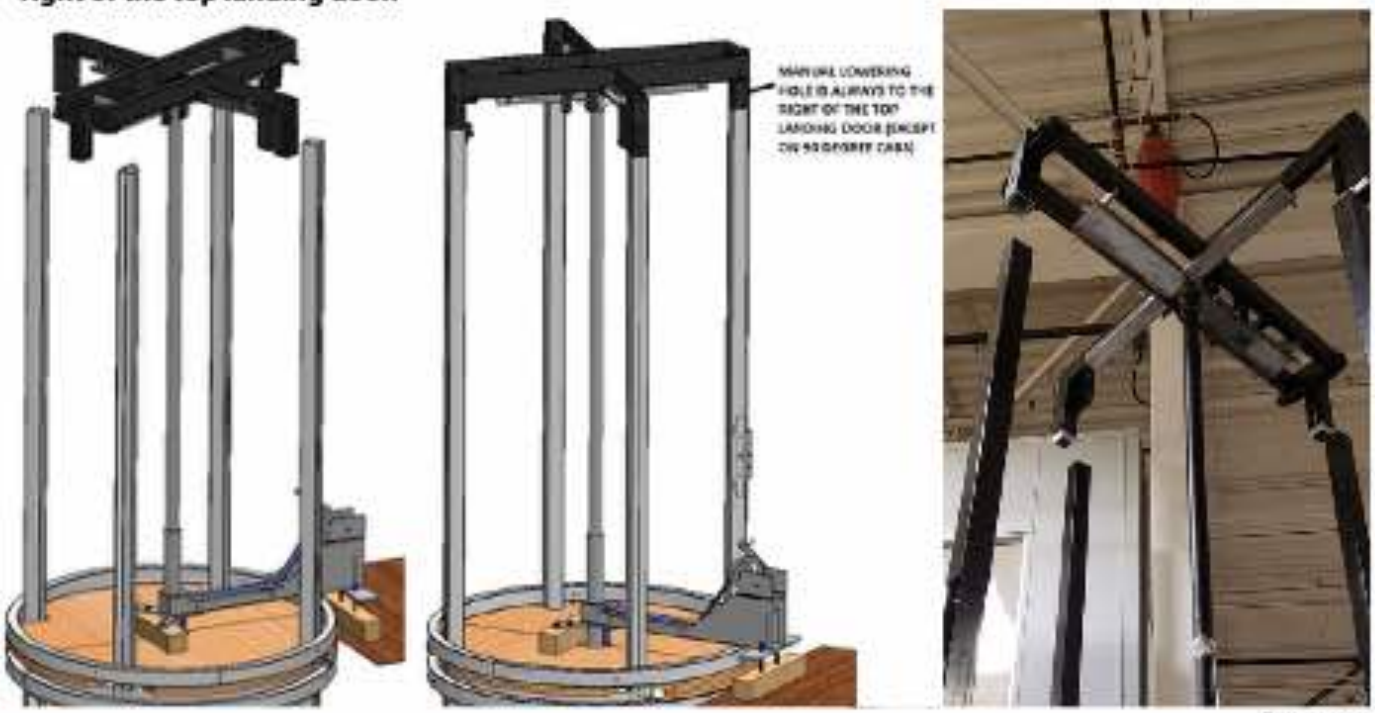

Figure 60:

14 Lower the header rail splines down into the main guide-rails and fasten them in place.

15 Disconnect the header ring from the yoke by installing and tightening the bolts on the yoke to the tube, followed by removing the bolts that secure the yoke and the header.

16 Lower the lifting post and yoke by cranking the hand crank down.

17 Remove the yoke from the crank system.

18 Remove the lifting post from the crank assembly. Remove the crank assembly from the platform, and continue with the installation.

Option 2

1 Slide the head assembly on top of the **top floor** hoistway rails as shown below.

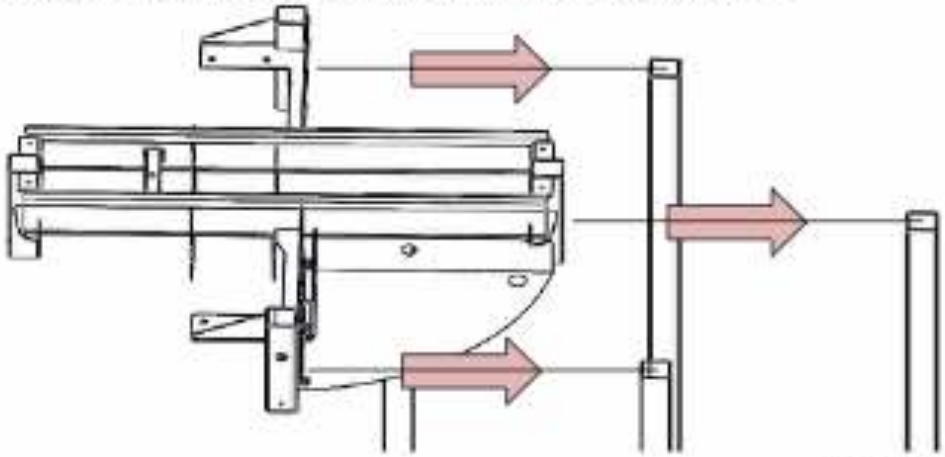

Figure 61: Install head assembly

2 Loosen the (4) 3/8" hex bolts securing the head rail splines to the head assembly as shown below (use a 9/16" wrench or socket). These bolts **MUST NOT BE REMOVED COMPLETELY**; only loosen until approximately 1/16" to 1/4" of threads are exposed.

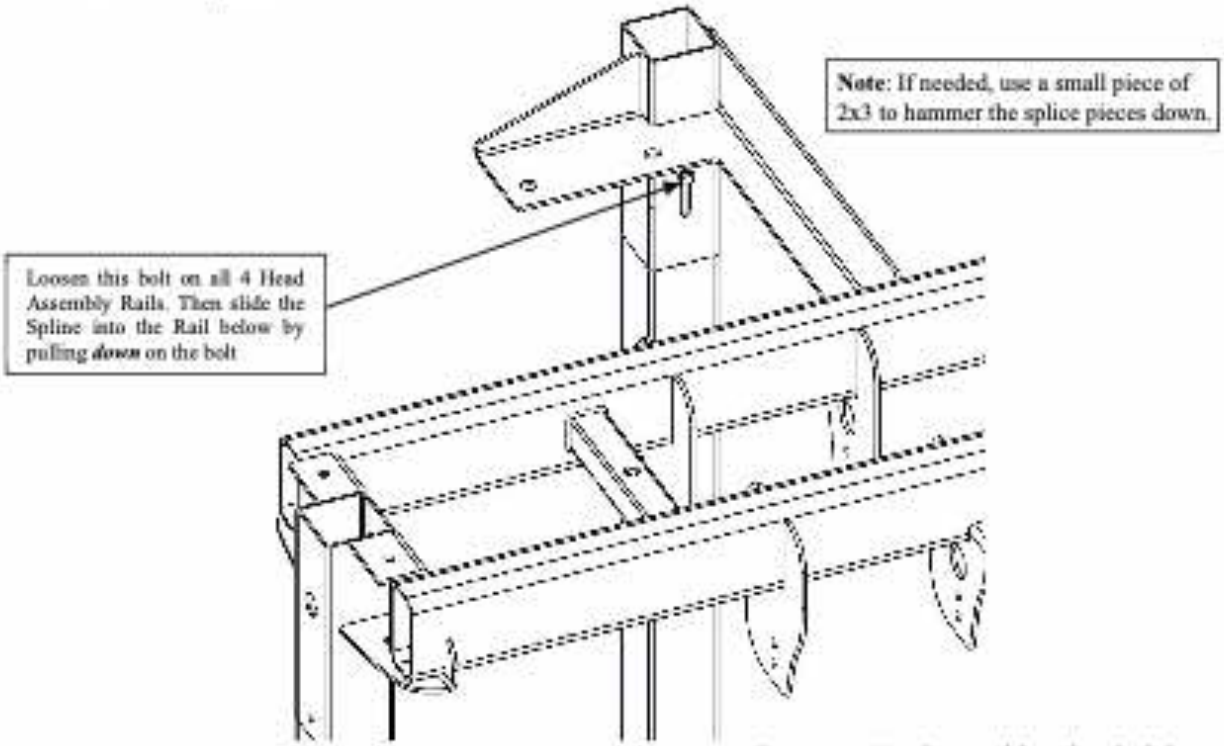

Figure 62: Head assembly spline bolt locations

3 Slide the head rail splines down into the hoistway rails by pulling down on the hex bolts as shown below.

4 Once the head rail splines are in place (when the hex bolt is all the way at the bottom of the slot), tighten all 4 bolts to secure the head rail splines. **ONLY TIGHTEN THE BOLTS 1/4 TURN PAST FINGER TIGHT.**

NOTICE

If the head assembly is installed in a LOW-CLEARANCE situation, go to the next step, **Lift and secure the header rings**. If not, skip the next step and go to STEP 33 - Align and plumb rails (head assembly).

Step 26
Align and plumb rails (head assembly)

The rails on every floor plumb independently of the rails on the previous floor. This allows the hoistway to be adjustable given the conditions on each floor, ensuring a plumb hoistway from top to bottom.

All hoistway rails have now been installed, and the balcony ring (if applicable) and header ring has been loosely secured. It's now time to align and secure the top floor rails, as follows:

1 To align and plumb the rails, snug the bolts that secure the rails (or head assembly) to the header ring on the **current floor**.

2 Place the magnetic level on one rail of the **current floor** and move the rail as necessary until plumb. Acceptable tolerances for all rails are ±0.1° or ±1/8" every 7 feet. Repeat this process for all four rails.

> ⚠ CAUTION
>
> Maintaining these tolerances requires patience and a high quality level or plumb. Setting rails inaccurately **will** cause the cab to bind inside the hoistway. The Vuelift utilizes 24 shoes for the smoothest possible ride, this requires the rails to be plumb.

3 Tighten the bolts securing the header ring on the **current floor** to the rails. **TIGHTEN COMPLETELY, BUT DO NOT STRIP THE THREADS.**

4 Tighten the bolts securing the mid-floor ring or balcony ring (if applicable) on the **current floor** to the rails. **TIGHTEN COMPLETELY, BUT DO NOT STRIP THE THREADS.**

CAB INSTALLATION

Step 27
Cab installation information

The Vuelift comes standard with a field adjustable cab with two possible configurations.

- The first configuration does not require modification and is for an interior cab height of 7'-0" (Standard Cab).
- The second configuration requires modification (outlined in the subsequent sections) and is for low-clearance top floor configurations which changes the interior cab height to 6'-4" (Short Cab).

Cab rail installation for both types of cabs is simple, however there are a few items which must be observed. The Vuelift comes with two different types of cab rails as shown below. One is for safety legs and the other is for non-safety legs. For standard cabs, the cab rails are shipped from the factory ready to install.

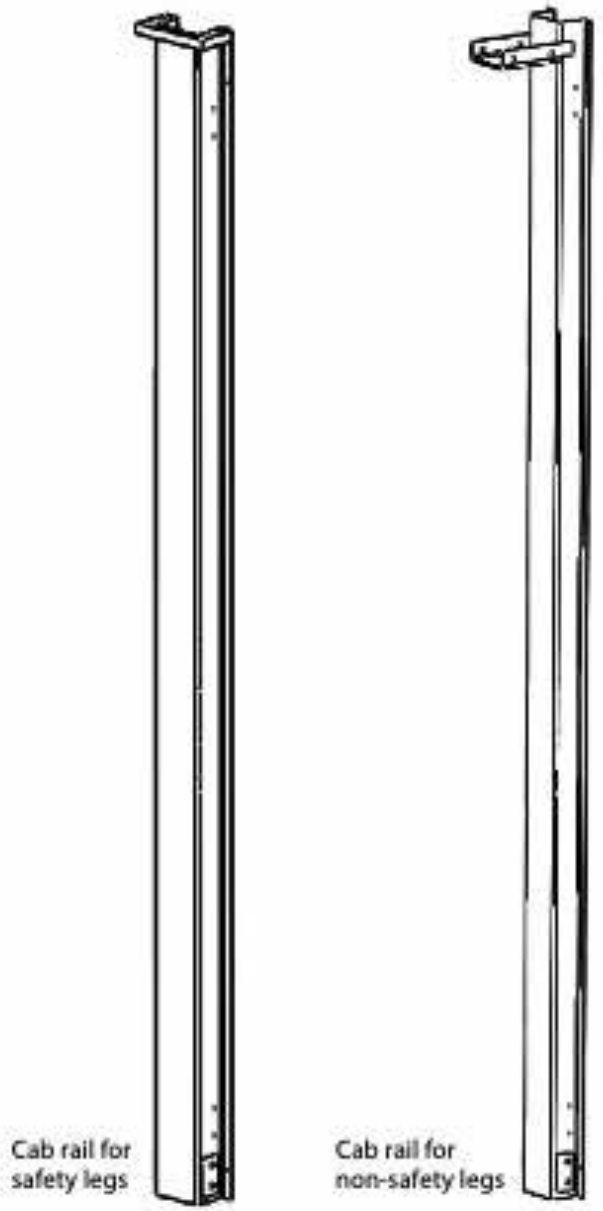

Figure 63: Cab rail types

Step 28
Install 3 of 4 cab rails

> **NOTICE**
>
> In this step, you will install 3 of the 4 cab rails ONLY (2 standard rails and 1 safety rail). After the cab ceiling weldment is in place, you can install the 4th rail (safety rail). This allows for easier installation of the cab ceiling weldment if the 4th rail is not installed.
>
> Image below is shown for illustration purposes only The cab rails are NOT installed at this point..

1 Place two 2x4s underneath the cab floor weldment to raise it up.

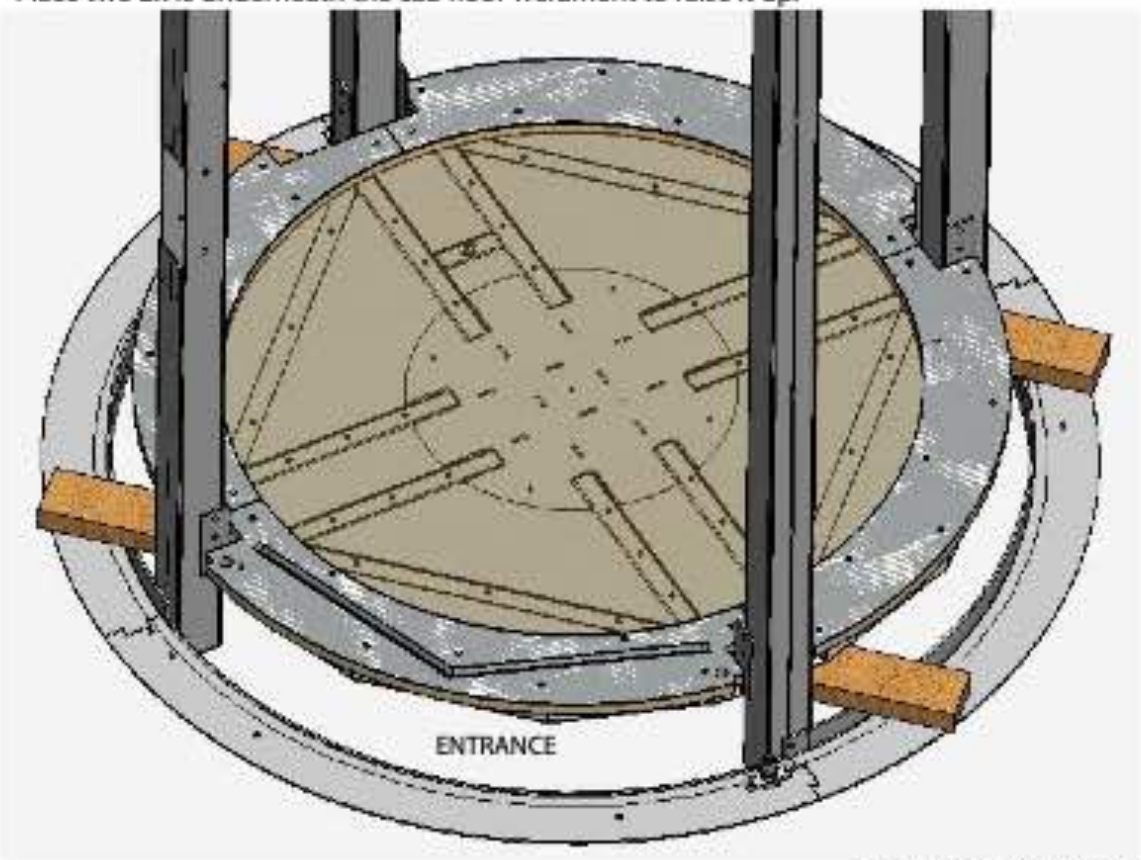

Figure 64: Cab floor weldment sitting on 2x4s

2 Attach the 3 cab rails (2 standard rails and 1 safety rail) to the cab floor. To do this, take one cab rail and insert it around the L-brackets sticking up from the cab floor weldment as shown below.
   - **NOTE**: You will install the 4th rail (safety rail) **AFTER** the cab ceiling weldment is in place.
3 Note that the cab rails have Velcro along the sides, with the following exceptions:
   - There is no Velcro on the COP side of the rail.
   - There is no Velcro on the door opening side of the rails.
   - It is important to install the rails in the correct orientation so the Velcro is located appropriately for the cab panels which will be attached in a later step.

> **CAUTION**
>
> Cab rails of matching types must be placed **across** from each other on the cab floor weldment. This means that the non-safety rail and the non-safety rail attached to the COP leg must be opposite each other. The two safety rail must be opposite each other as well. Note that the COP leg (which will be installed in a later step) must be around the rail closest to the cab lifting point as shown in the drawings in STEP 7 earlier in this manual.

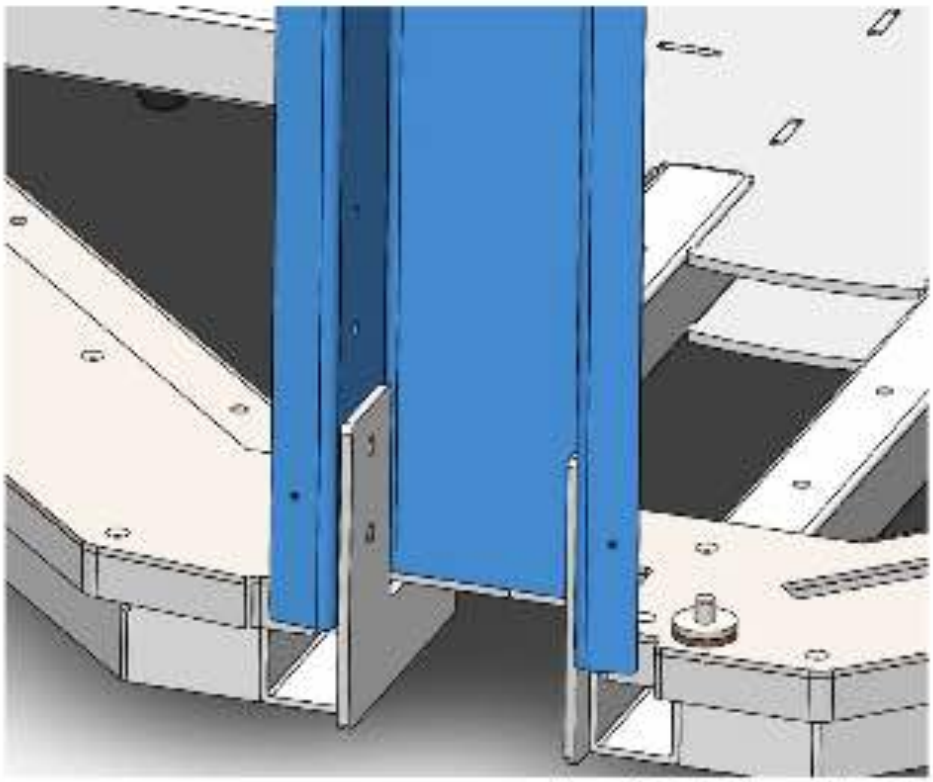

Figure 65: Cab rail around L brackets on cab floor weldment

4 Pivot the cab rail until it is flush against the hoistway rail, then insert (4) 3/8"-16 x 1/2" button head screws (from Car Frame Fastener Bag in kit PK-0016) into the base of the cab rail as shown below and tighten completely. Note that a safety bit will be provided (in Car Frame Fastener Bag in kit PK-0016).

5 Repeat this process for the other cab rails.

- **NOTE**: You will install the 4th rail (safety rail) **AFTER** the cab ceiling weldment is in place.

6 If not already done, insert the supplied eye bolt into the cab lifting point on the cab floor weldment (as shown in the drawings in STEP 7 earlier in this manual). Orient the eye bolt so the eye of the bolt is **UP**.

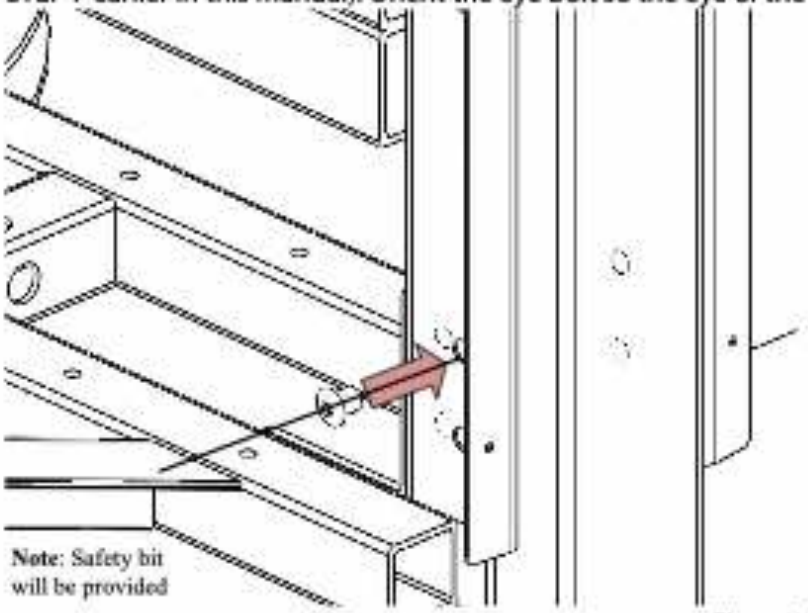

Figure 66: Cab rail to cab floor weldment

Step 29
Install cab ceiling weldment

For this step you will need the following tools, fasteners and components:

Item	Qty
Cab ceiling weldment	
9/16" open ended wrench or crescent wrench	
9/16" socket wrench	
3/8" - 16 x 6" hex bolts - pre-installed in ceiling	4
3/8"-16 x 3/4 socket cap screw	8
3/8"-16 hex nuts (in Car Frame Fastener bag of kit PK-0016)	8
3/8" flat washers (in Car Frame Fastener bag of kit PK-0016)	16
Non-marring C-clamps or non-marring quick-grip clamps	2

1 The cab ceiling comes completely pre-assembled from the factory as shown below.

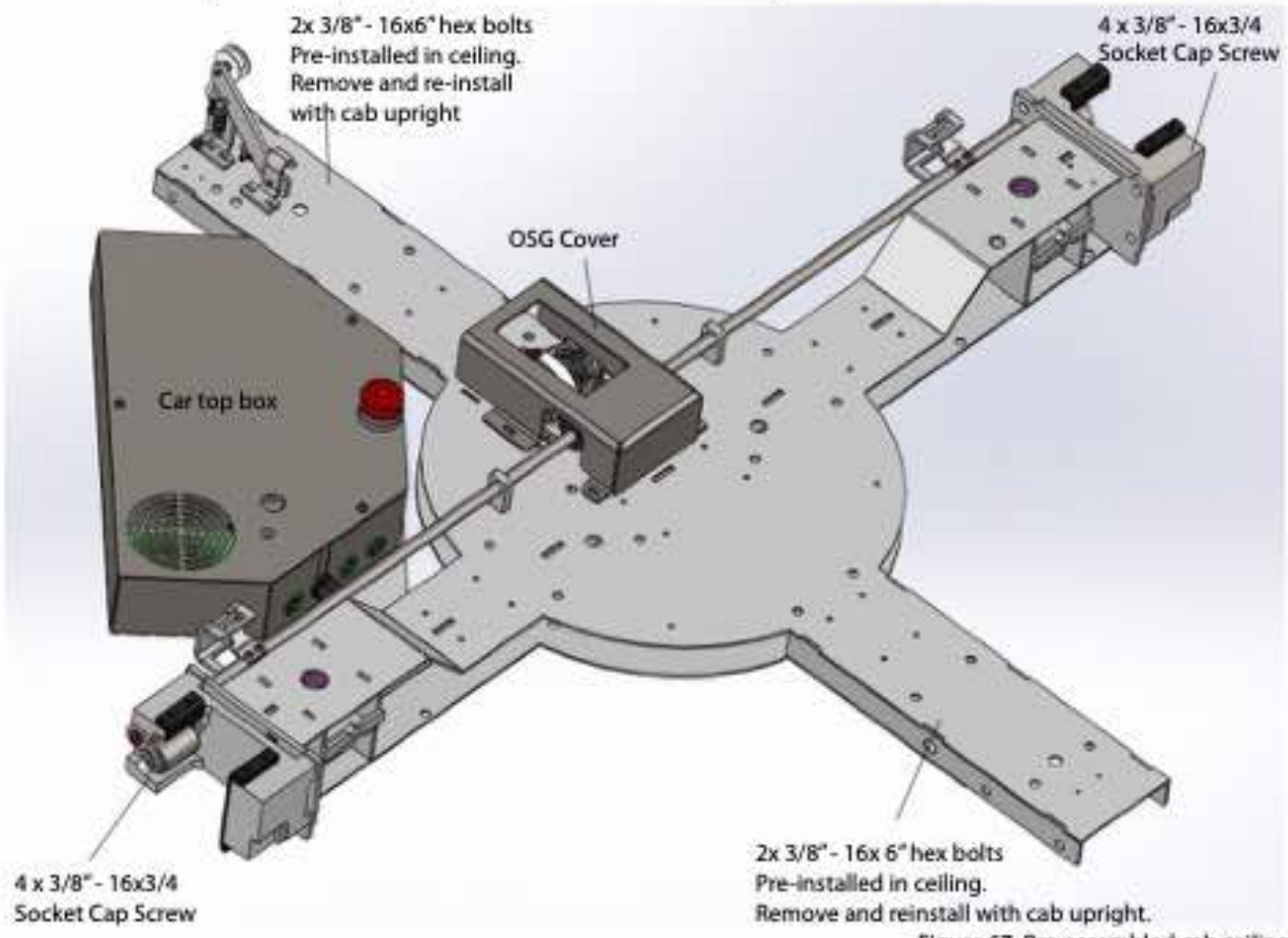

Figure 67: Pre-assembled cab ceiling

2 In order to install the cab, you need to remove the following items from the pre-assembled cab ceiling.
   a. Remove the car top box.
   b. Remove the OSG cover.
   c. Remove the door operator cover.

d. Remove the door operator (this makes the ceiling weldment lighter).
e. Disconnect the chains and remove the door hinge pins (at both sides).
f. Remove the bi-fold door monitoring switches (at both sides) to protect the switches.
g. Remove the ceiling plate (both sides).

3 Install the cab ceiling weldment (shown below).
• Note that the cab ceiling weldment must be oriented properly before installing it on the cab rails.

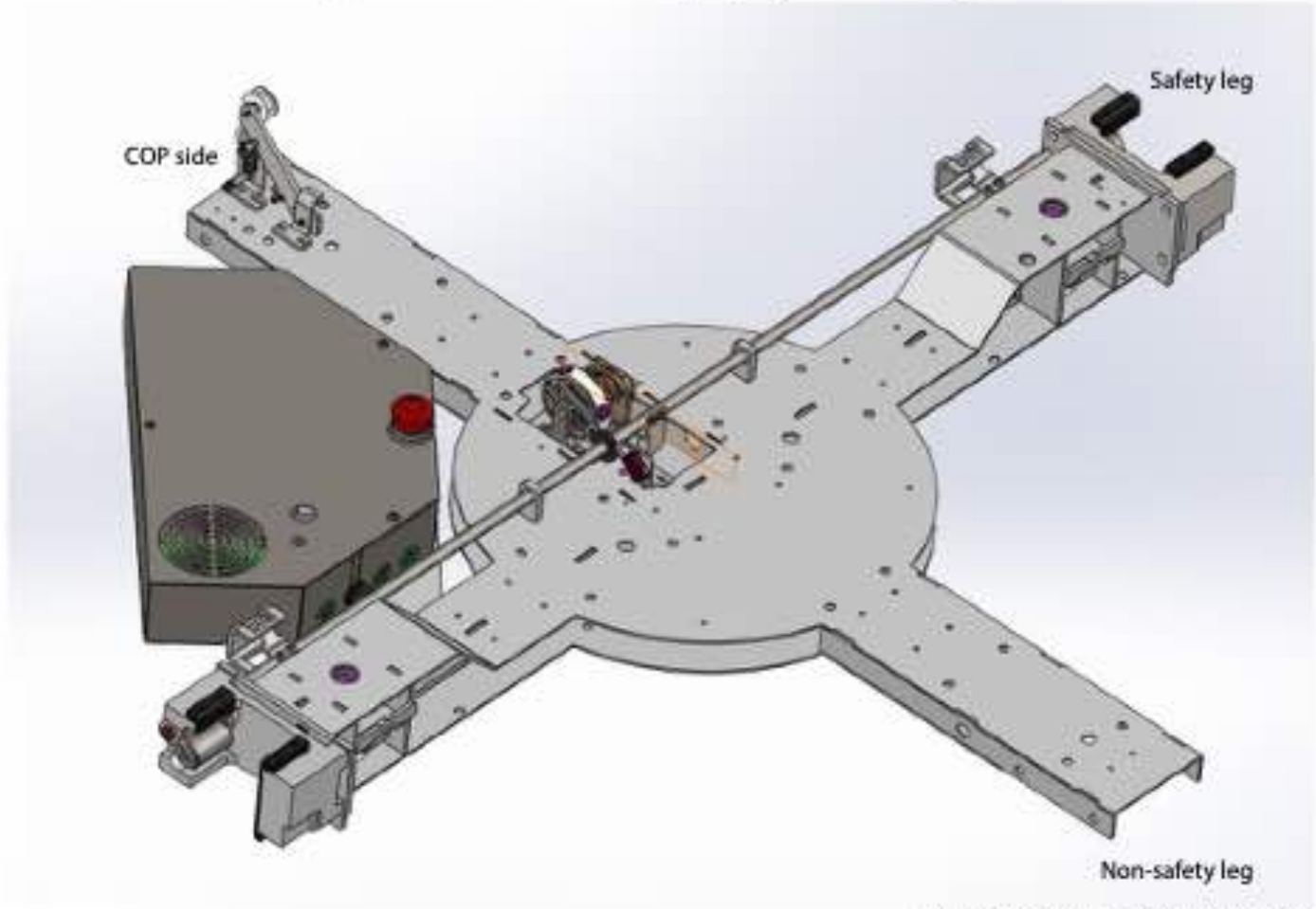

Figure 68: Install cab ceiling weldment

4 Lift the cab ceiling weldment up and rest it on the 2 non-safety (standard) car rails as shown below.

5 Then, rotate the cab ceiling weldment down until it lines up with the safety rail as shown below.

> **CAUTION**
> Be sure not to scratch the cab rails when installing the cab ceiling weldment!

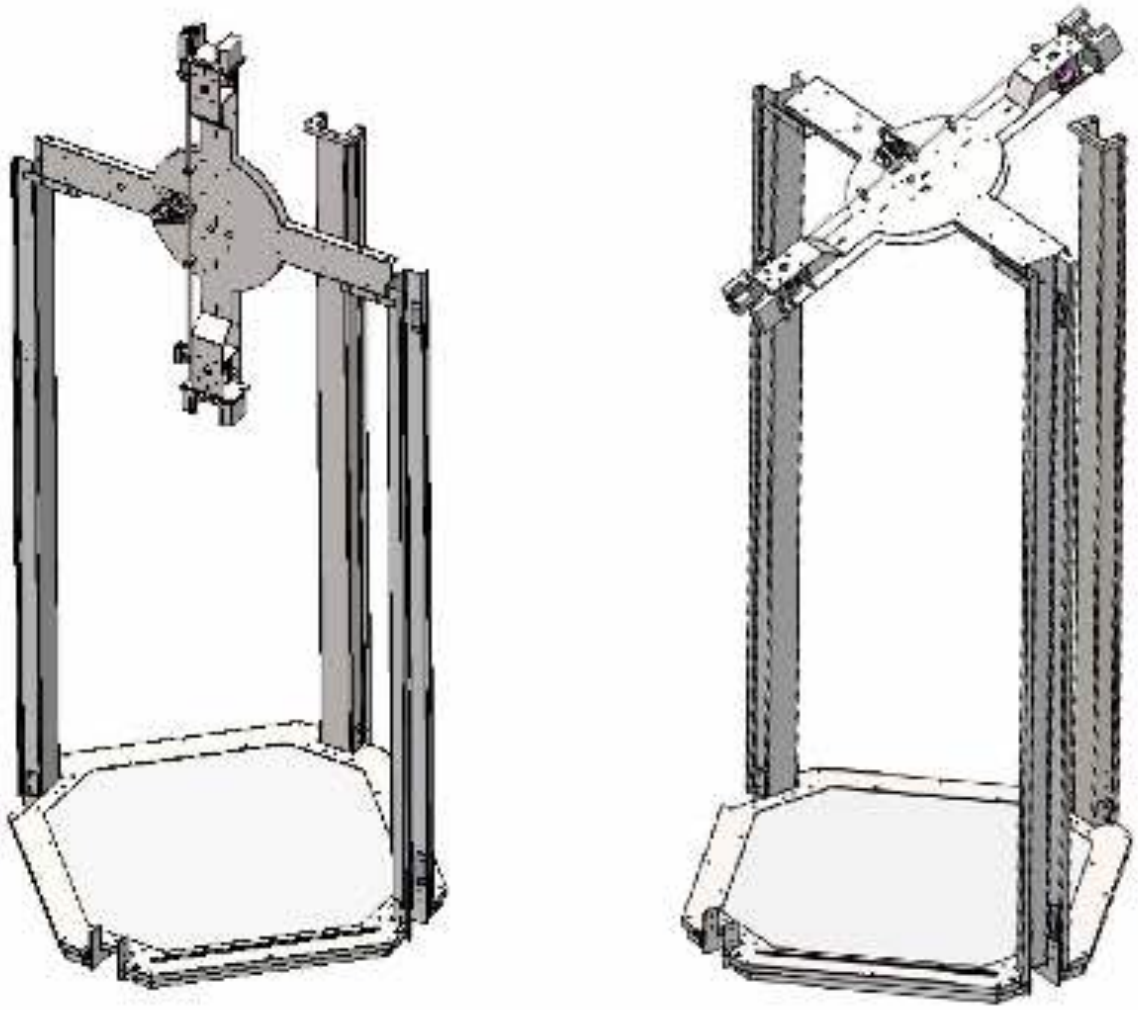

Figure 69: Installing cab ceiling weldment

6 Once the cab ceiling weldment is in place, temporarily secure it to the rails by installing one 3/8"-16 x 6" hex bolt and associated hardware into the 2 non-safety (standard) rails as shown below.



Figure 70: Temporarily secure cab ceiling weldment to standard rails

Step 30
Install 4th car rail

1 Install the 4th car rail in the same manner as the other 3 rails.

2 Secure the cab ceiling weldment to all 4 rails.

a. Use two 3/8"-16 x 6" hex bolts and associated hardware to attach the non-safety (standard) legs to the non-safety rails as shown below. **TIGHTEN COMPLETELY**.

b. Use four 3/8" x 3/4" socket head screws to attach the safety legs to the safety rails (from underneath as shown below). **TIGHTEN COMPLETELY**.

> **CAUTION**
> Be sure not to scratch the cab rails when installing the cab ceiling weldment!

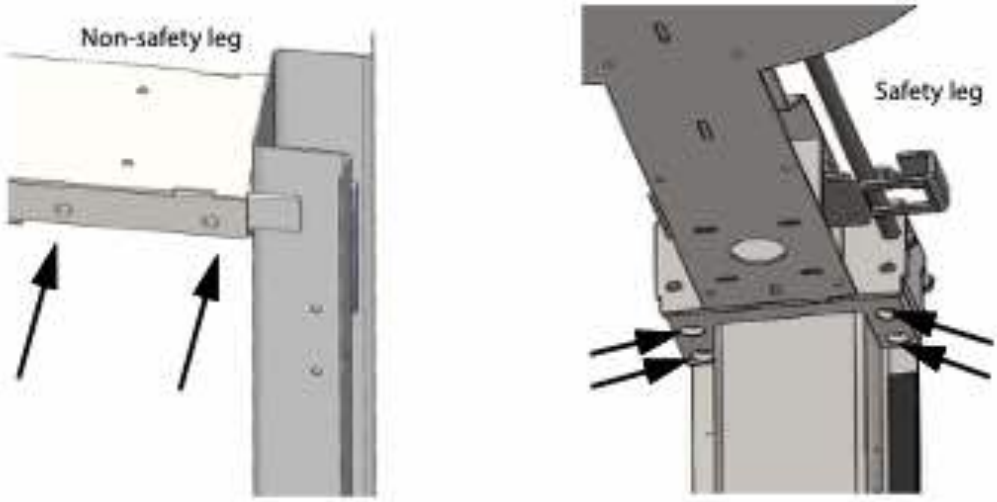

Figure 71: Installing cab ceiling weldment

3 When complete, the cab ceiling weldment will be similar to the illustration shown below.

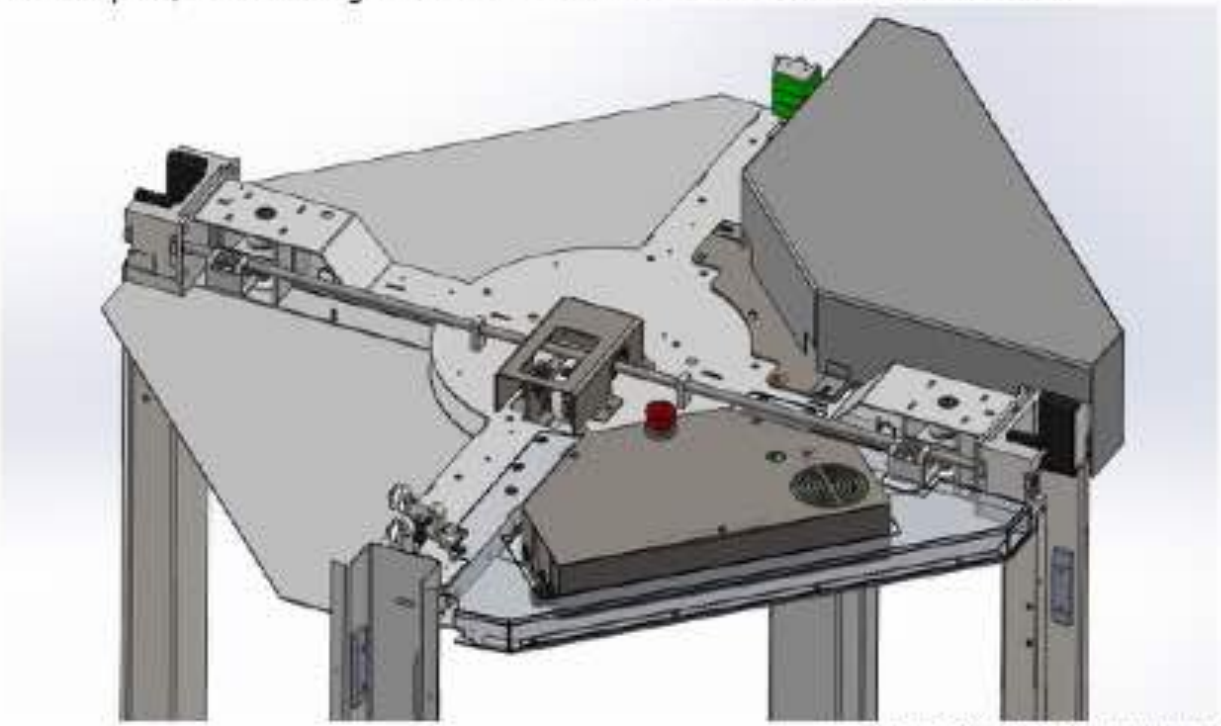

Figure 72: Cab ceiling weldment installed

DRIVE TRAIN INSTALLATION

Step 31
Install drive train

The Vuelift is designed so you can build the drive train at a comfortable position, and then lift it into place and secure it. To accomplish this, position the cab ceiling at a comfortable working height on the second floor (or third floor, if applicable).

1 Secure the chain block to the cab floor lifting point eye bolt, and also to the cab lifting point located in the head assembly.

2 Raise the cab assembly to a position where the cab ceiling weldment is located above a floor surface (this would be the second or third landing). If possible, select a landing with a thru-floor configuration as it provides the easiest access to components during assembly.

> **CAUTION**
>
> After the cab is located at a comfortable height, place a couple of 2x4s across the ring below the cab to protect against winch (or chain block) failure.

3 The following illustration shows the cab assembly positioned at an appropriate height on a thru-floor landing.

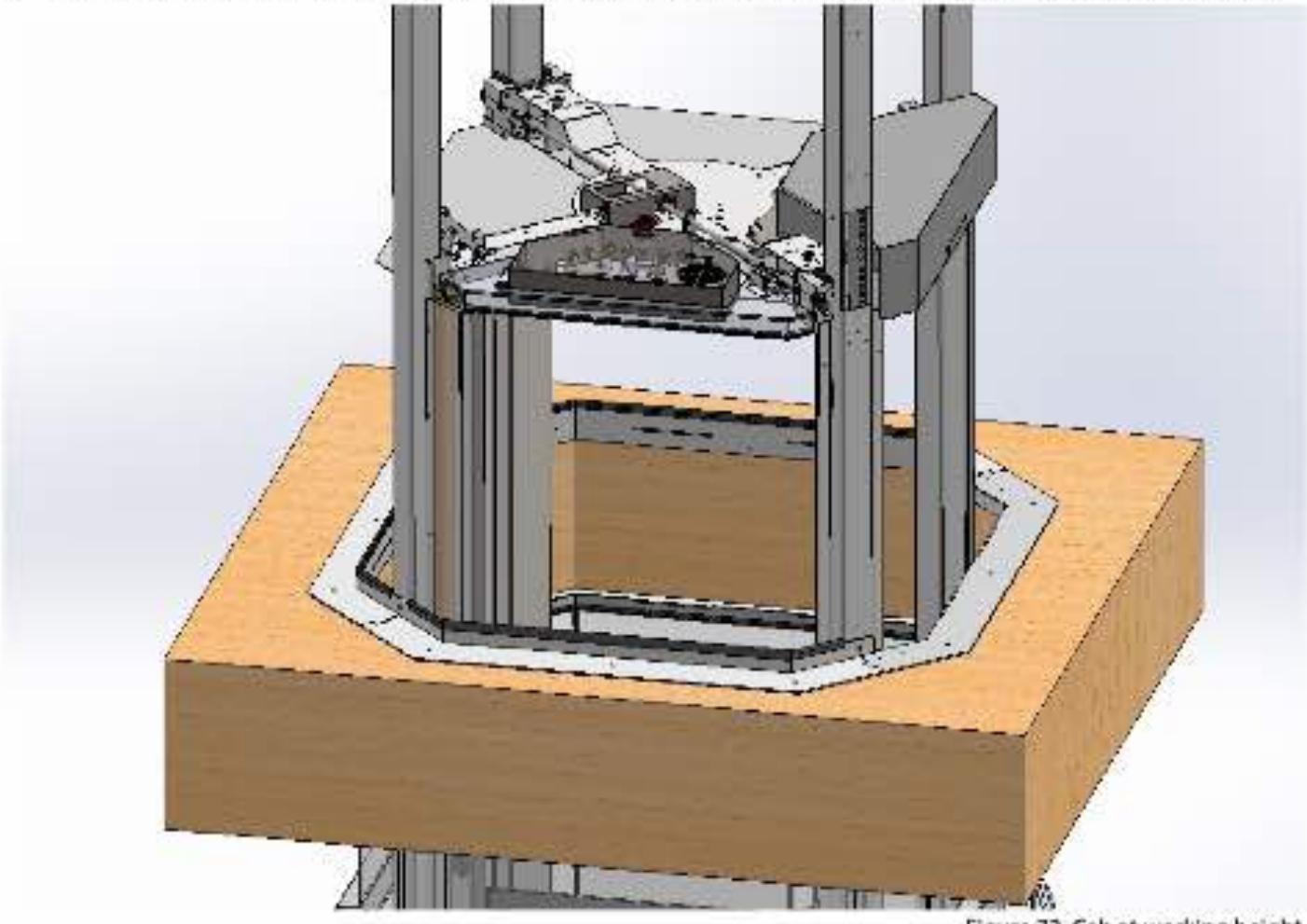

Figure 73: Cab at working height

4 Place several 2x4s on top of the cab ceiling weldment in the orientation shown below.
- **IMPORTANT**: The positioning of the 2x4s is **VERY IMPORTANT** to ensure there is no damage to any of the components on top of the cab ceiling weldment.

5 Set the motor/gearbox assembly on top of the 2x4s as shown below.

> **CAUTION**
> Be sure to hold the motor/gearbox assembly until the axle shaft is inserted in the next step so it does not fall from the cab ceiling weldment.

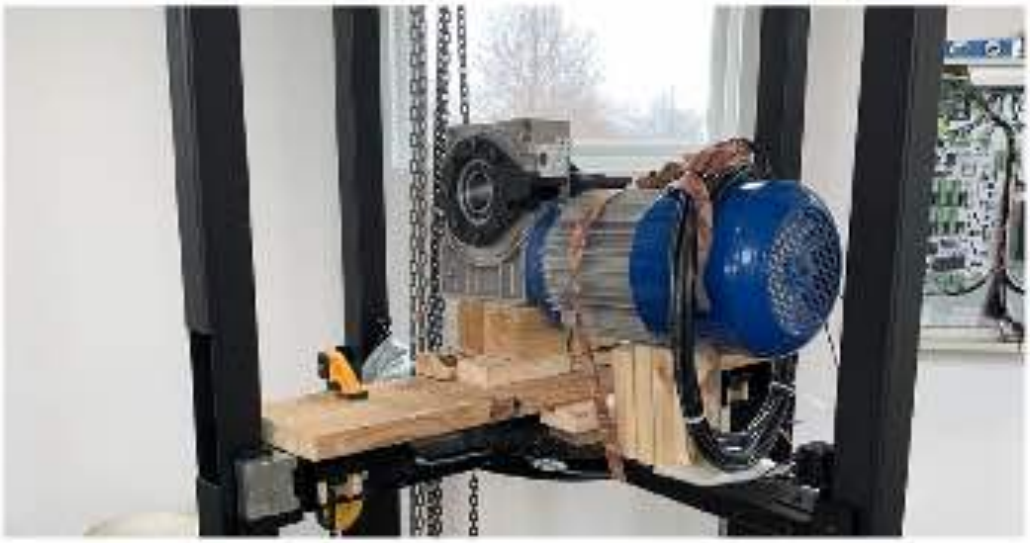

Figure 74:

Tornado Motor Head Frame Assembly

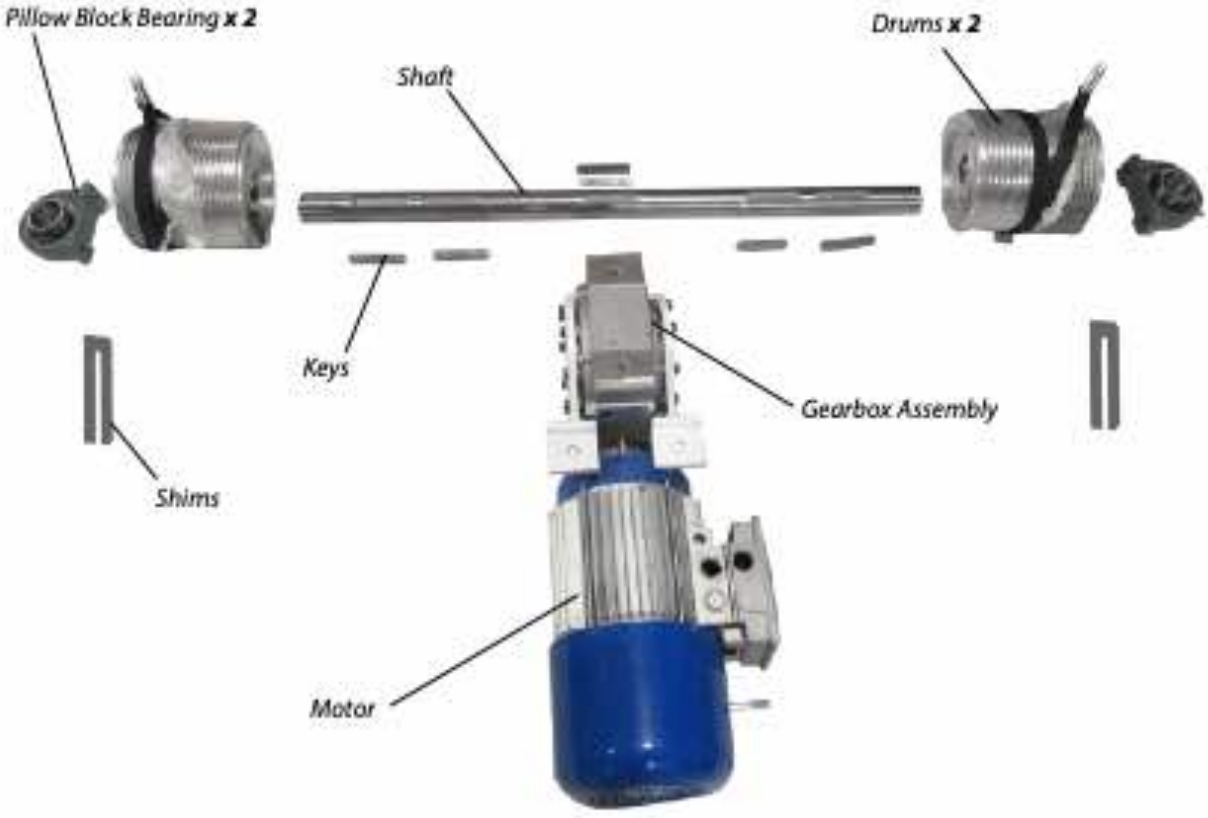

Figure 75

1 Insert two (2) keys in the keyseat at the middle of the shaft with one (1) key on top and one (1) key at the bottom. Use a rubber mallet to lightly tap the key in place if necessary. Then slowly slide the shaft into the gearbox assembly by matching the key on the shaft to the gearbox keyway/slot. See below picture.



Figure 76

2 Insert two (2) keys side by side at one end of the shaft. Tapping the keys in place with a rubber mallet if required. Slide the correct handing drum over both keys. Lock the drum in place with the provided setscrews over the top side of the keys on the shaft. Repeat the procedure to install drum on other side as well.



Figure 77

3 With the help of a second person using the provided manual lowering kit (PK-0230), pull the motor brake release handle back with one (1) hand while rotating the motor shaft with the other. Rotate the drum on the shaft in the same direction as the motor shaft rotation to reduce drag.



Figure 78:

4 Drums and gearmotor final position should be like below picture



Figure 79:

5 Installing the pillow blocks on both end of the shaft as shown below and temporarily fastened the setscrew on the bearing block. Make sure to tighten the setscrew on the bearing once final shaft alignment is achieved. Don't forget to apply Loctite 243.



Figure 80:

6 Installing rubber washers on top of the torque arm as shown below.



Figure 81:

7 Installing oversize washers on the head frame weldment as shown below.

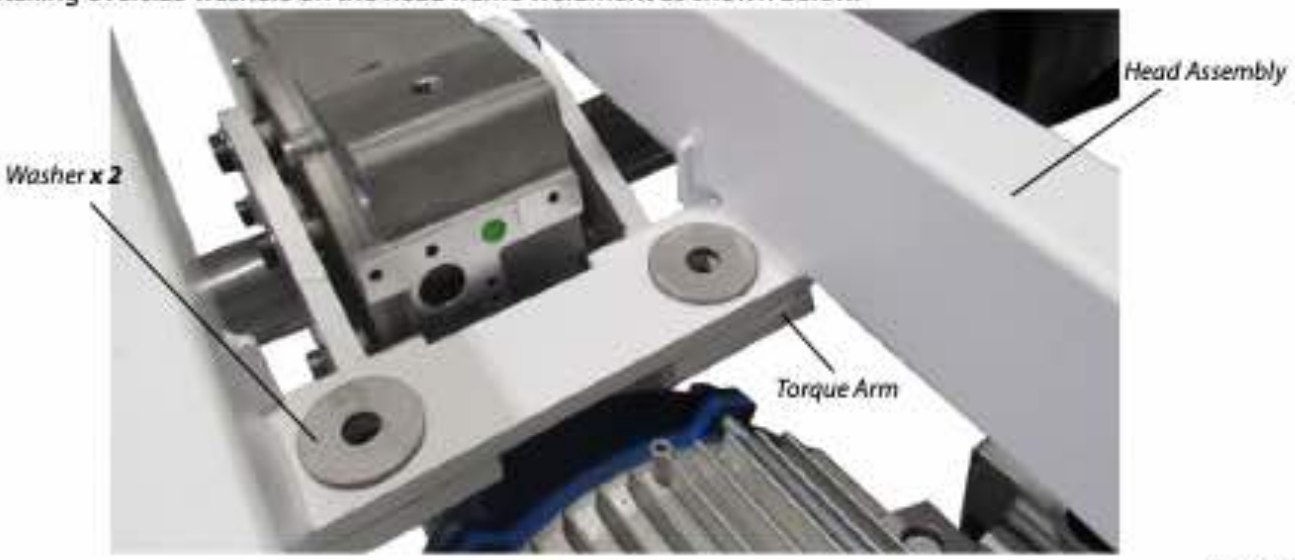

Figure 82:

8 Installing buffer rubbers on top of the oversize washers in step 6 as shown below.

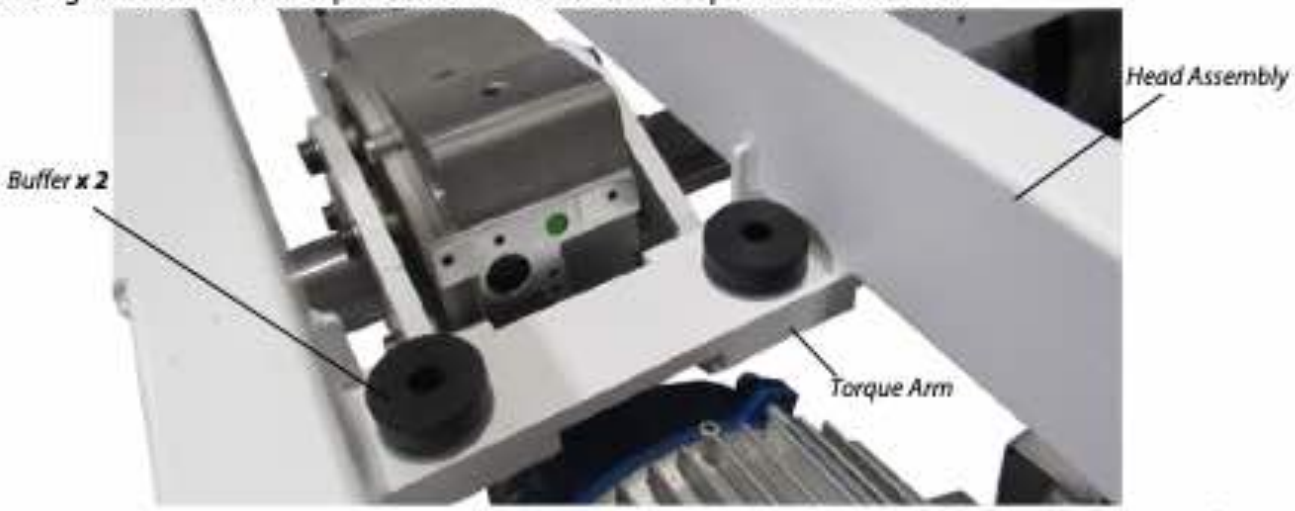

Figure 83:

9 Installing the second oversize washers on top of the buffer rubbers as shown below.

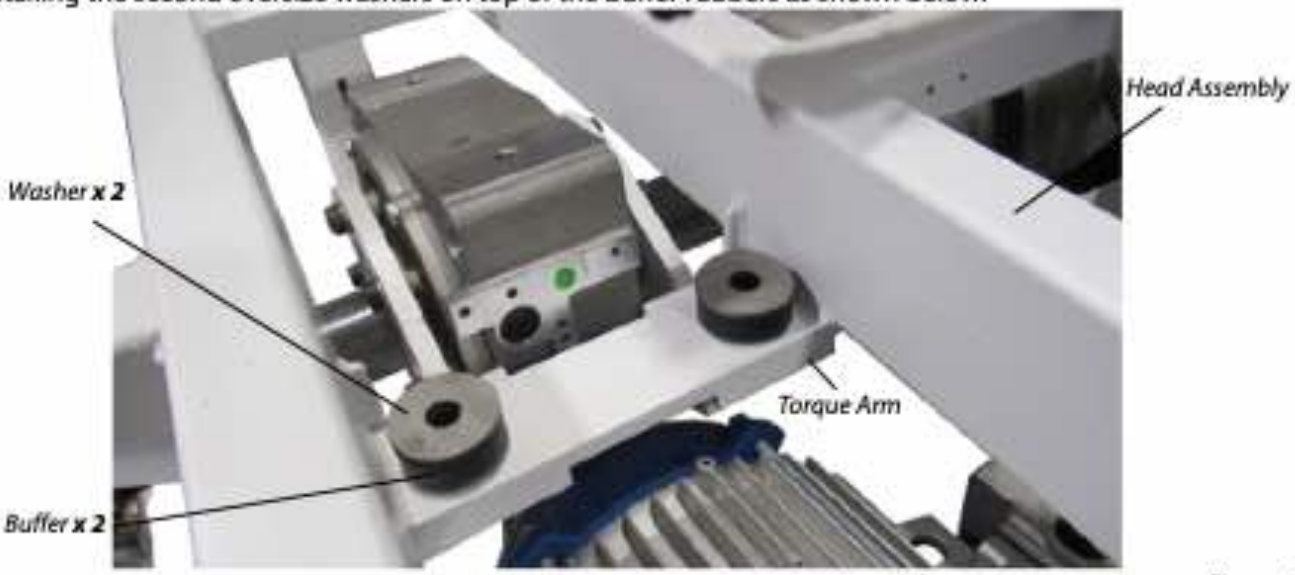

Figure 84:

10 Installing bolts on the head assembly as shown below.



Figure 85:

11 Installing 2 nuts and 1 flat washer on each of the bolt on head assembly as shown below. Hand tighten the bolt/ nuts combination. This allows for any adjustment if required during the bearings and shaft assembly. Make sure to tighten everything once final bearings and shaft alignment is achieved. Don't forget to apply Loctite 243.



Figure 86:

12 Installing and leveling pillow blocks using the shims and hardware provided, on both sides of the shaft as shown below. Make sure to tighten everything once final bearings and shaft alignment is achieved. Don't forget to apply Loctite 243.



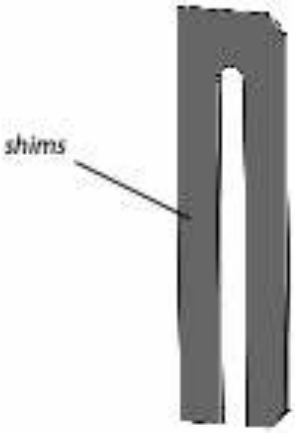

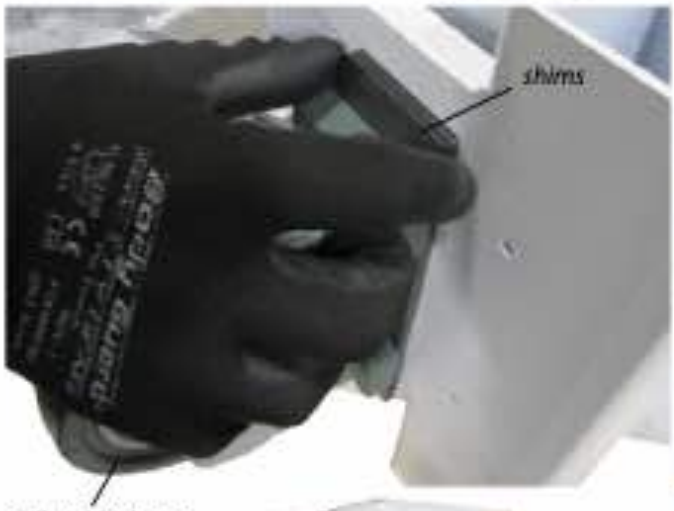





Figure 87

13 Installing the encoder bracket assembly on the shaft as shown below. Don't forget to apply Loctite 243.



Figure 88:

14 Follow the procedure below to install the encoder assembly onto the drive shaft.

a. Insert encoder axle into drive shaft hole ensuring the flat spot on the encoder axle is facing the threaded hole on the drive shaft. Ensure 1/16" gap between the encoder chassis and the drive shaft.

b. Install the set screw, ensuring it is not getting cross threaded until the set screw is tight.

c. With the set screw installed, try to gently pull the encoder assembly away from the drive shaft. If installed correctly, the encoder assembly will not pull away from the drive shaft. If there is movement:

- Remove the set screw and encoder assembly.
- Clean the threaded hole on the drive shaft with a 1/4-20 tap.
- Repeat steps 1-3 until the encoder no longer moves when installed

d. Once it's confirmed that the encoder assembly isn't moving, remove the set screw.

e. Apply the supplied loctite on the set screw and reinstall the set screw.

f. Repeat step 3 and try pulling the encoder assembly away from the drive shaft. If installed correctly, the encoder assembly will not pull away from the drive shaft.

g. Secure the encoder assembly onto the rail.

NOTICE

Failure to install the encoder assembly properly will result in inconsistent operation of the elevator, and may lead to frequent service calls.

15 After perfectly aligning the drums on the shaft so that the rope passes through holes, install 4 shaft collars adjacent to drums.



Figure 89:

16 Installing rope guards on both the drums as shown below.



Figure 90:

> **IMPORTANT**
> Please make sure to tighten all bolts/nuts and setscrews after full alignment.

INSTALL OVERSPEED BELT

1 Note that the overspeed (pulleys and gears) are pre-assembled on top of the cab ceiling weldment as shown below.

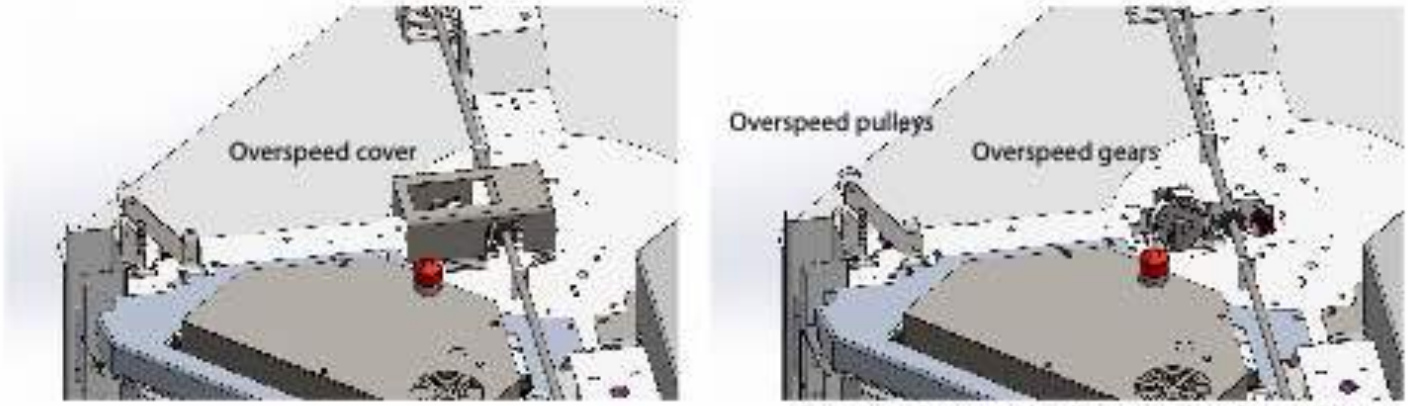

Figure 91: Overspeed pulleys on cab ceiling weldment

2 Attach the top belt bracket/tensioner assembly to the hoistway rail that corresponds to the COP location so there is a distance of 12" from the top of the elevator to the top of the bracket assembly. Use 2 screws to secure the bracket to the rail. Note that the bracket is located underneath the head assembly as shown below.

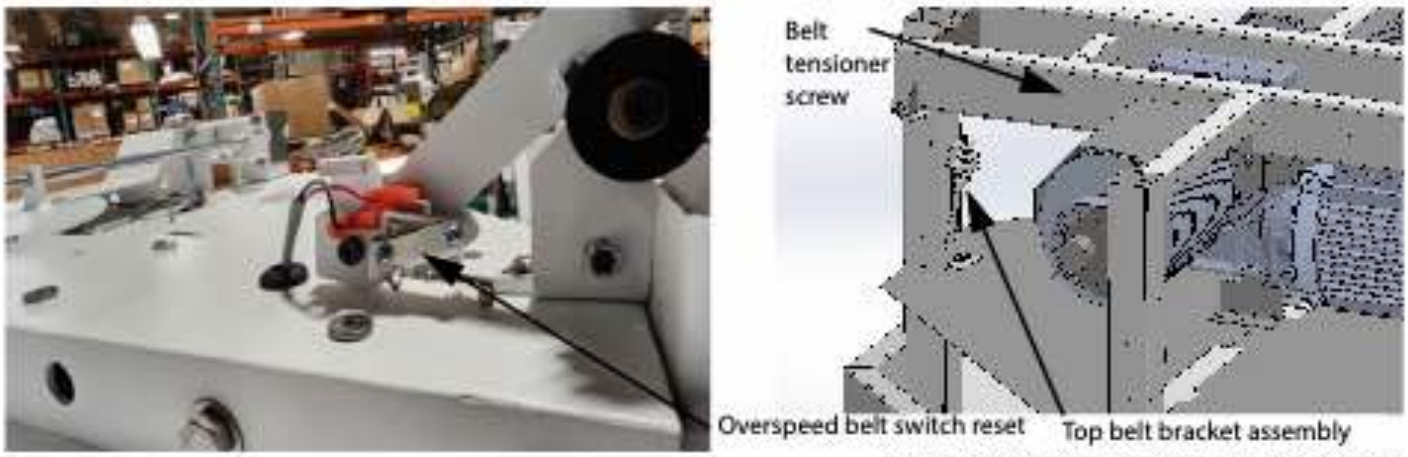

Figure 92: Top belt bracket/tensioner assembly

3 Feed one end of the overspeed belt through the slot in the bottom of the top belt bracket assembly and then clamp the belt in place using the clamp and 2 screws.
4 Route the belt down to the idler pulleys on the top of the cab ceiling weldment. See the image at the top of the next page.
5 Remove the overspeed cover and feed the belt through the pulleys as shown below.

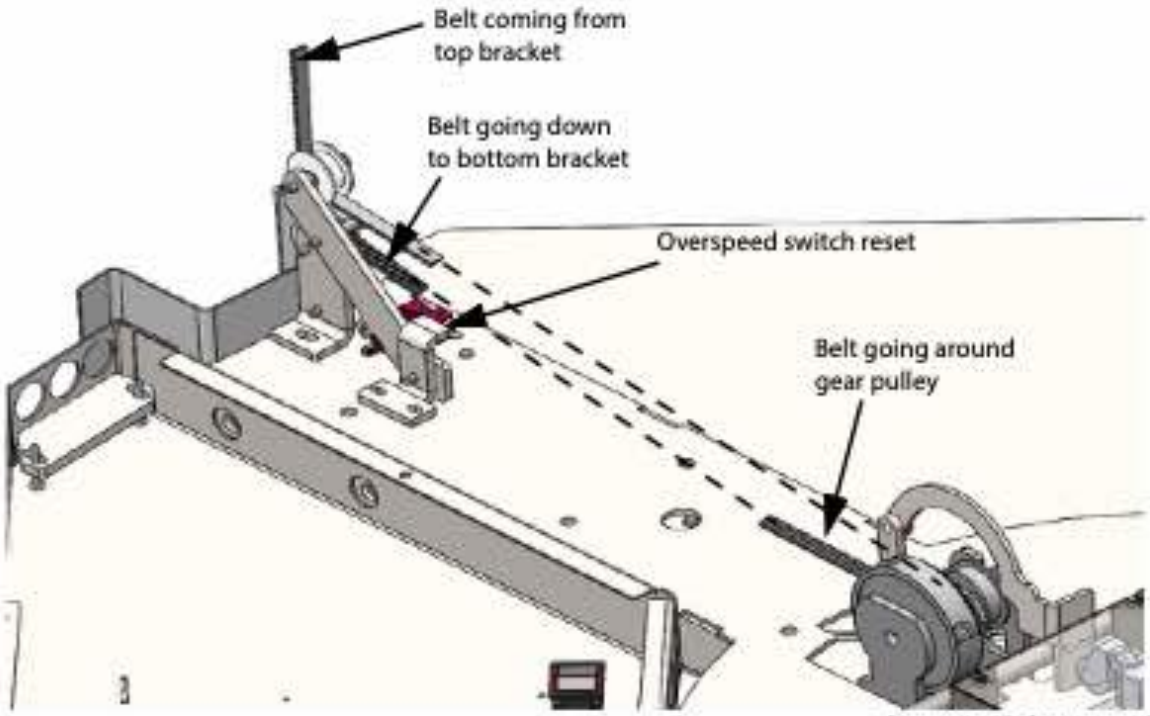

Figure 93: Belt routing through pulleys

6 Route the belt down from the overspeed pulleys to the bottom of the hoistway.
7 Feed the belt through the slot in the bottom belt bracket. **NOTE**: This bracket will attach to the same hoistway rail as the top belt bracket.
8 Pull the belt tight and then secure the bottom belt bracket to the hoistway rail using 2 screws.

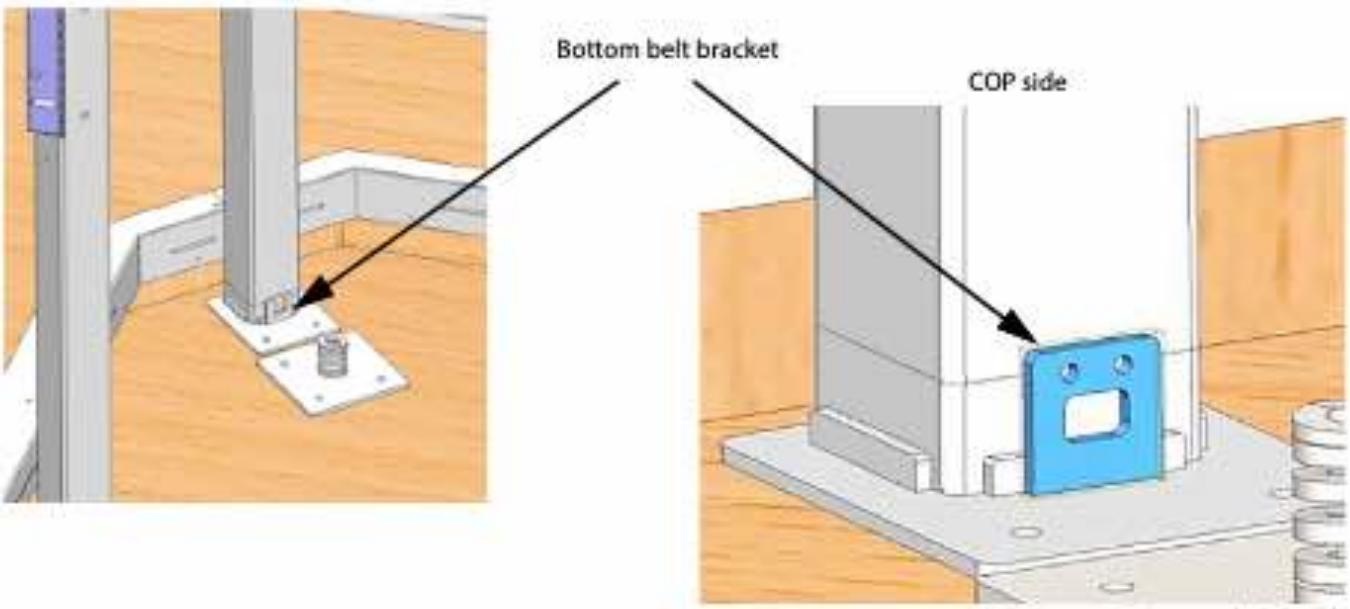

Figure 94: Bottom belt bracket

9 Ensure the screws in both brackets (top and bottom) are tight to hold the belt in place.

10 Tension the belt as needed using the tensioning screw in the top belt bracket assembly. See the image on the previous page.

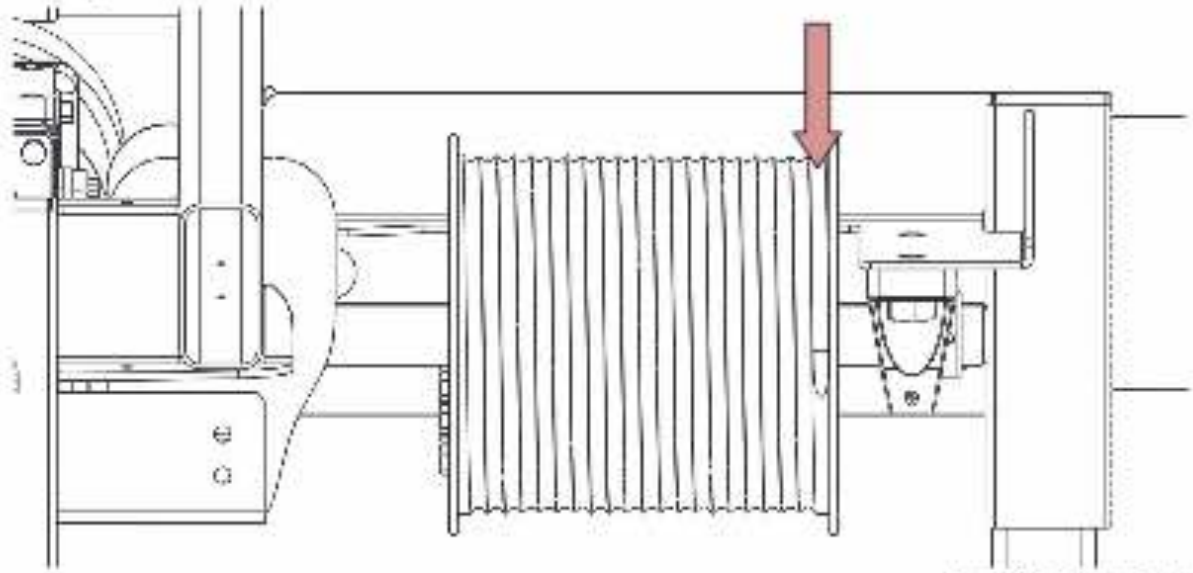

Figure 95: Drum side alignment

11 When aligned, mark the location of the drum on the axle shaft with a permanent marker, ensuring that you are marking **both sides of both drums**. The drums should be approximately 1.75 to 2 inches from the edge of the drum to the inside edge of the pillow block support bracket.

12 Slide the drum away from the pillow block bearing and insert the machine key into the keyway. Slide the drum over the machine key by gently rotating the drum back and forth until the machine key is sticking out about 1/8" at the end of the drum and the drum is properly aligned with the mark.

13 Insert the machine key for the gearbox side of the drum by sliding it into the keyway.

14 Secure the machine keys with the provided 3/8"-16 x 1/2" set screws (found in package PK-0016-1 or PK-0016-1-BO).
NOTE: Be sure to apply Loctite 242 to the set screws and tighten completely. The set screw location is shown below.

15 Repeat this process for the second drum.

> CAUTION
>
> **DO NOT** insert the machine keys too far into the drums. the drum is hollow. To remove the machine key, you must disassemble the drive train.

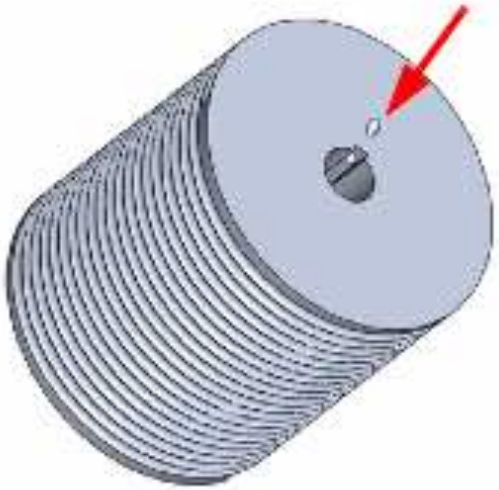

Figure 96: Set screw location

Step 32
Install cab ceiling plates

The cab ceiling comes in two pieces (cab ceiling plates) that are secured in place with barrel nuts.

1 To install the cab ceiling, place one of the cab ceiling plates up against the cab ceiling weldment, lining up the studs on the plate with the corresponding holes in the bottom of the ceiling weldment. Be careful not to break off the studs.

> **IMPORTANT**
>
> There are 2 different ceiling plates. One of the ceiling plates (for a Type 1 cabs) will have 5 holes: 1 for the fan, 1 for a cab light, 1 for the rope end and 2 smaller holes at one edge that must be located on either side of the door opening. The second ceiling plate will have 2 holes: 1 for a cab light and 1 for the rope end.

> **CAUTION**
>
> It is important that the cab rails are not scratched during ceiling plate installation. The installation of these plates is simplified if the sides of the cab ceiling plate with half cutouts for the cab rails are placed against the cab ceiling weldment first, then the cab ceiling plate is pivoted into place around the cab safety rail.

2 Use flange nuts and barrel nuts (as appropriate) to secure the ceiling plate to the cab ceiling weldment (finger tight).

3 Repeat for the second cab ceiling plate.

4 After both plates are installed loosely, align the plates until there is a uniform seam between them and then tighten all nuts.

5 Install the 2 cab lights in the cab ceiling. The cab lights are a press fit and should be connected to the appropriate harness in the car top box.

6 Install the cab fan (in the correct flow orientation stamped on the side of the fan) in the large hole in the cab ceiling. Ensure the grill is facing **downward** into the cab.

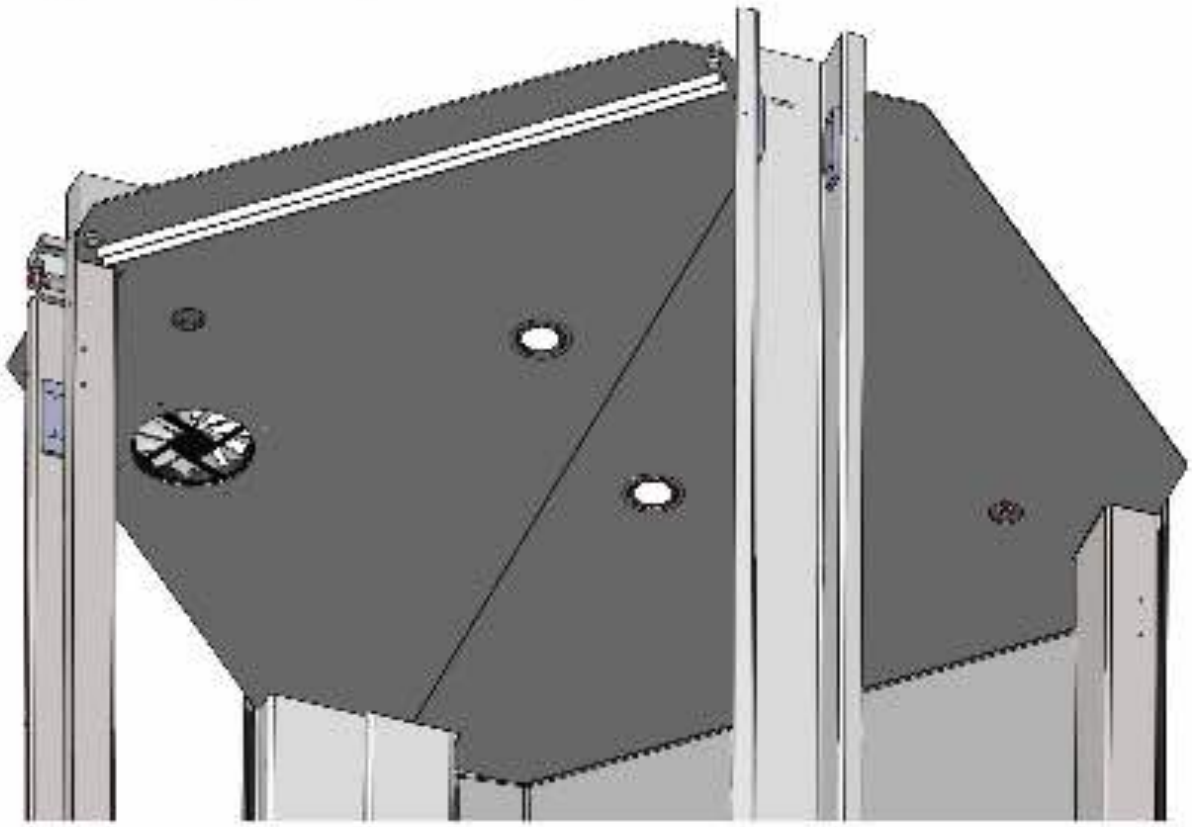

Figure 97: Installation of cab ceiling plates

ELECTRICAL COMPONENTS

> **CAUTION**
>
> This section outlines the electrical components of the Vuelift. Follow these directions closely. Failure to comply with the steps in this manual may cause bodily harm, unintended operation, and other serious safety hazards.

The Vuelift Micro-6 comes with a controller which is configured for up to six stops. Depending on the number of stops your unit has, the length of time to wire and configure the unit will vary.

Wiring the **Motor**, **Car Lighting Circuits** and **Safety Circuit Components** is the same throughout all configurations, however the number of **Hall Call Buttons**, **Car Call Buttons**, and **EMIs (interlocks)** will change given the number of stops each site has.

This section covers installation of the controller, car top box, COP, limit switches, hall calls, and EMIs (interlocks). Some wiring information is provided also.

Additional wiring, such as the **Gate Switch** will be performed after glazing the hoistway and car.

Refer to the Electrical Schematics provided with the elevator for schematics and wiring diagrams.

> **CAUTION**
>
> The Vuelift controller has 230VAC and 115VAC high voltage, and 12VDC and 24VDC low voltage wiring. All electrical work must be performed by qualified personnel trained in accordance with all local, state and federal regulations governing electrical products and systems. Failure to observe these requirements can result in serious injury, bodily harm or death to installers, field personnel and/or end users.

Step 33
Install controller assembly

There are two types of controller assemblies:

- Standard Micro-6 controller assembly (installed remotely)
- Optional triangular-shaped Micro-6 controller assembly (installed in the head assembly); for use with 1.5 HP motor only

STANDARD MICRO-6 CONTROLLER (INSTALLED REMOTELY)

Install the standard Micro-6 controller assembly (shown below) in a remote location as appropriate for your site conditions.

Refer to the Electrical Schematics provided with the elevator for schematics and wiring diagrams.

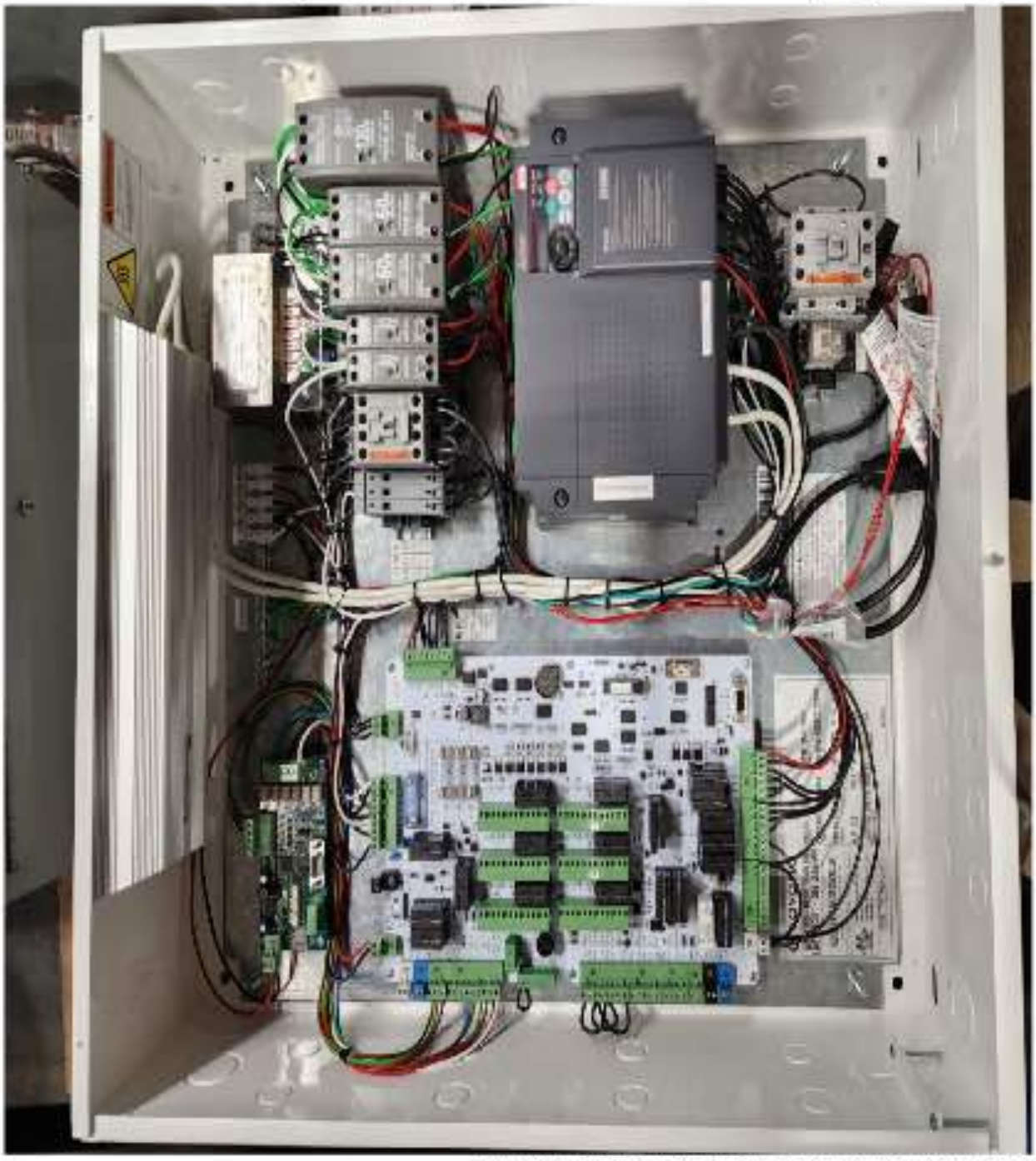

Figure 98: Standard Micro-6 controller assembly (installed remotely)

OPTIONAL TRIANGULAR-SHAPED MICRO-6 CONTROLLER (INSTALLED IN HEAD ASSEMBLY)

Attach the optional triangular-shaped Micro-6 controller assembly (shown below) to the head assembly using 4 bolts and associated hardware at each cross-member (8 bolts total).

Refer to the Electrical Schematics provided with the elevator for schematics and wiring diagrams.

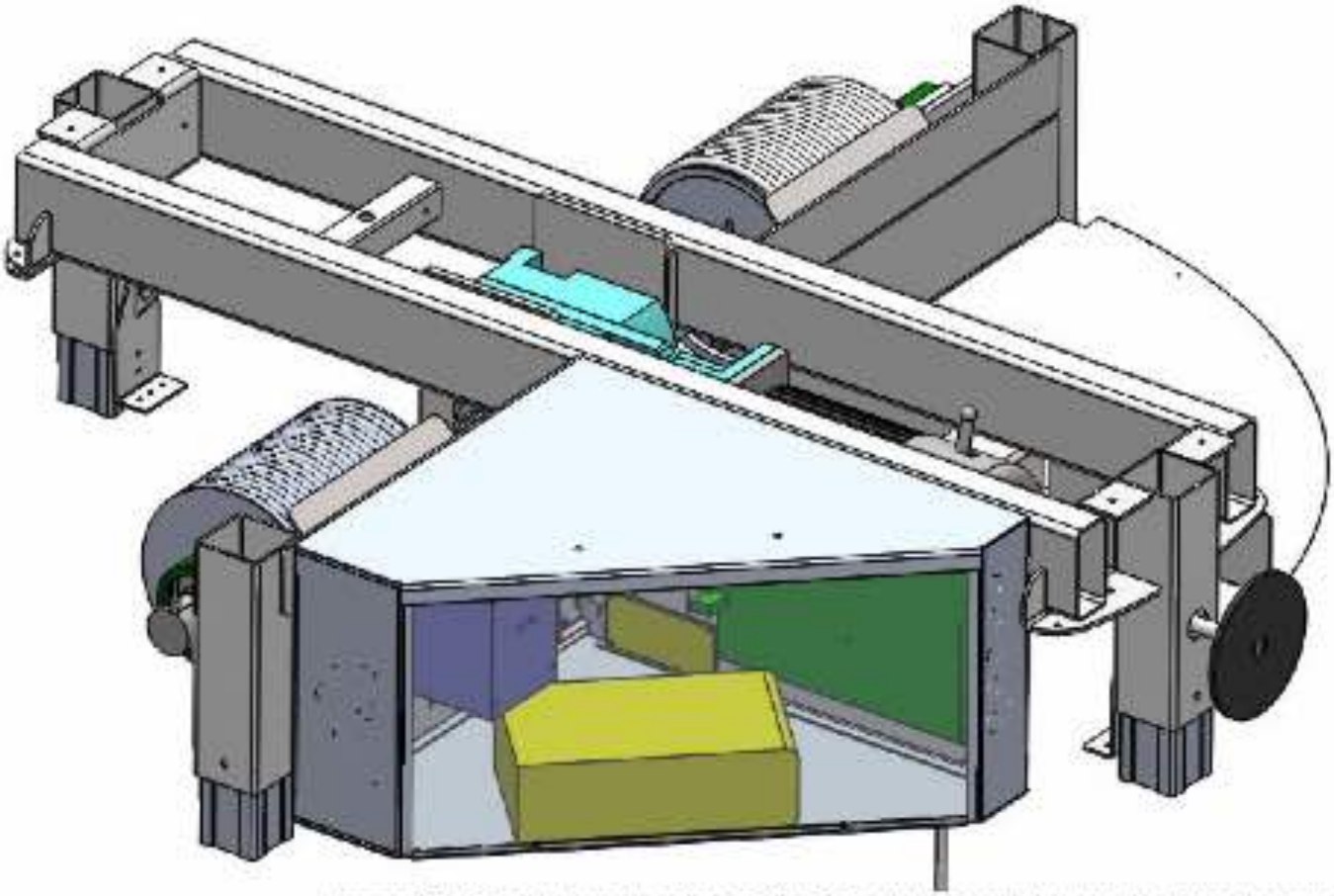

Figure 99: Optional triangular-shaped Micro-6 controller assembly (installed in head assembly)

Step 34
Install Reset Switch

1 Open the 2 screws (A) to remove wires from the pre-wired reset switch as shown in the image.

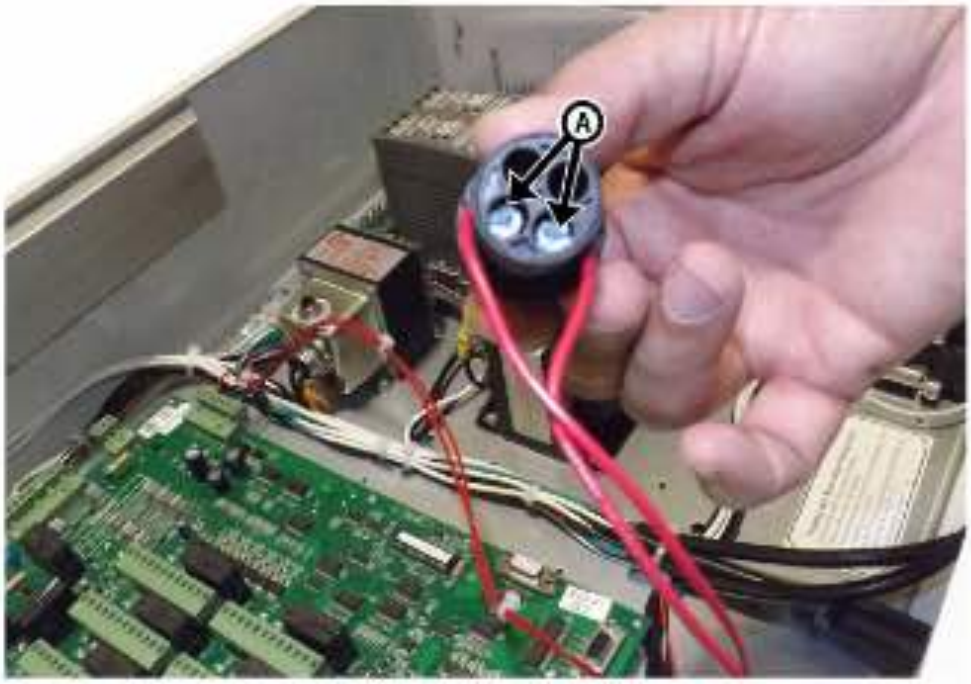

Figure 100:

2 Remove any knockout from the controller box, install the reset switch (A), and paste the label (B) close to switch as shown in the image.





Figure 101:

3 Reinstall the wires to the switch and secure with screws.

Step 35
Install car top box

Mount the car top box on top of the car in the location shown below using the 2 bolts already present on the roof.
Note that the red car top STOP switch is on the cover of the car top box.
Refer to the Electrical Schematics provided with the elevator for schematics and wiring diagrams.

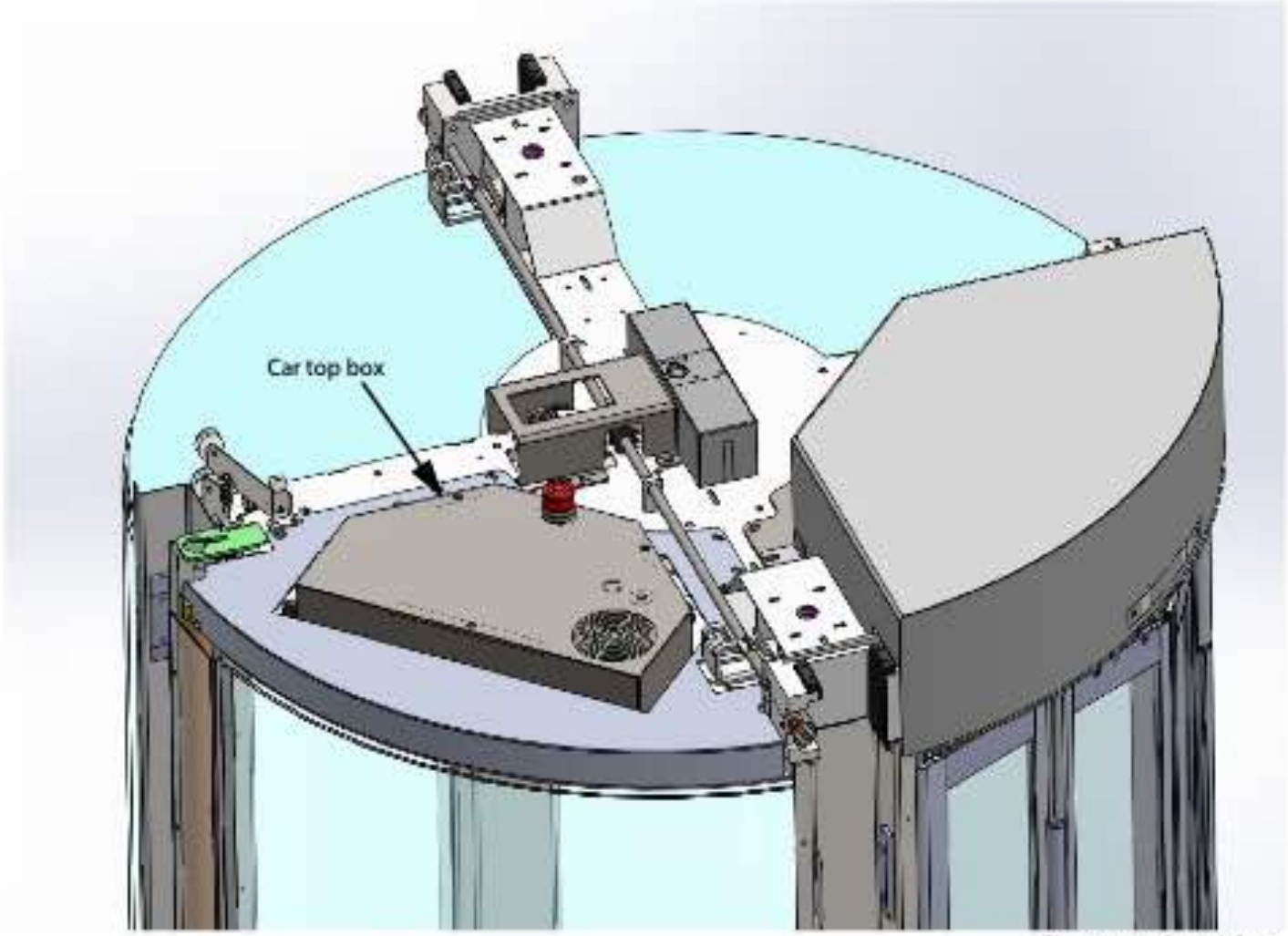

Figure 102: Car top box

Step 36
Install car top prop and CTIS (if applicable)

Car top prop

Install the car top prop on top of the cab in the location shown below. Secure the prop in place using the three 1/4-20 screws provided.

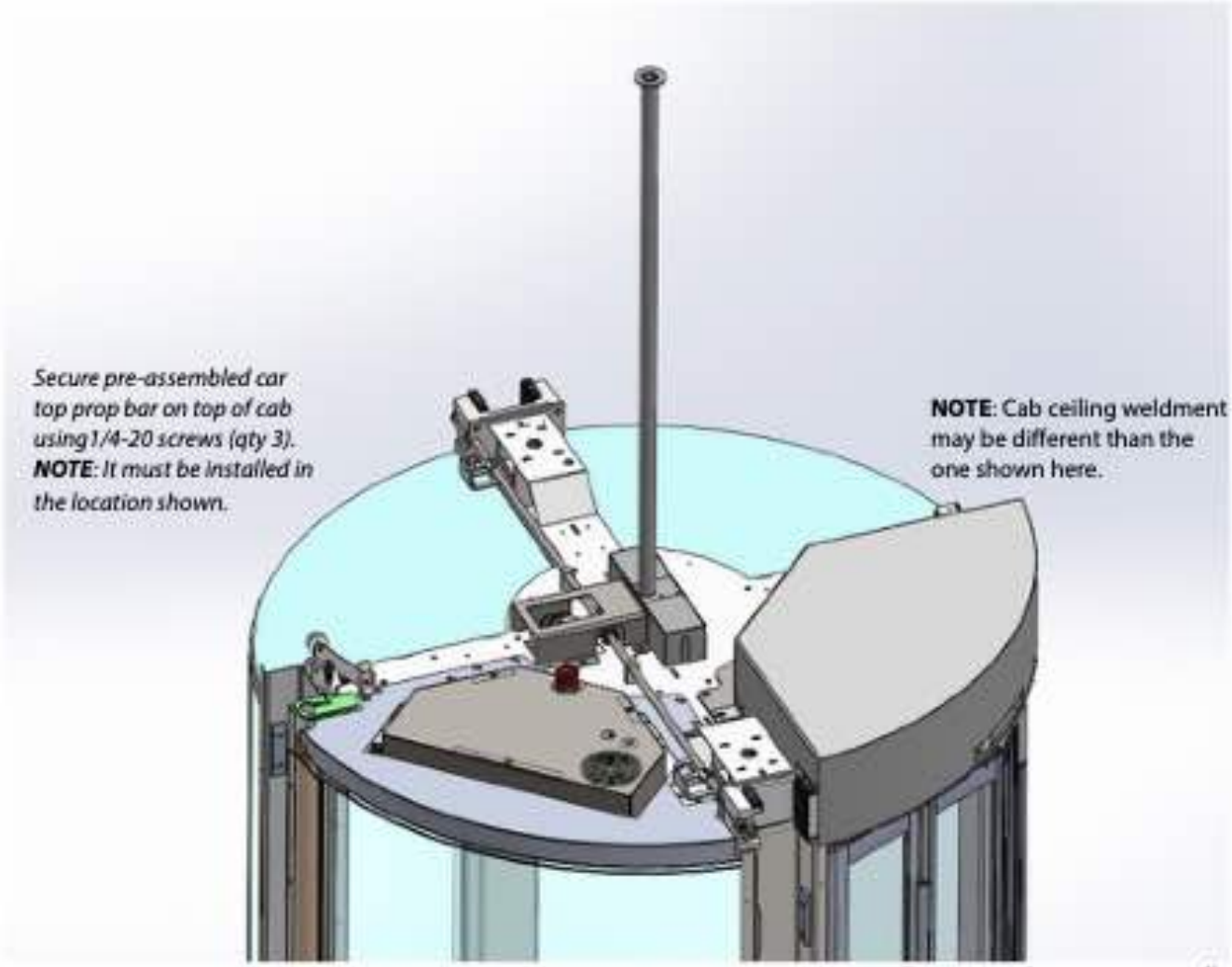

Figure 103: Car top prop installation

Ensure the car top prop bar is inline with the pre-welded strike plate on the head frame when it is in the upright (engaged) position as shown below.



Ensure the prop bar is inline with the pre-welded strike plate on the head frame when it is in the upright (engaged) position.

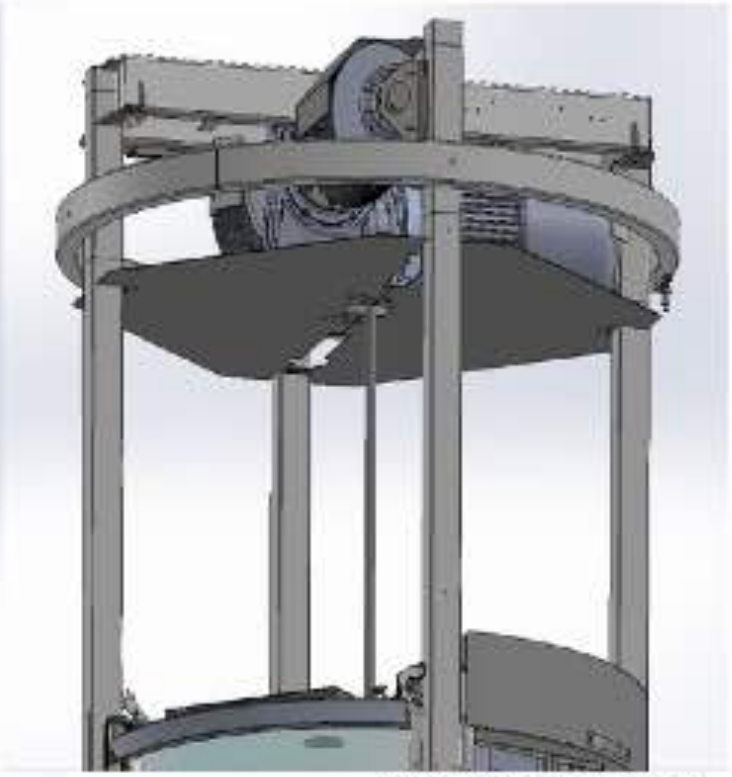

NOTE: Cab ceiling weldment may be different than the one shown here.

Figure 104: Car top prop in line with 3/8" thick strike plate mounted on the bottom of the gearbox in the head frame

Install car top inspection station (CTIS)

Install the car top inspection station (CTIS) on top of the cab in the location shown below. Secure in place using the four #10 self-tapping screws provided.

Wire the CTIS per the Electrical Schematics shipped with the elevator.

Step 37
Minimum required wiring for manual operation

In order to rope the car in subsequent steps, it is not necessary for the controller to be wired in its entirety.

To accelerate the installation process, it may be advantageous to have the car running in **Temporary Mode** prior to completely wiring the hall call stations, EMIs (interlocks), COP and safeties.

Instructions on entering **Temporary Mode** can be found in ***Appendix B: P-Tool Information***.

The following is a minimum list of wiring required to operate the car in **Temporary Mode**:

- Controller must be wired to LOAD side of disconnects
- 230V is required, 110V is optional
- Motor and motor brake must be wired
- Limit switches must be mounted and operational
- Temporary jumpers on the controller board between the following points (TC4 & TC5, TC4 & TC6, and TC11 & FL6.4)
- Unplug the 2-pin power connector (black and red wires) on the EC1 encoder board

CAUTION

Operating the car with the minimum wiring required should only be performed with close supervision of the car platform and surrounding objects! Ensure the car does NOT travel in Automatic Mode, as upper and lower landing overtravel may occur. Failure to follow these directions may result in catastrophic equipment failure and damage. NEVER assume the controller has remained in Manual Mode. Always be prepared to stop movement of the car by activating a safety device or turning off the disconnect switch!

WARNING

When operating in Temporary Mode, the safety circuits and limit switches are defeated by the temporary jumpers. The temporary jumpers MUST BE REMOVED before putting the unit in Automatic Mode.

DANGER - SHEAR HAZZARD

NEVER use the hoistway rings as a hand-hold when the unit is moving or could move.

Step 38
Controller power wiring

1 Route the wires to the controller.
2 Terminate the wires in their proper location inside the controller.
3 The diagram below shows the wiring schematic for the 230V disconnect wiring (left) and the 110V disconnect wiring (right).

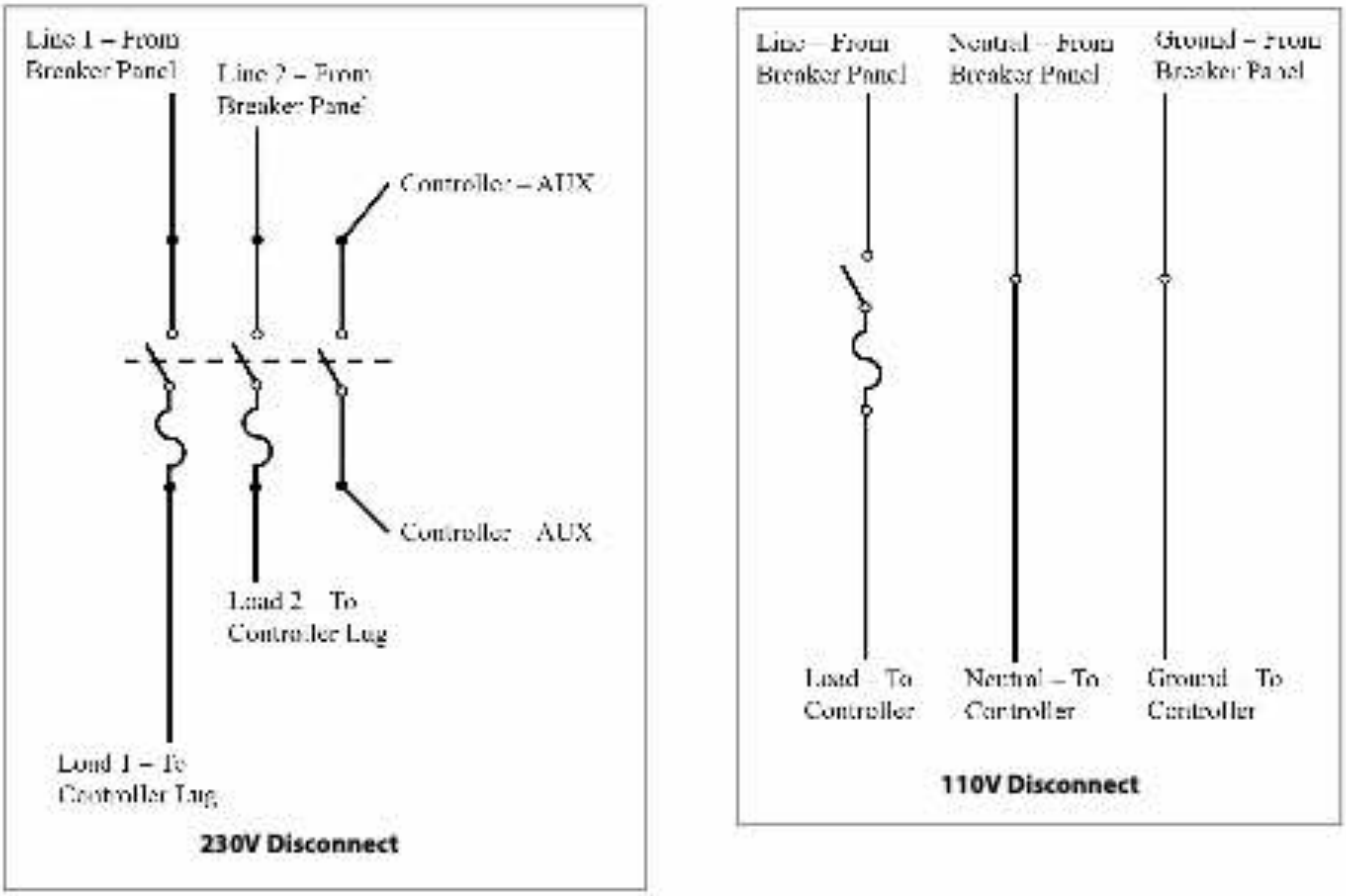

Figure 105: Disconnect wiring schematics

Step 39
Preliminary call station wiring

DO NOT cut the ends of any cable or wire until they have been test fit inside the controller.

The Vuelift requires one cable per floor for hoistway wiring for the EMI (interlock) and hall call buttons. The cable will be located in the box labeled HOISTWAY WIRING PACKAGE. There will be different lengths depending on the floor it is assigned to and depending on the total number of floors. The wires will be labeled with the intended floor.

1 To run the wire for the EMI (interlock) and hall call buttons, affix a bolt or other heavy object to the end of the wire using electrical tape.

2 While tightly holding the other end of the wire, slowly feed the wire **down the EMI (interlock) rail from the top of the hoistway** as shown below until it reaches the cutout in the EMI (interlock) rail for the correct floor.

3 Secure the end of the wire at the top of the hoistway so it does not fall down the rail then remove the bolt from the other end of the wire.

> **NOTICE**
> If the wire seems to get caught in the rail, simply wiggle the wire inside the rail until it is free.

4 Repeat this process for each EMI (interlock) rail at each floor.

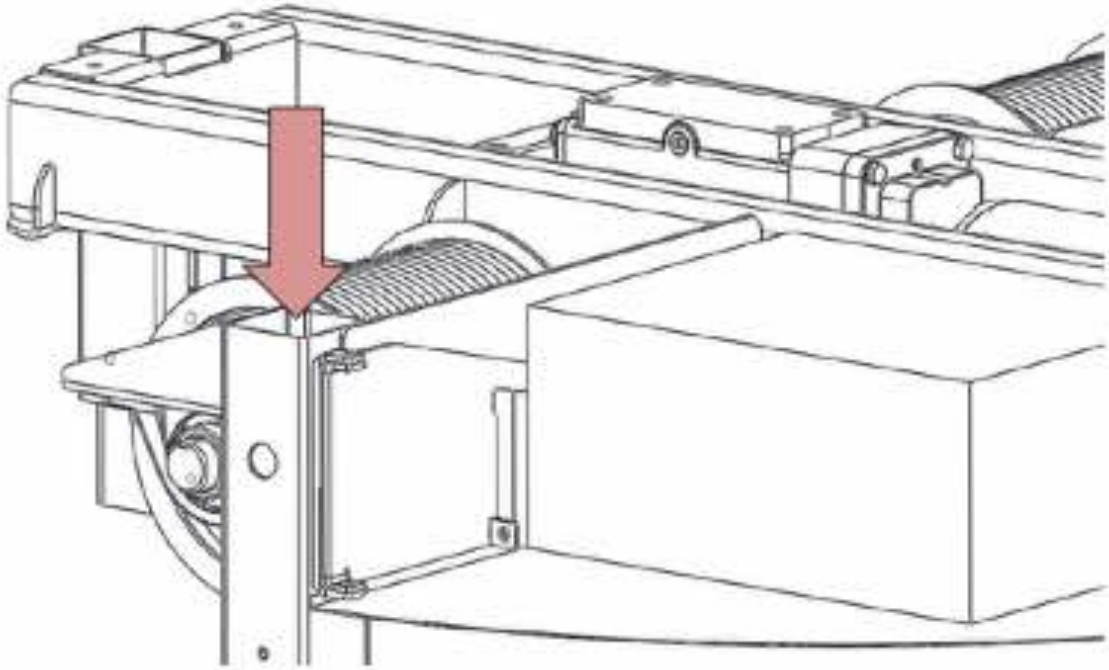

Figure 106: Insert wires in top of EMI rails

Step 40
Install limit switches (upper and lower)

The following procedure describes how to install the 3 upper limit switches and the 2 lower limit switches.

1 Mount the upper limit switch assembly as shown below, ensuring that the switches activate when pressed. The assembly consists of 3 switches and a mounting bracket. Secure the bracket to the car top using a self-tapping screw in the slot.
   - Upper Terminal Limit (UTL) - WHT and BLK wires
   - Upper Final Terminal Limit (UFTL) - RED and GRN wires
   - Upper Final Limit (UFL) - BRN and BLU wires

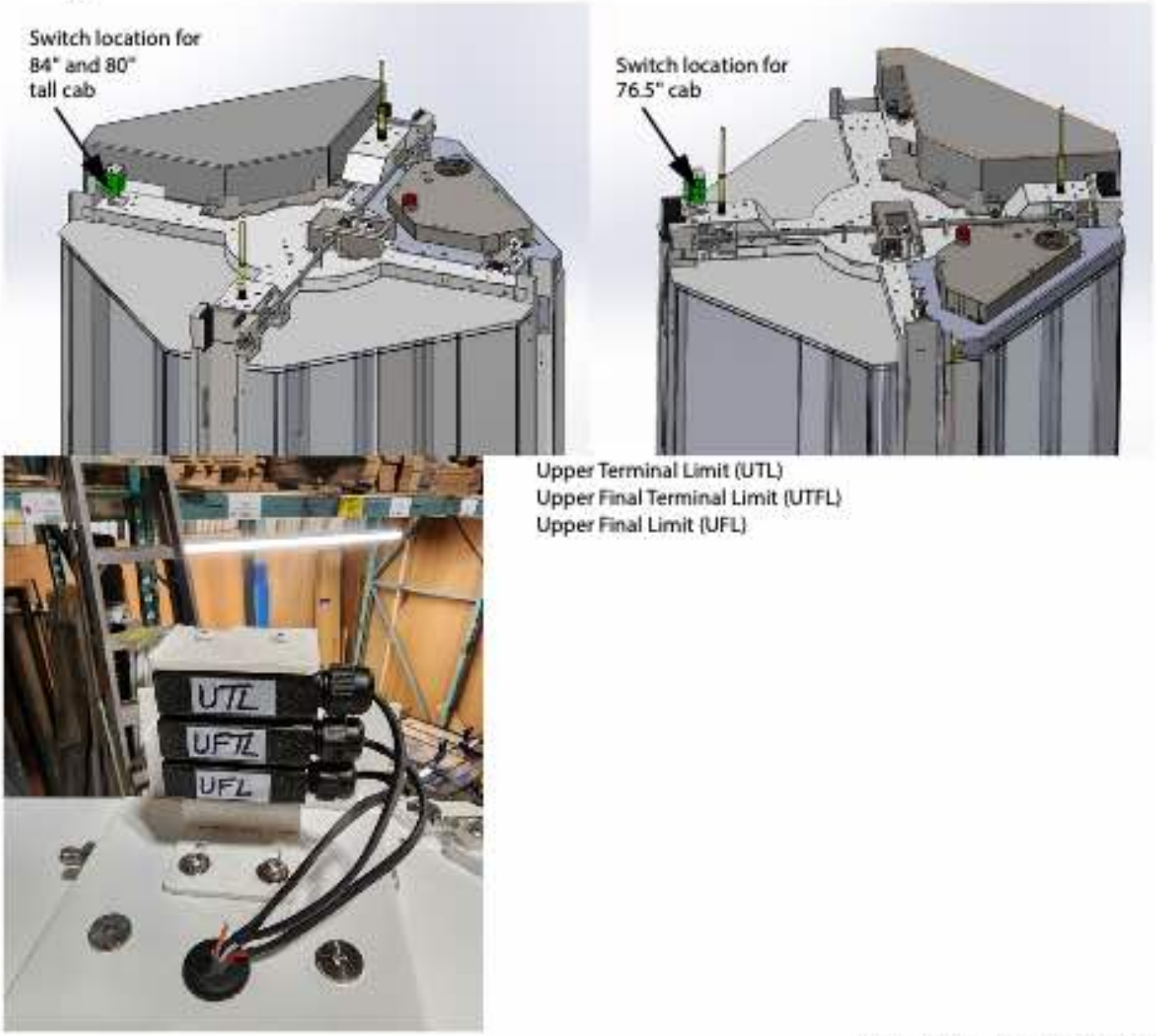

Figure 107: Upper limit switches

2 The minimum distance above the top landing to the **bottom** of the switch depends on the cab configuration.

3 Run the car to the top floor and mark the rail in line with the top limit switch.

4 Mount the cam on the rail (using the hardware provided) so it faces the switches, about 1-2" above the mark (shown below)

5 Verify that the limit switch activated if the car over runs the top floor by 1-2"

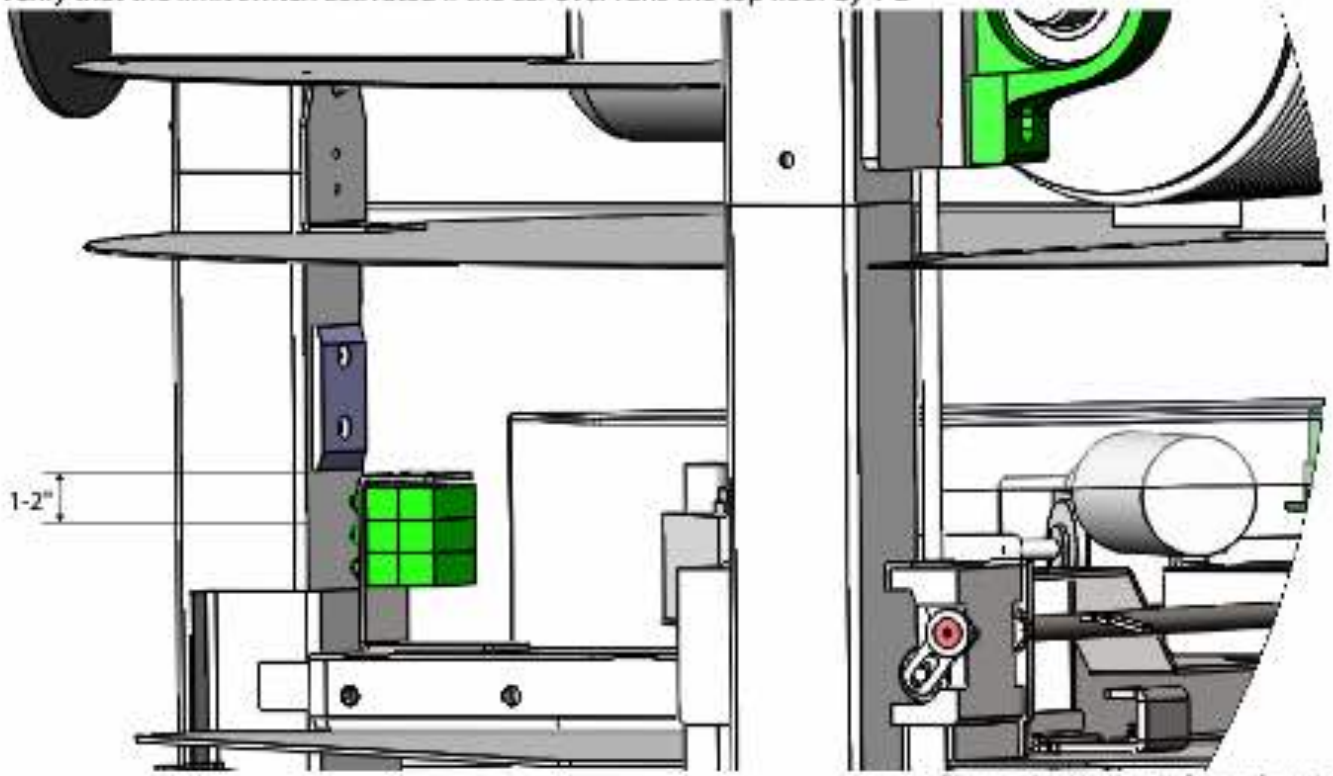

Figure 108: Limit switch cam location

6 Mount the 2 lower limit switches as shown below. Secure them to the underside of the car using self-tapping screws.
- Lower Terminal Limit (LTL) - WHT, BLK and RED wires
- Lower Final Terminal Limit (LFTL) - GRN and BRN wires

7 For wiring, refer to the Electrical Schematics provided with the elevator.

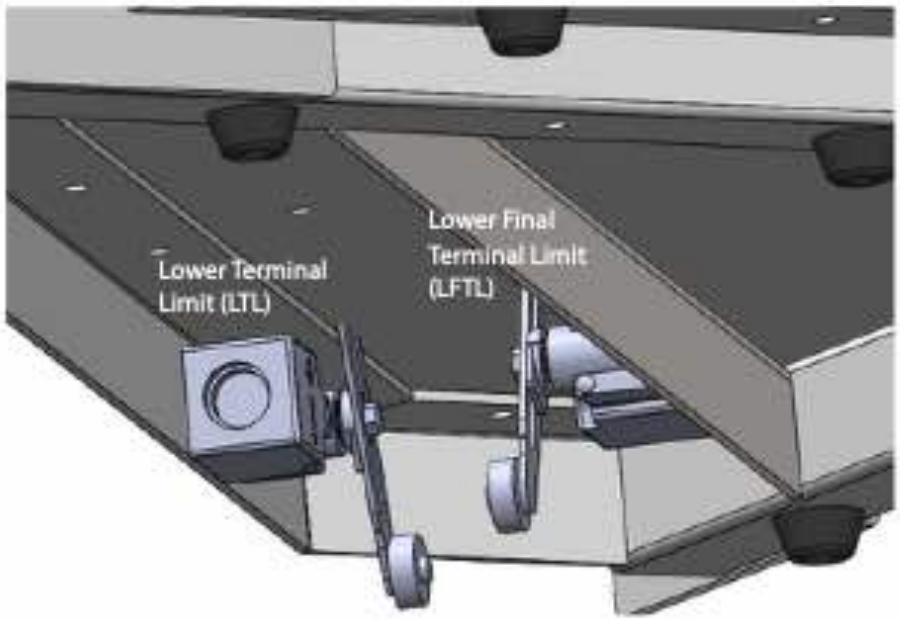

Figure 109: Lower limit switches

Step 41
Install EMIs (interlocks) and hall calls

Be sure to follow the proper steps when mounting the EMIs (interlocks) and hall calls to ensure that the hoistway door, when mounted, will interact with the safeties and switches properly.

To mount the EMI (interlock):

1 Insert the top end of the stiffener up into the cutout in the EMI rail at the landing. **NOTE: Be careful not to let it fall down into the rail.**

> **NOTICE**
> When inserting the EMI rail stiffener that any wires for other floors passing through the EMI rail do not get pinched or cut. Ensure that the EMI stiffener does **NOT** fall down the hoistway rail.

2 First, line up the holes in the stiffener with the holes in the **entrance side** of the rail and secure at the entrance side first. Use the #10 x 1/2" flat head sheet metal screws provided in the EMI package.

3 Use the same screws to secure the stiffener at the other side of the rail.

> **IMPORTANT**
> Make sure the screw heads are NOT protruding out of the countersunk hole as the car guide shoes travel directly over the EMI stiffener mounting screws. Protruding edges will negatively impact the performance of the guide shoes.

4 The illustration below shows the EMI rail stiffener in place with the entrance side secured.



Figure 110: EMI rail stiffener

5 Install the reed switches and their corresponding magnets.

a. Before installing the switches, use a 5/16-24 tap to clean the switch hole in the EMI (interlock) rail.

b. Thread the **lock reed switch** into the entrance-side hole in the EMI (interlock) rail (see below), until it is flush with the outside of the rail.

c. Thread the **IN2 reed switch** into the hole on the opposite side of the EMI (interlock) rail, until it is flush with the outside of the rail. ***NOTE**: The IN2 reed switch is only required at the bottom landing.*

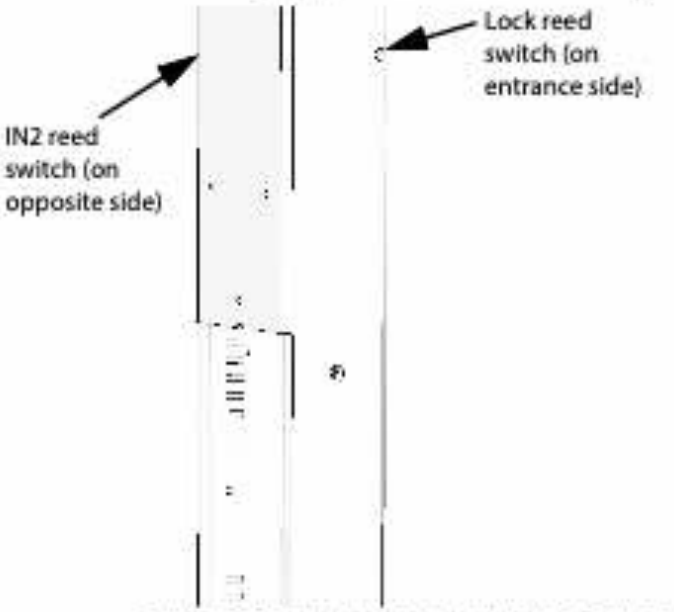

Figure 111: Location of reed switches in EMI rail

d. Apply one small drop of silicone caulking or super glue to the threads of the each switch after installation to ensure they do not vibrate out of position.

e. Wire the **lock reed switch** per the Electrical Schematics shipped with the lift.

f. The **IN2 reed switch** must be wired back to the controller, to the EC1 PCB connector J6-+V and J6-IN2. Use the supplied 2-conductor wire to accomplish this.

g. Two magnets are required to activate the reed switches.

- The **lock reed switch magnet** is required to activate the switch when the car is sitting at the floor. Place the magnet on the car rail, so that it lines up centered with the switch when sitting at the floor (entrance side).
- The **IN2 reed switch magnet** is required to activate the switch when the car is just above the bottom landing and stay activated until the car travels down onto the IN1 switch (NLD) while performing a reset. Place the magnet on the car rail on the opposite side, with it activating the switch as described above.

6 With the cover removed from the EMI (interlock), install the interlock to the stiffener using the #10 x 1" self drilling/tapping hex head screws.

7 To complete wiring of the interlock, insert the plug end of the interlock harness into the mating connector on the landing harness and then install the lock cover.

8 Install the lock cover.

9 The illustration below shows the lock mounted with the hoistway door closed.

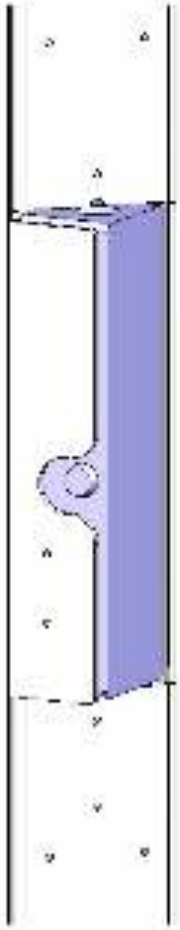

Xtronics key (301824)



Figure 112: Interlock installed

10 If there is an issue where the beak does not line up properly with the lock, you can shim the lock as shown below.



Figure 113: Shim for Xtronics lock

11 Install the lock cover with bend as shown below.



Figure 114: Lock cover with bend for Xtronics lock

12 The hall call button contact will come pre-wired. Simply plug the landing harness into the back of the button.

13 Attach the hall call button contact to the hall call button housing.

14 Mount the hall call button housing to the EMI (interlock) rail.

15 The illustration below shows the proper alignment and attachment of the hall call button above the interlock.



NOTE: Lock may not be exactly as shown.

Figure 115: Proper alignment and attachment of hall call button housing

Step 42
Install COP leg

> **NOTICE**
> Refer to Appendix G for Set up, programming (including how to turn off auto-answer) and troubleshooting of the Rath 2400.

1 Align the COP leg to the side of the non-safety rail directly adjacent to the cab lifting point. Use a paint pen or permanent marker to mark the clearance holes in the COP leg on the side of the non-safety leg.

> **NOTICE**
> It is important that the COP rail be aligned flush with the front face of the non-safety rail and that the clearance holes for the rail guide shoes are aligned with the fasteners holding the rail guide shoes to the side of the non-safety rail.

2 Remove the COP leg and drill and tap the marked locations for a 10-24 screw. A 10-24 tap uses a 5/32" drill bit (or #20).

3 Fasten the COP leg to the non-safety rail. Note that there is no Velcro on the COP side of the non-safety rail that you are attaching the COP leg to.
- **The COP must be attached to the non-safety rail directly adjacent to the cab lifting point**, due to the orientation of the drive train ropes, and traveling cable.

4 When the holes in the non-safety leg and the COP leg are aligned, insert the #10-24 x 3/8" button head screws and tighten completely to secure the rail and leg together.

5 The photos below show the orientation of the COP leg on the non-safety rail and the COP leg and non-safety rail secured together.





Figure 116: COP leg attached to non-safety rail

Step 43
COP and wiring

The Car Operating Panel (COP) is integrated into the COP leg (front and rear views shown below).
To attach the panel, you need to drill and tap holes (10-32 size).
For wiring, refer to the Electrical Schematics provided with the elevator.







Figure 117: COP location

The traveling cable hardware package contains three flat bars, used to clamp the traveling cable, and assorted fasteners. The bars with the tapped holes are designed to attach to the COP leg, and the bar with the clearance holes secures the traveling cable to the head assembly.

NOTICE

The traveling cable must be routed *inside* the rings at all levels, and will loop at the bottom of the pit or base ring. Ensure the traveling cable does not have any twists in it, or it will bind as the car travels through the hoistway.

DO NOT cut the traveling cable! Retain all existing cable in the head assembly and secure against movement with zip-ties.



Figure 118: Traveling cable secured to head assembly

1. The length for the round traveling cable should be measured from head frame. **DO NOT cut the traveling cable**. Secure any excess in the head assembly.
2. Ensure that the loop made by the flat traveling cable in the pit or base ring touches the floor, but there is no excess accumulated in the pit or base ring.
3. Next, run the COP wires to the car top box. Note that the COP wires enter the car top box in the same location as the traveling cable.
4. When the appropriate length has been determined, and the traveling cable has been adjusted properly, terminate the traveling cable in the car top box and clamp in place using the hardware provided (see below).
5. Refer to the Electrical Schematics for wiring information.

Step 44
Controller wiring

Wiring the Vuelift controller has been designed to be quick and efficient. All low voltage connections are plug and play.

Line voltage (cab light circuit, motor circuit and battery backup) will require termination into the provided terminal strip and fuse holder.

***IMPORTANT**: Ensure connections are made properly to eliminate or reduce the amount of time required to troubleshoot wiring problems. If wiring is rushed, many hours can be required to repair and troubleshoot electrical problems.*

When wiring the controller, the hall call station wires and the traveling cable wires should be plugged into the appropriate connector inside the controller.

The rotary encoder wires should be pulled through with the hall call and final stop low voltage wires. Rotary encoder wires are to be terminated into the J3 connector on the EC1 PCB. Refer to the Electrical Schematics for wiring information.

> **CAUTION**
>
> Ensure that the controller is OFF prior to plugging in the rotary encoder connections. Failure to ensure the controller is OFF when connecting or disconnecting the encoder will damage the encoder equipment. This damage is NOT covered under the factory warranty.

ROPING AND SLACK ROPE SWITCHES

Step 45
Roping car and temporary mode operation - preliminary

Roping the car requires six different procedures, designed to simplify adjustment and speed up installation.

1 Check electrical connections in the motor, controller and disconnects.
2 Unwind the ropes to the car location.
3 Attach the ropes to the car and pre-tension them.
4 Adjust the ropes if necessary to provide equal rope tension.
5 Install cotter pins in the rope ends. **Cotter Pins are Mandatory for this installation!**

> **NOTICE**
> Be sure to REMOVE the wooden shipping blocks from the rope attachment areas of the cab ceiling weldment (next to each safety) after installing the ropes.

> **CAUTION**
> Check all motor to controller connections prior to energizing the controller and equipment.

6 Prior to turning on the controller, check the electrical connections to ensure they have been made correctly.
   - Ensure the motor and brake have been wired properly.
   - Ensure the Line and Load side high-voltage wiring in the controller has been performed properly.
   - Ensure the disconnect has been wired properly according to the manufacturer's recommendations and the wiring diagrams outlined in this guide.
7 The following sections describe roping the car, operating the controller in **Temporary Mode**, and setting the landing positions.

Temporary mode operation and roping the car

1 Once wiring has been verified, turn power **ON** to the controller.
2 To rope the car, you must place the controller in **Temporary Mode**. To do this, connect the P-Tool to connector J1 on the Micro-6 controller board and follow the steps below.
   - **NOTE**: For a complete description of the P-Tool, refer to ***Appendix B: P-Tool Information***.

   a. Connect the following temporary jumpers on the Micro-6 controller board:
      - TC4 and TC5
      - TC4 and TC6
      - TC11 and FL6-4
   b. Cycle power via the UPS while holding P-Tool **1, 5, 0** (simultaneously) to enter temporary mode.
   c. Press P-Tool **A** to move up. For high speed, press P Tool **B** also.
   d. Press P-Tool **D** to move down. For high speed, press P-Tool **B** also.
   e. You can use the Savaria temporary run buttons (P/N 200438) as normal when in temporary mode.

> **CAUTION**
> Be sure to REMOVE the jumpers from the controller board when no longer running in temporary mode.

3 Pressing P-Tool **A** (for UP) or P-Tool **B** (for DOWN) will rotate the drums in the appropriate direction.

> **CAUTION**
> If the drums move in the direction **OPPOSITE** the arrow, the motor is rotating in the wrong direction! Power OFF the controller and switch the BLUE and BLACK leads in the controller. Then, power ON the controller and start again at the beginning of this section.

4 Pressing and holding P-Tool **B** while pressing either P-Tool **A** or P-Tool **D** will allow the motor to operate at maximum speed.

> **CAUTION**
> Only run the controller for a few seconds to verify rotation.

5 Remove the stretch film from the drums, ensuring you do not damage the ropes.

6 Ensure the rubber boot (P/N FF-0183) used to collect oil drippings is installed at the end of each rope. This rubber boot sits inside the car top safety rail hole as shown below. The boot should be installed about 1" above the top rope nut. If necessary, tighten the clamp at the bottom of the boot to prevent oil leaking.



Figure 119: Rubber boot on elevator rope

7 Maintain tension on the rope ends and lower the rope ends through the car safety rail holes as shown below.

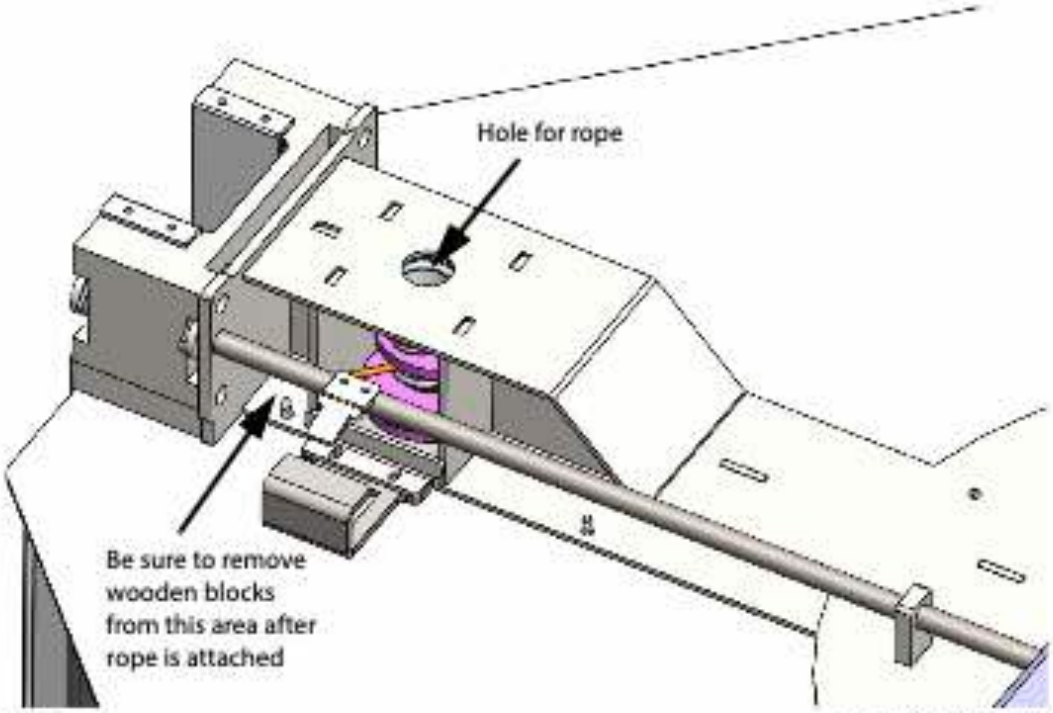

Figure 120: Rope end location

8 Attach the 2 nuts to the **bottom** of the rope ends leaving approximately 1/4" of threads below the nuts.

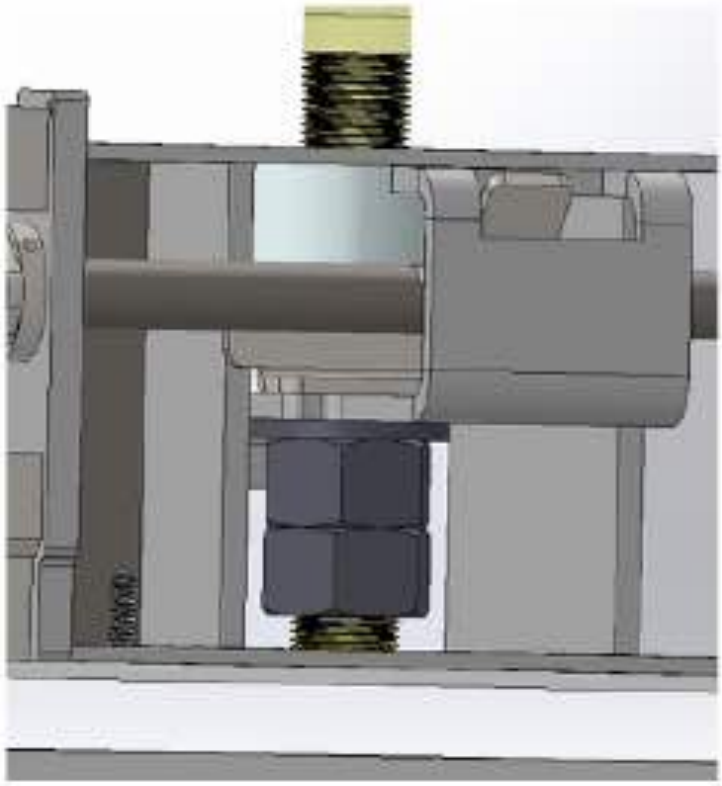

Figure 121: Jam nut placement

9 Press the **A** button on the P-Tool until the car is removed from its safeties.

10 Check the tension of the ropes and adjust the nuts as necessary to maintain even tension between the ropes.

11 Once the ropes are tensioned appropriately, check to make sure the rope ends are not protruding below the cab ceiling weldment.

12 ***If the threaded rope ends protrude past the weldment***, they will require trimming. To trim, mark the distance where the threaded rope end will be contained within the weldment, and the current location of the nut on the threaded rope end with a permanent marker.

   a. Set the car on the LOWEST LANDING (pit or ramp) and ensure a slack rope condition.

   b. Remove the nut from the threaded rope end and the threaded rope end from the weldment.

   c. Place the threaded rope end on a good working surface where there will be no damage, and cut the threaded rope end at the mark where the threaded rope end will be contained within the weldment.

      - **TECH TIP**: Thread a spare nut onto the bar before cutting the end and then unthread the nut. This will help clean out the threads and make it easier to thread the ends on it later. Replace the nut before continuing.

   d. Drill a hole in each of the threaded rope ends 3/16" in diameter for installation of the cotter pin.

   e. Replace the threaded rope ends through the rope end location shown in the illustration on the previous page, using the procedure described above. Secure with the nuts and cotter pins, use the controller to pick up the car, and re-tension the ropes as necessary by adjusting the nuts.

13 ***If the rope ends DO NOT protrude past the weldment***, they will not require trimming.

   a. Secure with the nuts and cotter pins, use the controller to pick up the car, and re-tension the ropes as necessary by adjusting the nuts.

14 Tighten the nut against the lifting plate. This nut provides a "double nut" lock and ensures that the ropes will not rotate.

   - To ensure that the nut is tightened sufficiently, either use a pair of vice-grip pliers and tighten the nut with a crescent wrench or use two crescent wrenches to tighten the nuts against each other.
   - It is important to ensure that the upper nut does not move so that the appropriate rope tension is maintained.

Step 46
Car top and slack rope wiring

***IMPORTANT**: Wiring the car top properly is imperative to maintaining proper operating conditions for the unit. Failure to wire the switch correctly may result in catastrophic failure and damage to the equipment.*

1 The slack rope safety switch is located inside a box that is pre-installed on the cab ceiling weldment as shown below.
   - **NOTE**: The box is slotted for adjustment of the switch as needed.

2 Run the wiring from the slack rope (safety) switch to the car top box.

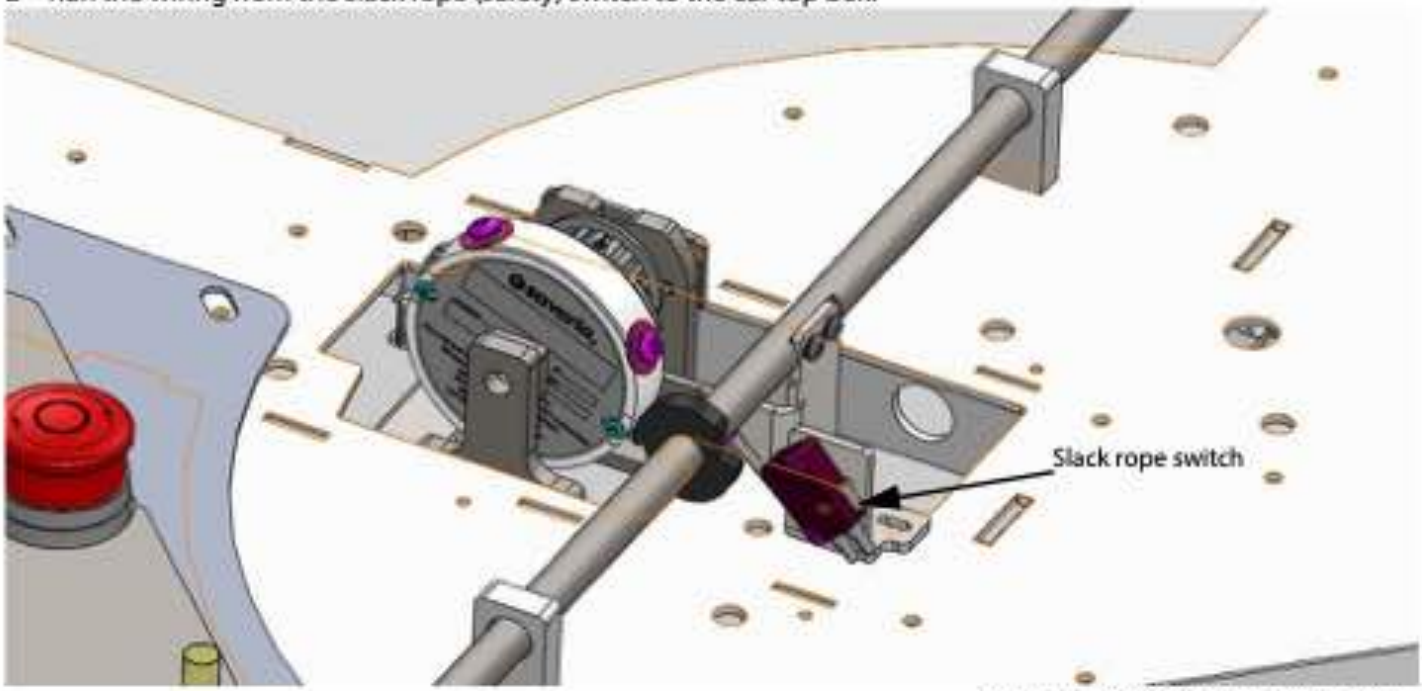

Figure 122: Slack rope switch location

3 The switch is provided with a blue actuator on the side of the switch. For normal operation of the switch, the blue actuator is pulled out (away from the switch body). The slack safety circuit is normally closed, and as the car safety lifter arm actuates downward, engaging the safeties, the slack rope switch will actuate to the OFF position, disengaging the motor.
NOTE: To manually reset the switch, you will need to pull out on the blue tab.



Figure 123: Slack rope switch reset tab

4 Route and feed the wires shown below into the car top box and connect per the Electrical Schematics.

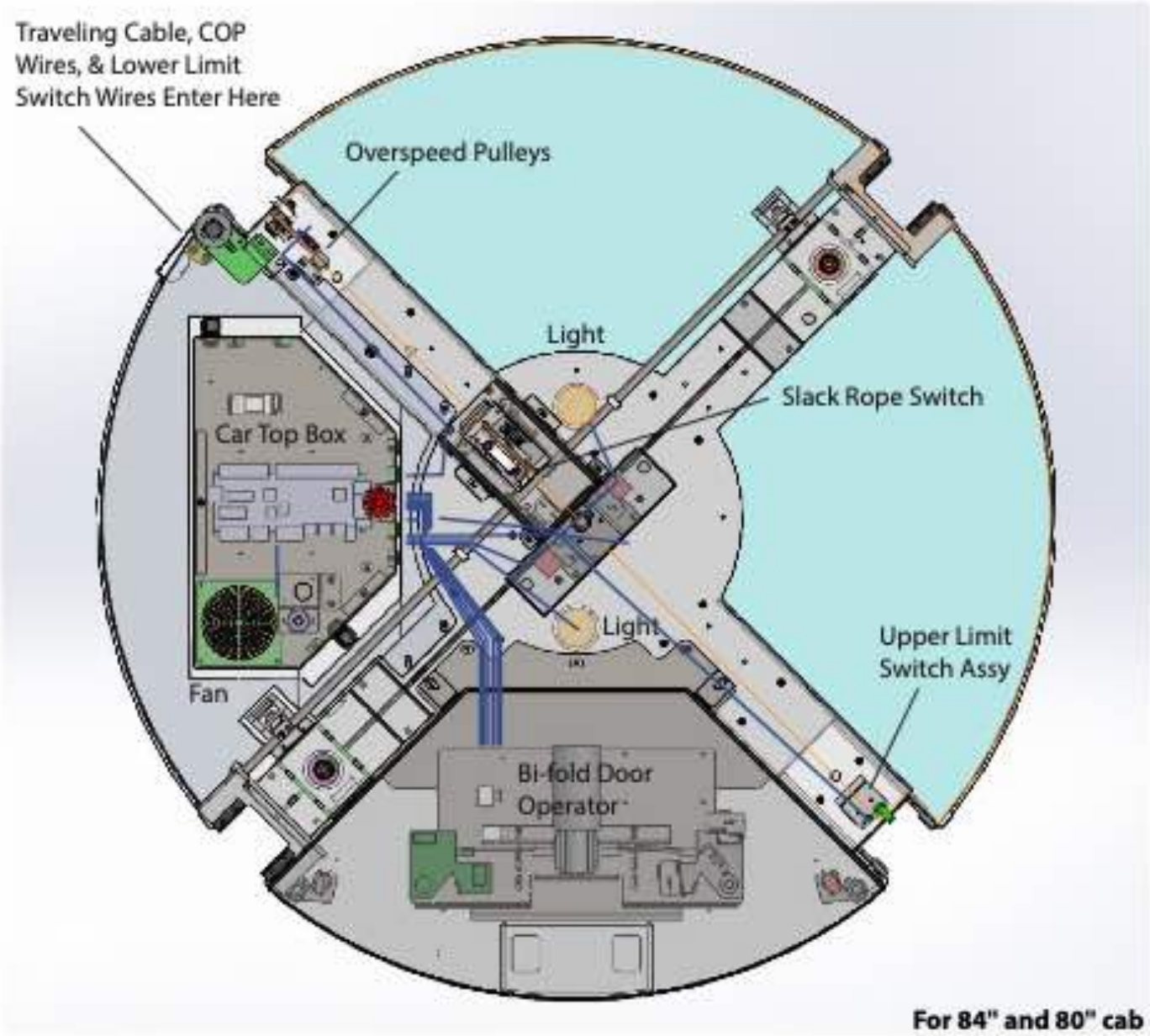

Figure 124: Routing of wires into car top box

5 Install the lid on the car top box.

> **CAUTION**
> Prior to running in Automatic Mode, all safeties must be checked for proper operation.

6 Toggle the slack rope switches and car top stop switch individually and confirm that the controller recognizes the break in the safety chain. If the slack rope and car top stop switches are functioning properly, the P-Tool will display an error to indicate the break in the safety chain.

Step 47
Install hand crank switch

1 Cut two pieces of snap cap base to size so they can be attached above and below the manual lowering hole (as shown below). Note that the size of the pieces will depend on the height of the header.
2 Drill a 1/2" hole, centered in the top piece of snap cap base, for installation of the hand crank switch.
3 Install the black plunger switch through the 1/2" hole in the snap cap base, securing it in place with a nut at the front and back.
4 Drill a 3/4" hole in the rail tube (so it will line up with the plunger switch in the snap cap base). This will allow for recess of the hand crank switch into the rail.
5 Secure the snap cap base pieces to the rail using self-tapping screws (see below).



Figure 125:

6 Using the 2-conductor 20 AWG wire provided, route the wires to the upper final limit.
7 Connect the wires to the switch per the Electrical Schematics provided.
8 Cut a piece of snap cap to match the others on the header.
9 Later, when installing the snap cap, the snap cap will be placed over the switch and hole (as shown below) **ensuring that the plunger switch is always pressed in when the snap cap is in place.**



Figure 126:

LANDING POSITIONS

Step 48
Set landing (floor) positions

Before Setting landing positions, verify IN1 and IN2 signals are working correctly. To do so;

1 Make sure all temporary jumper wires are removed and all safety circuit lights are on (MSC GC HDC HDL LT UT). If not, check appropriate switches/locks.
2 Place the controller in temp mode using p tool.
3 Bring the car level with bottom floor and ensure IN2 is lit on encoder board. If not, adjust magnet.
4 Bring the car down until LT light goes out on main board.
5 Verify IN1 is now lit on encoder board. Ensure IN2 is also lit.
6 Bring the car back to floor level and ensure IN1 is out and IN2 is still lit.
7 Run the car up 1"-2" and ensure IN2 is now out.
8 Proceed to setting landing positions procedure.

Place unit in temporary mode

To set the landing positions, the unit must be in **Temporary Mode**.
To do this, connect one P-Tool to connector J1 on the Micro-6 controller board and follow the steps below.

- **NOTE**: For a complete description of the P-Tool, refer to ***Appendix B: P-Tool Information***.

1 Cycle power via the UPS while holding P-Tool **1, 5, 0** (simultaneously) to enter temporary mode.
2 Press P-Tool **A** to move up. For high speed, press P-Tool **B** also.
3 Press P-Tool **D** to move down. For high speed, press P-Tool **B** also.
4 You can use the Savaria temporary run buttons (P/N 200438) as normal when in temporary mode.

> **CAUTION**
> Be sure to REMOVE the jumpers from the controller board when no longer running in temporary mode.

Connect second P-Tool to program landing (floor) positions

1 Connect a second P-Tool to the EC1 encoder board connector SCTOOL.
   - **NOTE**: If you only have one P-Tool, you can run the floors with TEMP RUN buttons and use the P-Tool on the encoder board.
2 Plug in the 2-pin power connector (black and red wires) on the EC1 encoder board.
   - **NOTE**: The EC1 encoder board is mounted on the inside left panel of the controller box as shown below.
3 Once the unit is in temporary mode and the second P-Tool is connected, you can program the floors as described in the following procedure.

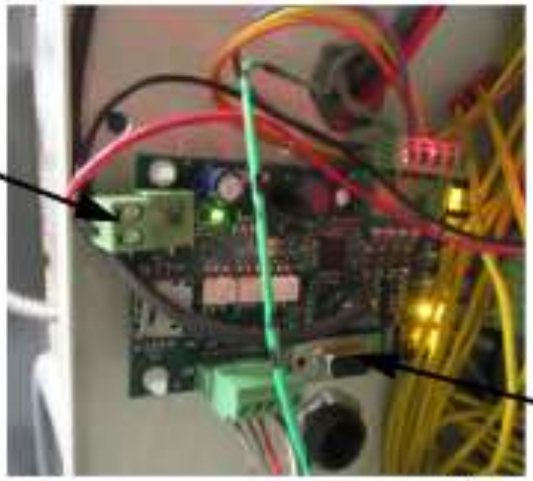

Figure 127: EC1 encoder board in controller box

Setting # of Floors (FL-3)

When the P-Tool is plugged into the EC1 encoder board, the following home screen is displayed.

To begin using the EC1, all that is required is to set the number of floors of the job.



Figure 128: Home screen

1 Select FL by pressing "3".
   - You will then be prompted to enter the # of floors.
   - Select the # of floors and then press "#".



Figure 129: Number of floors

Learning (LRN-4)

This is the process to store each landing position into the EC1.

> **NOTICE**
> Prior to selecting "4" from the home screen, the elevator should be placed into **Temporary Mode** using a second P-Tool plugged into connector J1 on the Micro-6 controller board, and moved approximately 10 inches above the bottom landing.

1 Select LEARN by pressing "4".
   - You will then be prompted to enter a password.
   - Enter "24865" and then press "#".



Figure 130: Enter password

2 Not activating the IN2 switch.
   - You will be prompted to place the elevator where the IN2 switch is not yet activated. Move the elevator 10" above the bottom landing by pressing "A" or "D" on the P-Tool connected to the Micro-6 controller board.
   - Press "#" on the EC1 P-tool to continue.



Figure 131: IN2 switch off

3 IN1 and IN2 are both activated.
   - Move the elevator down by pressing "D" on the P-Tool connected to the Micro-6 controller board.
   - Continue pressing until the unit reaches the lower terminal limit (LTL or IN1) switch and then release.
   - Press "#" on the EC1 P-tool to continue.



Figure 132: IN1 and IN2 switches both activated

4 Set the Floor 1 position.
- Move the elevator up by pressing "A" on the P-Tool connected to the Micro-6 controller board.
- Continue pressing "A" until the cab is level with the landing. If you overshoot, you can move back down by pressing "D", or if very close, by performing an adjust in the next task.
- Press "#" to continue.



Figure 133: Floor 1 position

5 Set the Floor 2 position.
- Move the elevator up again by pressing "A" on the P-Tool connected to the Micro-6 controller board.
- Continue pressing "A" until the cab is level with the landing. If you overshoot, you can move back down by pressing "D", or if very close, by performing an adjust in the next task.
- Press "#" to continue.

6 Repeat for the remaining floors as applicable.



Figure 134: Floor 2 position

7 Reset the lift.
- Once the last floor position is set, and you press "#", you will be prompted to reset the lift by cycling the power. This can be achieved by simply turning the UPS off and then on again.

> **IMPORTANT**
> Resetting the lift by cycling the power will return the lift to AUTOMATIC operation. Allow the lift to fully reset on its own



Figure 135: Reset lift

Adjusting (COR-5)

This process allows you to alter the stored value for each landing (floor) position from 0.1 to 0.9 inches, either above or below the current learned position.

1 Select COR by pressing "5".
- You will be prompted to enter a password.
- Enter "24865" and then press "#".



Figure 136: Enter password

2 Select which floor to adjust.
- Press which floor number you would like to adjust. If you didn't intend to adjust a floor, press "#" to exit.



Figure 137: Adjust floor

3 Select whether to adjust up or down.
- Select whether you would like to adjust the floor position up or down from its current location.
- Press "1" to adjust it up.
- Press "0" to adjust it down.
- Press "#" to confirm your selection.



Figure 138: Adjust up or down

4 Select how much to adjust the floor position.
   - Enter the value (0.1 to 0.9 inches) to adjust the floor position.
   - Press "#" to confirm your selection.
   - Upon pressing "#", you will be returned to the home screen.



Figure 139: Adjustment measurement

Status (STA-1)

This selection shows the status of the outputs on the EC1 board and the count being generated by the motor encoder.

1 Select STA by pressing "1".
   - You will then see the status of the EC1 outputs (P1, P2, P3, DZ, LD and LU) - connector J7 on the EC1 board.
   - A "0" indicates the output is OFF and a "1" indicates the output is ON.
   - The digits shown on the second line (bottom right) will update up or down showing that the motor encoder is turning as the motor spins.
2 Upon pressing "A", you will be returned to the Home screen.



Figure 140: Status screen

CAB FINISHING

Step 49
Attach cab handrails

There is a handrail provided for each of the three cab walls. The cab rails come with laser pierced holes that you can use to drill/tap to 8/32 for mounting of the handrail. Attach the handrails to the cab rails as shown below using the hardware provided in the Handrail Fastener Bag of kit PK-0016.





Figure 141: Cab handrails

Step 50
Install guide shoes

1 Remove the four thin guide shoes from the inside faces of the two cab rails opposite the lowest level hoistway door (as shown below).
2 Install the four new thicker guide shoes in their place using the existing hardware.

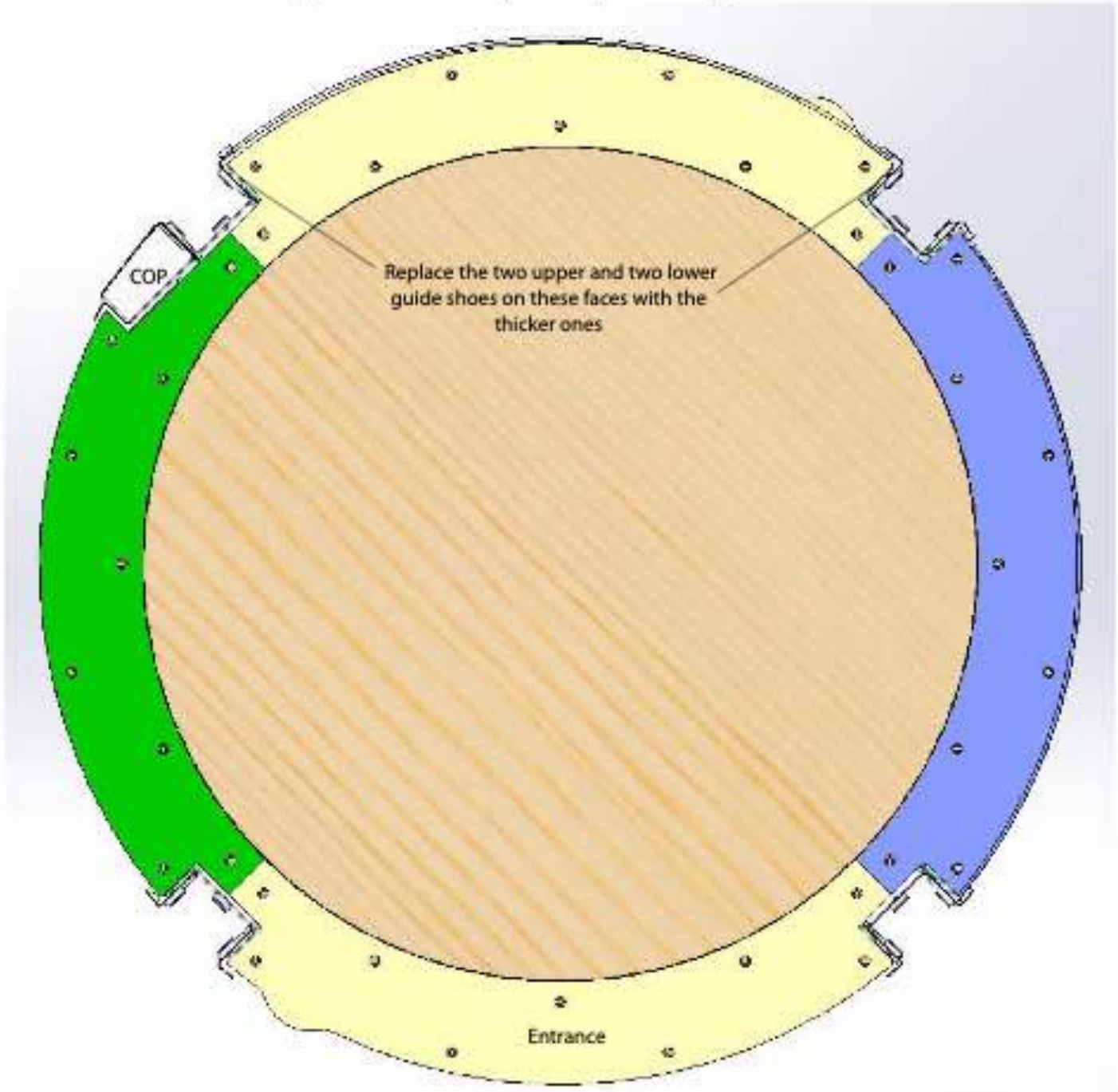

Figure 142: Guide shoe installation (Type-1 Car shown)

GLAZING

Step 51
Glazing introduction

Glazing the Vuelift is a process which, when performed correctly, can be executed quickly and efficiently.
The glazing system is comprised of three separate components:

- Panels and doors
- Snap cap base, gasket and cover
- Fasteners and brackets

A cross-sectional view of the snap cap system is shown below. This will help clarify terminology throughout this section.

The snap cap comes in two different lengths from the factory:

- 7-ft sections are to be used between the floor ring and the header ring on every level
- 4-ft sections which will be cut to fit above the header ring and below the next ring (i.e. balcony ring or ceiling ring)

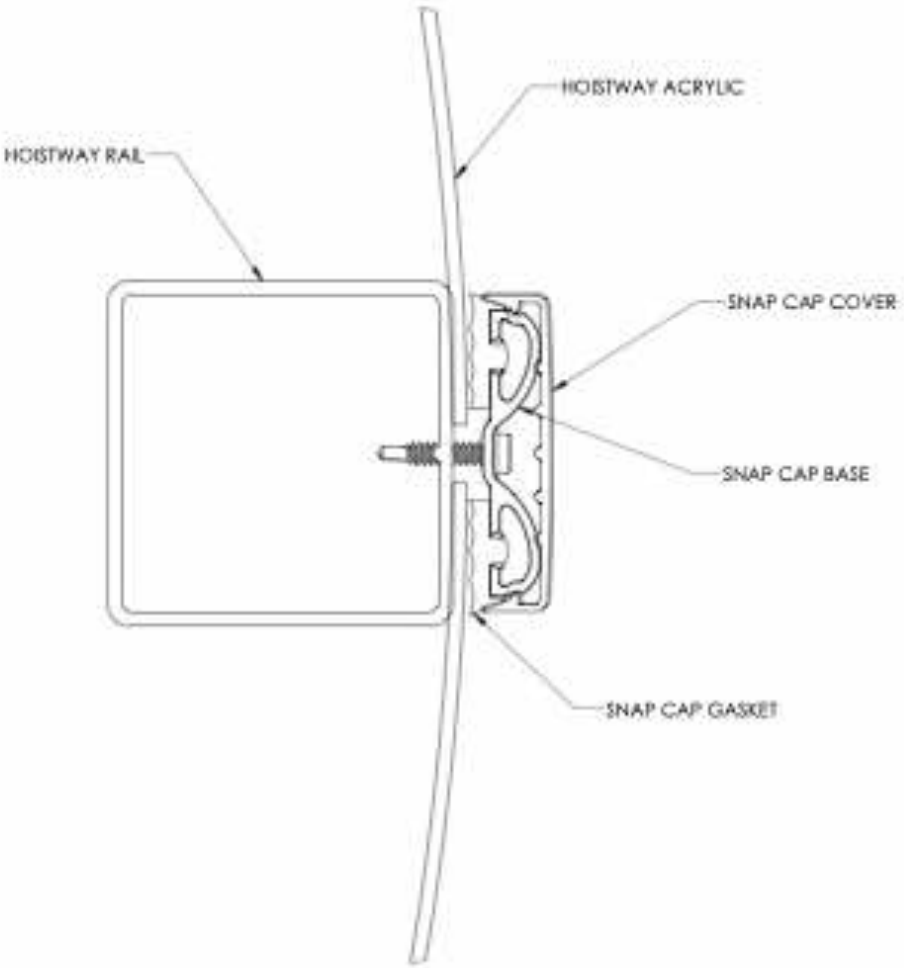

Figure 143: Snap cap system, cross-sectional view

Types of panels

There are six different types of panels used in the Vuelift glazing system (shown below):

- Cab fixed panel
- Cab fixed panel for COP
- Lower hoistway fixed panel - note the notch orientation. The notch should be offset to the BOTTOM of the panel.
- Upper hoistway fixed panel (black and clear)
- Hoistway door
- Cab doors

NOTE: Panels shown below are for the ROUND unit only.

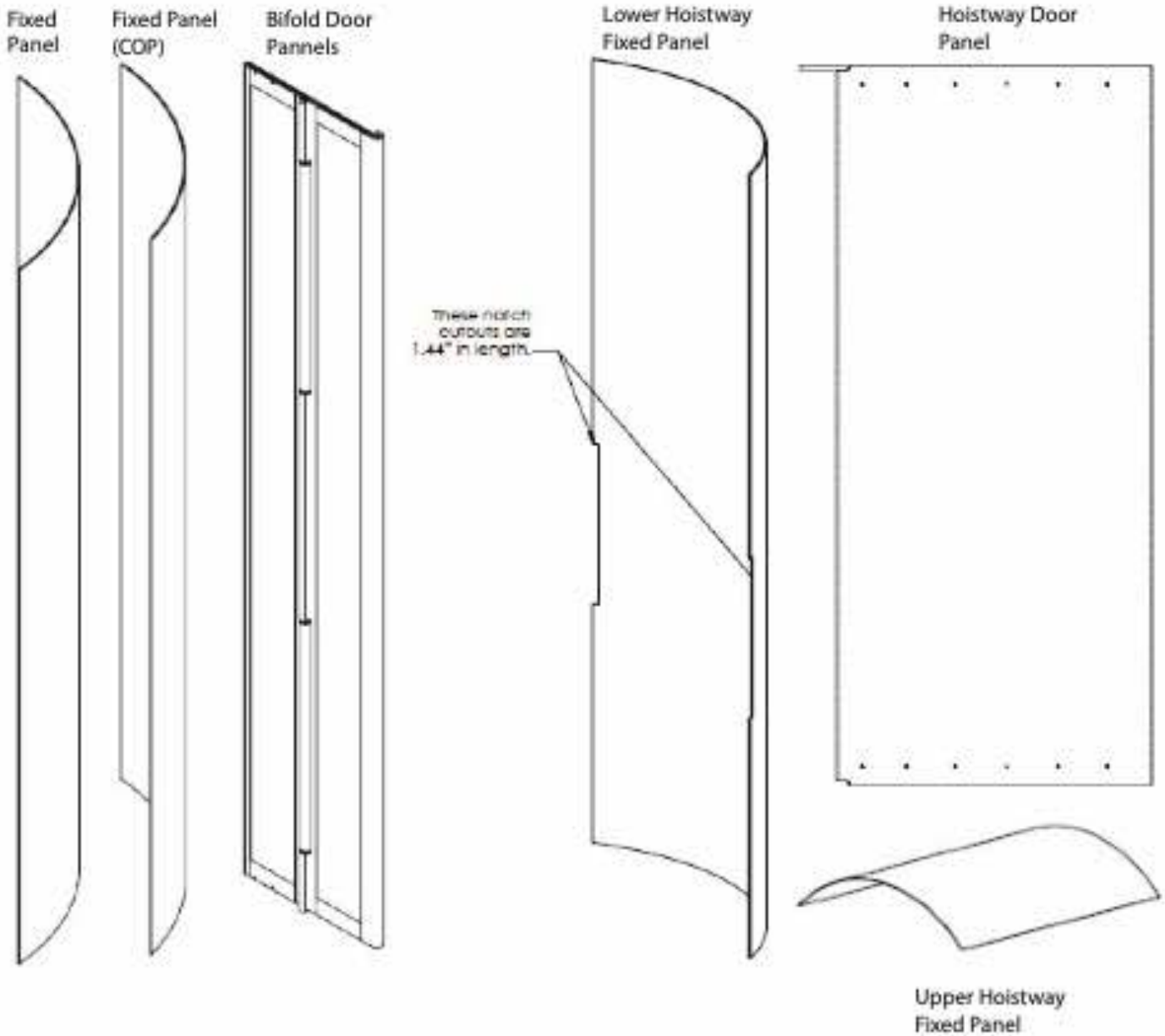

Figure 144: Panel types (shown for ROUND unit only)

Order of panel installation

We recommend a "top down" approach to glazing.

- This approach involves installing the glazing from the upper-most floor first and cleaning the elevator as you work your way down.
- This will expedite the process of cleaning prior to leaving the job and turning the elevator over to the customer.

The next few sections outline methods for cutting the acrylic panels to fit, installation of the acrylic panels and doors, and installation of trim pieces and covers.

The general glazing installation procedure is as follows:

1 For **ALL** landings:
   - Assemble snap cap (cut base to length, attach gasket, and stage near corresponding landing).

2 Starting at the **TOP** landing and working towards the bottom landing:
   - Install upper hoistway fixed panels (measure, cut, install)
   - Install mid-floor hoistway panels, if applicable (measure, cut, install)
   - Install hoistway doors (including hardware)
   - Install lower hoistway fixed panels (measure, cut, install)

3 On the **BOTTOM** landing:
   - Install upper hoistway fixed panels (measure, cut, install)
   - Install mid-floor hoistway panels, if applicable (measure, cut, install)
   - Install hoistway doors (including hardware)
   - Install cab fixed panels (measure, cut, install)
   - Install lower hoistway fixed panels (measure, cut, install)
   - Install cab doors (including hardware)

4 For **ALL** landings:
   - Install snap cap cover (measure, cut, install)

The following sections cover these methods in detail.

Step 52

Assemble snap cap

Prior to installing the hoistway acrylic panels, the snap cap base must be cut to length and prepared for installation. This includes adding the snap cap gasket to the snap cap base and drilling any necessary clearance holes in the 4-ft snap cap base sections.

The length of the snap cap base for the upper hoistway fixed panels is determined by measuring the distance between the header ring and the ceiling ring, or balcony ring (depending on the configuration).

The illustration on the next page shows the distance to measure for the snap cap base.

For the top floor, the snap cap base should be cut to a length of 1/4" less than the distance from the header ring to the ceiling ring, or balcony ring (as appropriate).

The lower hoistway fixed panel snap cap base (7-ft long) is pre-cut to length at the factory.

NOTICE

It is important that the proper snap cap base sections are attached at the appropriate floor. Write the floor level on the snap cap base after cutting; this will ensure proper fit.

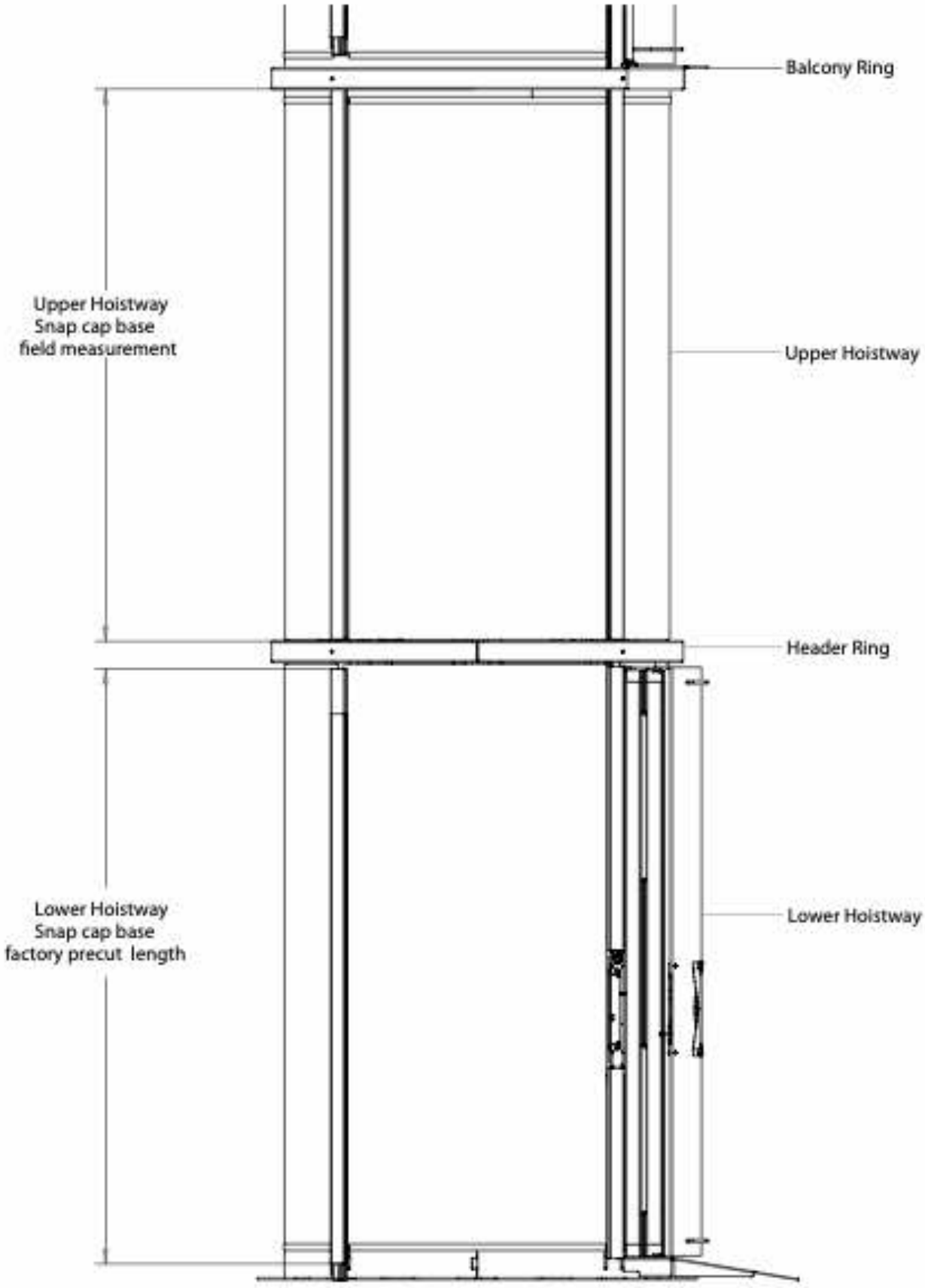

Figure 145: Snap cap base measurements

1 Using a miter saw with a non-ferrous metal cutting blade, cut the snap cap base to length for all levels.

2 All door openings are provided with hoistway door snap cap gasket. The hoistway door snap cap gasket is substantially **THICKER** than the standard snap cap gasket. The snap cap base on both sides of every hoistway door should be installed with one piece of hoistway door snap cap gasket. Proper installation of the hoistway door snap cap gasket is shown below.

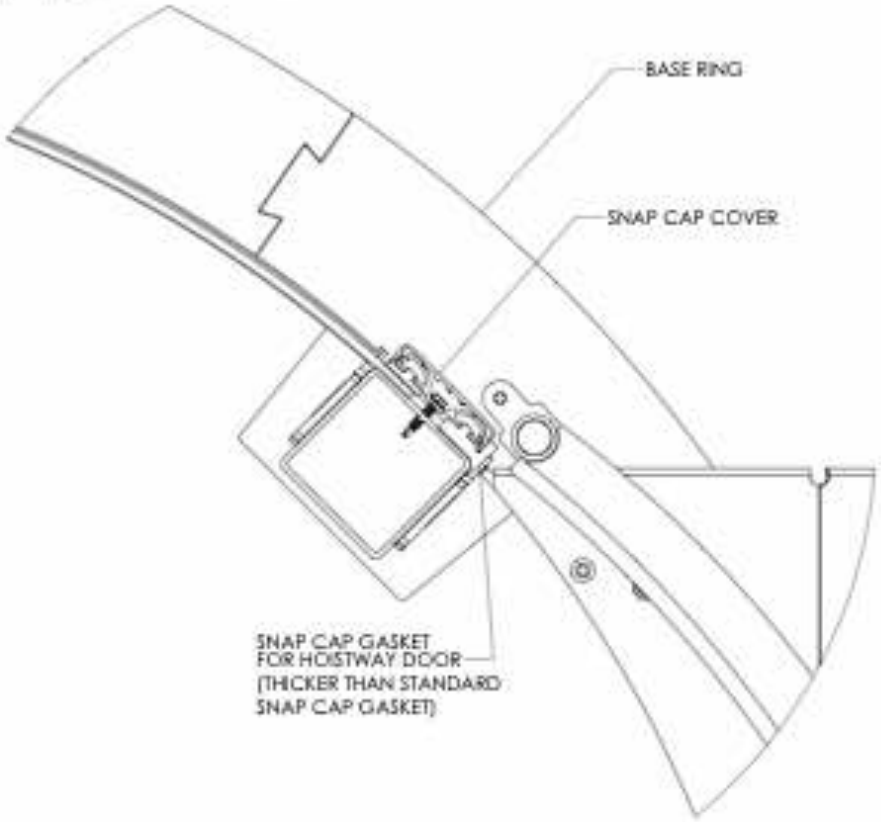

Figure 146: Hoistway door snap cap gasket

3 Attach the snap cap gasket to the snap cap base. The illustration below shows the proper orientation of the snap cap gasket. Note that the **thicker** side is oriented to the outside of the snap cap base. Press the snap cap gasket into the snap cap base until fully seated.



NOTE: Use the thicker gasket on the hinge side and strike side of the door.

Figure 147: Snap cap gasket in snap cap base

4 Trim any excess gasket and repeat for all sections of snap cap base, including the long sections.

5 Drill clearance holes for the self-drilling/self-tapping screws used to attach the snap cap base to the hoistway rails. For the shorter sections, two holes are required. For the long (7-ft) sections, four holes are required.

6 Drill out a 1/2" access hole on the snap cap base where the hand crank (motor access door) switch is located.

Step 53
Install upper hoistway fixed panels

The upper hoistway fixed panels for the Vuelift glazing system are designed to be field trimmed to the appropriate length. Panels come standard at 47 1/2" in height.

***IMPORTANT**: When trimming the panels, care must be taken not to damage or crack the panels. While the impact resistance of the Vuelift glazing system is durable, the material prior to installation is brittle.*

1 To trim the panels, use a flush trim router (Roto-Zip® type tool). The preferred method is with a flush-trim router with flush trim bit as it provides the easiest and cleanest finished edge.

2 For **EACH** floor (landing), you need to measure the distance between the header ring and the ceiling ring, or balcony ring (depending on the configuration). The distance to measure for a balcony configuration is shown below.

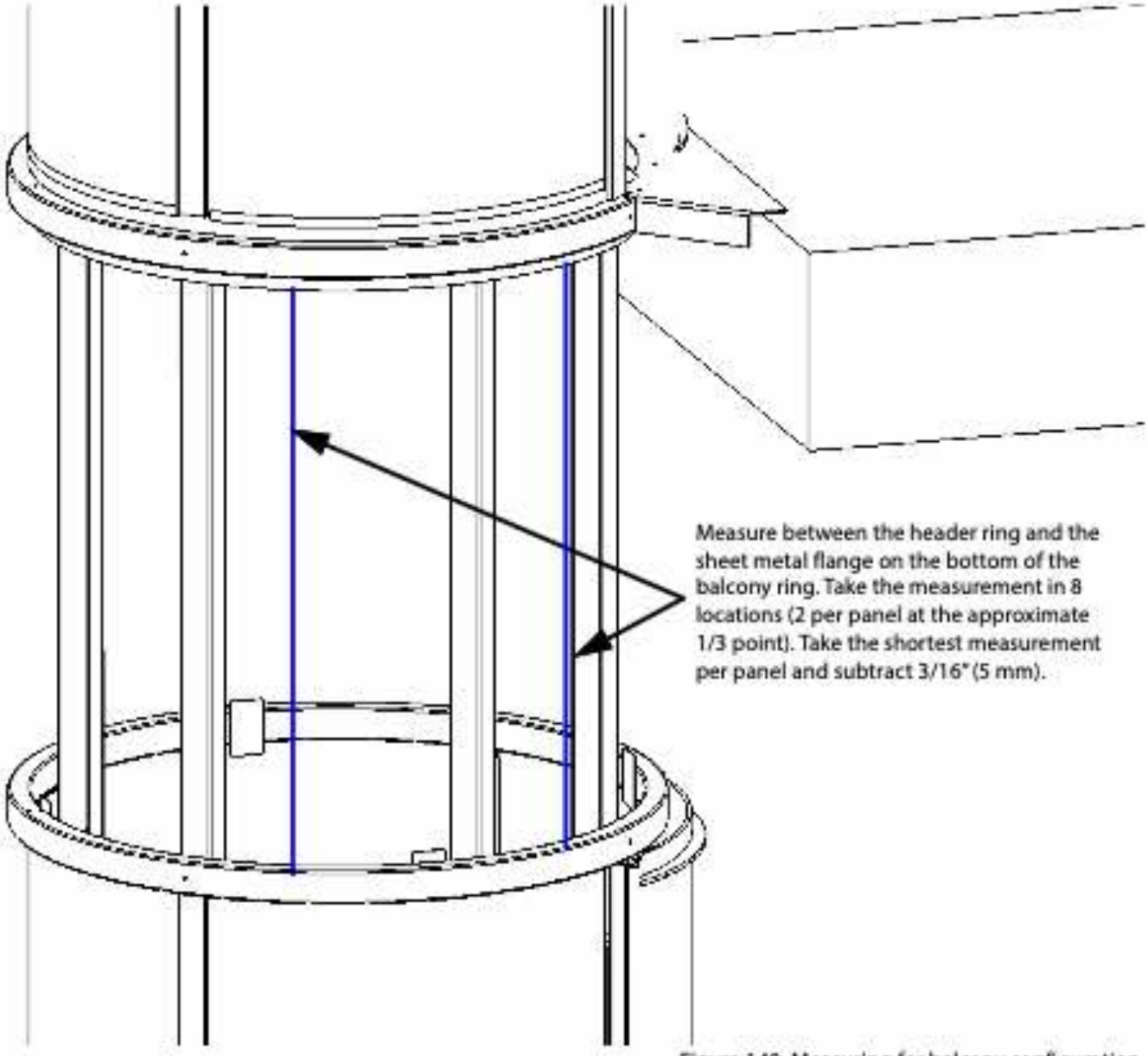

Figure 148: Measuring for balcony configuration

3 Take the measurement in eight different locations as shown below. This will ensure the panels fit correctly and will account for any variations in ceiling height around the elevator.

- For each panel location, take the **shortest** measurement and subtract 3/16" (5 mm). THIS IS THE LENGTH TO WHICH YOU WILL CUT THE PANEL.

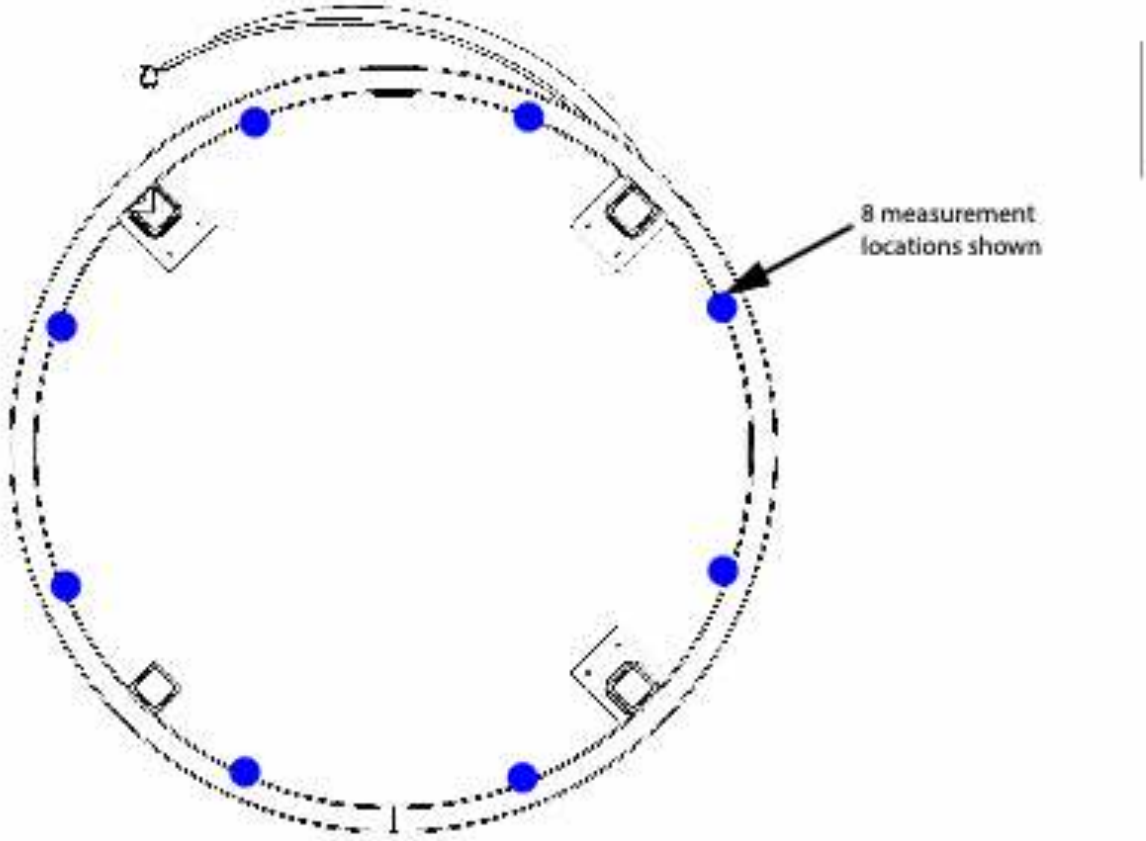

Figure 149: Measurement locations for upper hoistway fixed panels

4 Cut all upper hoistway fixed panels for **ALL** floors (landings) prior to installing the first panel. This will minimize the amount of mess and damage which could occur from changing operations frequently.
   - The **BLACK** upper hoistway fixed panels are intended to be installed around the head assembly and drive train, and to cover the joist space on all thru-floor applications. **NOTE**: Be sure to notch out both panels at the appropriate location to allow for insertion of the manual lowering wheel (see below).
   - The **CLEAR** upper hoistway fixed panels are intended to be installed above the header ring on all remaining levels.



Figure 150: Black upper hoistway fixed panels - notches for manual lowering wheel

5 After cutting the upper hoistway fixed panels to length, cut the H-channel sections to length and then attach them to the sheet metal flange on the ceiling ring or balcony ring, as appropriate.
6 Insert the cut end of the upper hoistway fixed panel into the H-channel, then insert a door shim between the header ring and the bottom of the upper hoistway fixed panel to ensure it does not become dislodged.
7 Repeat this process for the remaining upper hoistway fixed panels on this level.
8 Ensure the panels are centered in their openings. The panel should overhang the hoistway rail by approximately 1" on each side. This will leave 1" of exposed rail between the panels.
9 Attach the snap cap base to the rail using the enclosed self-drilling/self-tapping screws.

> **NOTICE**
>
> The snap cap base does not need to be tightened to excess. The base should be tight enough to ensure that the panels do not vibrate loose or rattle.

10 Verify that the snap cap base has the gasket facing the hoistway rail, that the base and gasket are centered on the rail, and that no screw will penetrate the upper hoistway fixed panel.
11 Repeat this process for the remaining three pieces of snap cap base on this level.

Step 54
Install mid-floor hoistway panels- (thru-floor configuration only)

The mid-floor hoistway panels for the Vuelift glazing system are designed to be field trimmed to the appropriate length. Panels come standard at 47 1/2" in height.

***IMPORTANT**: When trimming the panels, care must be taken not to damage or crack the panels. While the impact resistance of the Vuelift glazing system is durable, the material prior to installation is brittle.*

1 To trim the panels, use a flush trim router (Roto-Zip® type tool). The preferred method is with a flush-trim router with flush trim bit as it provides the easiest and cleanest finished edge.

2 For **EACH** floor (landing), you need to measure the distance between the mid-floor ring and the ceiling ring. The distance to measure is shown in Figure 151.

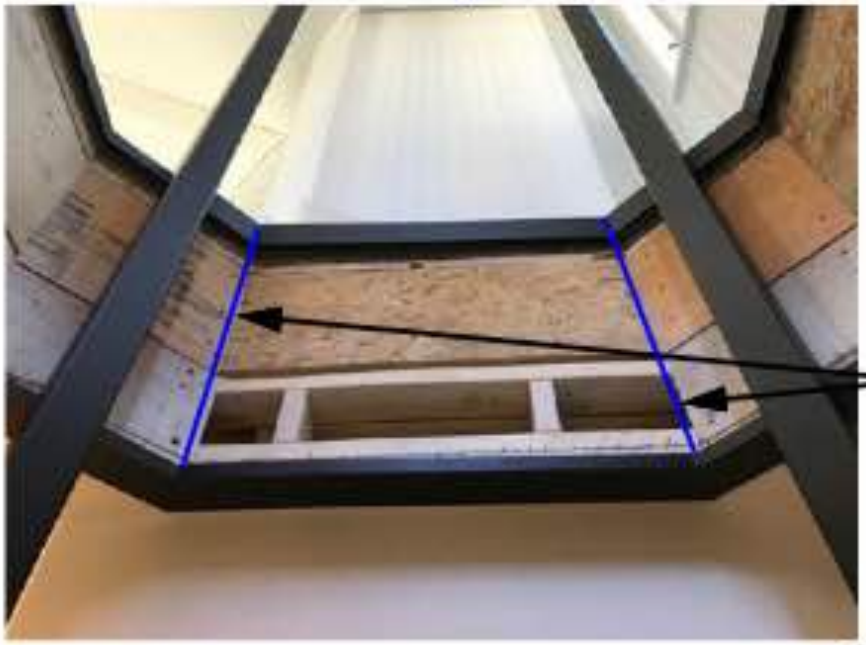

Measure between the mid-floor ring and ceiling ring. Take the measurement in 8 locations (2 per panel at the approximate 1/3 point). Take the shortest measurement per panel and subtract 3/16" (5 mm).

Figure 151:Measuring for thru-floor configuration

3 Take the measurement in eight different locations as shown previously in Figure 149 on page 123. This will ensure the panels fit correctly and will account for any variations in ceiling height around the elevator.
   - For each panel location, take the **shortest** measurement and subtract 3/16" (5 mm). THIS IS THE LENGTHTO WHICH YOU WILL CUT THE PANEL.

4 Cut the allotted black acrylic panels to length.

5 Attach the provided thin gauge metal strips onto the mid-floor ring by using the 1/8" rivets as shown in Figure 152.



Figure 152: Mid-floor trim strips attached

6 Insert the cut end of the mid-floor hoistway panels behind the ceiling ring flange and align the top with the mid-floor ring.

7 Carefully drill through the top of the acrylic and the metal trim and attach the two together using the provided 1/8" rivets.



Figure 153: Acrylic aligned and riveted in place

8 Repeat this process for the remaining mid-floor panels on this level.



Figure 154: Mid-floor acrylic panels fully installed

Step 55
Install lower hoistway fixed panels

Lower hoistway fixed panel installation is designed to be completed quickly and efficiently. All lower hoistway fixed panels are identical in size and shape.

1 Install a section of H-channel on the sheet metal portion of the balcony or thru-floor ring (depending on the configuration).

2 Place the lower hoistway fixed panel into the H-channel, ensuring that the notches in the panel are oriented to the **bottom half of center** as shown below, and that the panel is centered on the hoistway rails.

- For the EMI rail, the panel should be approximately1/8" away from the edge of the EMI to allow for access to the EMI (interlock).

3 Repeat this process for the remaining lower hoistway fixed panels on this level.

4 Install the snap cap base to the rail using the enclosed self-drilling/self-tapping screws.

5 Verify that the snap cap base has the gasket facing the hoistway rail, that the base and gasket are centered on the rail, and that no screw will penetrate the lower hoistway fixed panel.

6 Repeat this process for the remaining three pieces of snap cap base on this level.

7 Ensure that the hoistway door snap cap gasket is facing the **jamb** for both sections of snap cap base.

IMPORTANT

Do **NOT** install the lower hoistway fixed panels on the first floor until the cab fixed panels are installed. This will allow for easier cleaning of the cab panel exterior.

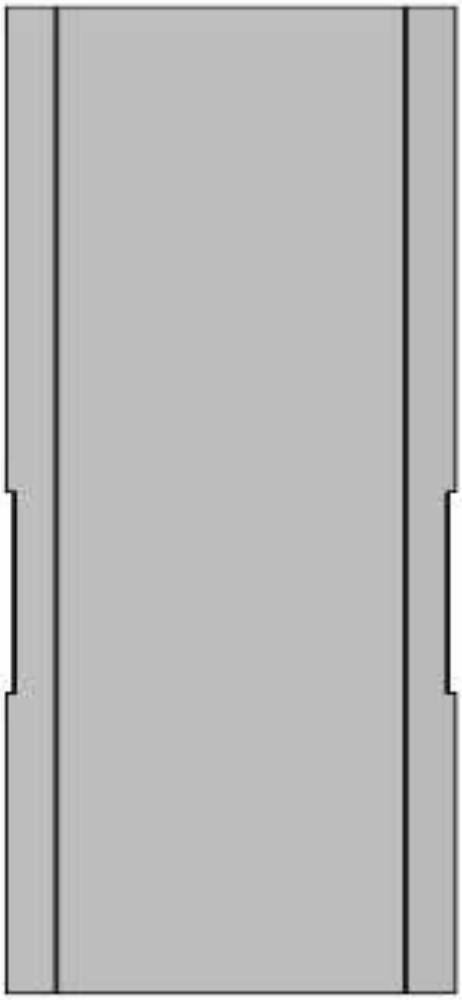

Figure 155: Lower hoistway fixed panel notch orientation

Step 56
Install hoistway doors

Vuelift products include hoistway doors which are symmetrical about the horizontal axis. This allows for field adjustable handing selection.

1 To install the hoistway door, attach the lower hinge assembly to the floor ring at the current level using the 1/4"-20 x 3/4" button head screws provided (see below).

> **NOTICE**
>
> If a base ring is used, there is an extension, as shown at the left.
>
> Rubbing can occur if installed too far to the left. Ensure the assembly is installed as far right as the play allows.



Figure 156: Lower hinge assembly

2 Insert the upper hinge assembly into the top of the hoistway door hinge bar (see below).

3 Set the hoistway door on the lower hinge assembly and attach the upper hinge assembly to the header ring using (2) 1/4"-20 x 3/4" button head screws as shown below.

> **CAUTION**
>
> The upper hinge assembly is asymmetrical and may require adjustment to ensure that it is properly installed.
> Figure 155 shows the proper orientation of the upper hinge assembly relative to the hoistway door jamb. Failure to properly orient the upper hinge assembly may result in damaged components.



Figure 157: Orientation of upper hinge assembly

4 Ensure the hoistway door is properly aligned.
- The strike side of the hoistway door should interact with the inside edge of the hoistway door snap cap gasket.
- Proper alignment of the hoistway door will prevent alignment problems when attaching the hoistway door strike plate and EMI (interlock) beak.

5 Attach the EMI interlock beak (301825) to the hoistway door strike plate using the 2 enclosed 8-32 x 1/4" flat head screws.

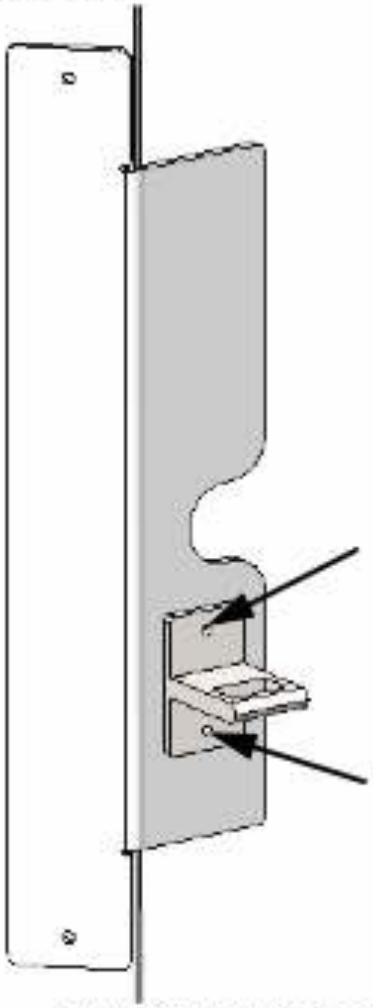

Figure 158: Attach beak to strike plate

6 Attach the hoistway door strike plate to the hoistway door by aligning the beak with the EMI (interlock).

7 Mark the location of the strike plate mount holes on the hoistway door.

8 Drill a 3/16" clearance hole through the hoistway door.

> **NOTICE**
>
> When drilling through acrylic, it is advised to place a scrap of wood on the side of the panel opposite the drill bit so that when the drill bit goes through the panel it does not chip or crack the acrylic.

9 Mount the hoistway door strike plate to the hoistway door using the two 10-24 x 1/2" button head screws.

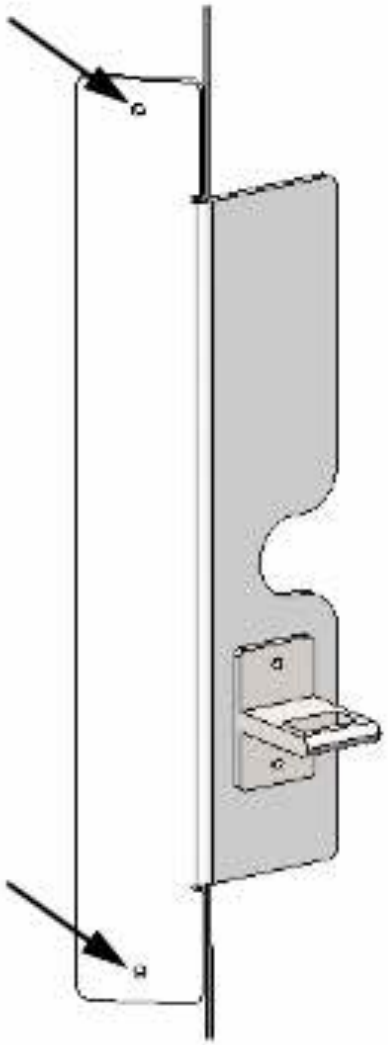

Figure 159: Attach strike plate to hoistway door

10 Install the hoistway door handles by measuring a point 6" from the strike side of the hoistway door panel and 42" above the current floor.

11 Drill a 3/16" clearance hole through the hoistway door.

> **NOTICE**
>
> When drilling through acrylic, it is advised to place a scrap of wood on the side of the panel opposite the drill bit so that when the drill bit goes through the panel it does not chip or crack the acrylic.

12 Using the hoistway door handle, identify the proper location of the lower hole on the hoistway door handle.

13 Mark the hole and drill a 3/16" clearance hole through the hoistway door.

14 Attach the hoistway door handles together (one on the inside and one on the outside) using the enclosed 8-32 x 2-1/4" stainless steel button head screws. Note that the inside handle has the screws holes.

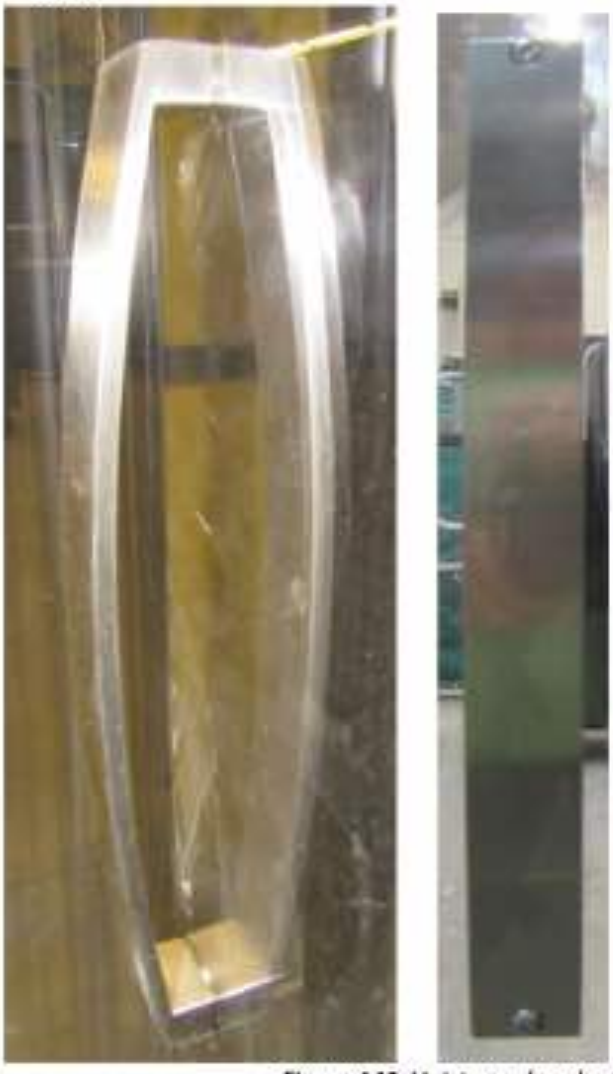

Figure 160: Hoistway door handles

Step 57
Install cab fixed panels

The Vuelift cab fixed panels are designed to be installed in less than 20 minutes. The current design uses a specifically designed Velcro to ensure maximum strength and bonding capabilities between the cab rails and the acrylic panels.

The Velcro used in Vuelift elevators has a known thickness when affixed. This ensures the installer can identify properly seated panels.

1 Attach the Velcro strips to the **sides** of the cab panels. An example is shown below.
   - The Velcro should be flush with the edge of the panel along the long edge.
   - If the Velcro overhangs the panel at the end, trim the Velcro with a utility knife while ensuring that you do not scratch or cut the panel itself.



Figure 161: Attach Velcro strips to cab panel

2 To install the cab panel, place a spacer (generally a small piece of cardboard) in two places on the cab floor, as shown below.

3 Place the cab fixed panel on the cardboard or other spacer and proceed to affix one side of the panel. Ensure that the panel is parallel to the hoistway rail. There should be 1/4" gap between the edge of the cab fixed panel and the edge of the cab rail.

4 Carefully flex the panel in the center to allow the edge of the panel to clear the opposing cab rail and affix the panel to the cab rail.

> **NOTICE**
>
> The force required to attach the Velcro is quite high. When properly seated, the Velcro will make a snapping sound as the pieces attach to one another.
>
> The Velcro should have a uniform thickness when viewed from outside the cab. Note that it requires a large amount of force to attach the Velcro. Ensure you have seated the entire length of Velcro on each side of the cab fixed panel.

5 Drill a hole at the top and bottom on BOTH sides of each panel to accommodate 1/8" rivets. Rivet the panel in place (4 rivets per panel, 2 per side).
   - **IMPORTANT**: Be EXTREMELY CAREFUL not to crack the panels.

6 Repeat the above process for the two remaining cab fixed panels.



Figure 162: Spacers for cab panel installation

Step 58
Install bi-fold cab doors and gate switches

The bi-fold cab doors are installed into an upper and lower door track.

NOTE: Alignment of the door tracks is important to ensure successful operation of the cab door. The upper door track should be mounted directly above the lower door track through the provided holes to ensure proper operation.

1 Install the cab door bottom hinge pin assemblies, one at each side (right bottom hinge pin assembly is shown below).

- There are 5 pieces to the assembly - the wide pin piece that goes into the floor, a washer, a bearing, another washer and then the top narrow pin piece. Note that you may need to make the hole in the floor bigger so the bottom piece will fit.

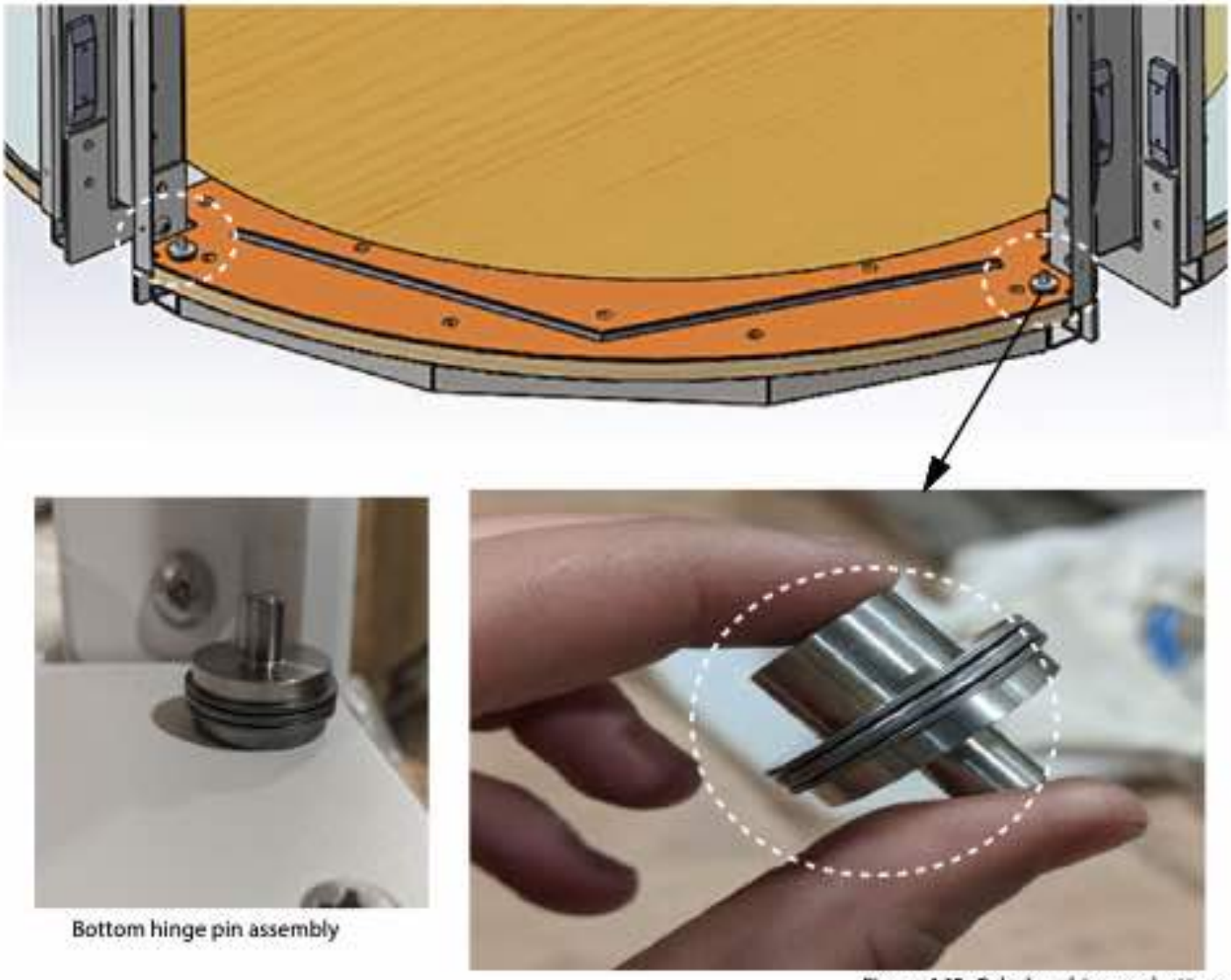

Bottom hinge pin assembly

Figure 163: Cab door hinges - bottom

2 Before installing the upper door track(s), tap the pre-drilled holes on the ceiling using an 8/32" tap.

3 Attach the upper door track (s) using the screws provided; there is one long door track for an octagonal elevator and two short door tracks for a round elevator (round shown below).

4 Install the rubber stoppers in the track with the hardware provided 1" inward from the outermost screw holding the track.

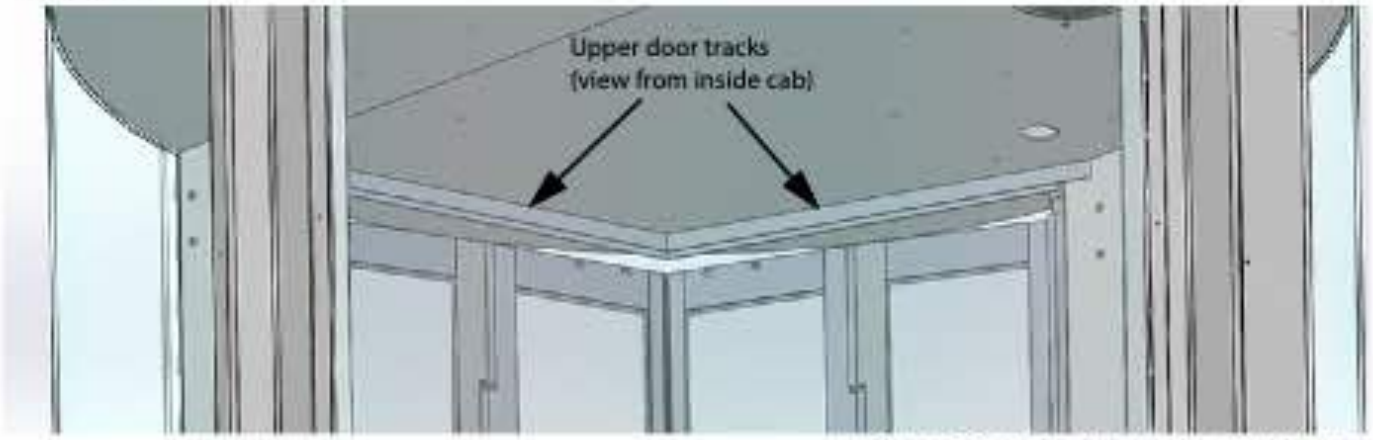

Figure 164: Upper door tracks - round elevator

5 Place the door on the bottom hinge pin and then insert the top door pin through the hole in the ceiling as shown. This is where you will attach the gate switch. Repeat for the other door.

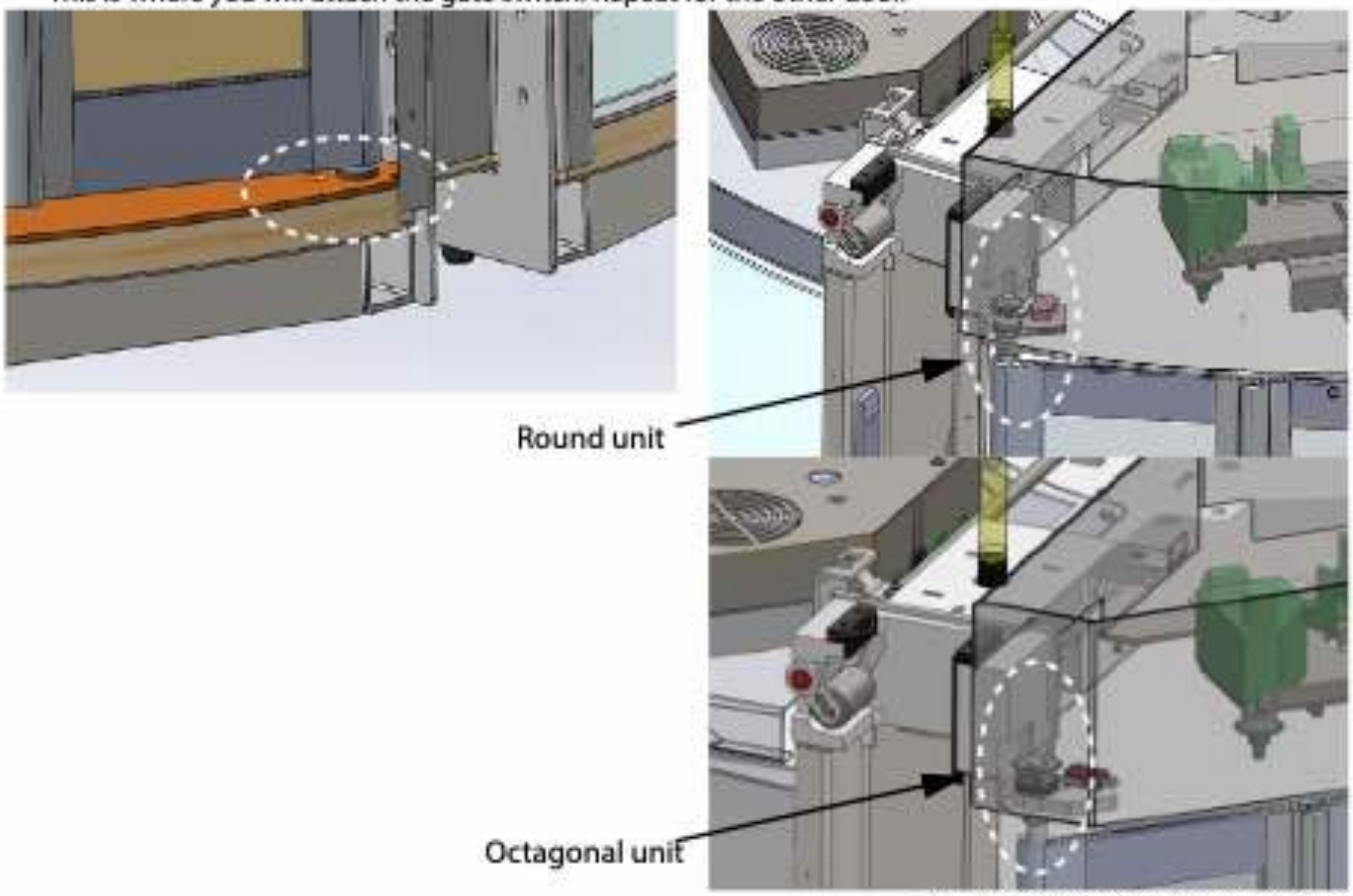

Figure 165: Cab door hinges - door in place

6 Attach the upper and lower track followers to the bi-fold doors as shown below using (2) screws per follower.

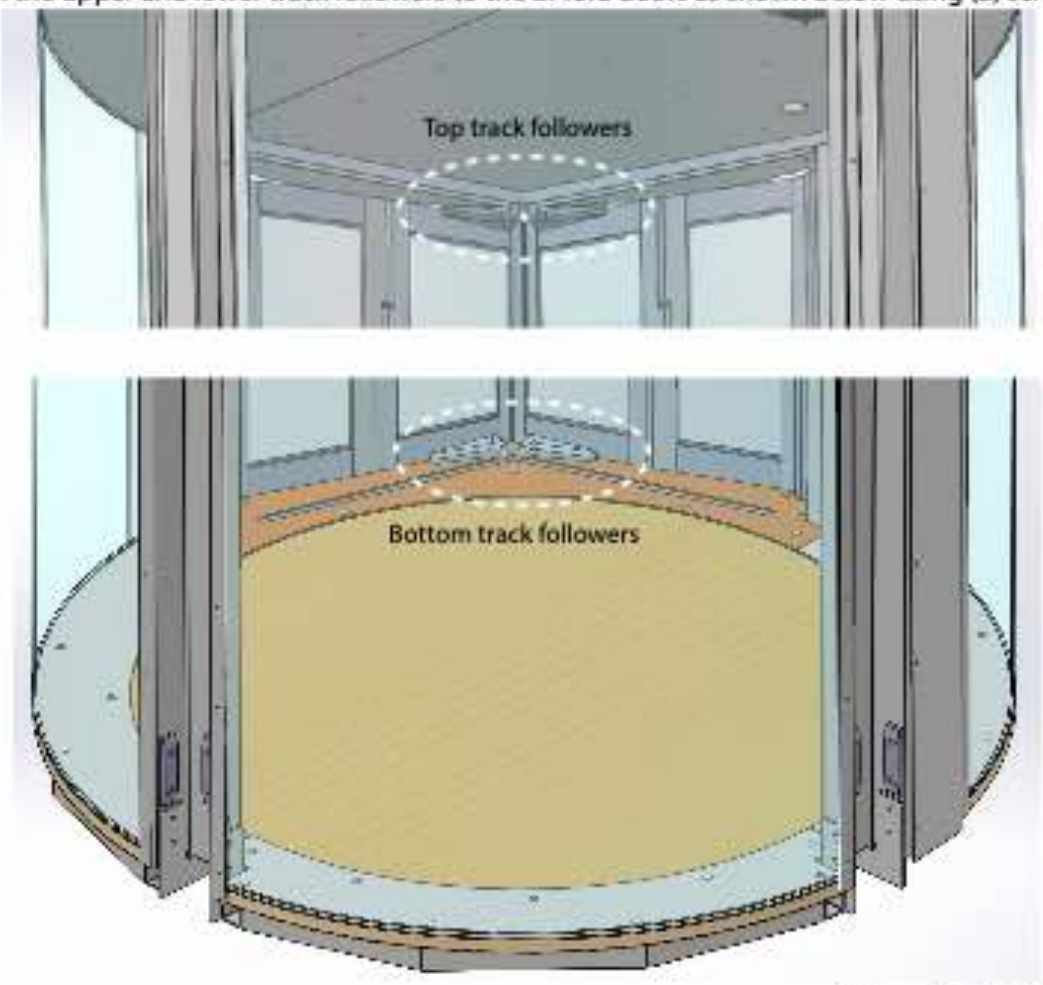

Figure 166: Bi-fold door track followers

Step 59
Bi-fold door and door operator

Install and set up the bi-fold door and door operator.

1 Insert the top hinge pin (spindle) into the hinge pin hole on the top of the bi-fold door. The top hinge pin is shown below.



Figure 167: Top hinge pin

a. Install the bi-fold door by inserting the top hinge pin into the top hinge location on the ceiling plate.
b. Ensure that the bottom of the bi-fold door sits on the bearings/pins/bushings.
c. Slide the switch bracket or limit base on the hinge pin with bushing/flange bearing and secure with the 2X 10-32 screws provided. See below.

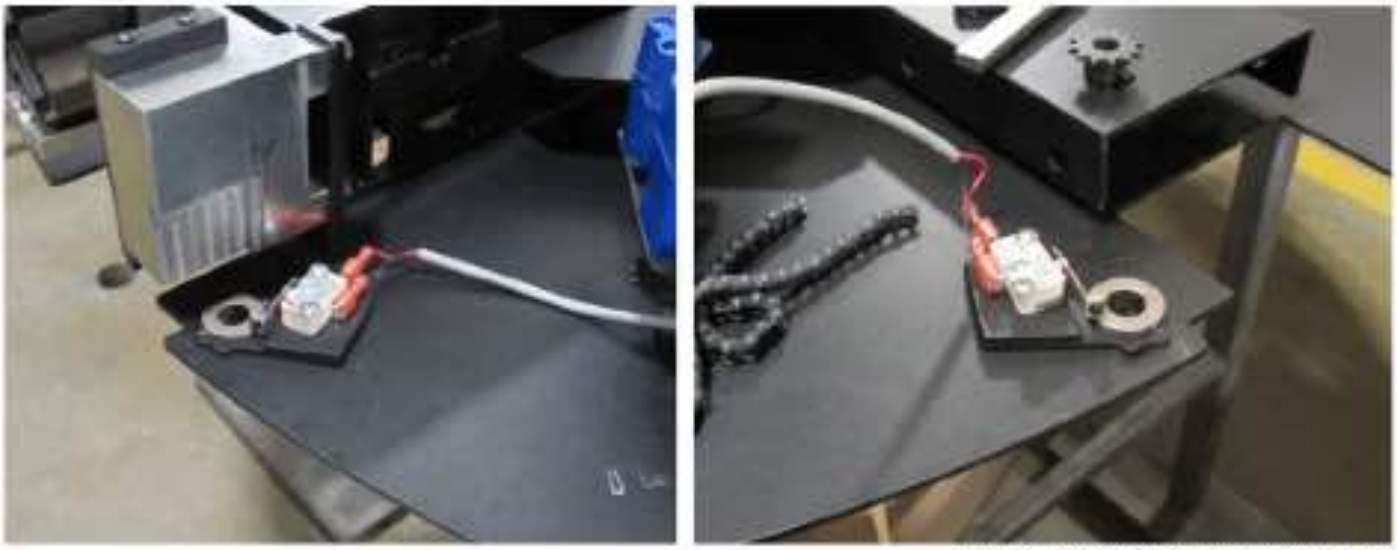

Figure 168: Switch brackets (both sides)

d. Install the cam and make sure the set screw lines up with the key slot in the pin.

e. Wrap the chain on the sprocket and install as shown below. Ensure the hub is oriented in the downward direction on the door hinge side.



Figure 169: Chain on sprocket at hinge pin location

f. Wrap the chain around the operator sprocket.



Figure 170: Chain on sprocket at operator



Figure 171: Chain on both sprockets

g. Repeat the above steps at the other side of the bi-fold operator.

h. Loosen the sprocket set screw at the operator side. Make sure the set screw is aligned in a reachable orientation.

i. Set the door in the closed position and ensure the operator cam is in the closed position.

j. Push/slide the operator towards the center of the cab to tension the chain.

k. Secure the operator to the adapter plate with the 1/4-20 bolts.



Figure 172: Secure operator

l. Tighten all set screws in the sprockets and then apply Loctite to the set screws after all adjustments are made.

m. Confirm proper operation by performing a test run.

n. Install the door operator cover.

Door operator board DIP switch settings

1 Set the DIP switches as needed (see below).
   - 2-position DIP switch for the door code based on door measurements
   - 3-position DIP switch for the folding speed of the doors (slow to fast)

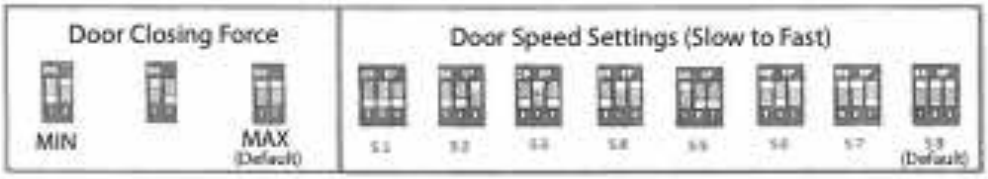

Figure 173: DIP switch settings

2 A layout of the door operator board is shown below.
3 After making all electrical connections, test the operator and verify that the doors open and close (fold and unfold) properly.

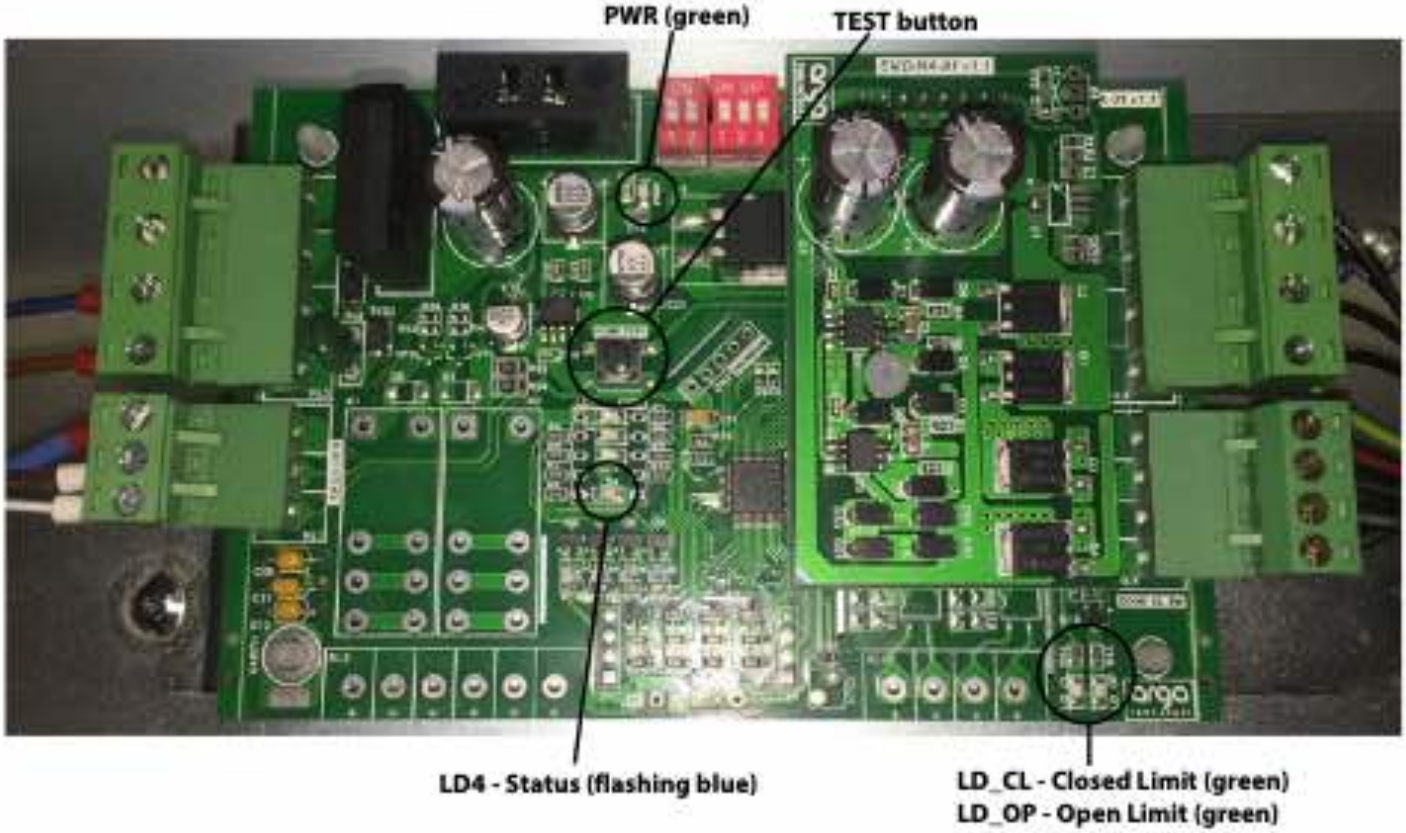

Figure 174: Door operator board layout

Test procedure

1 Power up the operator. The green PWR LED will be lit.
   - **NOTE:** If the doors were open halfway during power up, the doors should close all the way.
2 Verify that LD4 (blue status LED) is flashing.
3 Verify that the doors are fully closed and LD_CL is lit.
4 Press and hold the TEST button.
5 The doors should start opening and LD_OP should come on.
6 Verify that LD_CL goes out and LD_OP remains lit when the doors are fully open.
7 Release the TEST button.
8 The doors should start closing and LD_CL should come on.
9 Verify that LD_OP goes out when the doors are fully closed and only LD_CL remains lit.

Step 60
Install motor cover

1 Secure the motor cover in place using the 4 rail mount brackets and associated hardware (1 bracket at each rail).
2 Secure the center of the motor cover to the gearbox using the 2 center support brackets and associated hardware.
3 Place the pig mat under the drums on top of the motor cover but not blocking the slot for the rope.

NOTE: Bracket goes behind the washer and bolt head

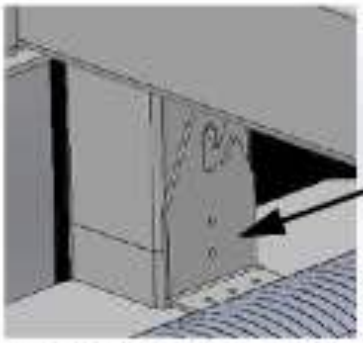

RAIL MOUNT BRACKETS (X4)

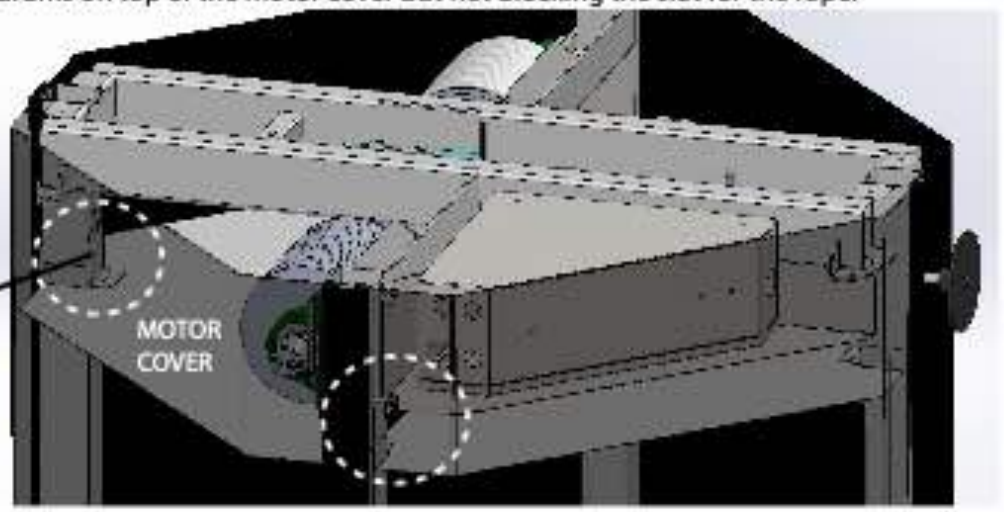

NOTE: This cutout is for the rope to travel and must be oriented correctly

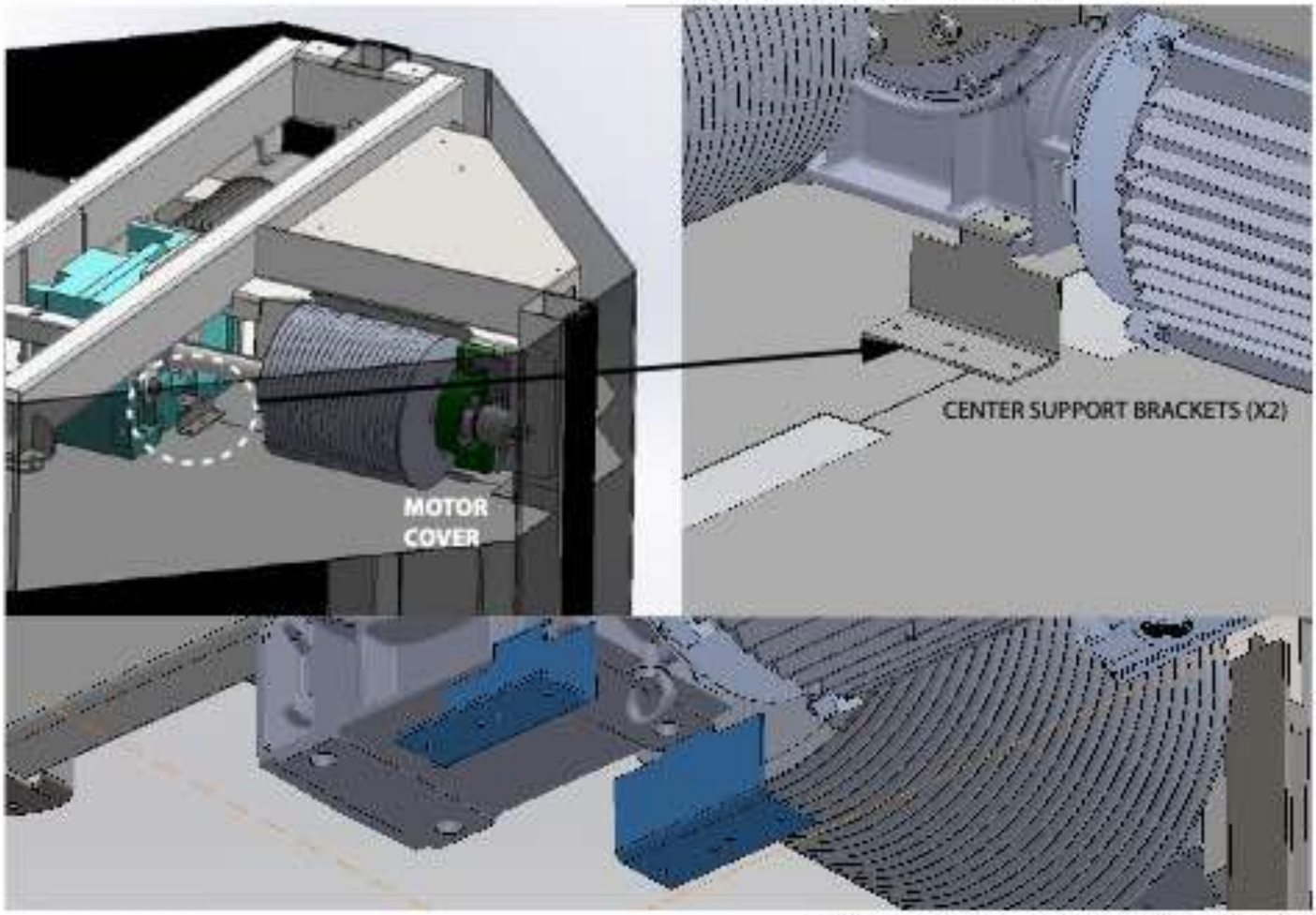

Figure 175: Motor cover and mounting brackets

Step 61
Install snap cap cover

Measure, cut and install snap cap cover pieces over all snap cap base pieces.

1 The measurement of the snap cap cover should be the distance between the rings minus 3/16".
2 The lower snap cap cover is pre-cut to the appropriate length from the factory with the exception of the cover above and below the EMI (interlock) which must be cut using the above method.

NOTICE

It is imperative that the EMI snap cap cover pieces are cut from a single 7-ft piece of snap cap, not from two 4-ft pieces. This will ensure that there is sufficient snap cap cover for all of the snap cap base.



Figure 176: Snap cap cover installation

Step 62
Install ramp (if base ring)

Attach the ramp to the base ring tabs at the door opening as shown below, using the countersunk screws from hardware kit PK-0001 (3 screws for round elevator; 4 for octagonal).



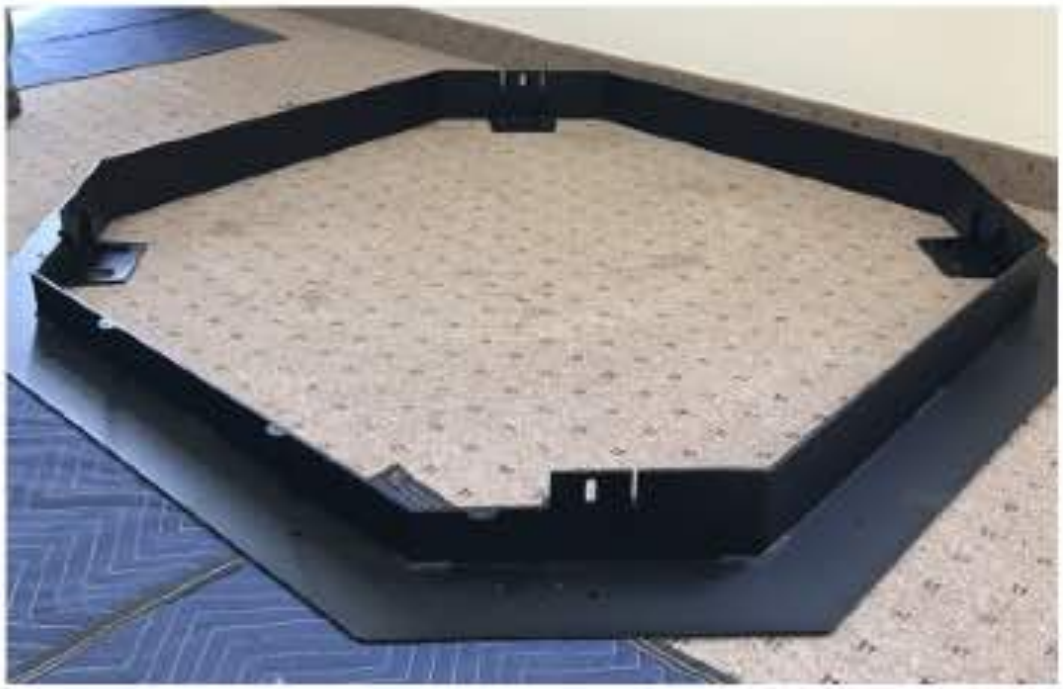

Figure 177: Ramp installation

Step 63
Install buffer springs

Install the 2 buffer spring plates on the pit floor so they line up with the 2 C-channel strike plates on the bottom of the car floor weldment (see below). Note that the 2 buffer springs are located at opposite rails as shown below.

Once the buffer springs are aligned with the strike plates, secure them to the pit floor using the hardware provided.

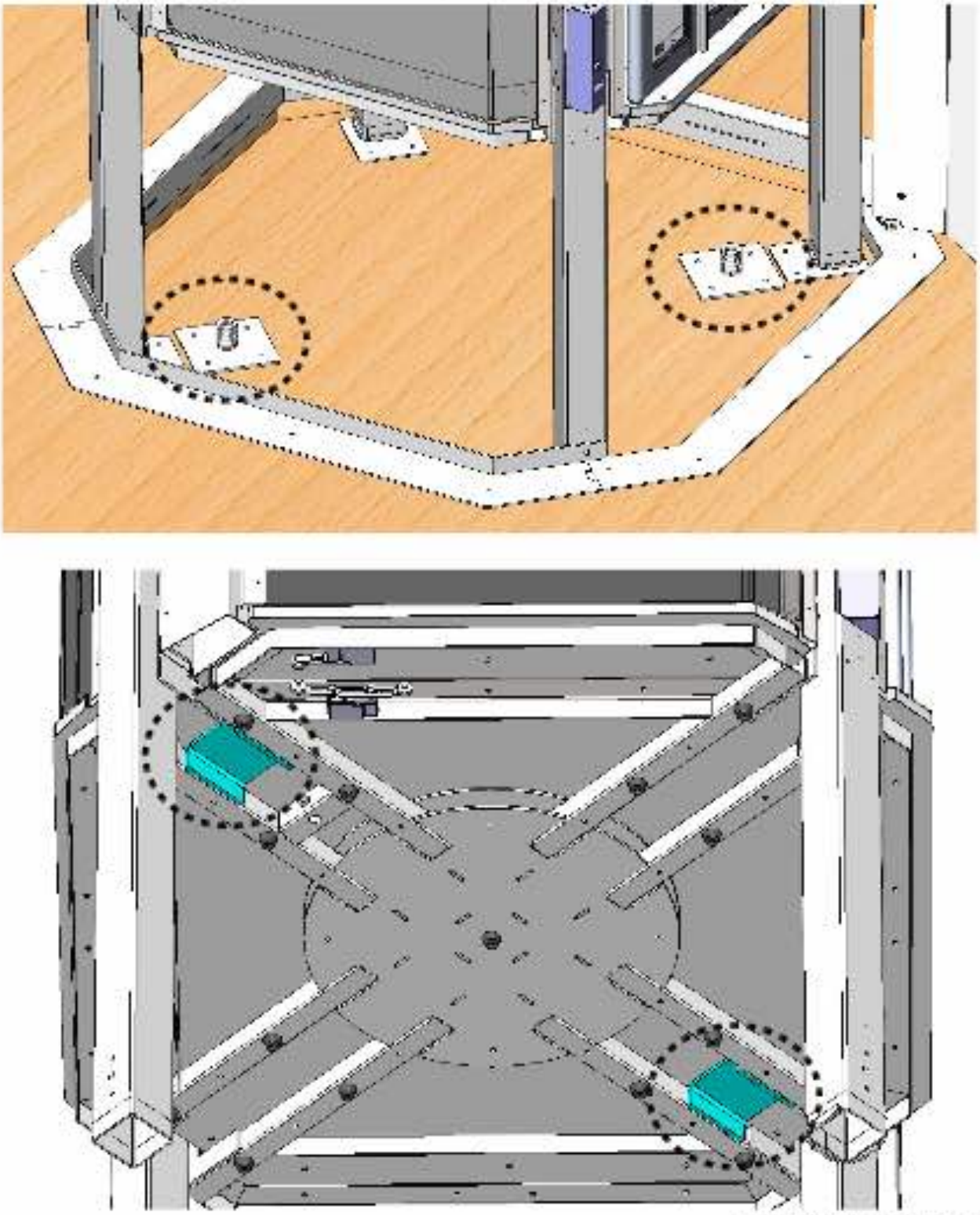

Figure 178: Buffer spring installation

INSTALLATION VERIFICATION AND TESTS

Step 64
Verify installation

Complete any wiring not already done by referring to the Electrical Schematics shipped with the lift. Verify the installation items in the checklist below BEFORE releasing the elevator to the customer. It is also recommended to go through this checklist prior to scheduling an inspection (if required).

CAB FRAME	VERIFIED
Cab upright to cab floor hardware is tightened completely	
Cab rail to cab ceiling hardware is tightened completely	
Double nuts and cotter pins are installed on rope ends and rope ends do not protrude through cab ceiling	
Ropes are tensioned equally and cab is level	
Guide roller hardware is tightened completely	
Cab floor and ceilings are secured properly and all fasteners have been installed	
OSG is installed and working correctly, confirmed by the testing procedures (refer to Step 33 *Perform OSG speed and brake test*)	
Test the OSG Tension switch by making the OSG belt slack and ensure that the safety circuit is broken	
Car gates opening and closing is smooth and free of resistance in both directions	
Top of car and inside door track is clean and vacuumed	
Acrylic/glass has been installed properly with extrusions on both sides	
Pushing acrylic/glass in both directions does not create any risks	
Safeties set and are not scraping	
Safeties set and are engaging with no load (refer to Step 34 *Perform safety test*)	

CAB CONTROLS AND PANELS	VERIFIED
COP buttons operate properly, illuminate, and do not stick	
Cab lights operates properly	
COP dash light operates properly	
Telephone functions, can make an outbound call, and dealer emergency contact sticker is applied on the COP	
Car stop switch works when car is at rest	
Car stop switch works when car is in motion	
Alarm works when pressed	

LANDINGS	VERIFIED
Hall call buttons operate properly, illuminate and do not stick	
Interlock functions properly and provides smooth operation of the hoistway door	
Interlock manual release functions properly with tool	
Hoistway doors operate smoothly and are aligned properly to maintain code clearances	
Overspeed belt bracket is secured to the pit floor	
Pit buffer plate is secured to the pit floor, if applicable	

HOISTWAY STRUCTURE	VERIFIED
Header ring bolts to vertical rails have been tightened completely	
Balcony ring bolts to vertical rails have been tightened completely	
Rings and balcony plates have been secured completely to appropriate floors and landings	
Shoring pin stored in a safe location in the pit	
Acrylic/glass has been installed properly with extrusions on both sides	
Pushing acrylic/glass in both directions does not create any risks	
Car ride quality is good with no scratching noise or bumps during travel	
Pit has been cleaned	

HEAD ASSEMBLY	VERIFIED
Machine keys are installed in both ends of the drums and the gearbox, and are secured with set screws	
Encoder is mounted and secured properly with Loctite	
Gearbox bolts are installed properly and fully tightened	
Drums are aligned properly to ensure appropriate cab operation with no clinking or grinding noise	
Pillow block bearings are mounted and secured properly	
Pillow block bearings are filled with a high quality, synthetic bearing grease	
All wires are routed properly and secured so they will not interfere with moving components	
Traveling cable is properly aligned and secured (no pinching or kinking)	
Split collars are installed fully against the both sides of the gearbox	
Manual lowering switch disables the unit when activated by the manual lowering device	

ELECTRONICS	VERIFIED
Limit switch assemblies and cams are installed and adjusted properly	
Disconnects are mounted properly and appropriately-sized fuses are installed	
Pit switch is tested for functionality and disables the unit when activated	
Pit light switch and pit light are tested for functionality	
All controller wiring is complete per the Electrical Schematics	
All car top box wiring is complete per the Electrical Schematics	
Wiring for COP, hall calls and interlocks is complete per the Electrical Schematics	
Wiring for pit switch is complete per the Electrical Schematics	
Wiring for pit light switch and pit light are complete per the Electrical Schematics	
Wiring for zone switches/sensors is complete per the Electrical Schematics	
Car speed: _____ UP _____ DOWN, maximum 30 fpm per specs	
GFCI is functional if available	
Wiring is neat, tidy, and permanently secured	
WARNING: No jumpers are to be left in circuits bypassing any safety item for the operation of this installation.	
Battery lowering / emergency power works in the down direction	
Auxiliary switch works	
Car door monitoring switches operate properly for front car gate	
Car door monitoring switches operate properly for rear car gate (if applicable)	
Open front car gate and ensure the car will not operate	
Open rear car gate (if applicable) and ensure the car will not operate	

Test for each landing

> **WARNING**
> Do NOT turn over the unit to the end-user until all items on the checklist have passed.

TEST (Record Pass/Fail)	Floor	VERIFIED
All hall door locking devices operate correctly		
Door Closed - unit will not run with door open (hold each hall door open and attempt to run the car away from the floor)	Floor 1	
	Floor 2	
	Floor 3	
	Floor 4	
	Floor 5	
	Floor 6	
Door Locked - unit will not leave door zone with door unlocked (manually hold the door unlocked and attempt to run the car away from the floor)	Floor 1	
	Floor 2	
	Floor 3	
	Floor 4	
	Floor 5	
	Floor 6	
Stopping distance of the car from each landing (ensure the car floor is +/- 0.25" of level stopping in the Up and Down direction with car empty and with full load)	Floor 1	DISTANCE
	Floor 2	
	Floor 3	
	Floor 4	
	Floor 5	
	Floor 6	

Test	Action Required	Results	Verified (Pass/Fail)
1. Mid-travel lockout	Move the lift to a position between landings and press the Emergency Stop. Attempt to open the platform gate and the landing doors.	All doors and gates must remain locked and cannot be opened.	
2. Bottom Landing Logic	Bring the platform to the Bottom Landing. Attempt to open the Upper Landing door.	The upper landing door must remain mechanically locked. Only the platform gate/ bottom landing door should be accessible.	
3. Top Landing Logic	Bring the platform to the Top Landing. Attempt to open the Bottom Landing door.	The bottom landing door must remain mechanically locked. Only the platform gate/top landing door should be accessible.	
4. Mechanical "Pull Test"	While the platform is NOT at a specific landing, apply firm outward pressure (a "Pull Test") to that landing door	The door must remain immovable. This confirms no mechanical bypass or misalignment of the interlock.	
5. Run-Stop Circuit	With the platform at a landing, open the gate/door. Attempt to call the lift to another floor.	The lift must not move. This confirms the "Gate Closed" and "Hoistway Door Locked" circuits are active.	

Step 65
Perform OSG speed and brake test

> **WARNING**
> To avoid personal injury, always ensure that testing is done in a safe manner according to your company's safety policies. Always follow your company's safety policies for entering the hoistway and working around elevators.

> **IMPORTANT**
> These tests should only be performed by a trained, qualified technician.

OSG speed test

Perform steps from the car top.

1 Remove the belt from around the OSG.
2 Install a rubber traction wheel in a hand drill (preferably a cordless drill).
3 Press the rubber traction wheel against the belt traction sprocket of the overspeed device.
4 Set the tachometer to RPM. Tripping under 225 RPM is acceptable by code (225 RPM = 75 ft/min.
5 Rotate the OSG wheel with the drill while holding the tachometer on the center of the shaft. Note that the wheel should be rotating clockwise to simulate the down direction of travel.
6 Ensure the OSG engages and stops prior to reaching 225 RPM.
7 Return the OSG belt to its standard location.

OSG brake test (manual tripping of the OSG)

Perform with car top level or slightly below the top landing.

1 Connect a small gauge wire to the OSG rotational arm and feed the wire out of the hoistway under the upper door.
2 With all doors closed, run the unit in the down direction using the temporary run buttons or P-Tool.
3 Run the elevator at the standard operating high speed and pull the wire to trip the OSG (from outside the hoistway with the door closed).
4 The linkage will engage the Type A safeties activating the slack rope plank switch. This will open the safety circuit and stop power to the elevator.
5 Inspect the linkage and safeties for proper engagement.
6 Jump the slack rope safety in the controller or car top box and run the lift up to release the safeties.
7 Remove the wire used to trip the OSG.and Inspect to ensure that all linkages and components are returned to their proper locations.
8 Remove the slack rope safety jumper from the controller or car top box.
9 Put the lift back into normal operation.

Step 66
Perform safety test

1 Place the rated load on the cab floor.
2 Run the cab up above the shoring pin location.
3 Install the shoring pin.
4 Place the bottle jack in the pit on top of a 2x4, with the bottle jack in the retracted position.
5 Remove the shoring pin.
6 Run the cab down to 2" above the bottle jack.
7 Pump up the bottle jack until you have about 3" of slack rope.
8 Carefully check that the safeties have engaged the rails properly and evenly.
9 Step clear of the pit!
10 Mark the level of the cab on the door frame/tower.
11 Use a long extension to release the bottle jack from **outside the hoistway**.
12 The cab will remain on the safeties and the rope will be slack proving that the safeties are supporting the gross load.
13 Mark the location of the cab on the door frame/ tower and record the distance from the original mark.
14 Run the cab up at least 3 feet to reset the safeties, as well as to allow access to the safety marks on the rails.
15 Install the shoring pin.
16 Ensure that the safety marks are fairly even in height and application.
17 Reset the slack rope switch.
18 Remove the bottle jack and 2x4 from the pit.
19 Remove the shoring pin.
20 Return to normal operation.

APPENDIX A: Electrical Schematics

The Vuelift Micro-6 Electrical Schematics are provided in a separate 11" x 17" package.

APPENDIX B: P-Tool Information

This appendix contains information about the Programming Tool (P-Tool) shown at the right.



To use the P-Tool (P/N 326049), connect it to the J1 connector in the bottom right-hand corner of the controller board.

Press the **[1]** key and the display will show the current status of the elevator.

You can use the P-Tool to perform the following:

- View the status of the elevator
- Change parameter settings
- View and clear the fault log
- View and clear the counters
- Put the system into temporary run mode
- Run the elevator while in temporary run mode

NOTICE

For a detailed description of the controller and the programming tool, refer to the *Micro-6 Controller TAL8 Operations Manual (000798)*.

There is no need to power down the controller to plug in the P-Tool. When you plug the P-Tool into a controller that is powered on, the P-Tool displays gibberish. To clear this and read faults, press and hold the 'D' key for 3 seconds.

TEMPORARY RUN MODE

Follow these steps to use temporary run mode:

1. Connect the following temporary jumpers on the Micro-6 controller board:
   - TC4 and TC5
   - TC4 and TC6
   - TC11 and FL6-4
2. Cycle power via the UPS while holding P-Tool **1, 5, 0** to enter temporary mode.
3. Press P-Tool **A** to move up. For high speed, press P-Tool **B** also.
4. Press P-Tool **D** to move down. For high speed, press P-Tool **B** also.
5. Use the Savaria temporary run buttons (P/N 200438) as normal when in temporary mode.

NOTICE

Be sure to remove the jumpers from the controller board when no longer running in temporary mode.

PROGRAMMING TOOL
SAVARIA LOGIC BOARD
Software v1.0



NORMAL DISPLAY:
TOP LINE = CAR POSITION
BOTTOM LINE = CAR STATUS

HOT KEY FUNCTIONS:
(*) - RESET
(A) - VIEW MENU

MENU OPTIONS:
1-NORMAL: DISPLAYS THE CAR'S POSITION AND STATUS
2-PROGRAM: ALLOWS YOU TO EDIT SYSTEM PARAMETERS
3-LOG: VIEW THE LAST 20 EVENTS
4-COUNT: THREE COUNTERS ARE PROVIDED: TOTAL, TRIP AND RE-LEVEL

A DETAILED DESCRIPTION OF EACH MENU OPTION IS PROVIDED

PROGRAMMING v1.0 (1 of 3)

CAR POS: 1 REST	PRESS (A) TO VIEW THE MENU
NORM (1) PROG (2) LOG (3) COUNTER (4)	PRESS (2) TO VIEW OR CHANGE PROGRAMMING
Password Then # Prog:	TYPE IN THE PASSWORD THEN PRESS THE (#) KEY FACTORY DEFAULT: 2,4,8,6,5
Number of Floors (2)	TYPE IN THE DESIRED NUMBER OF FLOORS AND PRESS # (ADJUSTABLE FROM 2 - 6)
Automatic PB (0)No (1)Yes (1)	SELECT (0) NO IF CONSTANT PRESSURE OPERATION IS DESIRED
Hydraulic App (0) (0)No (1)Yes	IF DRIVE SYSTEM IS HYDRAULIC SELECT (1)YES OTHERWISE SELECT (0) NO IF (0) NO IS SELECTED, RE-LEVELING IS DISABLED
Delay Up Stop X 0.01sec (000)	TYPE IN THE TIME AND PRESS # TO SET THE TIME THAT THE MOTOR WILL CONTINUE TO RUN AFTER "UL" DROPS OUT. ALLOWS CAR TO STOP HIGHER IN THE DEAD ZONE. (ADJUSTABLE 0-200 X10ms | 000 = DISABLED)
Run Timer (090) SEC	TYPE IN TIME AND PRESS # TO SET THE MAXIMUM RUN TIME (ADJUSTABLE FROM 30 - 180 SECONDS) See NOTE below.
Car Light Timer (05)Minute	TYPE IN THE TIME AND PRESS # TO SET THE TIME THE CAR LIGHT SHALL REMAIN ON AFTER THE COMPLETION OF A CALL (1-10 MINUTES)
Non-interference Timer (2) Sec	TYPE IN THE TIME AND PRESS # TO SET THE TIME BEFORE A NEW CALL CAN BE ACCEPTED (2-60 SEC)
Car Call Cancel Timer (10) Sec	TYPE IN THE TIME AND PRESS # TO SET THE TIME AFTER WHICH THE CALL WILL BE DROPPED IF THE CAR IS UNABLE TO RESPOND (ADJUSTABLE 0 - 60 SECONDS)

ONCE IN PROGRAMMING MODE:

TO MAKE A CHANGE PRESS THE KEY FOR THE DESIRED NUMBER AND PRESS THE (#) KEY TO ACCEPT THE CHANGE.

(A) TO RETUN TO THE MAIN MENU
(B) TO SCROLL UP
(C) TO SCROLL DOWN
(D) TO CLEAR THE CURRENT VALUE.
(#) TO ACCEPT THE CHANGE
(*) TO PERFORM A RESET

NOTE: If the RUN TIMER trips on a geared unit and the lift is not at floor level, it will have to be moved to a landing before the reset can be performed.

PROGRAMMING v1.0 (2 of 3)

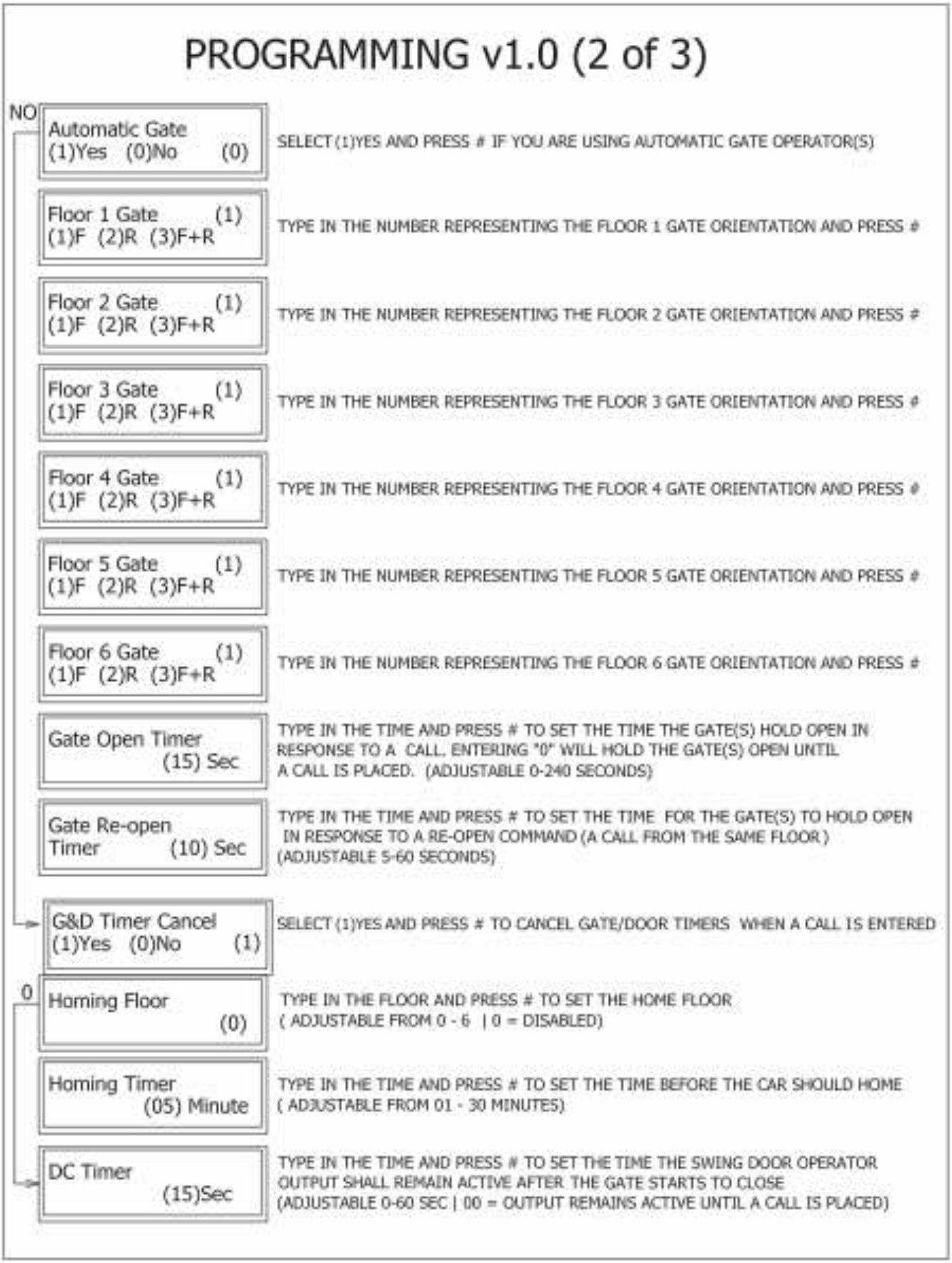

PROGRAMMING v1.0 (3 of 3)

Short Floors 1/2 (0)No (1)Yes (0)	SELECT (1)YES AND PRESS # TO INHIBIT HIGH SPEED IN BOTH DIRECTIONS WHEN RUNNING BETWEEN FLOORS 1 AND 2 MIN FLOOR DISTANCE IS 7" FOR APB AND 14" FOR CP
Short Floors 2/3 (0)No (1)Yes (0)	SELECT (1)YES AND PRESS # TO INHIBIT HIGH SPEED IN BOTH DIRECTIONS WHEN RUNNING BETWEEN FLOORS 2 AND 3 MIN FLOOR DISTANCE IS 7" FOR APB AND 14" FOR CP
Short Floors 3/4 (0)No (1)Yes (0)	SELECT (1)YES AND PRESS # TO INHIBIT HIGH SPEED IN BOTH DIRECTIONS WHEN RUNNING BETWEEN FLOORS 3 AND 4 MIN FLOOR DISTANCE IS 7" FOR APB AND 14" FOR CP
Short Floors 4/5 (0)No (1)Yes (0)	SELECT (1)YES AND PRESS # TO INHIBIT HIGH SPEED IN BOTH DIRECTIONS WHEN RUNNING BETWEEN FLOORS 4 AND 5 MIN FLOOR DISTANCE IS 7" FOR APB AND 14" FOR CP
Short Floors 5/6 (0)No (1)Yes (0)	SELECT (1)YES AND PRESS # TO INHIBIT HIGH SPEED IN BOTH DIRECTIONS WHEN RUNNING BETWEEN FLOORS 5 AND 6 MIN FLOOR DISTANCE IS 7" FOR APB AND 14" FOR CP
Call But. Fault 0-No 1-A 2-U (2)	No: WILL DISABLE THIS FEATURE A: WILL FLASH ALL CODES TO THE CALL BUTTON LIGHTS U: WILL FLASH ONLY THOSE CODES WHICH ARE USER CORRECTABLE
Auto Shutdown Counter X10(000)	TYPE IN THE NUMBER AND PRESS # TO SET THE NUMBER OF TRIPS BEFORE THE ELEVATOR IS DISABLED (ADJUSTABLE 0 - 999 | 0 = DISABLED) THIS FEATURE WILL BE DISABLED AFTER FOUR ACTIVATIONS
CALL 3 ASSIGNMENT (3)	TYPE IN THE FLOOR NUMBER WHICH THE CAR WILL RUN TO WHEN THIS CALL IS PLACED. THE FLOOR 3 DOOR SETTINGS WILL APPLY WHEN THIS IS USED. (THIS PARAMETER DOES NOT SHOW UP WHEN THE NUMBER OF FLOORS >= 3)
CALL 4 ASSIGNMENT (4)	TYPE IN THE FLOOR NUMBER WHICH THE CAR WILL RUN TO WHEN THIS CALL IS PLACED. THE FLOOR 4 DOOR SETTINGS WILL APPLY WHEN THIS IS USED. (THIS PARAMETER DOES NOT SHOW UP WHEN THE NUMBER OF FLOORS >= 4)
CALL 5 ASSIGNMENT (5)	TYPE IN THE FLOOR NUMBER WHICH THE CAR WILL RUN TO WHEN THIS CALL IS PLACED. THE FLOOR 5 DOOR SETTINGS WILL APPLY WHEN THIS IS USED. (THIS PARAMETER DOES NOT SHOW UP WHEN THE NUMBER OF FLOORS >= 5)
CALL 6 ASSIGNMENT (6)	TYPE IN THE FLOOR NUMBER WHICH THE CAR WILL RUN TO WHEN THIS CALL IS PLACED. THE FLOOR 6 DOOR SETTINGS WILL APPLY WHEN THIS IS USED. (THIS PARAMETER DOES NOT SHOW UP WHEN THE NUMBER OF FLOORS = 6)
Modify Password (1)Yes (0)No (0)	TYPE IN C TO KEEP THE PASSWORD AND VIEW NEXT PARAMETER TYPE IN 1 AND PRESS # TO CHANGE THE PASSWORD NOTE: PASSWORD MUST BE 5 DIGITS (NUMERICAL ONLY)

LOG



PRESS (A) TO VIEW THE MENU

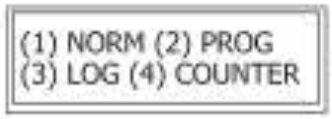

PRESS (3) TO VIEW THE LOG



THE FIRST LINE IS A DESCRIPTION OF THE EVENT
2U=EVENT OCCURED AT 2ND FL WHILE TRAVELING UP
L= LAST EVENT

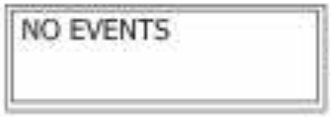

(C) VIEWS PREVIOUS EVENT UNTIL "NO EVENTS" IS SEEN

ONCE IN LOG MODE:

THE LOG STORES 20 ERRORS IN A LAST IN FIRST OUT FORMAT.

(A) TO RETUN TO THE MAIN MENU
(B) TO VIEW LATER EVENT
(C) TO VIEW EARLIER EVENT
(D) TO CLEAR THE LOG
Note: PASSWORD IS REQUIRED TO CLEAR LOG
(*) TO PERFORM A RESET

COUNTERS

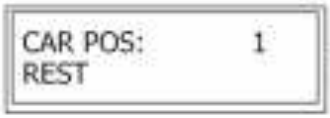

PRESS (A) TO VIEW THE MENU

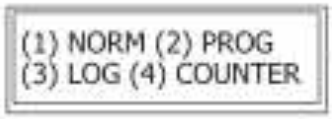

PRESS (4) TO VIEW COUNTERS

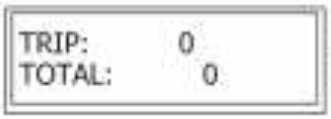

THE "TRIP" AND "TOTAL" RUN COUNTERS ARE DISPLAYED



(C) TO VIEW UP LEVELING COUNTER

ONCE IN COUNTER MODE:

THE SYSTEM HAS THREE COUNTERS.

TRIP: INCREMENTS EACH TIME THE CAR MOVES IN RESPONSE TO A CALL. RESETTABLE

TOTAL: SAME AS TRIP BUT NOT RESETTABLE

UP LEVELING: INCREMENTS EACH TIME THE CAR MOVES UP WITHOUT A CALL. RESETTABLE

(A) TO RETUN TO THE MAIN MENU
(B) TO VIEW PREVIOUS COUNTERS
(C) TO VIEW NEXT COUNTER
(D) TO CLEAR THE COUNTERS
Note: PASSWORD IS REQUIRED TO CLEAR COUNTERS
(*) TO PERFORM A RESET

APPENDIX C: Diagnostic Beep Codes

The Micro-6 controller can be set up to provide audible fault codes (diagnostic beep codes). These codes can help the user diagnose certain problems themselves and also provide information to the dealer as to why a lift isn't functioning properly.

To enable the codes, use the P-Tool and set the parameter "call but.fault" to:

- 0 for no audible codes
- 1 for User codes only
- 2 for User and Service codes

User codes provide feedback to the user and do not require a service visit.

- 1 short beep - a gate is open or the in-car Stop switch is activated. Make sure the in-car Stop switch is in the Run position. Check that the car gate is closed.
- 2 short beeps - a door is open. Check that the landing door is closed.
- 3 short beeps - gate needs to be cycled. Manually open the gate.
- Single beep every 30 seconds - power failure, unit will only respond to calls/commands to go in the down direction.

Service codes are those that require a site visit. All Service codes begin with one long 2-second beep.

- 1 long and 1 short beep - possible problems are overload trip, run timer fault, safety circuit open, door lock fault or auto shutdown counter.
- 1 long and 2 short beeps - possible problems are re-level shutdown or low pressure switch activated.
- 1 long and 3 short beeps - possible problems are selector fault, selector encoding or position error.

APPENDIX D: Maintenance

***Minimum once a year is required by technician**

Verification	Item	Description	Frequency
INSIDE CAR	Car interior	Examine the car interior for damage including the ceiling, handrails, door panels, lighting and floor. Tighten all fasteners in the car panel and replace as needed.	**Normal**: Every Year **Heavy**: Every Year **Excessive**: Every 6 months
	Car controls and panel	Examine the condition of the car control panels and check the operation of all lights. Replace all burnt out lights.	
	Leveling, stop, acceleration and deceleration	Run the car to each floor in both directions to observe the leveling accuracy, stopping, acceleration and deceleration. Adjust as needed.	
	Car door operation	Observe the door for proper operation including smooth movement, starts and stops, and alignment.	
	Ride floor to floor	Run the car from floor to floor and observe for smooth travel and unusual noises. Adjust or repair as needed.	
	Car lights and ventilation	Verify proper operation of the car emergency light and ensure adequate ventilation.	
	Restricted opening device mechanism	Examine the restricted opening device mechanism (if applicable) for proper operation and adjust as needed.	
OUTSIDE HOISTWAY	Hall call station and lights	Examine the hall stations for condition and replace all burnt out lights. Observe operation of the audible signal when the Emergency Stop is activated.	**Normal**: Every Year **Heavy**: Every Year **Excessive**: Every 6 months
	Hoistway doors	Examine the door panel and clearance between the panel and entrance frames. Examine proper interlock functionality and operation. Adjust as needed.	
	Unlocking device	Examine the hoistway door unlocking device for damage. Repair or adjust as needed.	
MACHINE ROOM	Housekeeping	Clean the machine room floor to prevent slipping and trip hazards, fire hazards and contamination of the equipment. Ensure the machine room is not being used for storage; inform the customer of any violation.	**Normal**: Every Year **Heavy**: Every Year **Excessive**: Every 6 months
	Trash, used parts, etc.	Ensure that all trash is discarded after maintenance is complete.	
	Controller and starter	Examine the controller and motor starter for: - Cleanliness - Condition of contacts and remaining contact material - Fuses for correct size and fit in holders and corrosion in fuse holder - Relays for worn shunts and signs of overheating - Evidence of overheating	

Verification	Item	Description	Frequency
TOP OF CAR	Stop switch	Verify the car will not run with the stop switch in the STOP position.	**Normal**: Every Year **Heavy**: Every Year **Excessive**: Every 6 months
	Cleanliness	Clean all debris from the car top.	
	Top car guides	Examine car rail to hoistway rail conditions at the car top. Note any abnormal wear patterns or changes in alignment.	
	Guide rails	Examine the car rails for loose fastenings and fit at all joints.	
	Traveling cable	Examine the traveling cables for wear, chafing, kinking and alignment. Examine the attachment points for secure fastening and looseness.	
	Doors, hangers and locks	Verify the interlock is functioning properly. With the door open, attempt to move the car using the hall call and COP buttons. Observe the door closing for any roughness in bearings, inconsistent operation, or misalignment.	
	Hoistway cleaning	Clean dirt and trash from all horizontal surfaces including the car and entrance sills.	
	Other	Observe any problems with or within the hoistway that should be addressed such as: • Unauthorized equipment installed in the hoistway • Damage to the hoistway enclosure which would affect its fire resistance rating • Evidence of intentional acts • Any evidence of unauthorized people entering the hoistway	
	Examine the ropes	Examine the car ropes for equal tension, and visually inspect for any frays or deformation of the ropes which would negatively impact their strength.	
	Leaving car top	Clean up and dispose of debris properly. Return the car to normal operation and the stop switch to the RUN position.	
PIT (IF APPLICABLE)	Stop switch and light	Examine the operation and condition of the stop switch. Repair as needed.	**Normal**: Every Year **Heavy**: Every Year **Excessive**: Every 6 months
	Cleaning	Clean the pit. Examine the bottom level landing sill and clean as needed.	
	Bottom car guides	Examine car rail to hoistway rail conditions at the car bottom. Note any abnormal wear patterns or changes in alignment.	
	Traveling cable	Examine the traveling cables for wear, chafing, kinking and alignment. Examine the attachment points for secure fastening and looseness.	
	Leaving the pit	Remove all tools and verify operation of the elevator.	
OVERSPEED (NEW CAR)	Overspeed belt		**Normal**: Every Year **Heavy**: Every Year **Excessive**: Every 6 months
	Overspeed system		
ELECTRICAL CIRCUIT OVERSPEED (ORIGINAL CAR)	Plastic flywheel and plastic flywheel gear		**Normal**: Every Year **Heavy**: Every Year **Excessive**: Every 6 months
	Plastic shaft bushings		
BRAKES	Safety brakes and motor brake	Verify proper operation of the safety brakes and the motor brake. Check with full load every 12 month	**Normal**: Every Year **Heavy**: Every Year **Excessive**: Every 6 months
BRAKES (WITH FULL LOAD)	Safety brakes and motor brake		

APPENDIX E: Cleaning

Standard Cleaning Procedures

NOTICE

The customer can perform the Standard Cleaning Procedures provided below.

DANGER

Under no circumstances should a customer attempt to remove panels for cleaning!

Clean the acrylic panels with a mild soap and water solution or with acrylic cleaner. A few precautions must be taken to ensure a long operating life and to maintain the acrylic panel clarity on your unit.

NOTICE

DO NOT use any cleaning product that contains ammonia or petroleum. *This includes Windex ® and most traditional glass cleaners.*

WASHING

Wash the acrylic panels with a solution of mild soap or detergent and lukewarm water. Use a clean soft cloth, applying only light pressure. Rinse with clean water and dry by blotting with a damp cloth or chamois.

NOTICE

DO NOT USE:

Window cleaning sprays, kitchen scouring compounds or solvents such as acetone, gasoline, benzene, alcohol, carbon tetrachloride, or lacquer thinner. These can scratch the sheet's surface and/or weaken the sheet causing small surface cracks called "crazing.".

DUSTING

Dust with a soft, damp cloth or chamois. Dry or gritty cloths may cause surface scratches and create a static electric charge on the surface (refer to the section on Neutralizing Static Electricity).

POLISHING

Protect the acrylic panels and maintain their surface gloss by occasional polishing with a good plastic cleaner and polish (refer to the section on Cleaners for a list of acceptable cleaners and polishes).

Apply a thin, even coat with a soft clean cloth and polish slightly with cotton flannel or a microfiber towel. Then wipe with a damp cloth to help eliminate electrostatic charges that can attract dust particles.

NEUTRALIZING STATIC ELECTRICITY

A static electrical charge can develop on the acrylic panels during handling and processing. This is not unique to the acrylic panels, but is common to many materials, particularly plastics.

When the paper or film masking is stripped off the acrylic sheet, a static charge is created on the sheet surface. Static electricity attracts dust, chips, etc. floating in the air or on nearby work surfaces and holds these contaminants tightly to the surface. A compressed air gun will remove some of this surface dirt, but much of it continues to cling to the sheet.

Several anti-static cleaners for plastics are also available which will reduce static electricity and dust attraction. Wiping with a soft damp cloth or chamois is all that is necessary to keep the acrylic panels dust-free between applications of these cleaners.

NOTICE

A de-ionizing tool can be used during installation to eliminate a majority of the static electricity (causes the dust to fall away).

CLEANERS

Cleaners which ***MAY BE USED:***

- Plexus® (Anti-Static Cleaner)
- Novus® #1 Acrylic Cleaner and Polish
- ATM Mirage Glass and Acrylic Cleaner
- Zep® Commercial Glass Cleaner (must state for use on Plexiglas®)
- Plexi-Clean (Anti-Static Cleaner)
- Prist Aerospace Anti-Static Acrylic, Plastic & Glass Cleaner
- Cleaners which explicitly state "Safe for use with plastics and acrylic"

Cleaners which ***MAY NOT BE USED:***

- Windex® Glass Cleaner
- Sprayway Ammonia-Free Glass Cleaner
- Goo-Gone®

These above lists are for reference only and are not comprehensive. If you have any questions about the acceptability of a specific cleaner, please contact your authorized dealer.

Note that damage caused by inappropriate cleaners and techniques is not covered under warranty.

Cleaning Between Panels (Typical Environments)

NOTICE
This procedure must be performed by a Qualified Technician only.

Fingerprints, oils or other contaminants in between the car and hoistway panels is very rare. In a typical home, there is only dust that needs to be removed.

Therefore, cleaning in between the panels can be accomplished from the car top using a Swiffer-type duster (a small square dust mop with a rectangular head and a swivel end on a long handle).

This will allow you to reach in between the panels to clean the OUTSIDE of the car panels and the INSIDE of the hoistway panels.

Cleaning Between Panels (Extreme Environments)

NOTICE
This procedure must be performed by a Qualified Technician only.

DANGER
Be very careful when removing panels for cleaning!

To clean the OUTSIDE of the car panels and the INSIDE of the hoistway panels, you need to remove the hoistway panels.

The following tools and materials are required:

- 19mm open-end wrench
- Piece of cloth/towel
- 5/16" nut driver
- Approved cleaner and clean soft cloth per the Standard Cleaning Procedures on the previous page

1 Start at the bottom of the panel to remove the snap cap cover.

a. Place a piece of cloth/towel on the panel and around the snap cover to avoid damaging the panel.

b. Insert the open end of the wrench in between the aluminum snap cap cover and the rubber snap cap extrusion.

c. Pry on the wrench while pushing the wrench into the rubber and this will slowly pop off the snap cap cover.



2 Remove the snap cap cover.



3 Once the snap cap cover is removed, use a 5/16" nut driver to remove the snap cap base.



4 Repeat steps 1 to 3 for the snap cap cover and base at the other side of the panel.

5 Tilt the hoistway panel out of the H-channel at the bottom and remove it for cleaning.



6 Clean the hoistway panel and the car panel per the instructions in the Standard Cleaning Procedures. **Be sure to use only approved cleaners**.



7 When both the car panel and the hoistway panel are clean, reinstall the hoistway panel ensuring the bottom is inserted into the H-channel.



8 Attach the snap cap base at both sides of the panel to secure the panel in place.



9 Attach the snap cover at both sides of the panel. Engage one edge with the base and use a rubber mallet as needed to snap the cover into place.



10 Repeat this entire procedure for all panels.

Removing Scratches From Panels

NOTICE

This procedure must be performed by a Qualified Technician only.

DANGER

Be very careful when removing panels!

To remove scratches from an acrylic panel, remove the panel as needed. Refer to the previous procedure for instructions on removing panels.

You will need to purchase some attachments for your drill in order to use it as a polisher (drill adapter with shank, sponge pads, and woolen buffer pad - see the photo below). You can purchase these attachments as a polishing kit.



Drill adapter and sponge pad



Woolen buffer pad



Scratch removal and cleaning compounds

Here is a sample online link where you can purchase a polishing kit:

https://a.co/d/06L6UA8x

Here is a sample online link where you can purchase the cleaning and scratch removal compounds:

https://a.co/d/0gk71eGv

Once the panel is removed, follow the steps below to remove any scratches.

PREPARATION

1 Be sure to cover the surrounding area (using plastic and tape) where you will be working with the panel. The cleaning and polishing process can be messy.

2 Use water to wet the area around the scratch (about 24" from the scratch). You should spray water on any area of the panel where you don't want the compound to stick. This is important because once the compound dries it is very difficult to remove.

CLEANING

3 Once the panel is ready, use Novus product #1 to clean the scratch and the surrounding area.

4 Make sure the entire area where you will use the products on the panel stays clean.

5 Make sure the pads are clean so they won't scratch the panel.

POLISHING

6 Once everything is clean, put some Novus product #3 on the buffer pad.

7 First, apply the product to the surface of the panel without motion.

8 Then, slowly start to work the product onto the surface of the panel. Be patient and make sure the drill speed is not too fast.

9 Be sure to move the buffer pad all around the panel and not stay in one place too long.

10 When the product starts to dry, apply more.

11 Eventually the product will disappear and the scratches will be gone.

GLOSSING

12 Once you are satisfied with the job, repeat the above process with Novus product #2 to gloss the surface.

FINAL CLEANING

13 Finish up with a final cleaning of the panel using Novus product #1 again.

14 Remove all tape and plastic that was used to cover the surrounding area.

15 Clean off any compound with hot water.

16 Perform a final cleaning and treatment on the panel using Plexus® (Anti-Static Cleaner).

17 Reinstall the panel into the unit.

APPENDIX F: Savaria Link Option

For information on the Savaria Link option, refer to the following document:

Savaria Link Installation and Setup Guide, P/N 001180

Appendix G
RATH 2400 Installation and Operation

System Requirements

TELCO Voltage: 48-52vdc on an analog line with at least 25mA of line current and valid dial tone. Line must be dedicated for a 2400 Series phone.

Getting Started

Carefully open the shipping box and remove contents. Inspect the phones for damage. If there is any damage, call 800-451-1460 immediately to arrange corrective action.

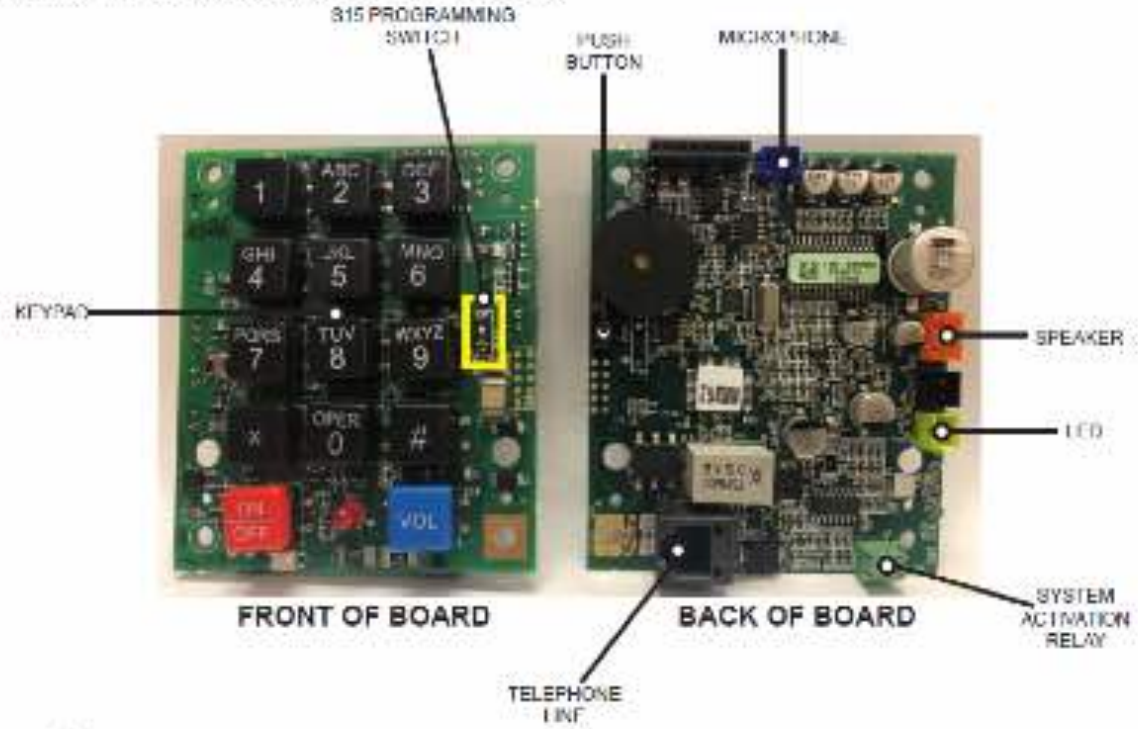

Line Connections

Connect a dedicated phone line to the RJ11 jack on the back of the 2400 Series phone board labeled TEL LINE using one of the following recommended methods:

1 Crimp the phone line on to the center pins of a standard RJ11 jack and plug into TEL LINE input on the back of the 2400 Series phone.

2 Connect the phone line to a female RJ11 jack then take the phone line cord provided with the 2400 Series phone from the jack to the TEL LINE input on the 2400 series phone.

3 Connect the phone line to a biscuit jack style connector. Screw the phone line onto red and green terminals on the back of the biscuit jack. Take the phone line cord provided with the 2400 Series phone from the biscuit jack to the TEL LINE input on the back of the 2400 Series phone.

RATH* phones use the center pins of the RJ11 (red and green) for the outside phone line. Phone is not polarity sensitive.

> **NOTICE**
>
> Do not cut off the end of the phone line cord and splice the phone line directly onto the line cord.

It is recommended that the wiring used inside the traveling cable or horizontal cabling is a 20 - 22 AWG twisted shielded pair with the shield grounded at the elevator controller end only. This will help reduce or eliminate any possible interference.

The phone line can be checked through the 2400 Series phone by pressing the **ON/OFF** button on the keypad.After pushing the **ON/OFF** button, the phone should have dial tone. Once the phone has dial tone, use the keypad to dial a number. Verify that the call connects and has two-way communication. Press the **ON/OFF** button again to end the call.

Quick Set-up

RATH® 2400 Series phones can only be programmed using the onboard keypad. When programming 2400 Series phones, it is imperative to move quickly through the programming due to many Telco systems providing limited off-hook time.

Program Number

1 Press the **ON/OFF** button (phone should give a dial tone)
2 Slide the S15 switch down into "ON/PROGRAM" position
3 Press **1, *,** the number you want the phone to dial, blue **VOL** key

Program Message

1 Press **7, *, 2** for message to play twice
2 Press **4, *** (phone will start beeping), speak message when beep ends, press blue **VOL** key when finished speaking (message will playback automatically)
3 Slide S15 switch back up into "1" position
4 Press the **ON/OFF** button to turn the phone off

Detailed Programming

Programming Primary Phone Number:

1 Press the **ON/OFF** button (phone should give a dial tone)
2 Slide the S15 switch down into "ON/PROGRAM" position
3 Press **1, *,** the number you want the phone to dial, blue **VOL** key
4 Slide the S15 switch back up into "1" position
5 Press the **ON/OFF** button to turn the phone off

Note: In situations where a delay is needed, such as needing an 8 or 9 to dial out, use the **ON/OFF** button on the keypad for a pause. The button can be pressed multiple times for more of a delay. One PAUSE = 1 second.

Programming Secondary Phone Number:

1 Press the **ON/OFF** button (phone should give a dial tone)
2 Slide the S15 switch down into "ON/PROGRAM" position
3 Press **2, *,** the number you want the phone to dial, blue **VOL** key
4 Slide the S15 switch back up into "1" position
5 Press the ON/OFF button to turn the phone off

NOTICE
In situations where a delay is needed, such as needing an 8 or 9 to dial out, use the **ON/OFF** button on the keypad for a pause. The button can be pressed multiple times for more of a delay. One PAUSE = 1 second.

Programming Location Message:

RATH® phones can play a location message when the call is answered. This feature is used when the phone is calling a phone number that cannot identify where the call is coming from by caller ID, or needs more location information than caller ID can provide. This feature is turned on by default. Perform the following steps to program the location message feature.

Turning Location Message ON:

1 **Press the ON/OFF button (phone should give a dial tone)**
2 Slide the S15 switch down into "ON/PROGRAM" position
3 Press **7, *, (1, 2, or 3)** (1 will play message once, 2 will play message twice, 3 will play message on a loop until the operator presses the **#** key 4 times)
4 Press **4, *** (phone will start beeping), speak message when beep ends, press blue **VOL** key when finished speaking (message will playback automatically)
5 Slide S15 switch back up into "1" position
6 Press the ON/OFF button to turn the phone off

Turning Location Message OFF:

1 Press the **ON/OFF** button (phone should give a dial tone)
2 Slide the S15 switch down into "ON/PROGRAM" position
3 Press **7, *, 0**
4 Slide the S15 switch back up into "1" position
5 Press the **ON/OFF** button to turn the phone off

NOTICE
The answering party can replay the message anytime by pressing ***, ***.

Resetting the Phone:

The phone can be reset by performing the following steps:

1 Press the **ON/OFF** button (phone should give a dial tone)
2 Slide the S15 switch down into "ON/PROGRAM" position
3 Press **9, *, 7, 2, 8, 4**
4 Press **5, *, 1**
5 Slide the S15 switch back up into "1" position
6 Press the **ON/OFF** button to turn the phone off

NOTICE
Resetting the phone will not clear out any programmed numbers or messages.

Programming Talk Timer:

Talk Time is the amount of time that two-way communication will occur after a call is answered. When Talk Time expires, the phone will hang up and the button on the phone will need to be pushed again to re-establish a call.

1 Press the **ON/OFF** button (phone should give a dial tone)
2 Slide the S15 switch down into "ON/PROGRAM" position
3 Press **6, *,** 3 digit number in minutes (3 minutes = 003, 20 minutes = 020)
4 Slide the S15 switch back up into "1" position
5 Press the **ON/OFF** button to turn the phone off

> **NOTICE**
> The lowest Talk Time can be set to is 1 minute. The longest is 999 minutes.

Programming Auto Answer:

Auto Answer allows the 2400 Series phone to answer if called without someone needing to push the call button.This feature is required by code. By default, all 2400 Series phones are manufactured with Auto Answer enabled.This feature should only be turned off in a home or private elevator application.

1 Press the **ON/OFF** button (phone should give a dial tone)
2 Slide the S15 switch down into "ON/PROGRAM" position
3 Press **8, *, 1 or 2** (1 is ON, 2 is OFF)
4 Slide the S15 switch back up into "1" position
5 Press the **ON/OFF** button to turn the phone off

Volume Adjustment:

If the voice of the person you call is not loud enough in the phone speaker, increase the volume by pressing the ON/OFF button. When the phone has dial tone, press the blue VOL button. Each time you push the VOL button, the volume will go up or down one level. 2400 Series phones have three volume levels: high, medium, and low.When desired volume level is reached, push the ON/OFF button to save the change.

Troubleshooting

Phone will not let you get through programming:

- Program the phone while it is on an active call:

1 Press the **ON/OFF** button
2 Call your cell phone number and answer the call
3 Slide the S15 switch down to "ON/PROGRAM" position
4 Perform the desired programming steps on the 2400 Series phone keypad
5 Slide the S15 switch back to "1" position
6 Press the **ON/OFF** button on the 2400 Series phone (this will also hang up the call on your cell phone)

- Verify the voltage on the phone line meets the minimum needed for the phone. See the "System Requirements" section for voltage range.
- Exit programming mode and re-enter. Attempt programming steps again.

Phone does not call out:

- Verify the voltage on phone line and dial tone. Phone lines can have voltage but no dial tone. 2400 Series phones must have dial tone or a valid ring down circuit to call out properly.
- Verify the push button is connected to the "PANIC" connector on the back of the circuit board.
- Remove the push button from the black "PANIC" connector on the circuit board. Use a small piece of wire or a small screwdriver to short 2 pins inside of the connector on the circuit board. If the phone calls out after shorting pins on the circuit board, there is a problem with the push button.
- Double check the number being programmed into the 2400 Series phone. Verify the phone line doesn't require an access digit such as an 8 or 9 to dial out or have any line restrictions such as long distance or toll restriction.
- Verify the phone line going into the 2400 Series phone is dedicated. 2400 Series phones cannot share a phone line with anything other than another 2400 Series phone.
- Verify phone is in Standard Mode. See "Resetting the Phone" section for instructions.

Phone does not hang up:

- 2400 Series phones require either a CPC or Open-Loop Disconnect Signal provided by the phone line to properly disconnect. This is a setting on the line that the phone provider should be able to supply.
- Before the receiving party hangs up the call, they can press ***, #** to disconnect.
- Lower the Talk Time on the phone. This will not hang up the phone instantly, but it will lower the amount of time the phone will stay off-hook. See the "Detailed Programming" section for instructions.

Phone hangs up after the call is answered:

- Phone may be in the wrong mode. Verify the phone is in Standard Mode. See "Resetting the Phone" section for instructions.
- There may be excessive noise on the phone line. Connect an analog phone to the line and place a call out. Listen for any interference (buzzing, humming, etc.) on the line. If any noise is heard, the phone line must be cleaned up.
- Verify the phone line going into the 2400 Series phone is dedicated. 2400 Series phones cannot share a phone line with anything other than another 2400 Series phone.

Phone volume is too low:

- The volume level on the phone may need to be increased. See the "Volume Adjustment" section for instructions.
- Line voltage and line current on the phone may be too low. See the "System Requirements" section for the appropriate range.
- Verify the speaker is lined up with the holes on the panel and is not blocked.
- Verify the microphone is lined up with the holes on the panel and is not blocked.

APPENDIX H: Car Top Inspection Station

2019 Code Package Information

Units equipped with the 2019 or newer code will include additional components such as a Car Top Inspection Station (CTIS), a Car Top Prop, and a Door Lock Monitoring system (DLM) if selected.

For units that do not come with CTIS and Car Top Prop, a warning label will be affixed stating: "No work from the Car Top unless main power is disconnected". Authorized personnel must follow the instructions on the label when servicing in order to complies with ASME A17.1-2019, Section 5.3.1.3.3.

The Car Top Inspection Station (CTIS)

- The CTIS allowed for the ability to run the unit in inspection from the top of the unit.
- In addition to the station there is also a car top prop in order to create a safe space for the mechanic in the event of going up too high.

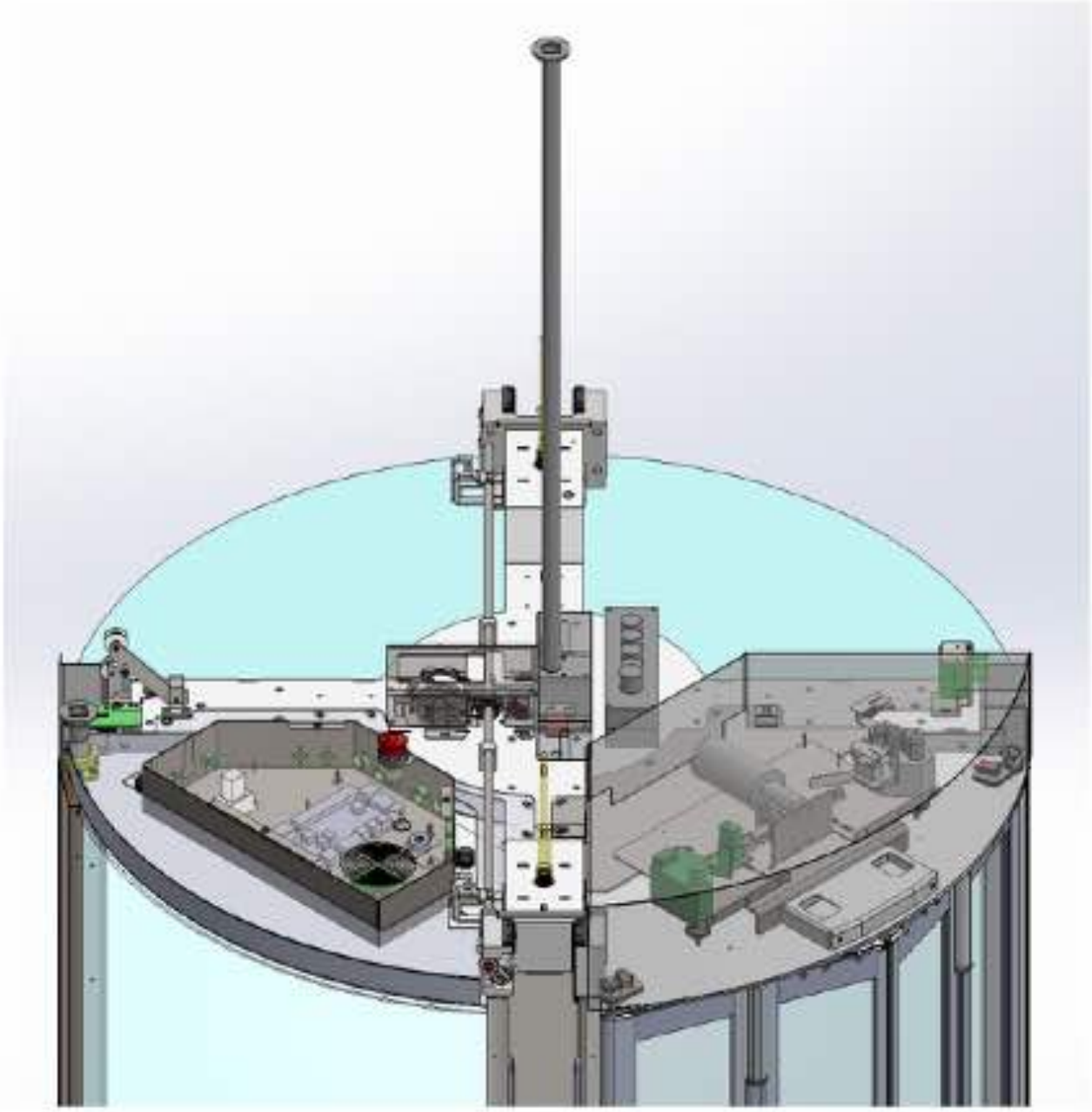

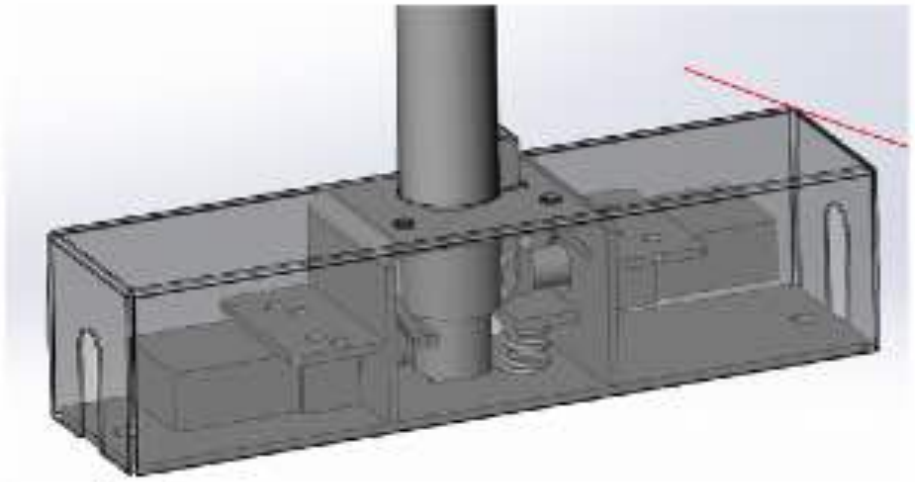

Storage when car top prop is not in use.

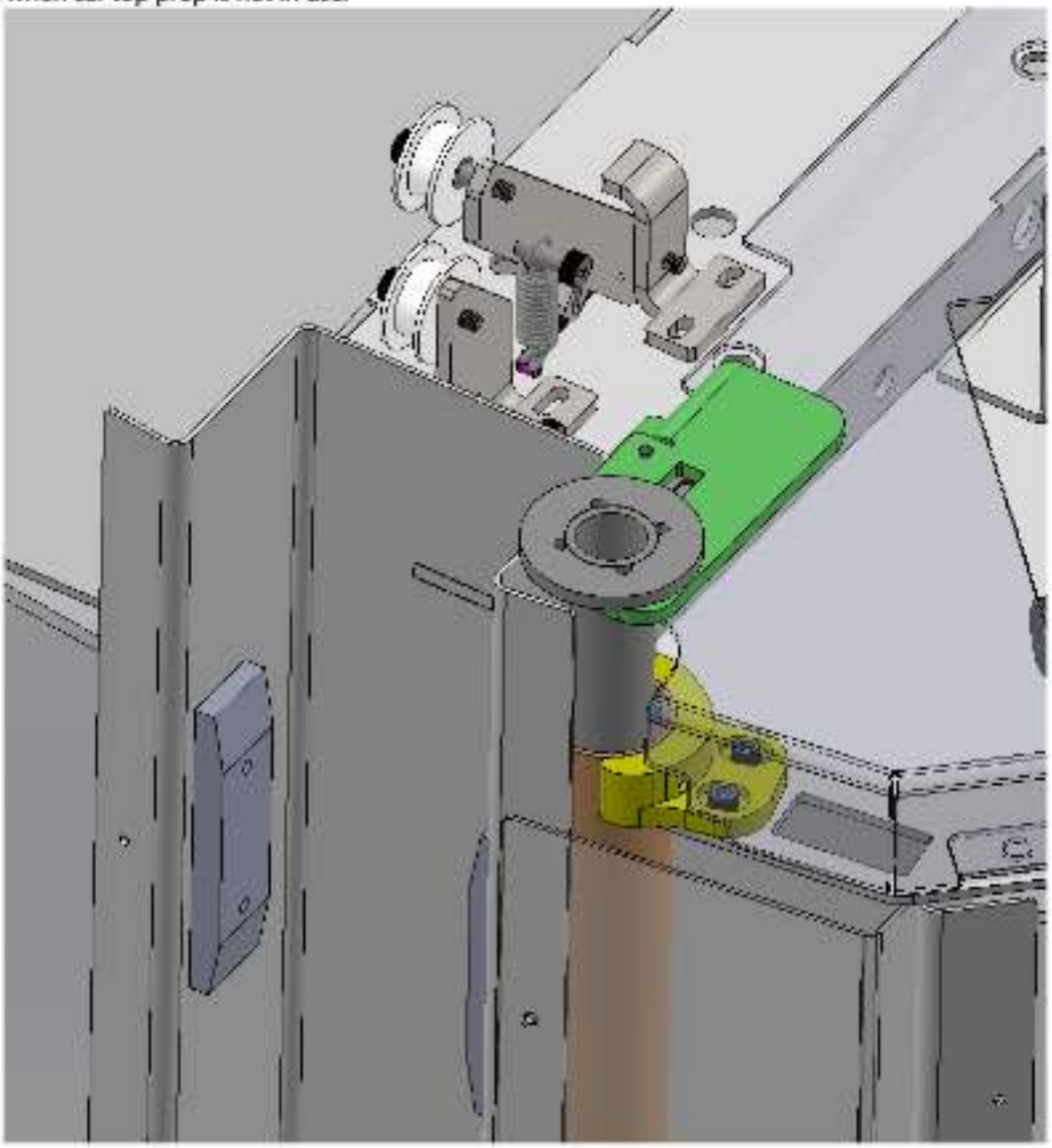

Vuelift Micro-6
INSTALLATION GUIDE
(Acrylic Models)

Part No. 001124, Rev 037
20-m05-2026
© Copyright 2026

Savaria Concord Lifts, Inc.
www.savaria.com

Support
2 Walker Drive
Brampton, Ontario, L6T 5E1, Canada
Toll free: (800) 791-7999
Fax: (905) 791-2222

savaria