savaria®

ZENITH & ORION MRL RESIDENTIAL MICRO-6 CONTROLLER

ELECTRICAL SCHEMATICS

CONTENTS

	PG
Disconnect Wiring Diagram	3
Disconnect Wiring Diagram by Others	4
Controller Connection Diagram	5
Car Top PCB 772392, Rev. 004 Connection Diagram and LEDs (Auto Fold - Porta 120 VAC Gate Operator)	6
Car Top PCB 772392, Rev. 004 Connection Diagram and LEDs (Auto Fold - Gatemate/Bifold 24 VDC Gate Operator)	7
Car Top PCB 772392, Rev. 004 Connection Diagram and LEDs (for Auto Slim Doors)	8
Landing Connection Diagram	9
Light or Fan Connection Diagram	10
Light Screen Connection Diagram	11
Controller PCB 772420 LEDs and Switches	12
Selector (Tape Reader) PCB 772391 Layout	13
COP Wiring	14
Lock Hook-up - Sheet 1	15
Lock Hook-up - Sheet 2	16
Controller PCB 772401 Schematic - Sheet 1	17
Controller PCB 772401 Schematic - Sheet 2	18
Controller PCB 772401 Schematic - Sheet 3	19
Controller PCB 772401 Schematic - Sheet 3	20
Controller PCB 772401 Schematic - Sheet 4	21
Controller PCB 772401 Schematic - Sheet 5	22
Controller PCB 772401 Schematic - Sheet 6	23
Controller PCB 772401 Schematic - Sheet 7	24
Controller PCB 772401 Schematic - Sheet 7 (with CTIS)	25
Controller PCB 772401 Schematic - Sheet 8	26
Controller PCB 772401 Schematic - Sheet 8 (with CTIS)	27
Controller PCB 772401 Schematic - Sheet 9	28
Controller PCB 772401 Schematic - Sheet 10 (24VDC Magnet)	29
Controller PCB 772401 Schematic - Sheet 10 (120V Transformer)	30
Clutch Motor Manual Lowering Wiring	31
Clutch Motor Manual Lowering Pigtail Wiring	32
Door Lock Monitoring PCB	33
Door Lock Monitoring PCB Wiring	34
OSG Monitor Assembly	35
OSG Power Harness	36
Luxury Flush Door Internal Wiring - Remote HC	37
Luxury Flush Door Internal Wiring	38
Luxury Flush Door Internal Wiring - Remote HC - Keyed	39
Luxury Flush Door Internal Wiring - Keyed	40
Luxury Flush Door Connection	41

Part No. 001397, Rev. 010 (11-m12-2024)

REVISION HISTORY

29-m05-2023	Initial release
16-m10-2023	Removed page A-11, Revised pages A-4, A-8, A-17 to A-29, A-32 and A-33. Added Door Lock Monitoring PCB on page 33,revised parts number
26-m10-2023	Revised pages A-17, A-19, A20 and A-23
27-m11-2023	Revised pages A-5 to A-7 and A-9
29-m02-2024	Revised page A-3, Added EMI Disconnect Wiring by Others on page A-4
28-m03-2024	Revised page A-20
17-m07-2024	Added Luxury Flush Door drawings on page
21-m08-2024	Revised page A-9
06-m09-2024	Revised page A-34
18-m09-2024	Revised pages 37-40, added DLM PCB on page 33
11-m12-2024	Revised pages A-37 to A-41

© 2024 Savaria Concord Lifts, Inc.

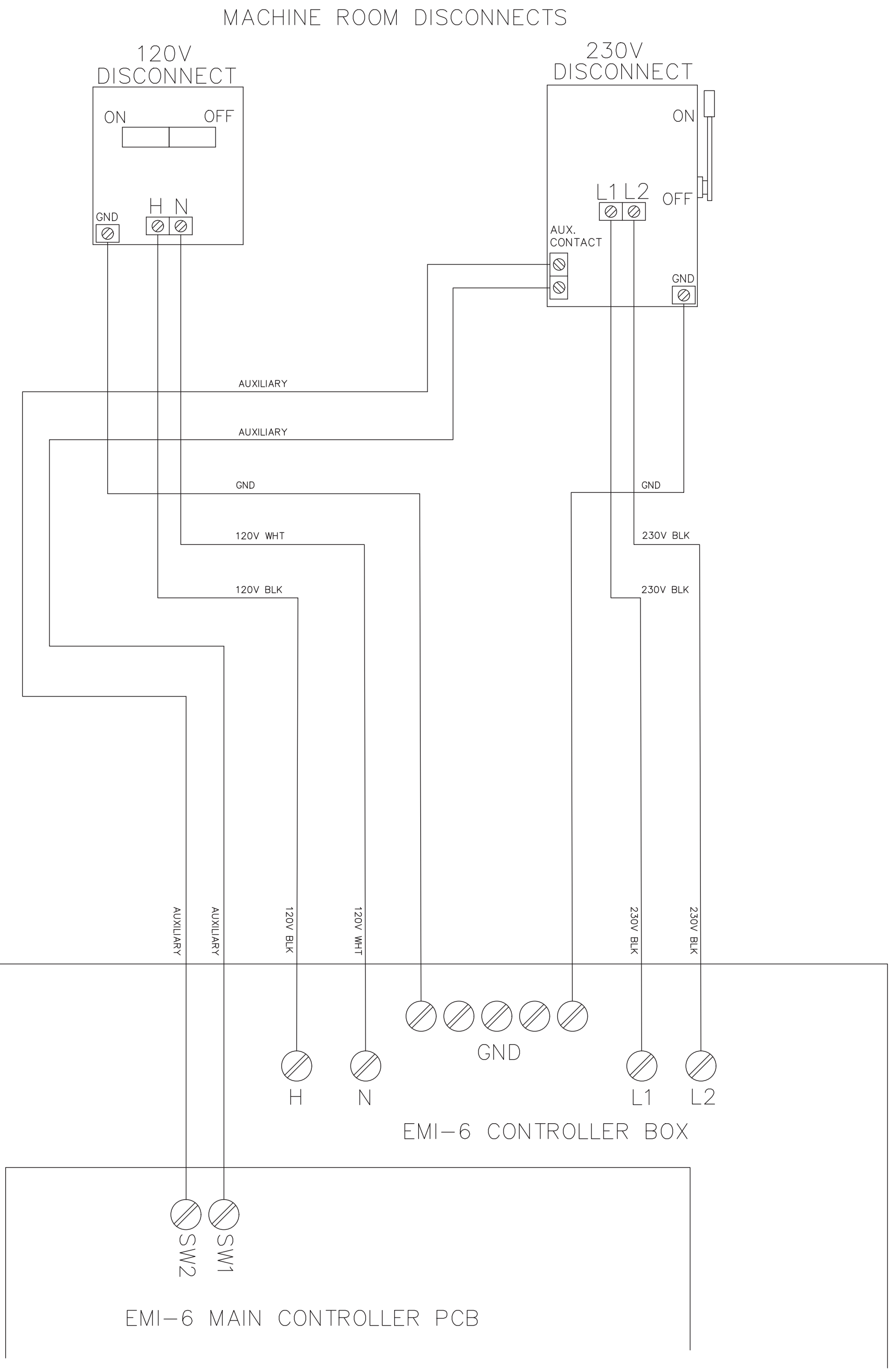

THE INFORMATION DISCLOSED HEREIN IS THE EXCLUSIVE PROPERTY OF savaria™ AND MAY NOT BE USED BY OTHERS WITHOUT PRIOR WRITTEN CONSENT

UNLESS OTHERWISE SPECIFIED ALL DIMENSIONS ARE IN INCHES. ALL DIMENSIONS IN [] ARE METRIC
TOLERANCES ON:
.X=±0.1 [.X=±3]
.XX=±0.03 [.XX=±0.8]
.XXX=±0.01 [.XXX=±0.25]
ANGLES X =±2.X =±0.5

DO NOT SCALE DRAWING

REMOVE ALL BURRS & SHARP CORNERS

TITLE:	DESIGNED BY:	DESIGN DATE:	SCALE:	REVISION:
EMI–6 CONTROLLER DISCONNECTS WIRING DIAGRAM			N/A	000
MATERIAL: N/A	DRAWN BY: HARSUMEET.S	DRAWN DATE: 02/27/24	DRAFTSPERSON: N/A	SIZE B
FINISH: N/A	SHEET 1 OF 1	DRAWING NO: EMI–6 DISCONNECTS		

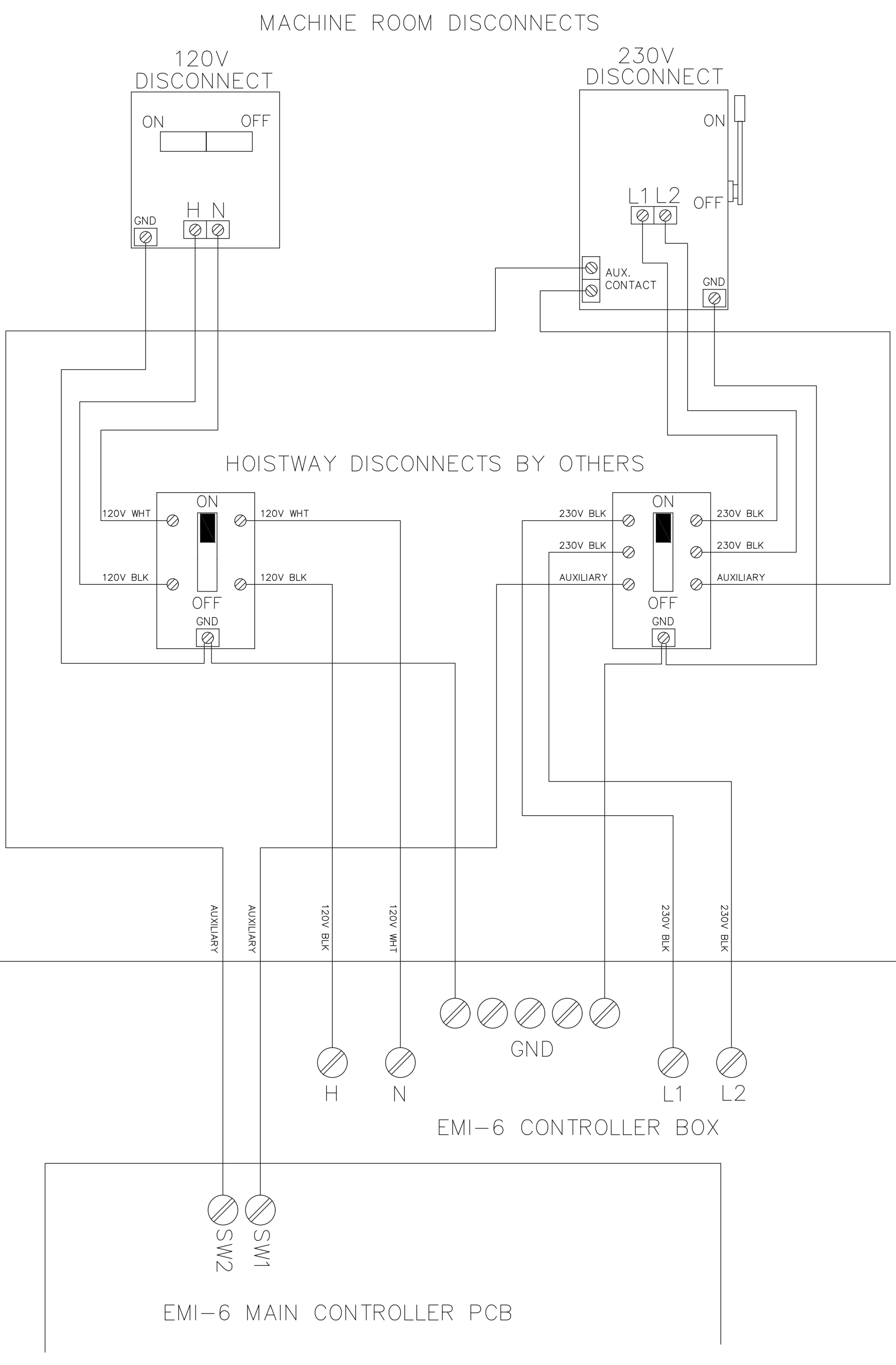

THE INFORMATION DISCLOSED HEREIN IS THE EXCLUSIVE PROPERTY OF savaria™ AND MAY NOT BE USED BY OTHERS WITHOUT PRIOR WRITTEN CONSENT

UNLESS OTHERWISE SPECIFIED ALL DIMENSIONS ARE IN INCHES. ALL DIMENSIONS IN [] ARE METRIC
TOLERANCES ON:
.X=±0.1 [.X=±3]
.XX=±0.03 [.XX=±0.8]
.XXX=±0.01 [.XXX=±0.25]
ANGLES X =±2.X =±0.5

DO NOT SCALE DRAWING

REMOVE ALL BURRS & SHARP CORNERS

TITLE:	MATERIAL:	FINISH:
EMI–6 CONTROLLER DISCONNECTS WIRING DIAGRAM BY OTHERS	N/A	N/A

DESIGNED BY:	DESIGN DATE:	SCALE:	REVISION:
		N/A	000

DRAWN BY:	DRAWN DATE:	DRAFTSPERSON:	SIZE
HARSUMEET.S	02/27/24	N/A	B

SHEET 1 OF 1

DRAWING NO: DISCONNECTS BY OTHERS

REVISIONS			
REV	ECO NO.	DATE	REVISED BY
000	C4	12/04/17	1ST RELEASE
001	C4	JUNE 25/19	JS
002	C4	NOV. 29/21	JS
003	ECO1903	JAN. 24/22	KP
004	2126	SEPT. 25/23	HARSUMEET.S

NOTE: Be sure to connect the 14AWG GREEN traveling cable wire to the chassis ground lug!

TO CAR TOP BOX
TCA-WHT
TCA-BLK
FLAT TC
TC-WHT
TC-BLK
ROUND TC

TO AUXILIARY SWITCH IN DISCONNECT

TO TELEPHONE COMPANY CONNECTION

savaria
P/N: 772420 G I
REV 000
S/N
SCTAL8.5 V2.0 *TAL*

J7 24N 24AC
J6 WHT14 BLK14
J5 ALS RP 110N N2 110 SW2 SW1 L N
J4 L1 L2 L2

J8 PH1 PH2
J9 TCRED TCWHT
J30 TC29 TC28 TC27
J10 TC26 TC25 TC24 TC23 DZ TC22 LU TC21 LD TC20 P3 TC19 P2 TC18 P1

AL EL RP BK

J3 V+ V- TC27 CC PT1 PT2 TC30 GC1 TC31 DO TC32

(002) - REMOVE TC30 AND TCA10-YEL FROM DRAWING. PI SERVICE INDICATOR CCT. (SVC RELAY) REMOVED.

(003) - DO NOT USE TERMINALS TC31 AND TC32.

TO CAR TOP BOX

FLAT TC / ROUND TC

TCB20-ORG TC29-BRN
TCB19-ORG TC28-BRN
TCB18-ORG TC27-BRN
TCB17-ORG TC26-BRN
TCB16-ORG TC25-BRN
TCB15-ORG TC24-BRN
TCB14-ORG TC23-BRN
TCB13-ORG TC22-BRN
TCB12-ORG TC21-BRN
TCB11-ORG TC20-ORG
TCB10-YEL TC19-ORG
TCB9-YEL TC18-ORG

TO HALL LANDING STATION POSITION INDICATORS

HALL STATION PI
J11 P- P+ P1 P2 P3

IF NO DLM, INSTALL JUMPER BETWEEN TC31A AND TC31B

J33 TC31B TC31A DC5 DC4 DC3 DC2 DC1 MSC BR+
NOT USED NOT USED NOT USED NOT USED NOT USED NOT USED NOT USED

TEMPORARY RUN BUTTONS J12

TO MOTOR ACCESS DOOR OR TEMP RUN BUTTONS

FL6 J28: HDC HDL 6EL
FL5 J27: DC DL 5EL
FL4 J26: DC DL 4EL
FL1 J23: DC DL 1EL
FL2 J24: DC DL 2EL
FL3 J25: DC DL 3EL

NOTE: INSTALLER TO WIRE TEMPORARY LOCK JUMPERS ON ALL 6 FLOORS 1-2, 3-4. JUMPERS ARE TO BE REMOVED AS EACH FLOOR IS HOOKED UP AND TESTED. FOR ECLIPSE, REMOVE FL6 JUMPER 3-4 AND WIRE END-OF-TRAVEL SWITCHES HERE.

⚠ WARNING ⚠
FAILURE TO REMOVE TEMPORARY JUMPERS PRIOR TO COMISSIONING THE LIFT MAY RESULT IN SERIOUS INJURY.

WHT BLK RED GRN BRN BLU ORG YEL VIO GRY PNK TAN

TO LANDING CALL STATION AND LOCK AND DOOR OPERATOR (ALL LANDINGS WIRED SIMILARLY)

FLAT TC / ROUND TC

TCB8-YEL TC17-ORG
TCB7-YEL TC16-ORG
TCB6-YEL TC15-ORG
TCB5-YEL TC14-ORG
TCB4-YEL TC13-ORG
TCB3-YEL TC12-ORG
TCB2-YEL TC11-ORG
TCB1-YEL TC10-YEL
TCA9-YEL TC9-YEL
TCA8-YEL TC8-YEL
TCA7-YEL TC7-YEL
TCA6-YEL TC6-YEL
TCA5-YEL TC5-YEL
TCA4-YEL TC4-YEL
TCA3-YEL TC3-YEL
TCA2-YEL TC2-YEL
TCA1-YEL TC1-YEL

TO CAR TOP BOX

J13 TC17 6C TC16 5C TC15 4C TC14 3C TC13 2C TC12 1C TC11 TC10
J14 TC9 DPF TC8 DPR TC7 BZ TC6 UT TC5 LT
J15 TC4 TC3 GC TC2 MSC TC1
J16 MAD2 MAD1
J17 PS2 PS1
J18 LPS2 LPS1

TO MOTOR ACCESS DOOR
GRY
VIO
TO PIT SWITCH
BLK
BLU
#5
#6

TO OPTIONAL CAR TOP INSPECTION STATION (ECLIPSE)

NOTE: TO USE TEMPORARY RUN BUTTONS (001)
CONNECT TEMPORARY JUMPERS BETWEEN: TC4 & TC5, TC4 & TC6, AND TC11 & FL6.4
FACTORY INSTALLED TEMPORARY JUMPERS: TC10 & TC13, TC13 & TC15, AND TC15 & TC17

⚠ WARNING ⚠
FAILURE TO REMOVE TEMPORARY JUMPERS PRIOR TO COMISSIONING THE LIFT MAY RESULT IN SERIOUS INJURY.
CYCLE POWER VIA THE UPS WHILE HOLDING P-TOOL 1, 5, AND 0 TO ENTER TEMP MODE
PRESS P-TOOL "A" TO MOVE UP SLOW, "A" AND "B" TO MOVE UP FAST
PRESS P-TOOL "D" TO MOVE DOWN SLOW, "D" AND "B" TO MOVE DOWN FAST
TO EXIT TEMPORARY MODE, CYCLE THE POWER
USE THE SAVARIA TEMPORARY RUN BUTTONS AS NORMAL WHILE IN TEMP MODE

GCR HS DN UP

NOTE: FOR INFINITY, CONNECT JUMPER BETWEEN MAD1 AND MAD2

NOTE: FOR ECLIPSE, LPS1 - LPS2 TURNS ON OPTIONAL CAR TOP INSPECTION STATION. FOR INFINITY, LPS1 - LPS2 IS FOR THE NEGATIVE PRESSURE SWITCH. THE PARAMETER "HYDRAULIC APP" MUST BE TURNED ON (1) BEFORE CONNECTING THESE WIRES.

J2 WiFi
TO LUT500 WIFI PCB

DE
J19 DE1 DE2
J20 11 10 9 8 7 6 2 VC
J21 DS6 DS7 PV8 PV9 HSC DN UP
J22 BR+ BR- M14 M13 -V2 +V2

P-TOOL J1
P-TOOL JACK

#4 #3 #2 #1
TO VALVE BLOCK

THE INFORMATION DISCLOSED HEREIN IS THE EXCLUSIVE PROPERTY OF savaria™ AND MAY NOT BE USED BY OTHERS WITHOUT PRIOR WRITTEN CONSENT

TITLE: EMI-6 CONTROLLER MAIN CONTROLLER CONNECTION DIAGRAM (ECL)

UNLESS OTHERWISE SPECIFIED ALL DIMENSIONS ARE IN INCHES. ALL DIMENSIONS IN [] ARE METRIC
TOLERANCES ON:
.X=±0.1 [.X=±3]
.XX=±0.03 [.XX=±0.8]
.XXX=±0.01 [.XXX=±0.25]
ANGLES X =±2.X =±0.5

MATERIAL: N/A
FINISH: N/A

DO NOT SCALE DRAWING
REMOVE ALL BURRS & SHARP CORNERS

DESIGNED BY:	DESIGN DATE:	SCALE:	REVISION:
		N/A	004
DRAWN BY: C. QUIRK	DRAWN DATE: 12/04/17	DRAFTSPERSON: N/A	
SHEET 1 OF 1	DRAWING NO: EMI-6 CONTROLLER-SCTAL-8.5		SIZE B

AUTO PANEL FOLD
(Porta 120 Vac Gate Operator)

LED	Description
LED1	Selector P1 positioning input indicator
LED2	Selector P2 positioning input indicator
LED3	Selector P3 positioning input indicator
LED4	Selector DL (down levelling) input indicator
LED5	Selector UL (up levelling) input indicator
LED6	Selector DZ (door zone) input indicator
LED7	Selector POWER (+24V) indicator

REVISIONS

REV	ECO NO.	DATE	REVISED BY
000	C4	01/18/11	1ST RELEASE
001	C4	03/15/12	CQ
004	C4	05/22/14	CQ
005	C4	10/27/14	CQ
006	C4	12/17/15	CQ
008	C4	04/18/18	CQ
009	C4	04/20/18	JS
010	C4	JUNE 25/19	JS
011	RI1414	NOV. 18/21	JS
012	2126	NOV. 27/23	H.S

IMPORTANT!
Confirm voltage of gate operator
before changing any car top wiring.

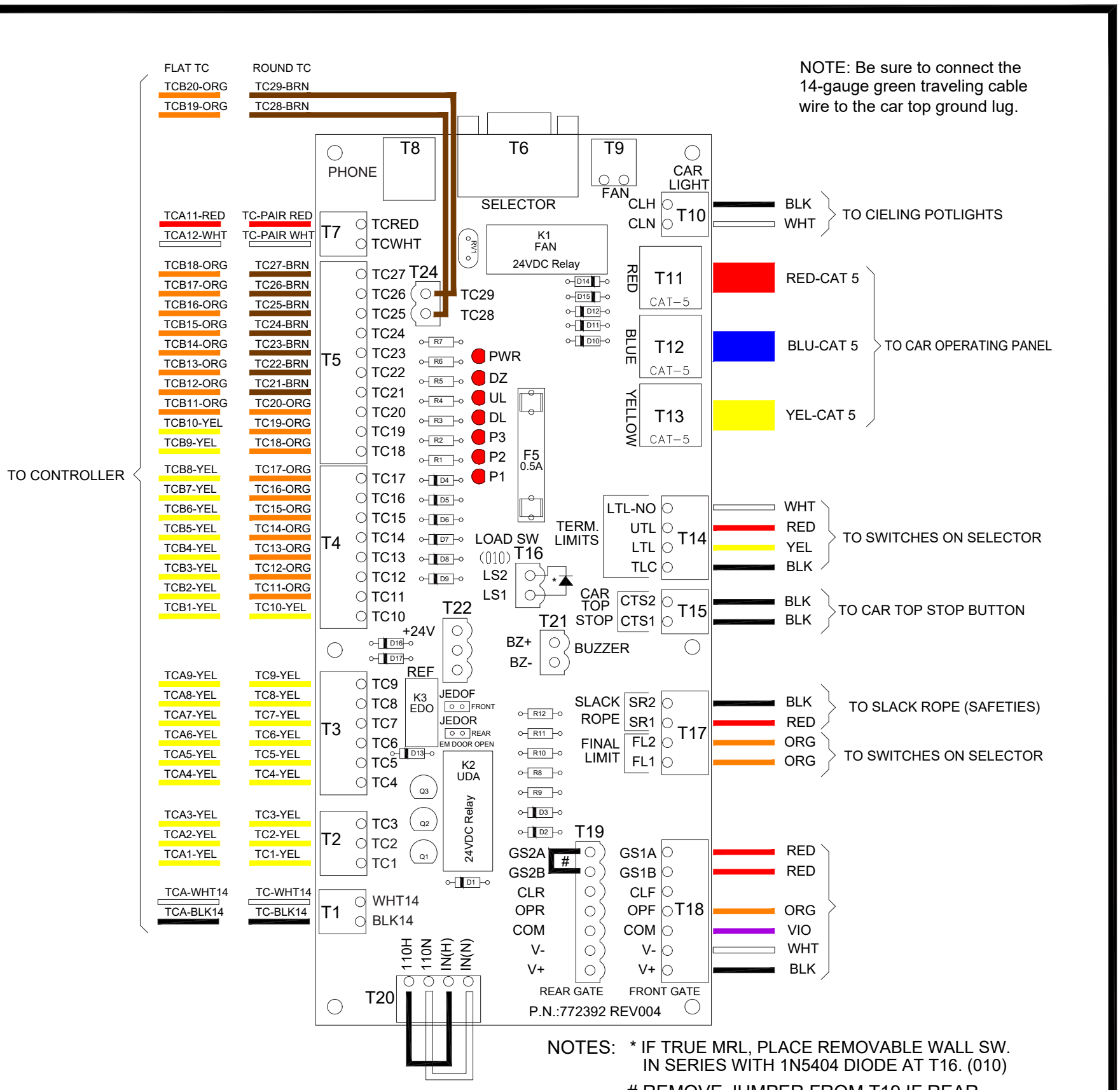

NOTE: Be sure to connect the 14-gauge green traveling cable wire to the car top ground lug.

NOTES: * IF TRUE MRL, PLACE REMOVABLE WALL SW. IN SERIES WITH 1N5404 DIODE AT T16. (010)

REMOVE JUMPER FROM T19 IF REAR GATE OPERATOR IS REQUIRED

(011) NOTE: PI SERVICE INDICATOR CIRCUIT (SVC RELAY) REMOVED.

THE INFORMATION DISCLOSED HEREIN IS THE EXCLUSIVE PROPERTY OF savaria™ AND MAY NOT BE USED BY OTHERS WITHOUT PRIOR WRITTEN CONSENT

UNLESS OTHERWISE SPECIFIED ALL DIMENSIONS ARE IN INCHES. ALL DIMENSIONS IN [ ] ARE METRIC
TOLERANCES ON:
.X=±0.1 [.X=±3]
.XX=±0.03 [.XX=±0.8]
.XXX=±0.01 [.XXX=±0.25]
ANGLES X =±2.X =±0.5

DO NOT SCALE DRAWING | REMOVE ALL BURRS & SHARP CORNERS

TITLE:	MATERIAL:	FINISH:
EMI-6 CONTROLLER CAR TOP BOX-MANUAL CONNECTION DIAGRAM	N/A	N/A

DESIGNED BY:	DESIGN DATE:	SCALE:	REVISION:
		N/A	012

DRAWN BY:	DRAWN DATE:	DRAFTSPERSON:	SIZE
C. QUIRK	01/18/11	N/A	B

SHEET 1 OF 1 | DRAWING NO: EMI-6 CAR TOP

AUTO PANEL FOLD
(Gatemate and Bifold 24 Vdc Gate Operator)

LED	Description
LED1	Selector P1 positioning input indicator
LED2	Selector P2 positioning input indicator
LED3	Selector P3 positioning input indicator
LED4	Selector DL (down levelling) input indicator
LED5	Selector UL (up levelling) input indicator
LED6	Selector DZ (door zone) input indicator
LED7	Selector POWER (+24V) indicator

REVISIONS

REV	ECO NO.	DATE	REVISED BY
000	C4	01/18/11	1ST RELEASE
001	C4	03/15/12	CQ
004	C4	05/22/14	CQ
005	C4	10/27/14	CQ
006	C4	12/17/15	CQ
007	C4	10/20/16	CQ
008	C4	04/18/18	CQ
009	C4	04/20/18	JS
010	C4	JUNE 25/19	JS
011	RI1414	NOV. 18/21	JS
012	2126	NOV. 27/23	H.S

IMPORTANT!
Confirm voltage of gate operator
before changing any car top wiring.

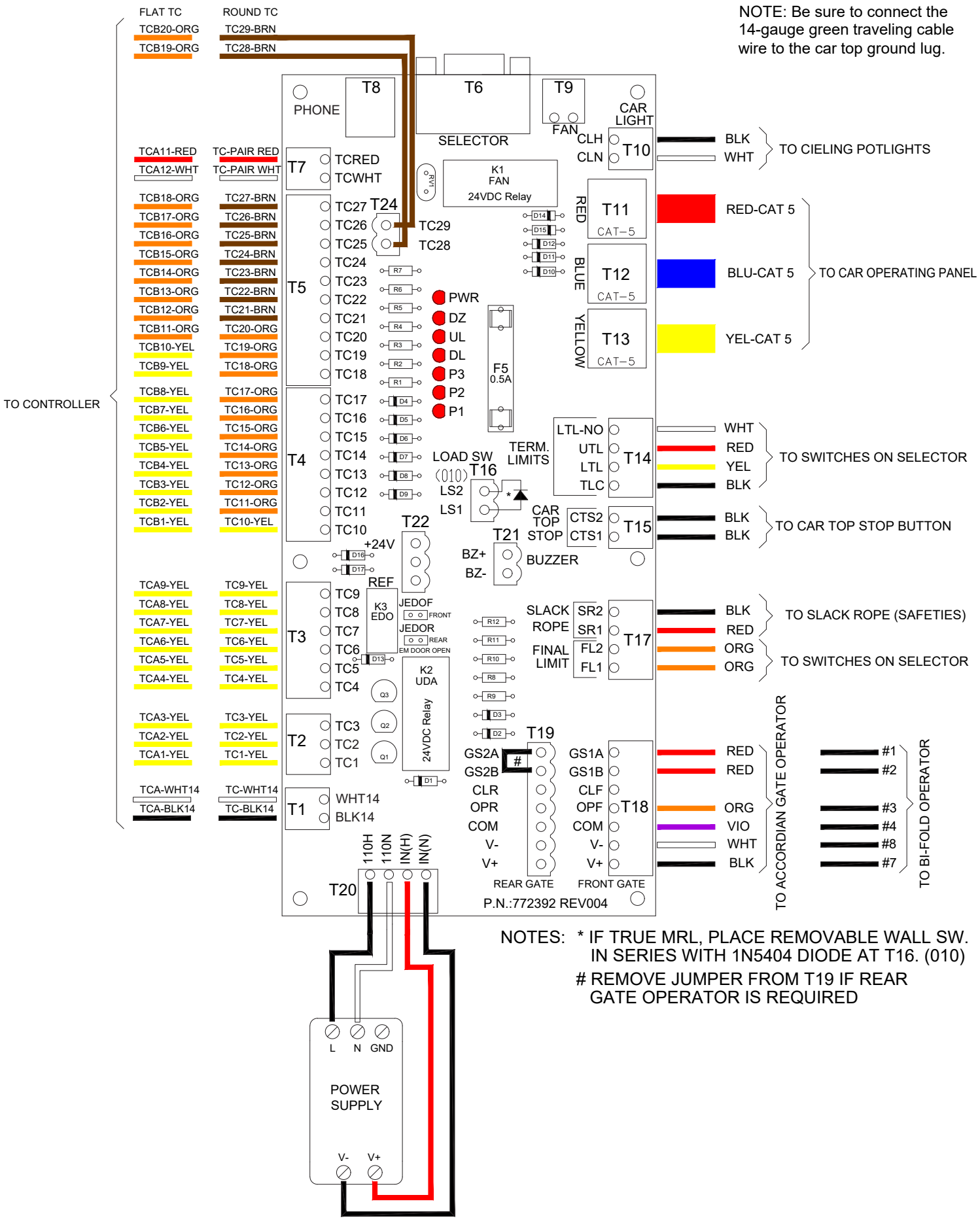

NOTES: * IF TRUE MRL, PLACE REMOVABLE WALL SW. IN SERIES WITH 1N5404 DIODE AT T16. (010)
REMOVE JUMPER FROM T19 IF REAR GATE OPERATOR IS REQUIRED

(011) NOTE: PI SERVICE INDICATOR CIRCUIT (SVC RELAY) REMOVED.

THE INFORMATION DISCLOSED HEREIN IS THE EXCLUSIVE PROPERTY OF savaria™ AND MAY NOT BE USED BY OTHERS WITHOUT PRIOR WRITTEN CONSENT

UNLESS OTHERWISE SPECIFIED ALL DIMENSIONS ARE IN INCHES. ALL DIMENSIONS IN [] ARE METRIC
TOLERANCES ON:
.X=±0.1 [.X=±3]
.XX=±0.03 [.XX=±0.8]
.XXX=±0.01 [.XXX=±0.25]
ANGLES X =±2.X =±0.5

DO NOT SCALE DRAWING | REMOVE ALL BURRS & SHARP CORNERS

TITLE: EMI-6 CONTROLLER CAR TOP BOX-AUTOMATIC CONNECTION DIAGRAM

MATERIAL:	DESIGNED BY:	DESIGN DATE:	SCALE:	REVISION:
N/A			N/A	012
FINISH:	DRAWN BY:	DRAWN DATE:	DRAFTSPERSON:	SIZE
N/A	C. QUIRK	01/18/11	N/A	B
	SHEET 1 OF 1		DRAWING NO: EMI-6 CAR TOP	

REVISIONS			
REV	ECO NO.	DATE	REVISED BY
000	C4	05/22/14	1ST RELEASE
002	C4	JUNE 25/19	JS
003	2126	NOV. 27/23	H.S

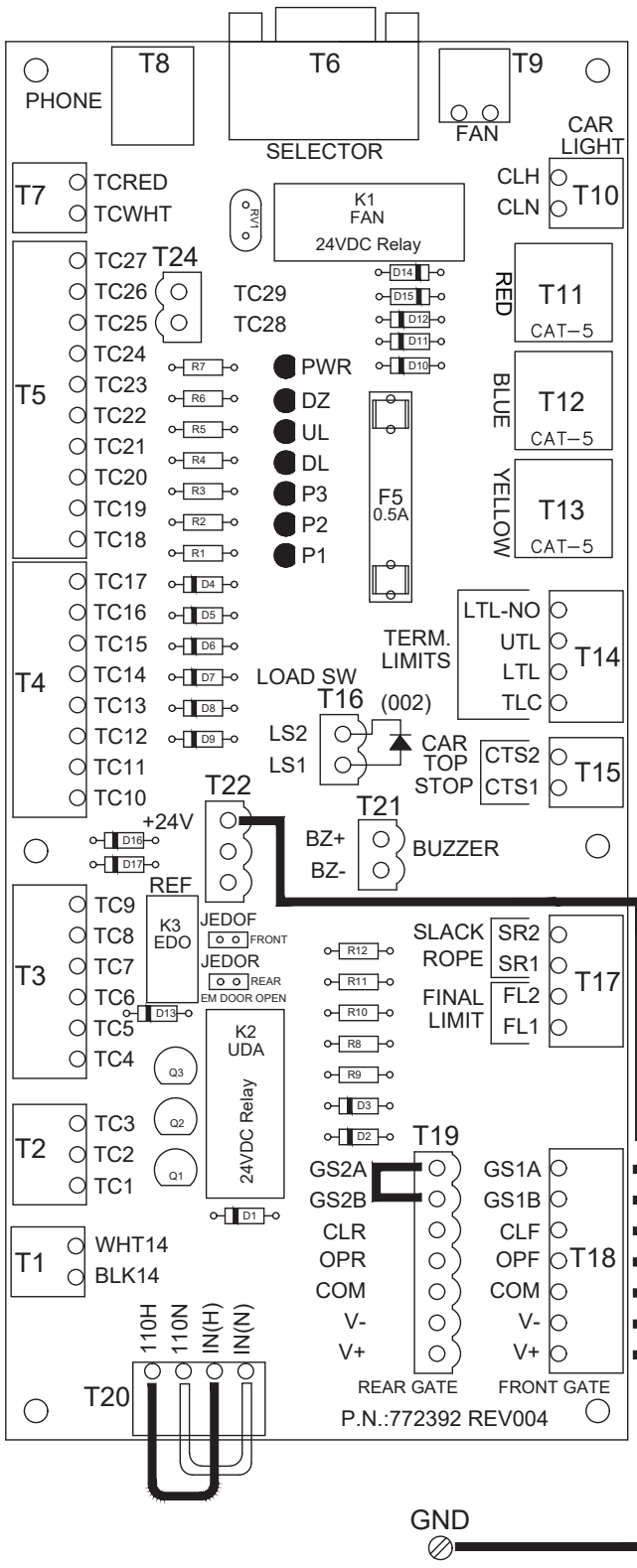

NOTES: TO ENABLE EMERGENCY DOOR OPEN (IN CASE THE CAR IS ENTERED WITHOUT A KEY) PLACE A JUMPER SHUNT ON JEDOF FOR THE FRONT DOOR AND JEDOR FOR THE REAR DOOR.

THIS WILL CAUSE THE ALARM BUTTON TO GENERATE A DOOR OPEN SIGNAL.

RED (+24V)
BLU (GS1A/GS2A)
BRN (GS1B/GS2B)
TO D2 CONNECTOR IN OPERATOR
GRN 20AWG (CLF/CLR)
WHT 20AWG (OPF/OPR)
BLK 20AWG (COM)
TO T1 CONNECTOR ON OPERATOR INTERFACE PCB
WHT 14AWG (120V-N)
BLK 14AWG (120V-H)
GRN 14AWG (GND)
TO D1 CONNECTOR IN OPERATOR

THE INFORMATION DISCLOSED HEREIN IS THE EXCLUSIVE PROPERTY OF savaria™ AND MAY NOT BE USED BY OTHERS WITHOUT PRIOR WRITTEN CONSENT

UNLESS OTHERWISE SPECIFIED ALL DIMENSIONS ARE IN INCHES. ALL DIMENSIONS IN [] ARE METRIC
TOLERANCES ON:
.X=±0.1 [.X=±3]
.XX=±0.03 [.XX=±0.8]
.XXX=±0.01 [.XXX=±0.25]
ANGLES X =±2.X =±0.5

DO NOT SCALE DRAWING | REMOVE ALL BURRS & SHARP CORNERS

TITLE: EMI–6 CONTROLLER AUTO SLIM DOORS CONNECTION DIAGRAM

DESIGNED BY:	DESIGN DATE:	SCALE:	REVISION:
		N/A	003
MATERIAL: N/A	DRAWN BY: C. QUIRK	DRAWN DATE: 05/22/14	DRAFTSPERSON: N/A
FINISH: N/A	SHEET 1 OF 1	DRAWING NO: EMI–6 AUTO SLIM DOORS	SIZE B

REVISIONS			
REV	ECO NO.	DATE	REVISED BY
008	C4	05/14/18	JS
009	C4	08/17/21	JS

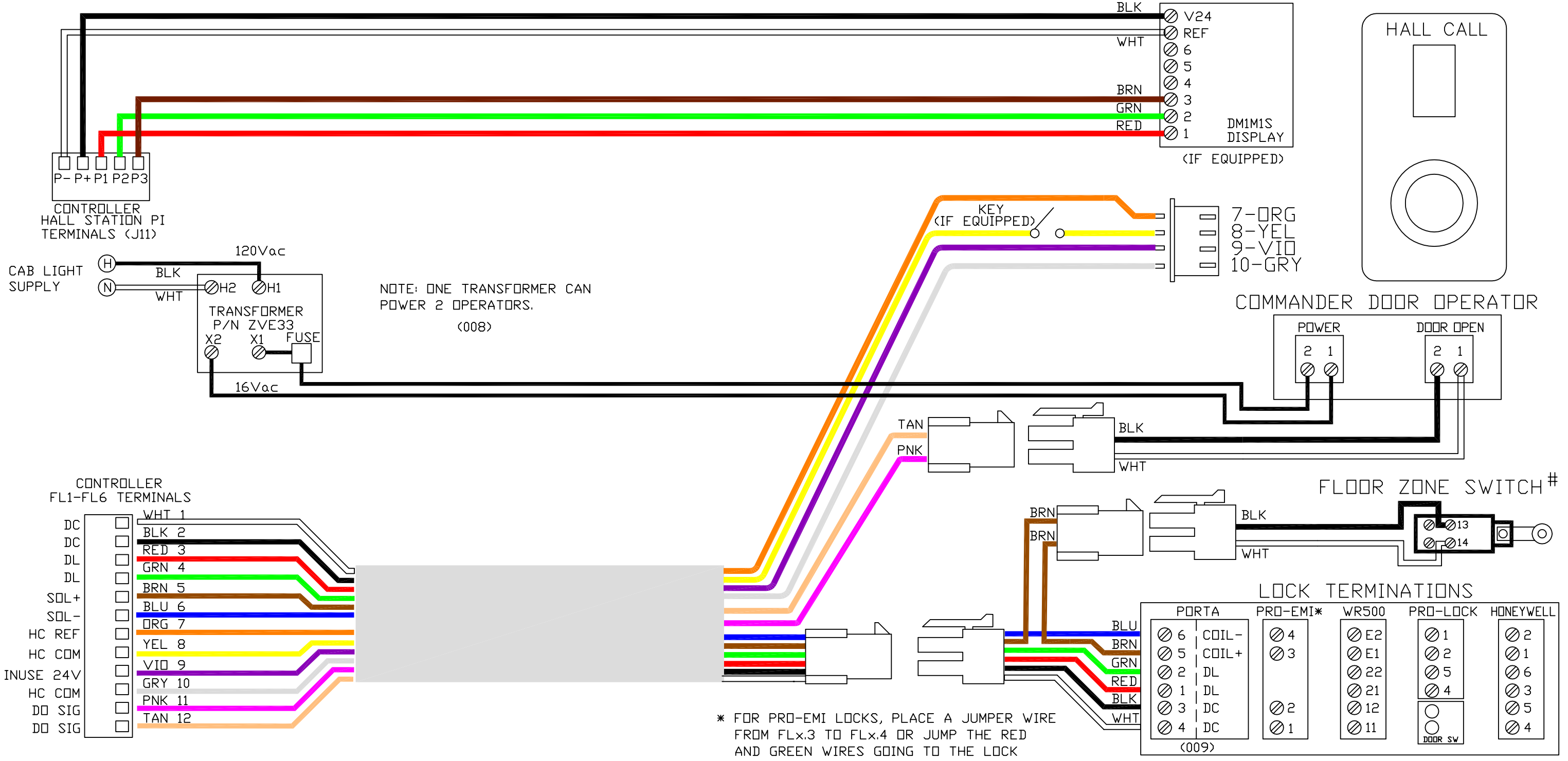

* FOR PRO-EMI LOCKS, PLACE A JUMPER WIRE FROM FLx.3 TO FLx.4 OR JUMP THE RED AND GREEN WIRES GOING TO THE LOCK

FLOOR ZONE SWITCHES

1. MANDATORY WHEN USING ANY ELECTRIC LOCKS.
2. N.O. SWITCH CONTACT ACTIVATED BY A CAM MOUNTED ON THE CAR SLING.
3. NOT REQUIRED IF AUTO-SLIM DOORS ARE IN USE.

THE INFORMATION DISCLOSED HEREIN IS THE EXCLUSIVE PROPERTY OF savaria™ AND MAY NOT BE USED BY OTHERS WITHOUT PRIOR WRITTEN CONSENT

TITLE: EMI-6 CONTROLLER LANDING CONNECTIONS DIAGRAM

UNLESS OTHERWISE SPECIFIED ALL DIMENSIONS ARE IN INCHES. ALL DIMENSIONS IN [] ARE METRIC
TOLERANCES ON:
.X=±0.1 [.X=±3]
.XX=±0.03 [.XX=±0.8]
.XXX=±0.01 [.XXX=±0.25]
ANGLES X =±2.X =±0.5

MATERIAL: N/A

FINISH: N/A

DO NOT SCALE DRAWING

REMOVE ALL BURRS & SHARP CORNERS

DESIGNED BY:	DESIGN DATE:	SCALE:	REVISION:
		N/A	009
DRAWN BY:	DRAWN DATE:	DRAFTSPERSON:	
C. QUIRK	01/10/11	N/A	
SHEET 1 OF 1		DRAWING NO: EMI-6 LANDING	SIZE B

REVISIONS			
REV	ECO NO.	DATE	REVISED BY
000	C4	11/12/12	1ST RELEASE
001	C4	05/22/14	C.Q.
002	C4	11/03/15	C.Q.
003	C4	05/02/16	C.Q.
004	C4	JUNE 25/19	JS
005	2126	NOV. 27/23	H.S

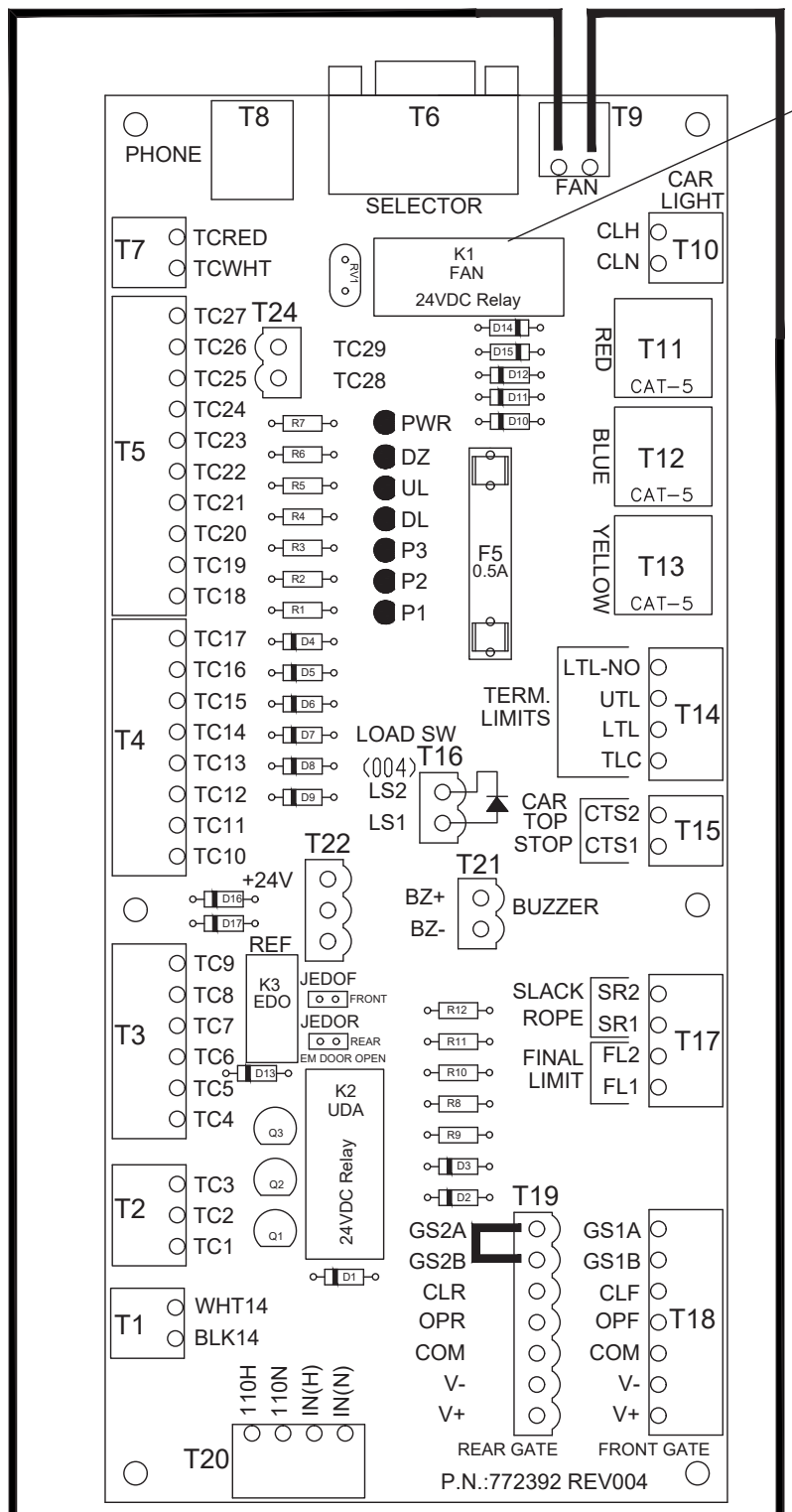

NOTE: MUST INSTALL 24VDC RELAY IN FAN RELAY SOCKET (P/N 641062)

NOTE: USE HARNESS #326054

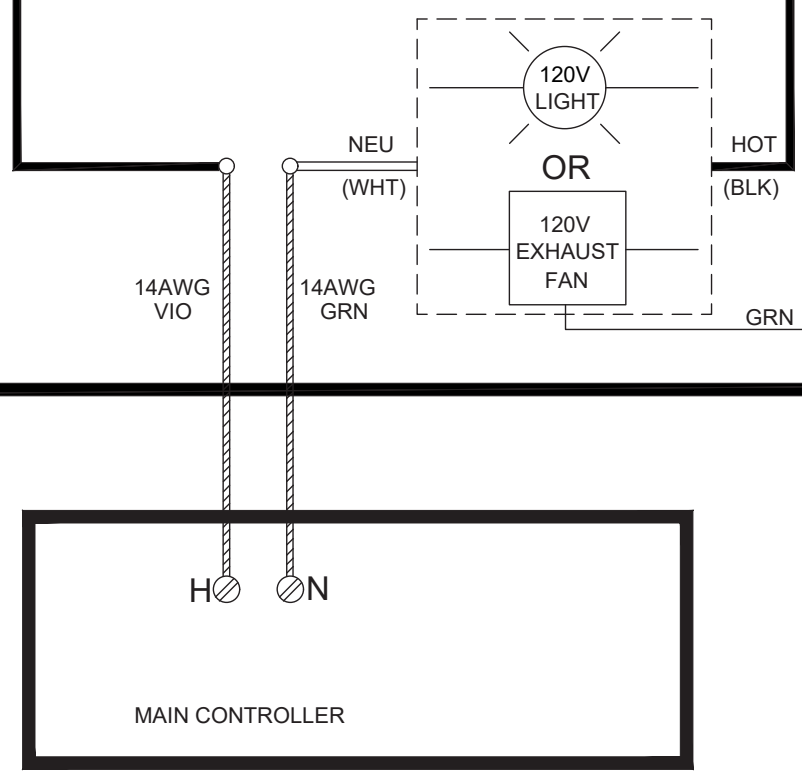

THE INFORMATION DISCLOSED HEREIN IS THE EXCLUSIVE PROPERTY OF savaria™ AND MAY NOT BE USED BY OTHERS WITHOUT PRIOR WRITTEN CONSENT

UNLESS OTHERWISE SPECIFIED ALL DIMENSIONS ARE IN INCHES. ALL DIMENSIONS IN [] ARE METRIC
TOLERANCES ON:
.X=±0.1 [.X=±3]
.XX=±0.03 [.XX=±0.8]
.XXX=±0.01 [.XXX=±0.25]
ANGLES X =±2.X =±0.5

DO NOT SCALE DRAWING | REMOVE ALL BURRS & SHARP CORNERS

DESIGNED BY:	DESIGN DATE:	SCALE: N/A	REVISION: 005
DRAWN BY: C. QUIRK	DRAWN DATE: 11/12/12	DRAFTSPERSON: N/A	
MATERIAL: N/A			SIZE B
FINISH: N/A	SHEET 1 OF 1	DRAWING NO: EMI–6 FAN–LIGHT	

TITLE: EMI–6 CONTROLLER 120V FAN OR LIGHT CONNECTION DIAGRAM

REVISIONS			
REV	ECO NO.	DATE	REVISED BY
000	C4	10/20/14	1ST RELEASE

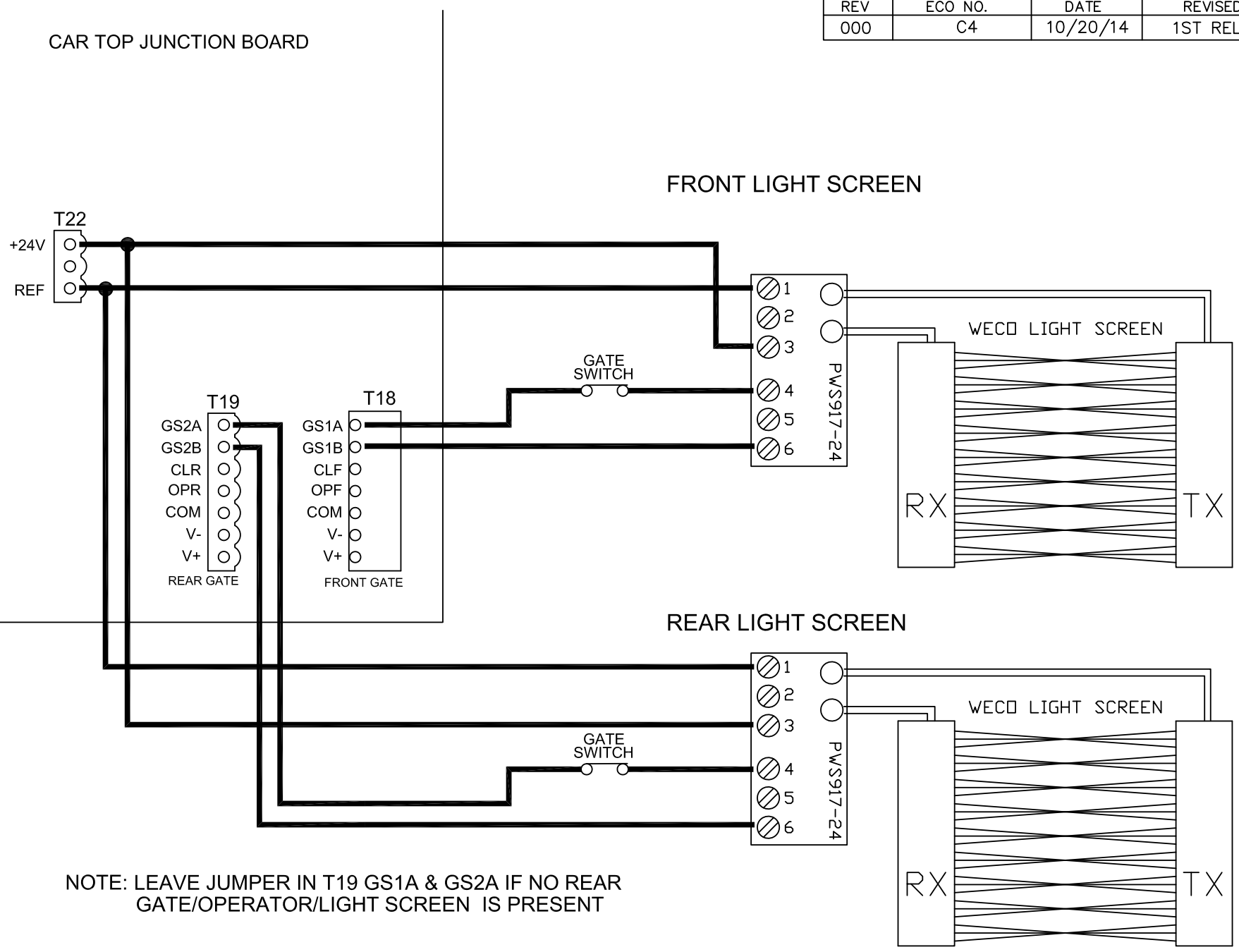

NOTE: LEAVE JUMPER IN T19 GS1A & GS2A IF NO REAR GATE/OPERATOR/LIGHT SCREEN IS PRESENT

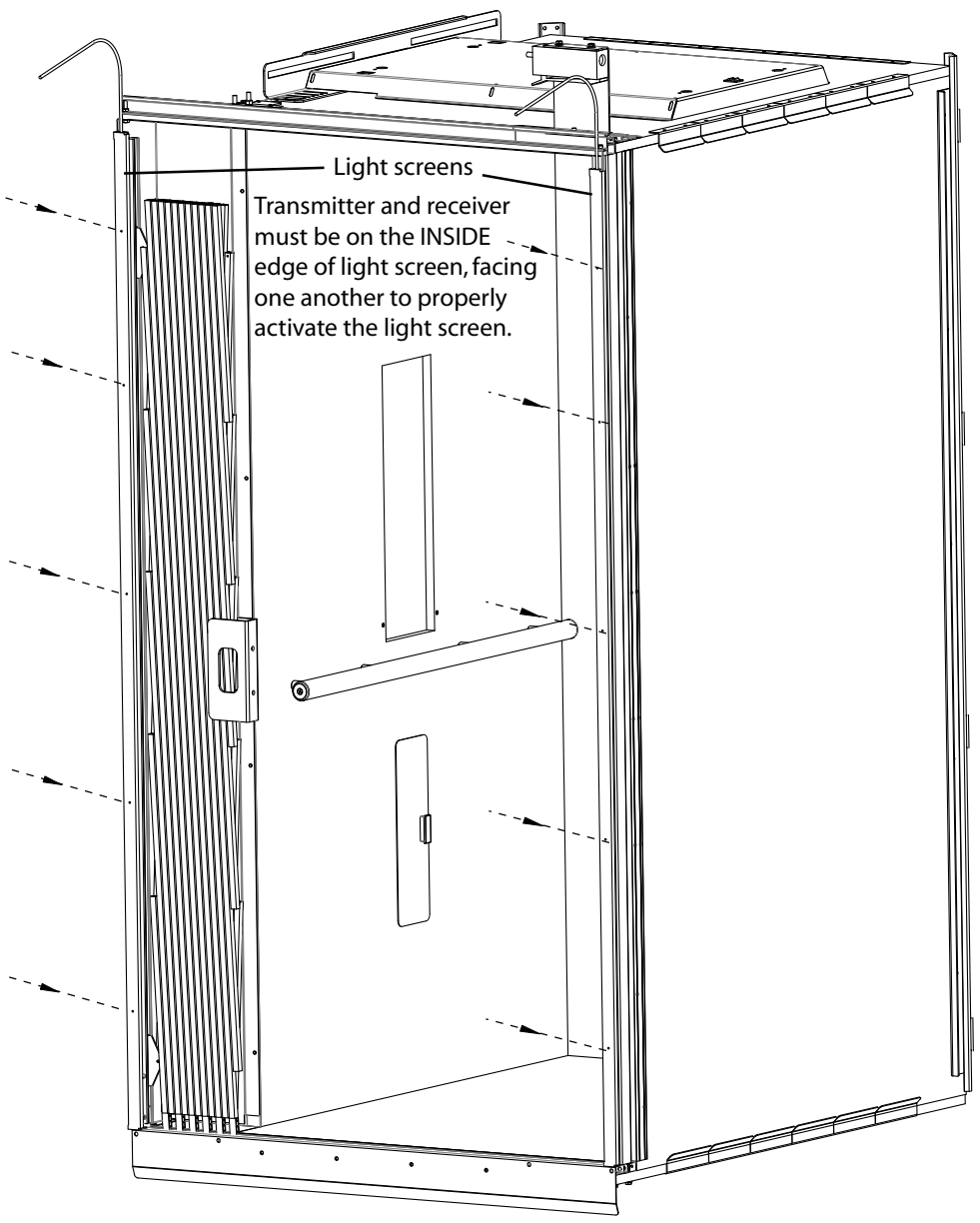

NOTES

1. You must install the light screens on the cab BEFORE building the cab.
2. Before attaching the light screens, you must determine which is the ACTIVE side and which is the DEAD side. If you slide your hand along the edge of the active side, you can feel the transmitter/receiver in the groove of the light screen. The groove on the other side is empty.
3. It is critical that the light screen transmitter and receiver are pointed directly at one another, facing one another so the light screen will activate properly.

THE INFORMATION DISCLOSED HEREIN IS THE EXCLUSIVE PROPERTY OF savaria™ AND MAY NOT BE USED BY OTHERS WITHOUT PRIOR WRITTEN CONSENT

UNLESS OTHERWISE SPECIFIED ALL DIMENSIONS ARE IN INCHES. ALL DIMENSIONS IN [] ARE METRIC
TOLERANCES ON:
.X=±0.1 [.X=±3]
.XX=±0.03 [.XX=±0.8]
.XXX=±0.01 [.XXX=±0.25]
ANGLES X =±2.X =±0.5

DO NOT SCALE DRAWING | REMOVE ALL BURRS & SHARP CORNERS

DESIGNED BY:	DESIGN DATE:	SCALE:	REVISION:
		N/A	000
DRAWN BY:	DRAWN DATE:	DRAFTSPERSON:	
C. QUIRK	10/20/14	N/A	

TITLE: EMI–6 CONTROLLER LIGHT SCREEN CONNECTION DIAGRAM

MATERIAL: N/A

FINISH: N/A

SHEET 1 OF 1

DRAWING NO: EMI–6 LIGHT SCREENS

SIZE B

Controller PCB (P/N 772401) LEDs and Switches

LED	Description
DZ	Selector door zone indicator
UL	Selector up levelling indicator
DL	Selector down levelling indicator
P3	Selector P3 positioning (binary) indicator
P2	Selector P2 positioning (binary) indicator
P1	Selector P1 positioning (binary) indicator
AL	Cab lighting indicator
EL	Emergency light indicator
RP	Run pilot indicator
DC2	Fuse 2 status indicator
DC3	Fuse 3 status indicator
DC4	Fuse 4 status indicator
PT2	Overload/VFD status input indicator
CC	Motor auxiliary input indicator
TC27NLD	reset confirmation indicator
1EL - 6EL	Electric lock output indicators
DC	Doors closed contacts input indicator
DL	Doors locked contacts input indicator
HDC	All doors closed input indicator
HDL	All doors locked input indicator
1C	Floor 1 call input indicator
2C	Floor 2 call input indicator
3C	Floor 3 call input indicator
4C	Floor 4 call input indicator
5C	Floor 5 call input indicator
6C	Floor 6 call input indicator
OPF	Door open front input indicator
OPR	Door open rear input indicator
BZ	Buzzer output indicator
UT	Normal limit up input indicator
LT	Normal limit down input indicator
GC	Gates closed input indicator
MSC	Main safety chain input indicator
LPS1	Low pressure switch input indicator (Hydraulic)
	Optional car top inspection indicator (Eclipse only)
DE	Drive enable indicator
LE	Levelling indicator
HS	High speed indicator
DN	Down direction indicator
UP	Up direction indicator
OK	Watchdog input indicator
BK	Brake Relay Indicator
GCR	Gates closed relay indicator
GC1	Gate 1 closed indicator
DO	Door Open button indicator

Switch	Description
SW1	Set to GEAR for geared controller
	Set to HYDRO for hydraulic controller

Selector PCB (P/N 772391) Layout

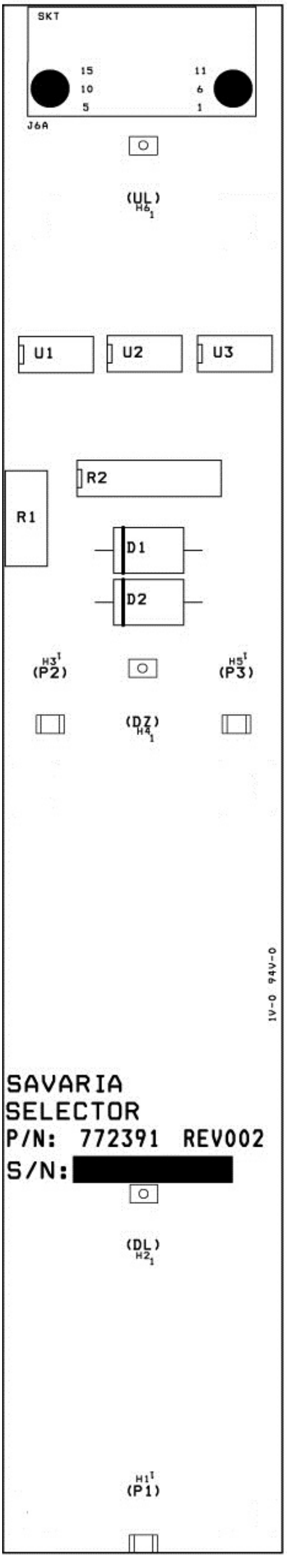

Sensor Spacing

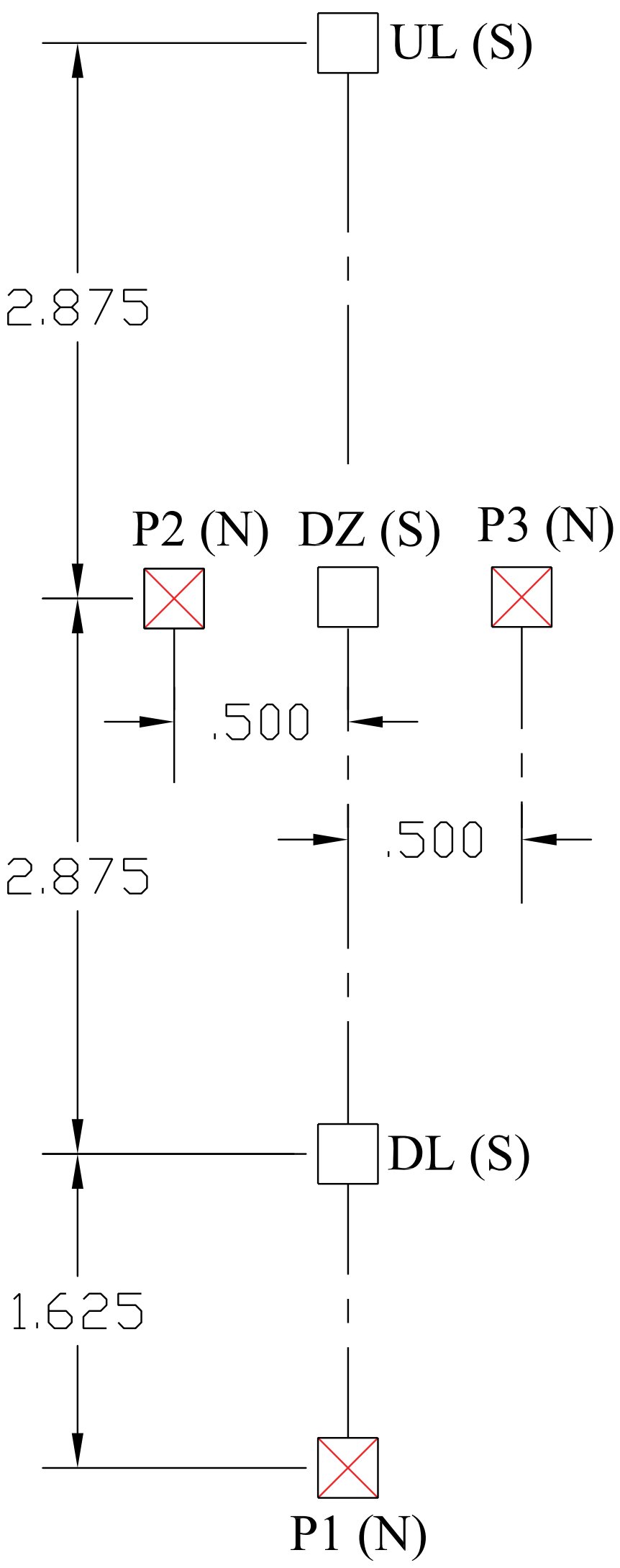

In the illustration above:
P1 = Positioning binary 1's lane
P2 = Positioning binary 2's lane
P3 = Positioning binary 4's lane

REVISIONS			
REV	ECO NO.	DATE	REVISED BY
000	N/A	03/04/15	1ST RELEASE

EMI-6 CAR OPERATING PANEL 4-STOP

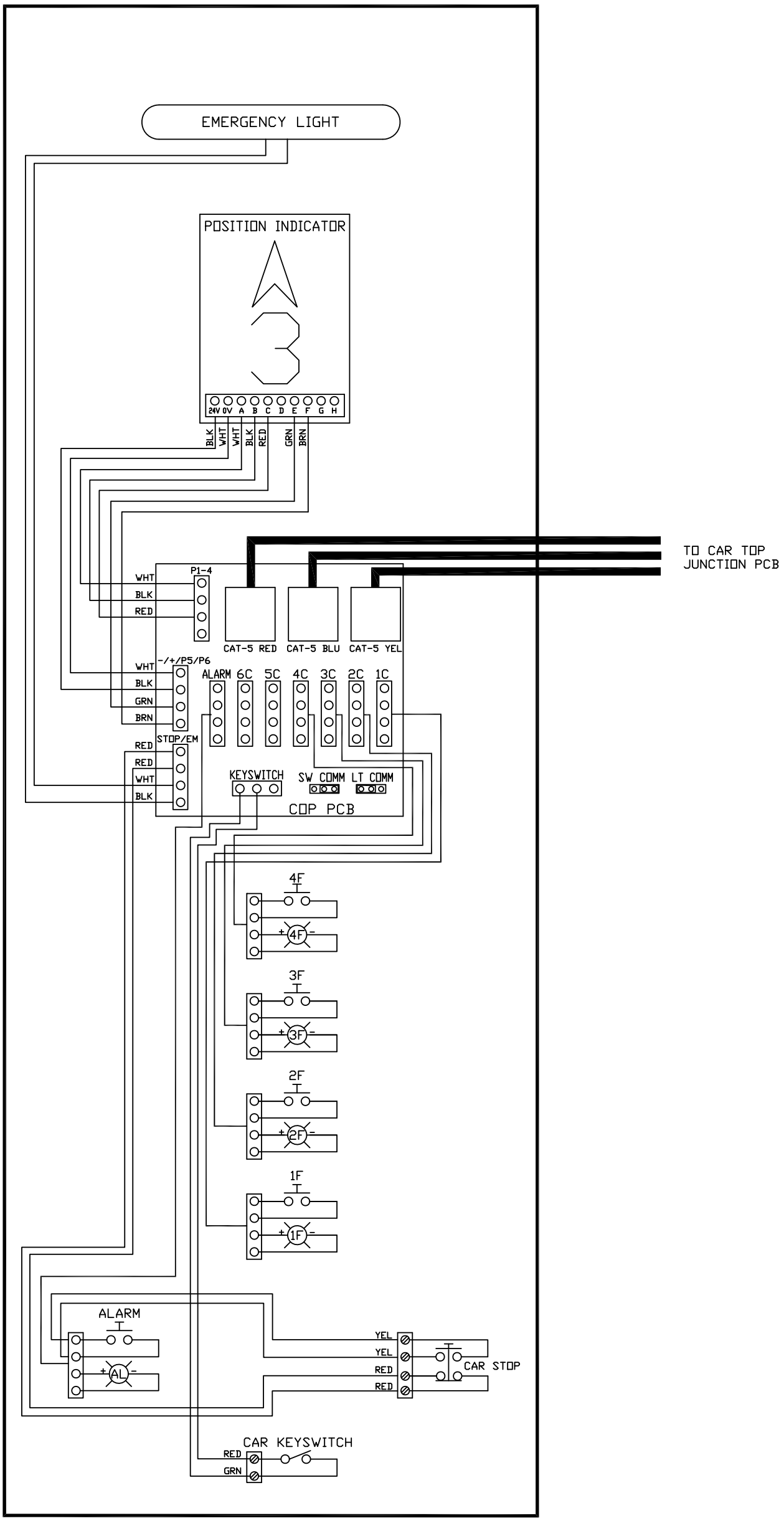

THE INFORMATION DISCLOSED HEREIN IS THE EXCLUSIVE PROPERTY OF savaria™ AND MAY NOT BE USED BY OTHERS WITHOUT PRIOR WRITTEN CONSENT

TITLE: EMI-6 CONTROLLER COP WIRING DIAGRAM

UNLESS OTHERWISE SPECIFIED ALL DIMENSIONS ARE IN INCHES. ALL DIMENSIONS IN [] ARE METRIC
TOLERANCES ON:
.X=±0.1 [.X=±3]
.XX=±0.03 [.XX=±0.8]
.XXX=±0.01 [.XXX=±0.25]
ANGLES X =±2.X =±0.5

MATERIAL: N/A

FINISH: N/A

DO NOT SCALE DRAWING

REMOVE ALL BURRS & SHARP CORNERS

DESIGNED BY:	DESIGN DATE:	SCALE:	REVISION:
		N/A	000
DRAWN BY: C. QUIRK	DRAWN DATE: 03/04/15	DRAFTSPERSON: N/A	
SHEET 1 OF 1	DRAWING NO: EMI-6 COP		SIZE B

WR500 LOCK CONNECTIONS

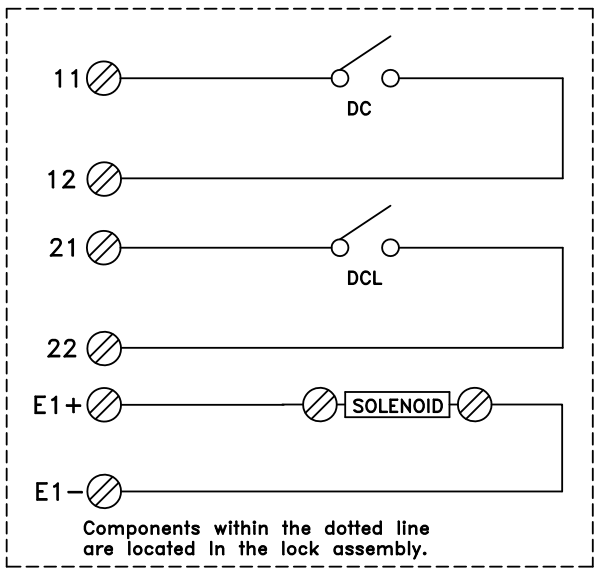

11– 12– DOOR CLOSED CONTACTS
21– 22– DOOR CLOSED/LOCKED CONTACTS
E1– LOCK SOLENOID +
E2– LOCK SOLENOID –

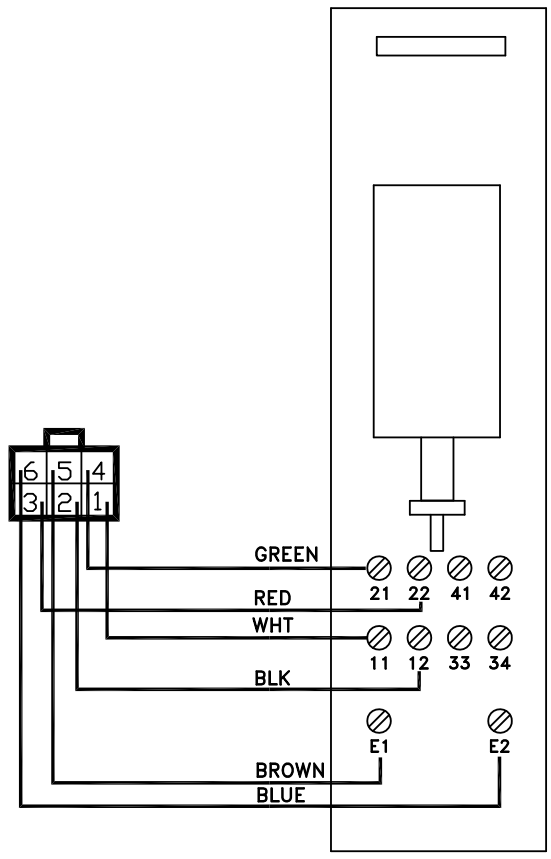

PRO–E.M.I. LOCK CONNECTIONS

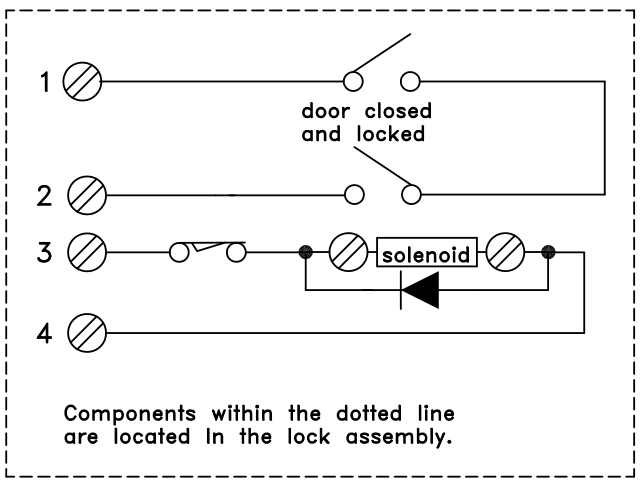

1– 2– DOOR CLOSED/LOCKED CONTACTS
3– LOCK SOLENOID +
4– LOCK SOLENOID –

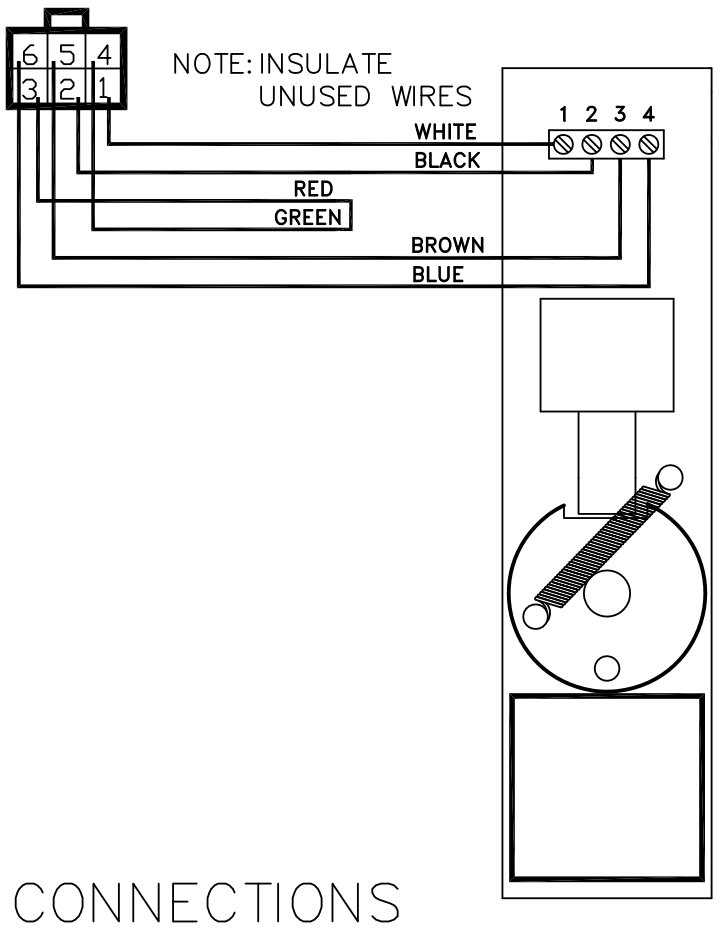

PORTA LOCK CONNECTIONS

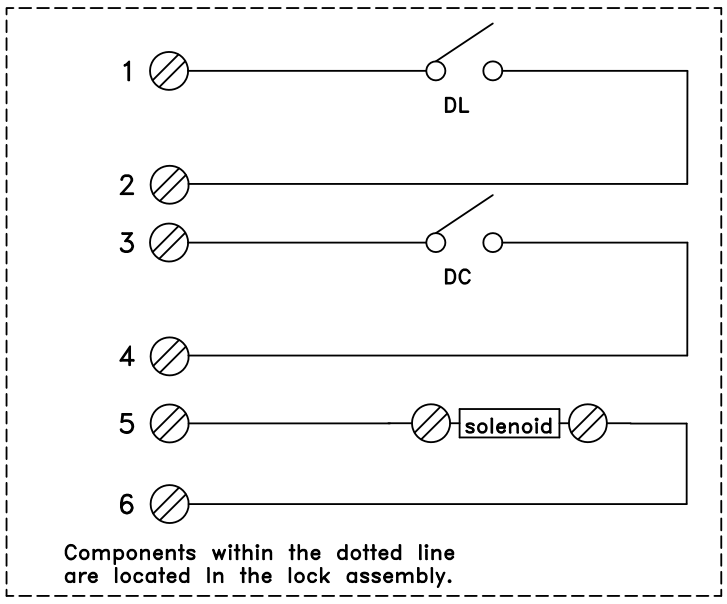

1– 2– DOOR LOCKED CONTACTS
3– 4– DOOR CLOSED CONTACTS
5– LOCK SOLENOID +
6– LOCK SOLENOID –

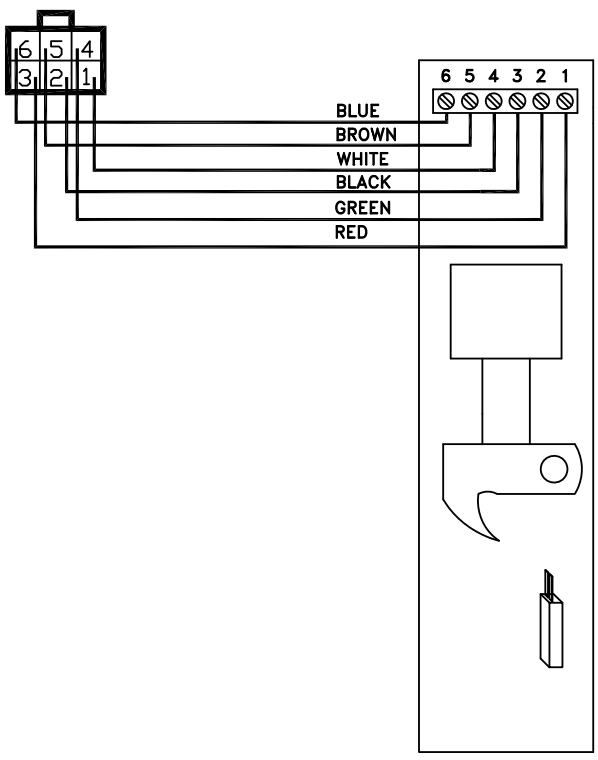

THE INFORMATION DISCLOSED HEREIN IS THE EXCLUSIVE PROPERTY OF savaria
AND MAY NOT BE USED BY OTHERS WITHOUT PRIOR WRITTEN CONSENT

UNLESS OTHERWISE SPECIFIED ALL DIMENSIONS ARE IN INCHES. ALL DIMENSIONS IN [ ] ARE METRIC
TOLERANCES ON:
.X=±0.1 [.X=±3]
.XX=±0.03 [.XX=±0.8]
.XXX=±0.01 [.XXX=±0.25]
ANGLES X =±2.X =±0.5

DO NOT SCALE DRAWING | REMOVE ALL BURRS & SHARP CORNERS

DESIGNED BY:	DESIGN DATE:	SCALE:	REVISION:
		N/A	006
DRAWN BY:	DRAWN DATE:	DRAFTSPERSON:	
JS	MAR. 10/08	N/A	
MATERIAL: N/A			SIZE B
FINISH: N/A	SHEET 1 OF 2	DRAWING NO: LOCK_HOOK	

TITLE: EMI–6 CONTROLLER LOCK HOOK–UP DIAGRAMS

HONEYWELL LOCK CONNECTIONS

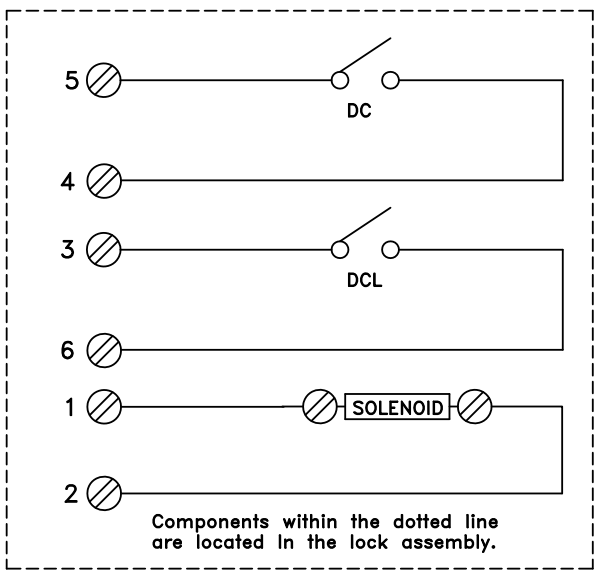

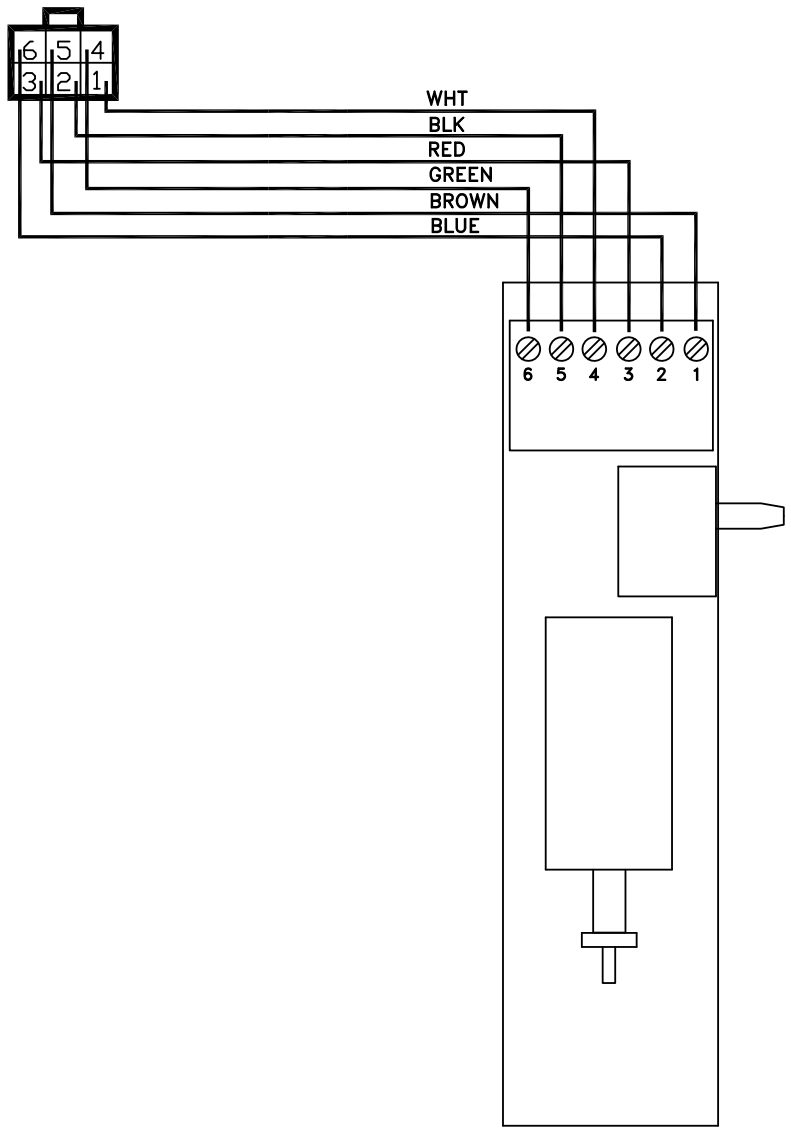

4– 5– DOOR CLOSED CONTACTS

3– 6– DOOR LOCKED CONTACTS

1– LOCK SOLENOID +

2– LOCK SOLENOID –

THE INFORMATION DISCLOSED HEREIN IS THE EXCLUSIVE PROPERTY OF savaria. AND MAY NOT BE USED BY OTHERS WITHOUT PRIOR WRITTEN CONSENT	UNLESS OTHERWISE SPECIFIED ALL DIMENSIONS ARE IN INCHES. ALL DIMENSIONS IN [] ARE METRIC TOLERANCES ON: .X=±0.1 [.X=±3] .XX=±0.03 [.XX=±0.8] .XXX=±0.01 [.XXX=±0.25] ANGLES X =±2.X =±0.5	DO NOT SCALE DRAWING	REMOVE ALL BURRS & SHARP CORNERS
TITLE: INFINITY CONTROLLER LOCK HOOK–UP DIAGRAMS	MATERIAL: N/A	DESIGNED BY:	DESIGN DATE:
		DRAWN BY: JS	DRAWN DATE: MAR. 10/08
	FINISH: N/A	SHEET 2 OF 2	DRAWING NO: LOCK_HOOK

SCALE:	REVISION:
N/A	006
DRAFTSPERSON: N/A	SIZE B

POWER PCB

BL

REF

L1 L2 L2

P5/F2
N2

N2 110 SW2 SW1 L N +V -V

Plug to:
UPS Recept.

N OUT1 H
UPS 1350VA
N IN H

P2/E3
110N

F8
15A

Recpt. to:
UPS Plug

DISCONNECT INTERLOCKED
AUX. SWITCH

P3/D8 P7/B8
P4/B1 P8/B2
P6/B2 P8/B8

REF

P3/D1 P6/B1
P6/B7 P8/C2
24DC2

P4/C2
24DC3

P4/B2
P5/C3
24DC4

F2
2A

F3
3A

F4
2A

F1
4A

110V
P2/B3
P6/C2

110N
P2/C3
P5/A1
P6/C2

+24V FROM DLM

REF FROM DLM

RESET

PS1 (control)
24VDC 60W

PS2 (brake)
24VDC 120W

+V2 P2/E1

-V2 P2/E2

OL

CC

PT1 PT2 CC

RUN SE

13 14
M1
AUX2

A

NORMAL POWER NP

B

L1 L2 N

NP
L4 T1
L2 T2
L3 T3
L1 T4

L2

L1

P2/G4

240VAC—1—60 POWER
AND 30 AMP MAX. DUAL
ELEMENT TIME DELAY FUSES
SUPPLIED BY THE ELECTRICAL
CONTRACTOR PER NEC CODE.

F6
1A

H1 X1
H N 110 230
H2 X2

F7
2.5A

Plug to:
UPS Recept.

OUT2
UPS 1350VA

250VA
Emergency
Power

REV DATE: 09-05-23

PAGE 1 of 9	MODEL TYPE: GEARED
JOB#:	DIST:
DWG #: TAL8.5 (ZENITH)	JOB NAME:
DWG DATE:	ENGR:

SAVARIA ZENITH (TRACTION)

A
B
C
D
E
F
G
H
1
2
3
4
5
6
7
8
+V2
P1/E6
J33.9
BR+
BRN
MOTOR
BRAKE
ORG
BR+
BR-
11
14
M14
BRK
13
14
M1
AUX1
M13
-V2
P1/E6
DNX
UPX
120V coil
M1
P1/D6
110V
RP
RP
P1/D6
110N
110N
N
P1/E2
LIFT
MOTOR
T1
T2
T3
M1
M1
M1
P1/D7
PT1
PT2
P1/G5
L1
P1/G5
L2
P1/G3
SC S1 S2 STF SD RL RM1 RH STR
RUN
SE
MITSUBISHI
VF DRIVE
5.0 Hp=FR-D720-238-N15
RELAY O/P C A
U V W
P/+
PR
BRAKE RESISTOR
5.0 Hp = 25R 185W
FR-ABR-5.5k
VC
2
UP
DE1
DE2
HSC
DN
P6/F7
UP(a)
UP(b)
DN(a)
DN(b)
HS(a)
HS(b)
P3/D8
11
10
9
8
7
6
DS6
DS7
PV8
PV9
+V2
P1/E6
-V2
P1/E6
A1
A2
BRK
24VDC coil
REV DATE: 03-28-24
PAGE 2 of 9
DWG #: TAL8.5 (ZENITH)
SAVARIA ZENITH (TRACTION)

REV DATE: 09-05-23

PAGE 3 of 9 | DWG #: TAL8.5 (ZENITH)

SAVARIA ZENITH (TRACTION)

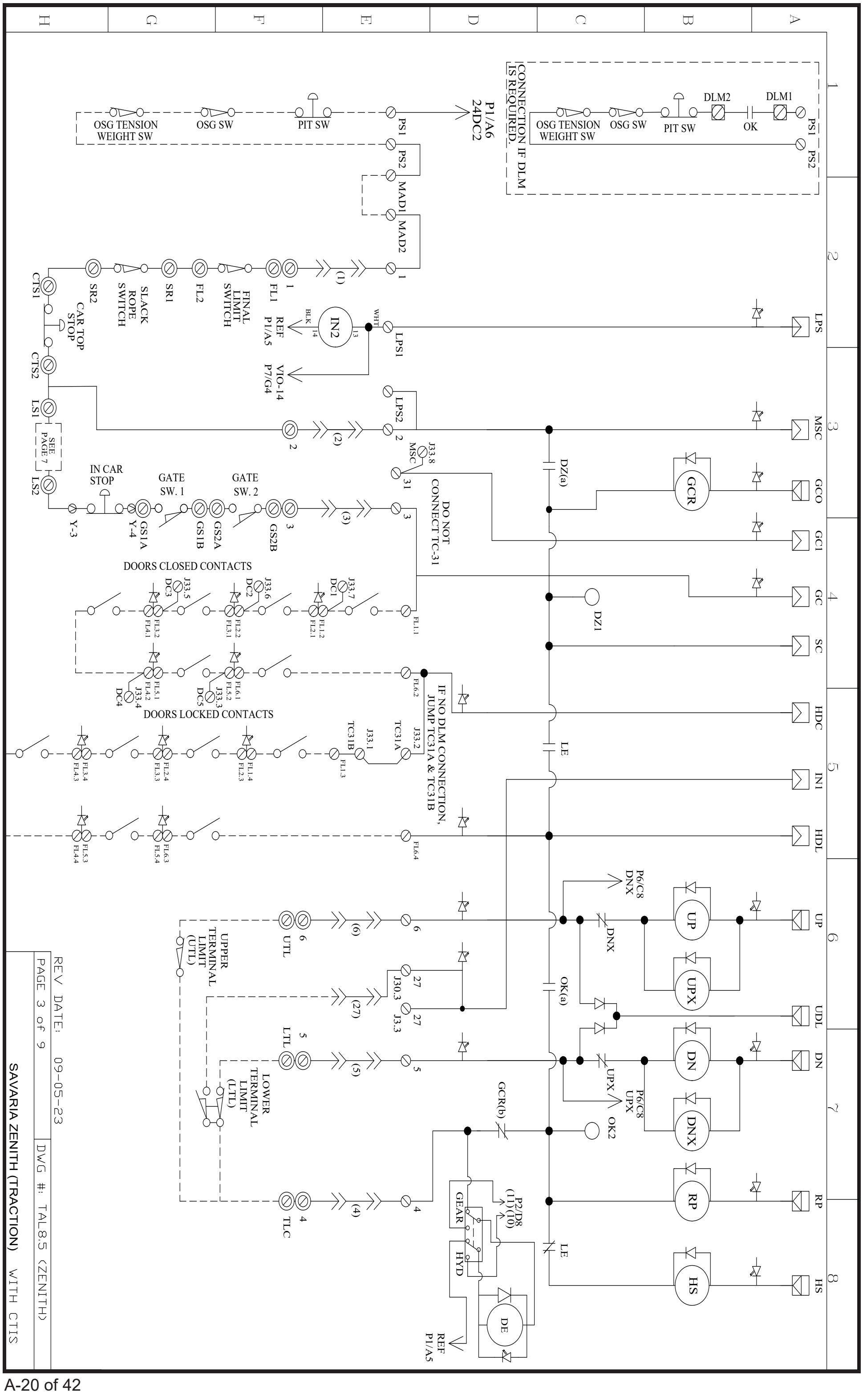

REV DATE: 09-05-23

PAGE 3 of 9 | DWG #: TAL8.5 (ZENITH)

SAVARIA ZENITH (TRACTION) WITH CTIS

REF
P1/A5
P1/A7
24DC3
24DC4
P1/A7
BK(a)
BK
DZ (b)
BDZ
1EL(b)
B1
2EL(b)
B2
3EL(b)
B3
4EL(b)
B4
5EL(b)
B5
6EL(b)
B6
BK
BKR
OK
OK
OK(b)
AL
AL
LE
LE
BK(b)
OK1
1EL
DC1
2EL
DC2
3EL
DC3
4EL
DC4
5EL
DC5
6EL
DC6
FL1.6
FL1.5
ELEC. LOCK 1ST
CH1
FL2.6
FL2.5
ELEC. LOCK 2ND
CH2
FL3.6
FL3.5
ELEC. LOCK 3RD
CH3
FL4.6
FL4.5
ELEC. LOCK 4TH
CH4
FL5.6
FL5.5
ELEC. LOCK 5TH
CH5
FL6.6
FL6.5
ELEC. LOCK 6TH
CH6
EMI LOCKS AND CAR HERE LIGHTS
REV DATE: 09-05-23
PAGE 4 of 9
DWG #: TAL8.5 (ZENITH)
SAVARIA ZENITH (TRACTION)

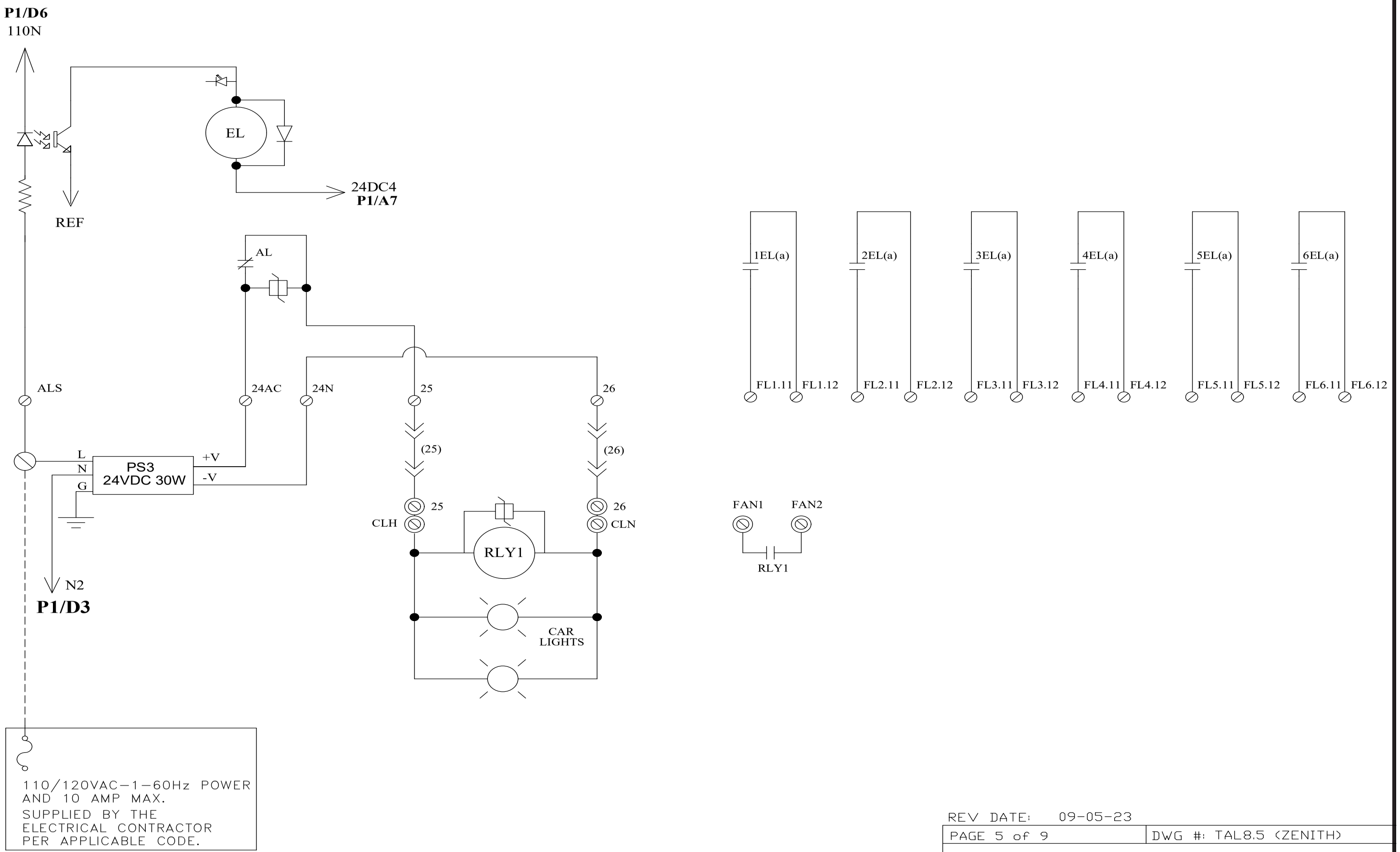

REV DATE: 09-05-23

PAGE 5 of 9	DWG #: TAL8.5 (ZENITH)

SAVARIA ZENITH (TRACTION)

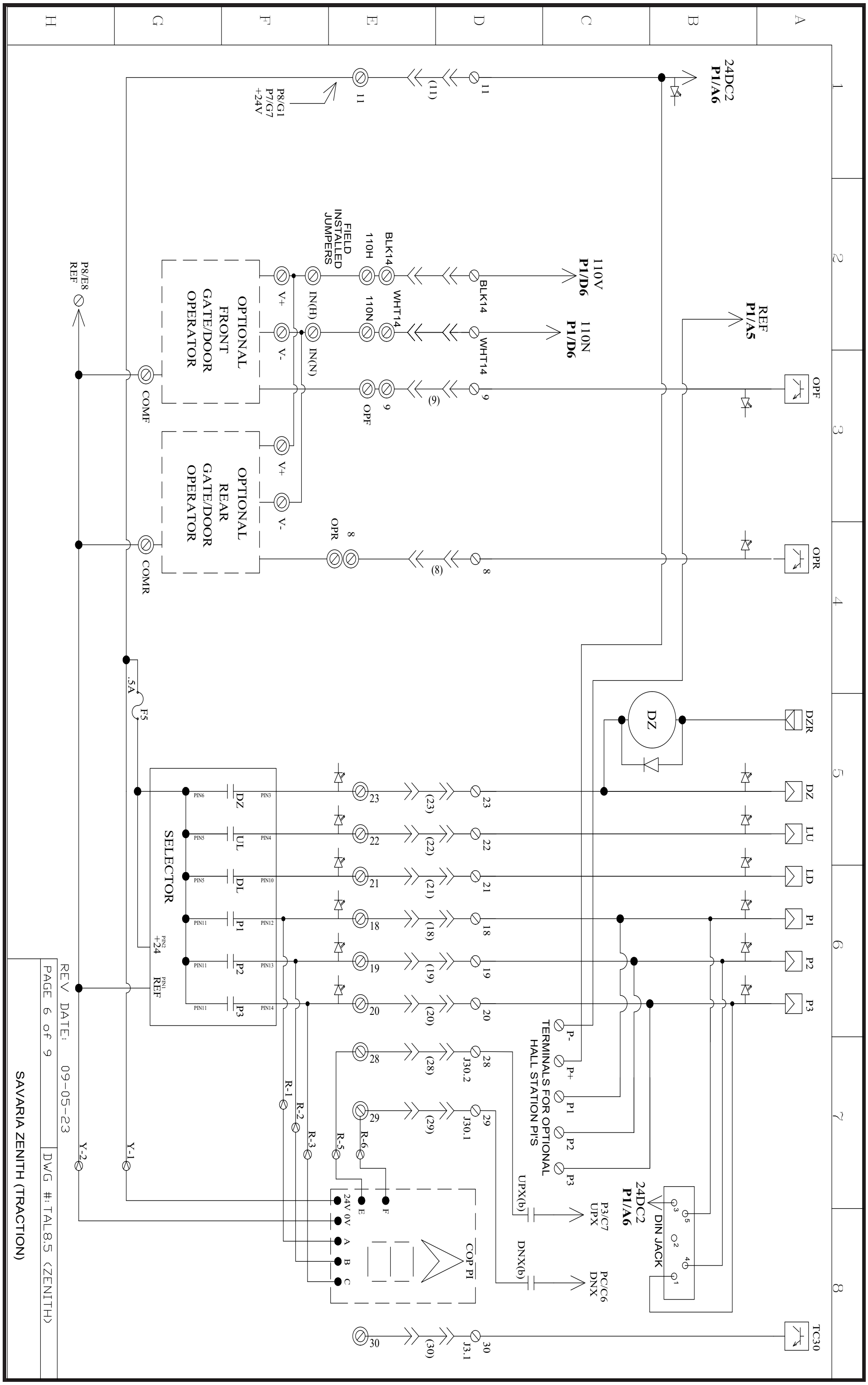
24DC2 P1/A6
REF P1/A5
OPF
OPR
110V P1/D6
110N P1/D6
P8/G1 P7/G7 +24V
P8/E8 REF
FIELD INSTALLED JUMPERS
110H
110N
BLK14
WHT14
V+
V-
IN(H)
IN(N)
OPTIONAL FRONT GATE/DOOR OPERATOR
OPTIONAL REAR GATE/DOOR OPERATOR
COMF
COMR
.5A
F5
DZR
DZ
LU
LD
P1
P2
P3
SELECTOR
PIN6
PIN5
PIN10
PIN11
PIN12
PIN13
PIN14
UL
DL
P- P+ P1 P2 P3
TERMINALS FOR OPTIONAL HALL STATION PI'S
UPX(b)
DNX(b)
P3/C7 UPX
PC/C6 DNX
24DC2 P1/A6
DIN JACK
TC30
J30.2
J30.1
J3.1
COP PI
24V 0V A B C
E F
R-1 R-2 R-3 R-5 R-6
Y-1 Y-2
REV DATE: 09-05-23
PAGE 6 of 9
DWG #: TAL8.5 (ZENITH)
SAVARIA ZENITH (TRACTION)

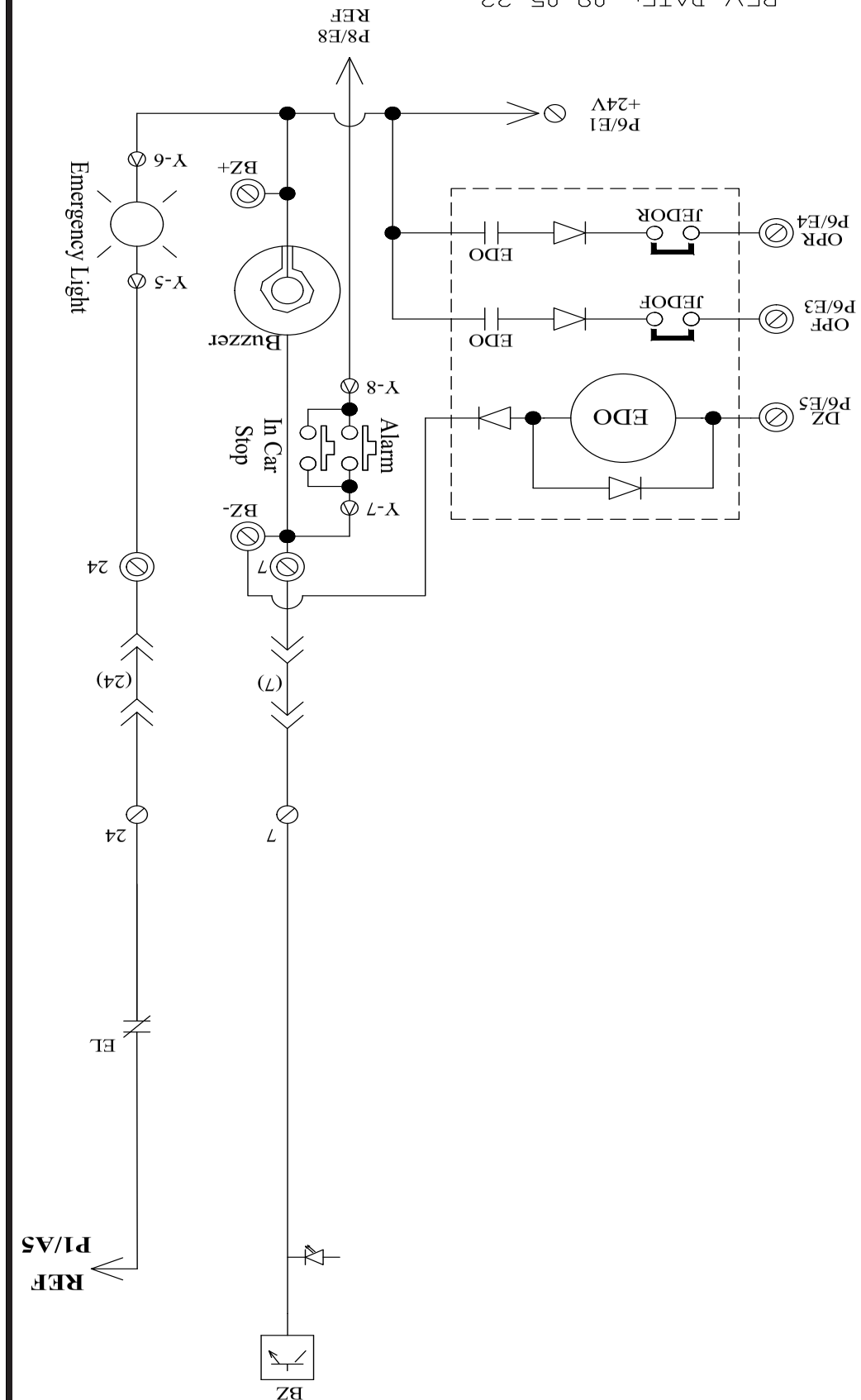

REV DATE: 09-05-23

PAGE 7 of 9	DWG #:TAL8,5 (ZENITH)

SAVARIA ZENITH (TRACTION)

CAR TOP INSPECTION STATION

NORM
INSP
INSP ENABLE
INSP UP
INSP DOWN
IN1
6
10
2
5
9
1
NORM
INSP
13
14
IN1
Inspection Switch
INSP RUN/STOP
COURTESY RECEPTACLE
COURTESY LIGHT
LIGHT SWITCH

CAR TOP BOX

GRN — REF
BLU — TO TC13 SPLICE
YEL — TC13 (T4.5)
ORG — TO TC12 SPLICE
VIO — TC12 (T4.6)
GRY — SPLICE
PNK — SPLICE
BRN — TO TCA-1 (LPS-1) SPLICE
RED — +24V
WHT — LS1
BLK — LS2
SPLICE
WHT — TO TCA-WHT14 SPLICE
BLK — TO TCA-BLK14 SPLICE
GRN — TO TCA-GRN14 SPLICE

CAR TOP PROP

YEL
BLK
13
14
23
24
CAR TOP PROP ACTIVATE SWITCH
BLU
WHT
CAR TOP PROP STOWED SWITCH
WHT
BLK

BZ
REF
P1/A5
EL
PH1
PH2
TCRED
TCWHT
(RED)
(WHT)
TCRED
TCWHT
7
24
(7)
(24)
7
24
Y-7
BZ-
Alarm
In Car Stop
Y-8
Buzzer
Y-5
Emergency Light
Y-6
BZ+
DZ P6/E5
EDO
OPF P6/E3
JEDOF
EDO
OPR P6/E4
JEDOR
EDO
P6/E1 +24V
P8/E8 REF

REV DATE: 09-05-23

PAGE 7 of 9 | DWG #: TAL8.5 (ZENITH)

SAVARIA ZENITH (TRACTION) WITH CTIS

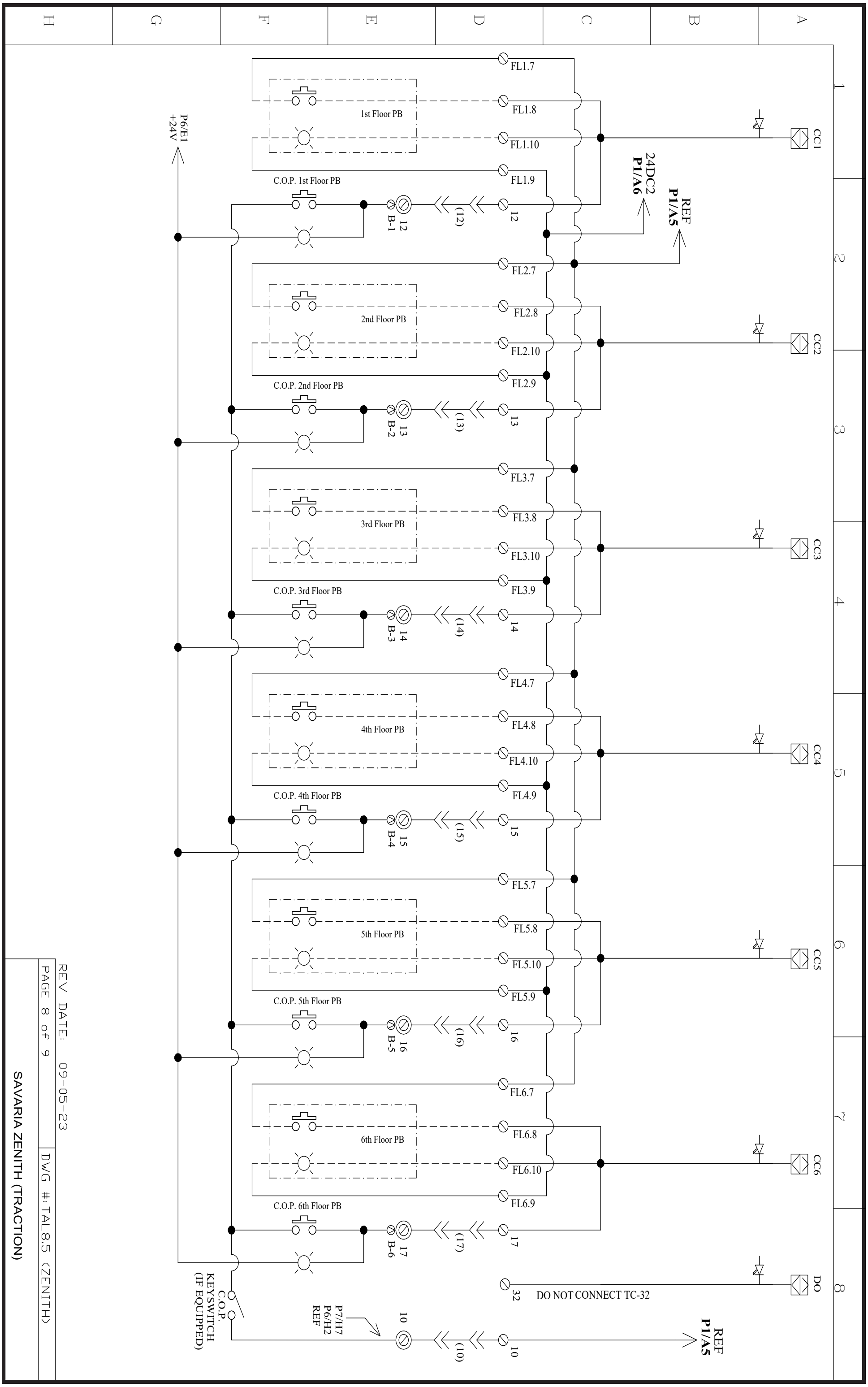

REV DATE: 09-05-23

PAGE 8 of 9 | DWG #: TAL8.5 (ZENITH)

SAVARIA ZENITH (TRACTION)

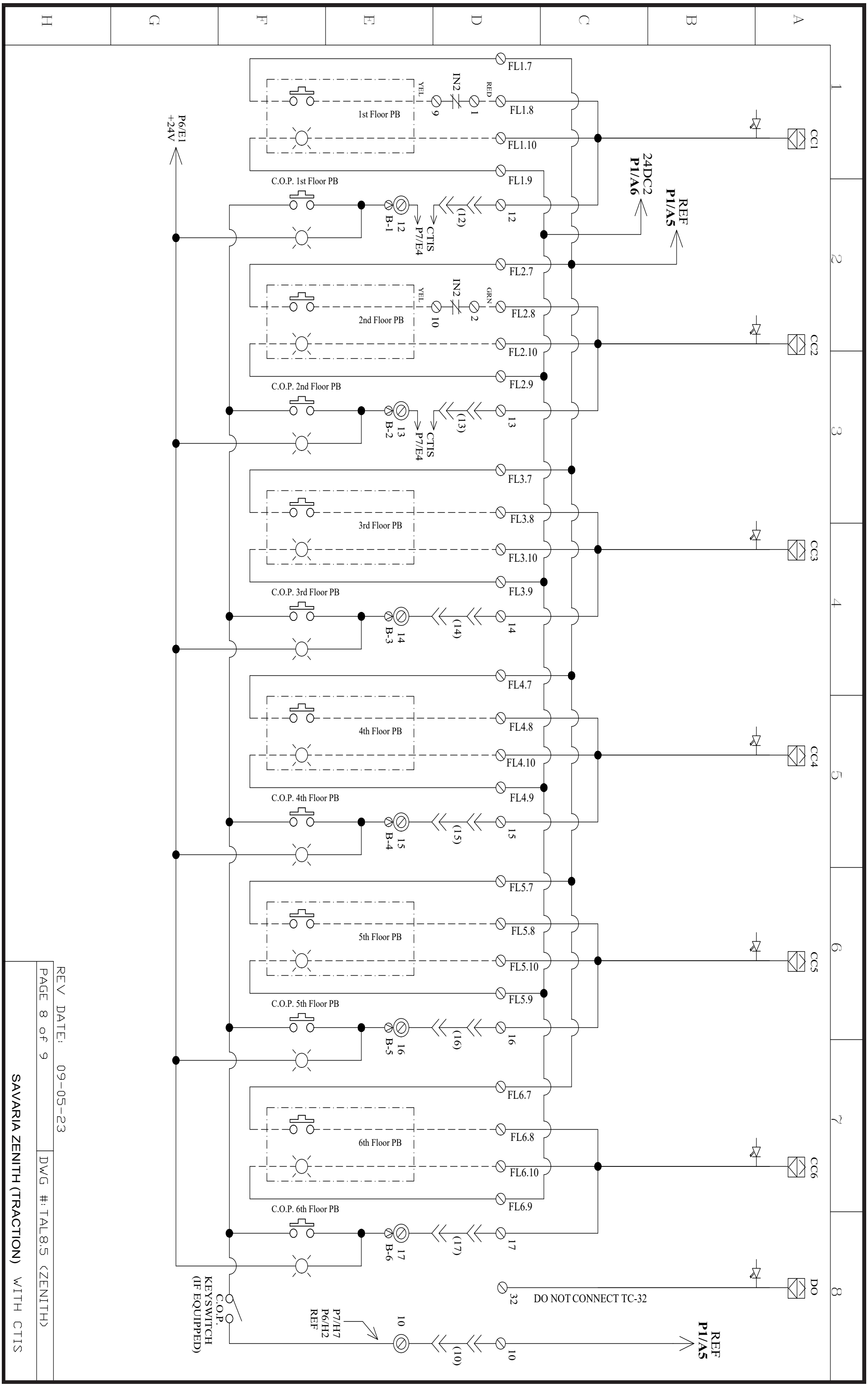

REV DATE: 09-05-23

PAGE 8 of 9

DWG #: TAL8.5 <ZENITH>

SAVARIA ZENITH (TRACTION) WITH CTIS

1 2 3 4 5 6 7 8

A B C D E F G H

CONTROLLER TERMINAL STRIP CONNECTION

CAR TOP BOX TERMINAL

CAT-5 TERMINAL

PCB TERMINAL (INTERNAL)

PCB TERMINAL (FIELD)

COMPUTER BIDERECTIONAL TERMINAL

COMPUTER INPUT

COMPUTER OUTPUT

COMPUTER TRANSISTOR OUTPUT

HOISTWAY CONNECTED WIRE

FACTORY CONNECTED WIRE

BRIDGE RECTIFIER

VARISTOR

TRAVEL CABLE WIRE

RELAY COIL
VALVE COIL

LIMIT SWITCH N.C.

LIMIT SWITCH N.O.

P1 P2 TEMPERATURE SENSOR

LIGHT

PUSH BUTTON

DIODE

TOGGLE SW
DPDT

CONTACT N.O.

CONTACT N.C.

HAND OPERATED SWITCH N.C.

HAND OPERATED SWITCH N.O.

FUSE

Test point on PCB

PRESSURE SWITCH N.O.

CIRCUIT BREAKER

REV DATE: 09-05-23

PAGE 9 of 9 | DWG #:TAL8.5 (ZENITH)

SAVARIA ZENITH (TRACTION)

UNINTENDED MOVEMENT (U.M.) MONITORING SYSTEM CONNECTIONS

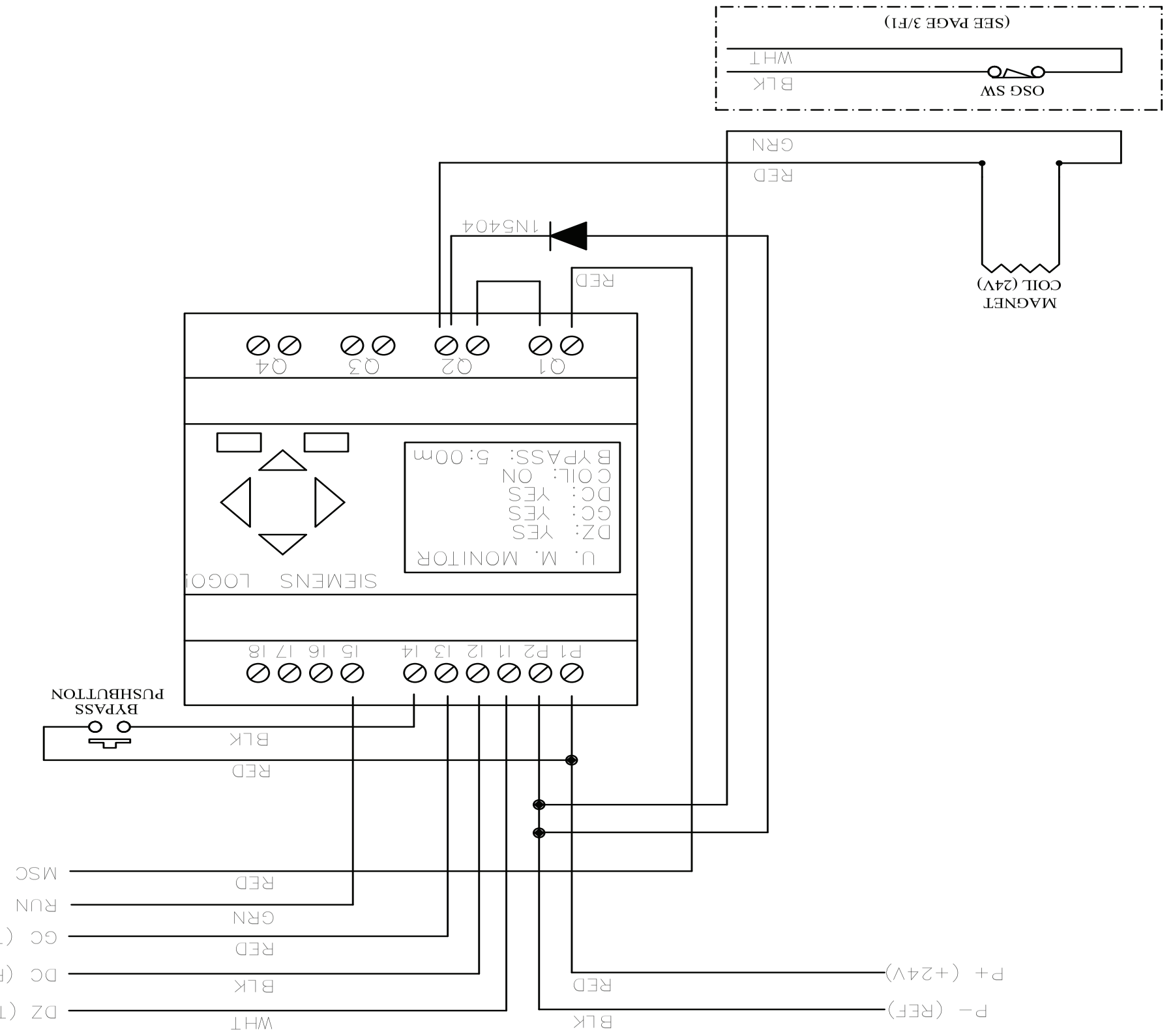

NOTE: PRESSING THE BYPASS BUTTON WILL PREVENT THE UNINTENDED MOVEMENT MONITORING FROM FUNCTIONING FOR A PERIOD OF 5 MINUTES. THIS IS TO ALLOW FOR MAINTENANCE FUNCTIONS TO BE PERFORMED WITHOUT THE MAGNET ON THE OSG DROPPING OUT. THE TIME REMAINING WILL BE SHOWN ON THE SMALL PLC DISPLAY.

SAVARIA ZENITH (TRACTION)	
PAGE: 10 (SUPPLEMENT)	DWG #: TAL8.5 (ZENITH)

REV DATE: 01-24-22

UNINTENDED MOVEMENT (U.M.) MONITORING SYSTEM CONNECTIONS

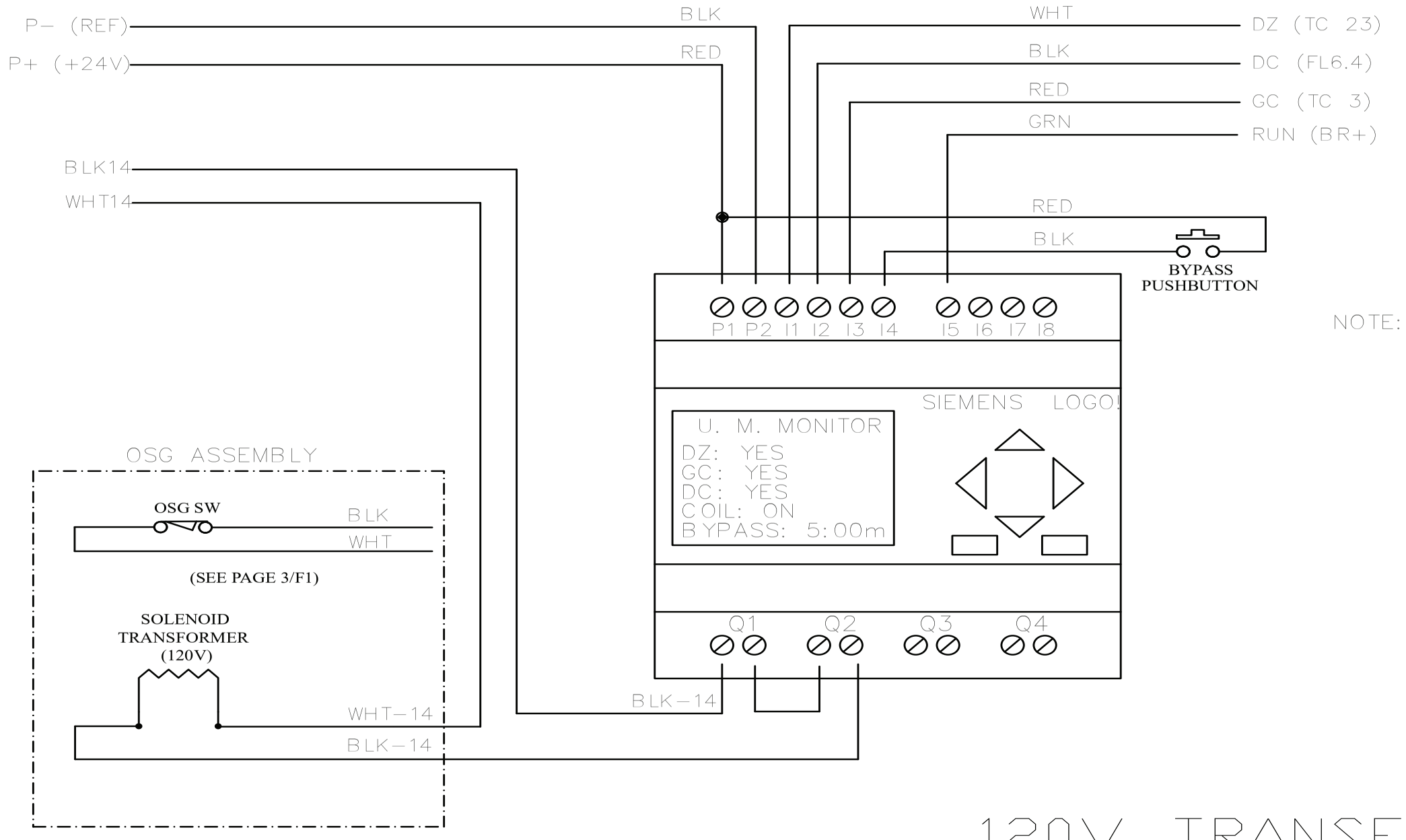

NOTE: PRESSING THE BYPASS BUTTON WILL PREVENT THE UNINTENDED MOVEMENT MONITORING FROM FUNCTIONING FOR A PERIOD OF 5 MINUTES. THIS IS TO ALLOW FOR MAINTENANCE FUNCTIONS TO BE PERFORMED WITHOUT THE MAGNET ON THE OSG DROPPING OUT. THE TIME REMAINING WILL BE SHOWN ON THE SMALL PLC DISPLAY.

120V TRANSFORMER VERSION

REV DATE: 02-07-23

PAGE: 10 (SUPPLEMENT)	DWG #: TAL8.5 (ZENITH)
SAVARIA ZENITH (TRACTION)	

REVISIONS			
REV	ECO NO.	DATE	APPROVED
000	C4	02/03/22	1ST RELEASE
001	2040	10/01/22	C. QUIRK

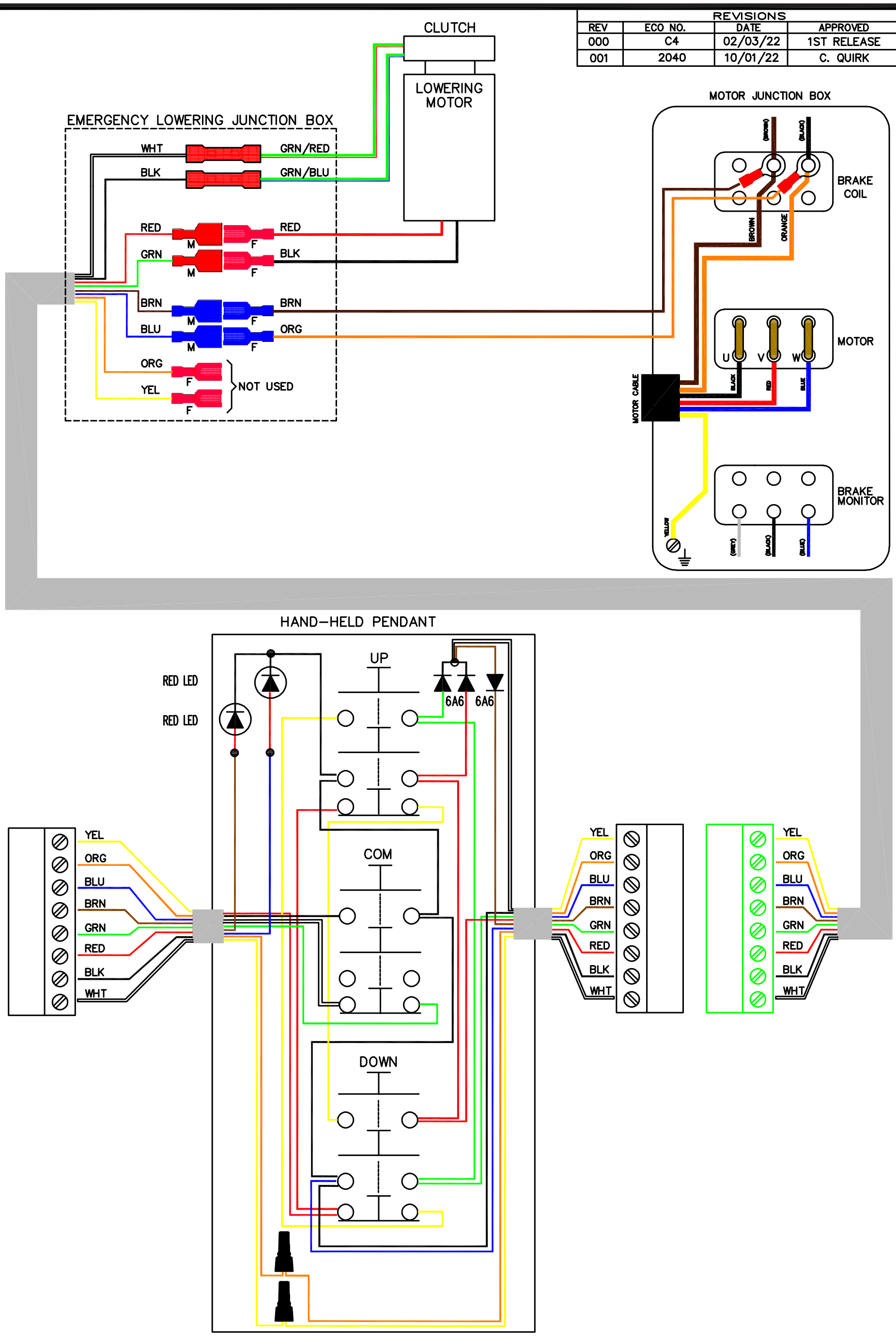

THE INFORMATION DISCLOSED HEREIN IS THE EXCLUSIVE PROPERTY OF savaria™ AND MAY NOT BE USED BY OTHERS WITHOUT PRIOR WRITTEN CONSENT	UNLESS OTHERWISE SPECIFIED ALL DIMENSIONS ARE IN INCHES. ALL DIMENSIONS IN [ ] ARE METRIC TOLERANCES ON: .X=±0.1 [.X=±3] .XX=±0.03 [.XX=±0.8] .XXX=±0.01 [.XXX=±0.25] ANGLES X =±2 X =±0.5	DO NOT SCALE DRAWING	REMOVE ALL BURRS & SHARP CORNERS	
		DESIGNED BY:	DESIGN DATE:	SCALE: N/A / REVISION: 001
TITLE: ZENITH CONTROLLER EMERGENCY LOWERING APPARATUS DIAGRAM	MATERIAL: N/A	DRAWN BY: C. QUIRK	DRAWN DATE: 02/03/22	DRAFTSPERSON: N/A
	FINISH: N/A	SHEET 1 OF 1	DRAWING NO: 470190-ZEN	SIZE B

REVISIONS			
REV	ECO NO.	DATE	REVISED BY
000	C4	02/24/22	1ST RELEASE
001	2040	10/01/22	C. QUIRK

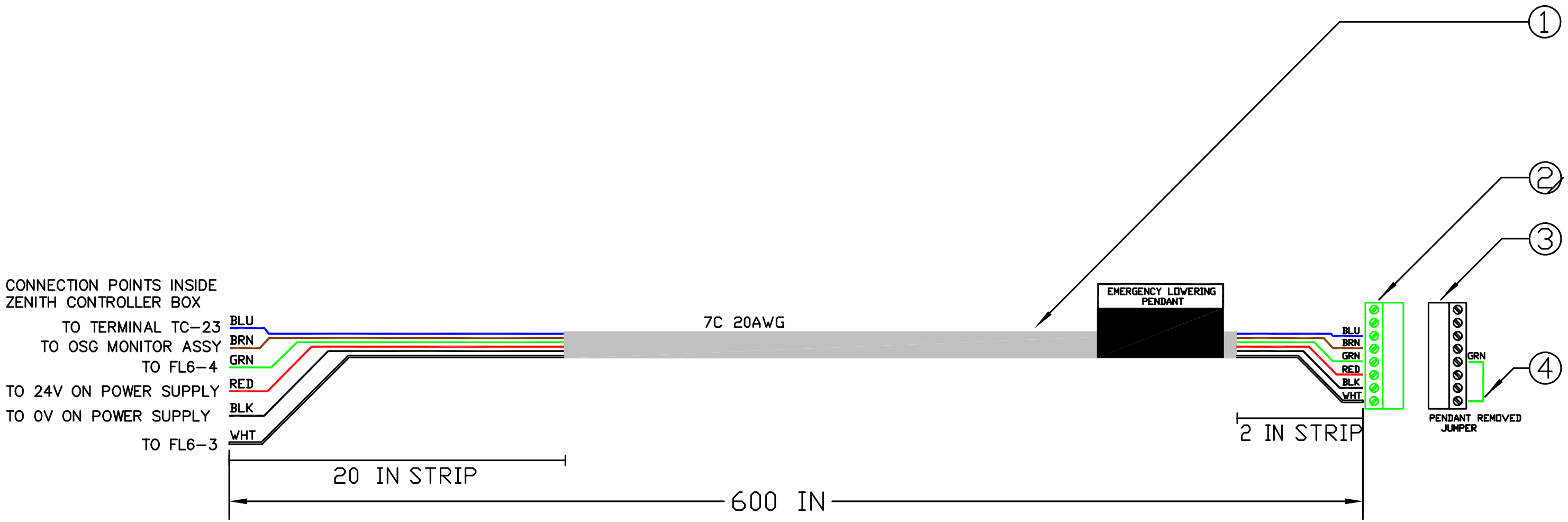

NOTE: ① WIRE IS 20 AWG, 7C, 600", UNSHIELDED, FT-4, CSA APPROVED
② 8-POSITION INLINE SOCKET (P/N-JITE PTB750B-16-2-08-3)
③ 8-POSITION PLUG (P/N-JITE PTB750B-03-2-08-1)
④ WIRE IS 20AWG, GRN, 3", TYPE-B HOOK-UP, CSA APPROVED
CONNECTORS ② AND ③ ARE VIEWED FROM ABOVE
APPLY IDENTIFICATION LABEL TO CONNECTOR END
TRIM ORANGE WIRE BACK TO JACKET AT BOTH ENDS

THE INFORMATION DISCLOSED HEREIN IS THE EXCLUSIVE PROPERTY OF savaria™ AND MAY NOT BE USED BY OTHERS WITHOUT PRIOR WRITTEN CONSENT

UNLESS OTHERWISE SPECIFIED ALL DIMENSIONS ARE IN INCHES. ALL DIMENSIONS IN [] ARE METRIC
TOLERANCES ON:
.X=±0.1 [.X=±3]
.XX=±0.03 [.XX=±0.8]
.XXX=±0.01 [.XXX=±0.25]
ANGLES X =±2.X =±0.5

DO NOT SCALE DRAWING

REMOVE ALL BURRS & SHARP CORNERS

TITLE: ZENITH CONTROLLER EMERG LOWERING PENDANT PIGTAIL HARNESS

DESIGNED BY:	DESIGN DATE:	SCALE:	REVISION:
		N/A	001
DRAWN BY:	DRAWN DATE:	DRAFTSPERSON:	
C. QUIRK	02/24/22	N/A	

MATERIAL: N/A

FINISH: N/A

SHEET 1 OF 1

DRAWING NO: 252825-ZEN

SIZE B

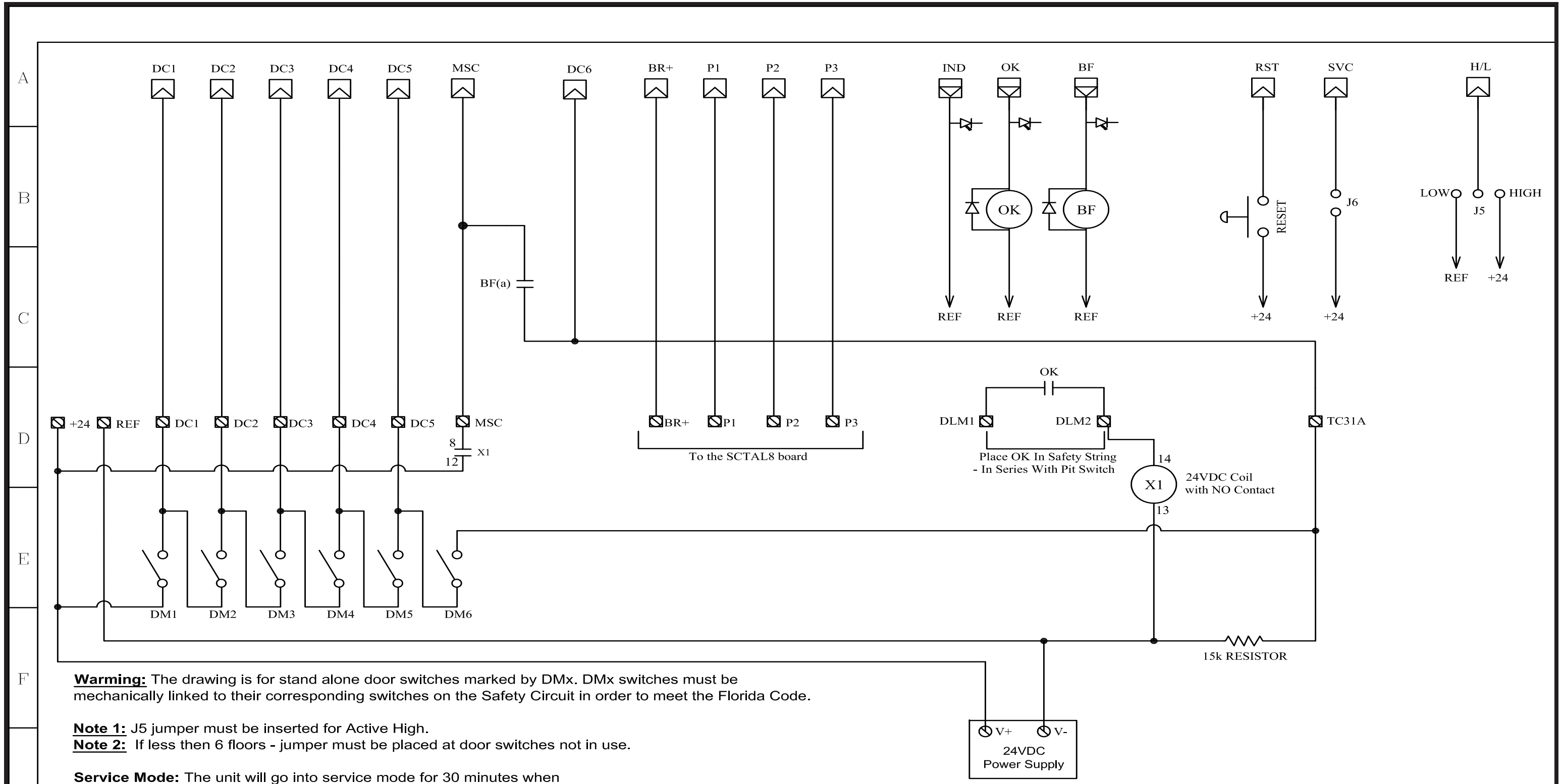

Warming: The drawing is for stand alone door switches marked by DMx. DMx switches must be mechanically linked to their corresponding switches on the Safety Circuit in order to meet the Florida Code.

Note 1: J5 jumper must be inserted for Active High.
Note 2: If less then 6 floors - jumper must be placed at door switches not in use.

Service Mode: The unit will go into service mode for 30 minutes when
While on Service Mode, OK relay will be continuously ON

Fault Reset: The Reset push button must remain active for 5 seconds.

LEDs Status

STATUS	OK LED	IND LED
NORMAL	ON	ON
SERVICE	ON	0.5s ON / 0.5s OFF
MONITORING FAULT	OFF	0.5s ON / 2s OFF
INTERNAL FAULT	OFF	1s ON / 1s OFF

Rev:09-10-20

PAGE 1 OF 1	DWG #:DLM-24/0VDC
DOOR LOCK MONITORING (DLM) PCB	

REVISIONS			
REV	ECO NO.	DATE	REVISED BY
000	C4	08/22/23	1ST RELEASE
001	C4	09/06/24	H. SINGH

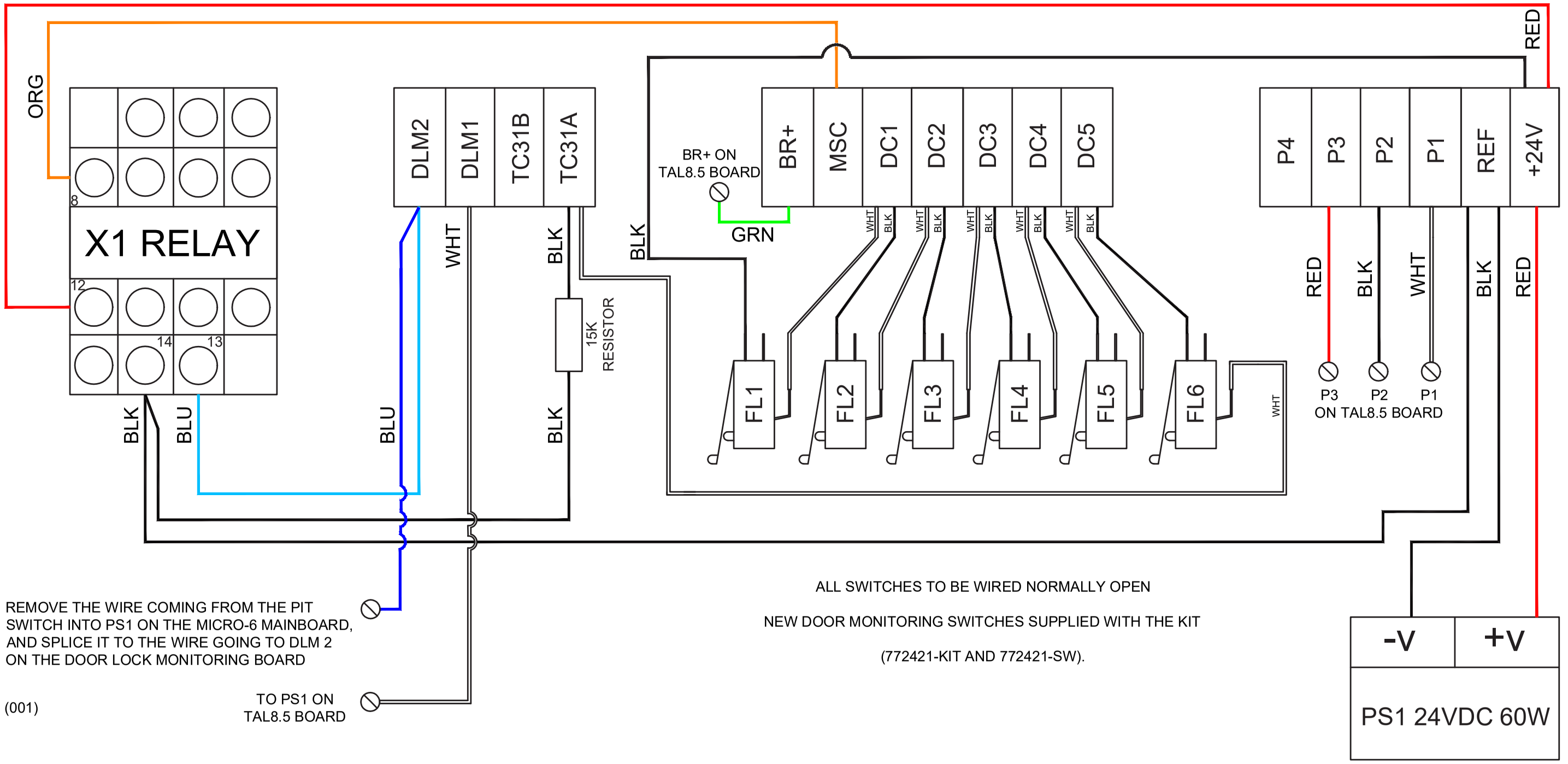

THE INFORMATION DISCLOSED HEREIN IS THE EXCLUSIVE PROPERTY OF savaria™ AND MAY NOT BE USED BY OTHERS WITHOUT PRIOR WRITTEN CONSENT

TITLE: EMI–6 DLM KIT WIRING DIAGRAM SIMPLIFIED

UNLESS OTHERWISE SPECIFIED ALL DIMENSIONS ARE IN INCHES. ALL DIMENSIONS IN [ ] ARE METRIC
TOLERANCES ON:
.X=±0.1 [.X=±3]
.XX=±0.03 [.XX=±0.8]
.XXX=±0.01 [.XXX=±0.25]
ANGLES X =±2X =±0.5

MATERIAL: N/A

FINISH: N/A

DO NOT SCALE DRAWING

REMOVE ALL BURRS & SHARP CORNERS

DESIGNED BY:	DESIGN DATE:	SCALE:	REVISION:
		N/A	001
DRAWN BY:	DRAWN DATE:	DRAFTSPERSON:	
HARSUMEET.S	08/22/23	N/A	
SHEET 1 OF 1	DRAWING NO: EMI–6 DLM WIRING		SIZE B

REVISIONS			
REV	ECO NO.	DATE	APPROVED
000	2040	10/06/22	1ST RELEASE

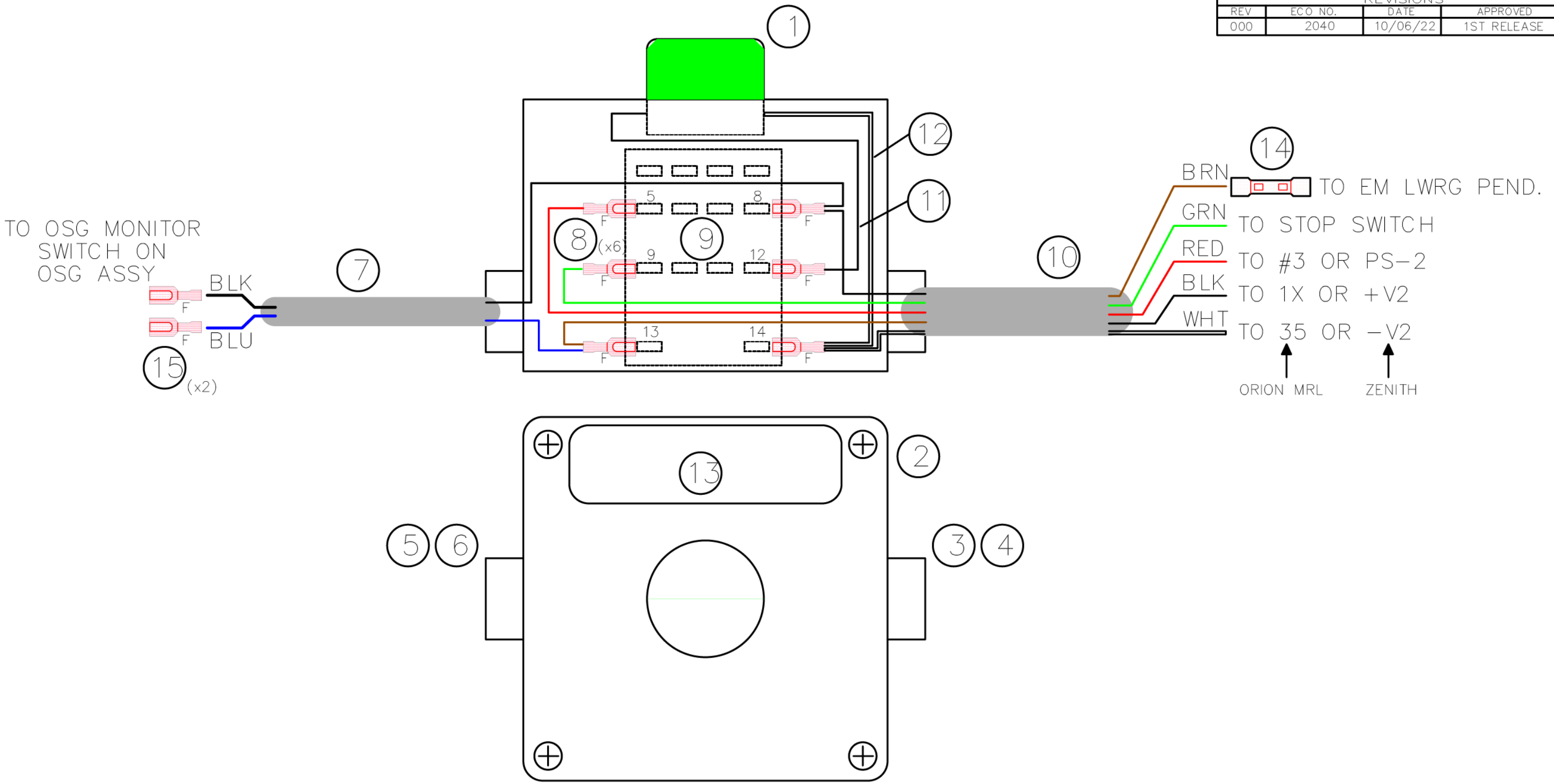

THE INFORMATION DISCLOSED HEREIN IS THE EXCLUSIVE PROPERTY OF savaria AND MAY NOT BE USED BY OTHERS WITHOUT PRIOR WRITTEN CONSENT

UNLESS OTHERWISE SPECIFIED ALL DIMENSIONS ARE IN INCHES. ALL DIMENSIONS IN [] ARE METRIC TOLERANCES ON: .X=±0.1 [.X=±3] .XX=±0.03 [.XX=±0.8] .XXX=±0.01 [.XXX=±0.25] ANGLES X =±2X =±0.5	DO NOT SCALE DRAWING	REMOVE ALL BURRS & SHARP CORNERS		
	DESIGNED BY:	DESIGN DATE:	SCALE: N/A	REVISION: 000
MATERIAL: N/A	DRAWN BY: C. QUIRK	DRAWN DATE: 10/06/22	DRAFTSPERSON: N/A	
FINISH: N/A	SHEET 1 OF 1	DRAWING NO: 252828		SIZE B

TITLE: ORION/ZENITH CONTROLLERS OSG MONITOR ASSEMBLY

REVISIONS			
REV	ECO NO.	DATE	APPROVED
000	2090	02/21/23	1ST RELEASE

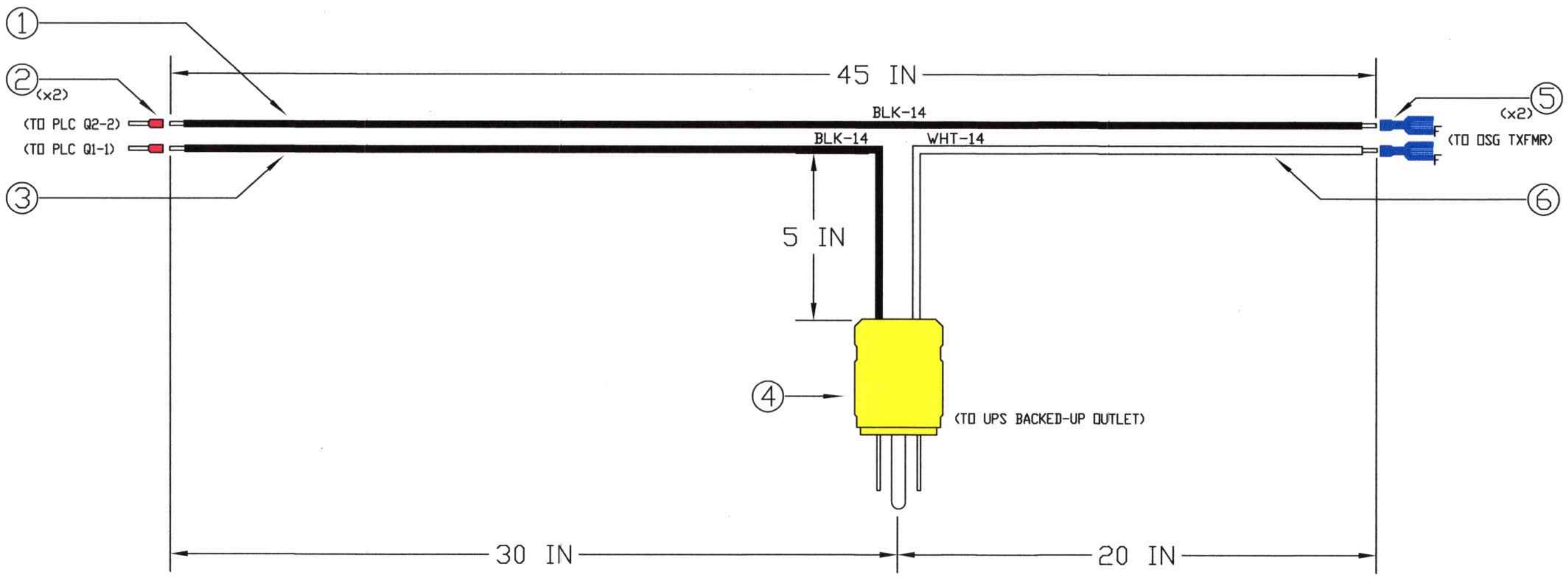

NOTE: ① WIRE IS BLK, 45 IN, 14 AWG, TEW, CSA APPROVED
② FERRULES (P/N-SAVARIA C1890035)
③ WIRE IS BLK, 30 IN, 14 AWG, TEW, CSA APPROVED
④ 15A, 120V PLUG NEMA 5-15P (P/N-PASS & SEYMOUR 5965-YCN)
⑤ FEMALE DISCONNECT 0.250 (P/N-TE-3-350819-2)
⑥ WIRE IS WHT, 20 IN, 14 AWG, TEW, CSA APPROVED
TWIST WIRE PAIRS TOGETHER

THE INFORMATION DISCLOSED HEREIN IS THE EXCLUSIVE PROPERTY OF savaria AND MAY NOT BE USED BY OTHERS WITHOUT PRIOR WRITTEN CONSENT

TITLE: ZENITH CONTROLLER OSG POWER HARNESS

UNLESS OTHERWISE SPECIFIED ALL DIMENSIONS ARE IN INCHES. ALL DIMENSIONS IN [] ARE METRIC
TOLERANCES ON:
.X=±0.1 [.X=±3]
.XX=±0.03 [.XX=±0.8]
.XXX=±0.01 [.XXX=±0.25]
ANGLES X =±2 X =±0.5

MATERIAL: N/A

FINISH: N/A

DO NOT SCALE DRAWING

REMOVE ALL BURRS & SHARP CORNERS

DESIGNED BY:	DESIGN DATE:	SCALE:	REVISION:
		N/A	000
DRAWN BY:	DRAWN DATE:	DRAFTSPERSON:	
C. QUIRK	02/21/23	N/A	
SHEET 1 OF 1	DRAWING NO: 252832		SIZE B

REV.	ECO NO.	DESCRIPTION	REV. BY	APPR. BY	DD/MM/YYYY
0	2532	INITIAL RELEASE	H. SINGH	D. JAEGER	23/07/2024
1	2567	ADJUSTING LENGTHS AND ADDING M/F CONNECTORS	H. SINGH	D. JAEGER	25/11/2024

LUXURY FLUSH DOOR (KRONENBERG) INTERNAL WIRING

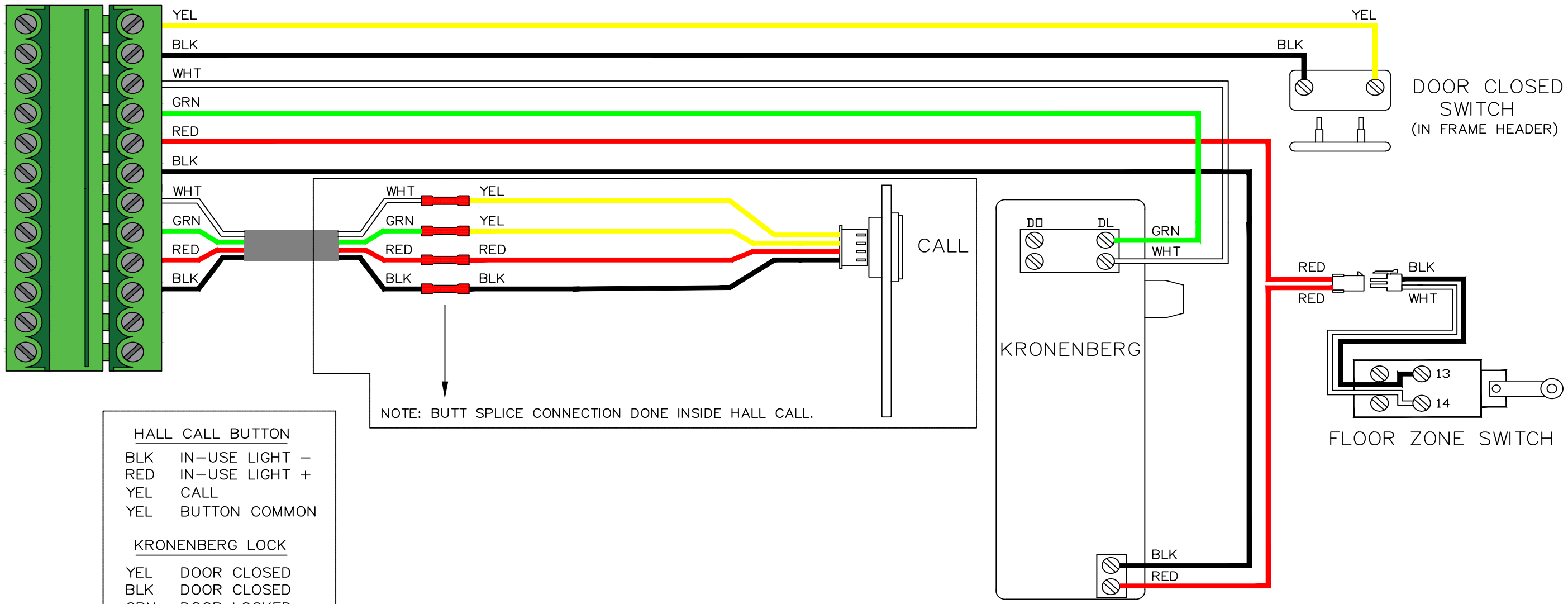

HALL CALL BUTTON

BLK	IN–USE LIGHT –
RED	IN–USE LIGHT +
YEL	CALL
YEL	BUTTON COMMON

KRONENBERG LOCK

YEL	DOOR CLOSED
BLK	DOOR CLOSED
GRN	DOOR LOCKED
RED	SOLENOID +
BLK	SOLENOID –
WHT	DOOR LOCKED

UNLESS OTHERWISE SPECIFIED:
ALL DIMENSIONS ARE IN INCHES.
ALL DIMENSIONS IN [ ] ARE METRIC.
TOLERANCES:
.X= ± .1 [X=±3]
.XX= ± .03 [X.X=± 0.8]
.XXX= ± .010 [X.XX=± 0.25]
ANGLES .X °=± .5°

PROPRIETARY AND CONFIDENTIAL
THE INFORMATION CONTAINED IN THIS DRAWING IS THE SOLE PROPERTY OF SAVARIA. ANY REPRODUCTION IN PART OR AS A WHOLE WITHOUT THE WRITTEN PERMISSION OF SAVARIA IS PROHIBITED.

DO NOT SCALE DRAWING

	NAME	DD/MM/YYYY
DESIGNED BY	H. SINGH	23/07/2024

MATERIAL: N/A

FINISH: N/A

NOTES (UNLESS OTHERWISE SPECIFIED):
-REMOVE ALL BURRS, WELDING SPATTER, SHARP CORNERS, OIL, LUBRICANTS AND OTHER CONTAMINANTS.
- THE DIMENSIONS ON THE PRESENT DRAWING OVERRIDE ANY OTHER DATA (I.E., *.DXF, *.SLDPRT, ETC.).

savaria

TITLE: RESIDENTIAL
LUXURY FLUSH DOOR
INTERNAL WIRING - REMOTE HC

DWG. NO. 326727-HOOK

REV 1

SIZE: A3

SHEET 1 OF 1

REV.	ECO NO.	DESCRIPTION	REV. BY	APPR. BY	DD/MM/YYYY
0	2532	INITIAL RELEASE	H. SINGH	D. JAEGER	23/07/2024
1	2567	ADJUSTING LENGTHS AND ADDING M/F CONNECTORS	H. SINGH	D. JAEGER	25/11/2024

LUXURY FLUSH DOOR (KRONENBERG) INTERNAL WIRING

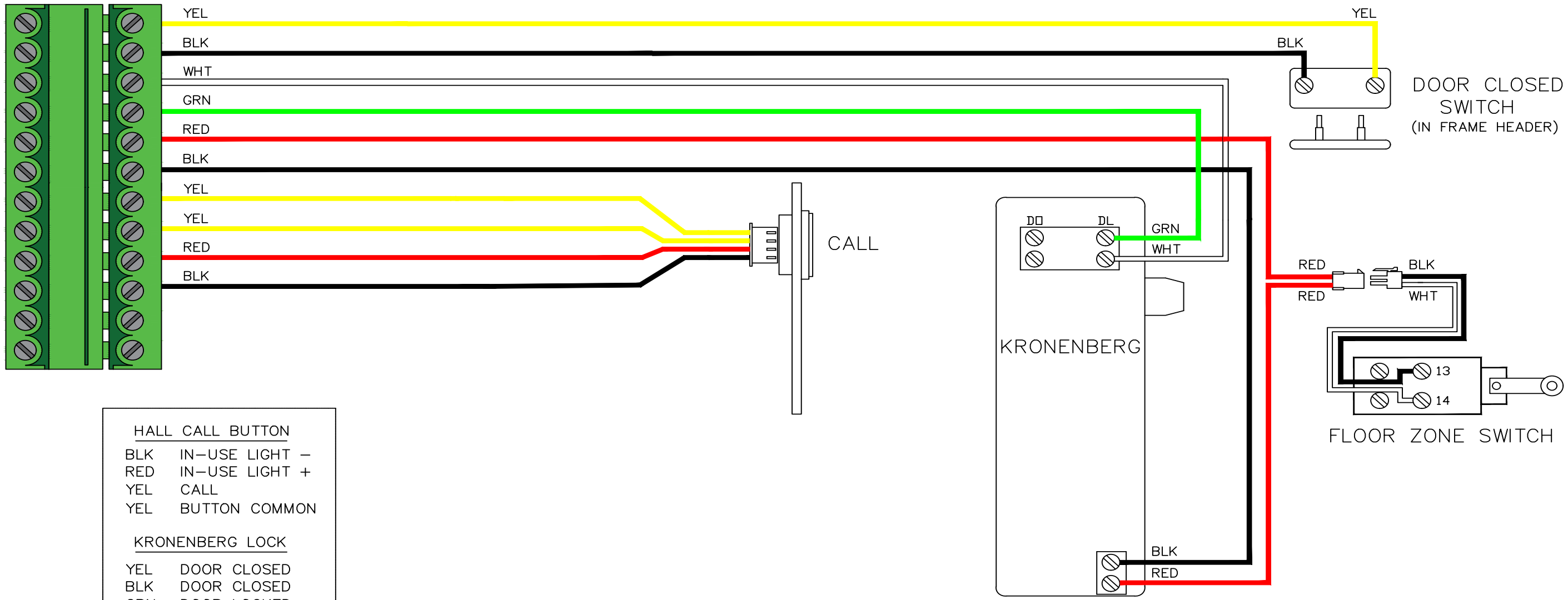

HALL CALL BUTTON

BLK	IN-USE LIGHT −
RED	IN-USE LIGHT +
YEL	CALL
YEL	BUTTON COMMON

KRONENBERG LOCK

YEL	DOOR CLOSED
BLK	DOOR CLOSED
GRN	DOOR LOCKED
RED	SOLENOID +
BLK	SOLENOID −
WHT	DOOR LOCKED

UNLESS OTHERWISE SPECIFIED:
ALL DIMENSIONS ARE IN INCHES.
ALL DIMENSIONS IN [] ARE METRIC.
TOLERANCES:
.X= ± .1 [X=±3]
.XX= ± .03 [.XX=± 0.8]
.XXX= ± .010 [.XXX=± 0.25]
ANGLES .X °=± .5°

PROPRIETARY AND CONFIDENTIAL
THE INFORMATION CONTAINED IN THIS DRAWING IS THE SOLE PROPERTY OF SAVARIA. ANY REPRODUCTION IN PART OR AS A WHOLE WITHOUT THE WRITTEN PERMISSION OF SAVARIA IS PROHIBITED.

DO NOT SCALE DRAWING

	NAME	DD/MM/YYYY
DESIGNED BY	H. SINGH	23/07/2024

MATERIAL: N/A

FINISH: N/A

NOTES (UNLESS OTHERWISE SPECIFIED):
-REMOVE ALL BURRS, WELDING SPATTER, SHARP CORNERS, OIL, LUBRICANTS AND OTHER CONTAMINANTS.
- THE DIMENSIONS ON THE PRESENT DRAWING OVERRIDE ANY OTHER DATA (I.E., *.DXF, *.SLDPRT, ETC.).

savaria

TITLE: RESIDENTIAL LUXURY FLUSH DOOR INTERNAL WIRING

DWG. NO. 326728-H00K

REV 1

SIZE: A3

SHEET 1 OF 1

REV.	ECO NO.	DESCRIPTION	REV. BY	APPR. BY	DD/MM/YYYY
0	2532	INITIAL RELEASE	H. SINGH	D. JAEGER	23/07/2024
1	2567	ADJUSTING LENGTHS AND ADDING M/F CONNECTORS	H. SINGH	D. JAEGER	25/11/2024

LUXURY FLUSH DOOR (KRONENBERG) INTERNAL WIRING

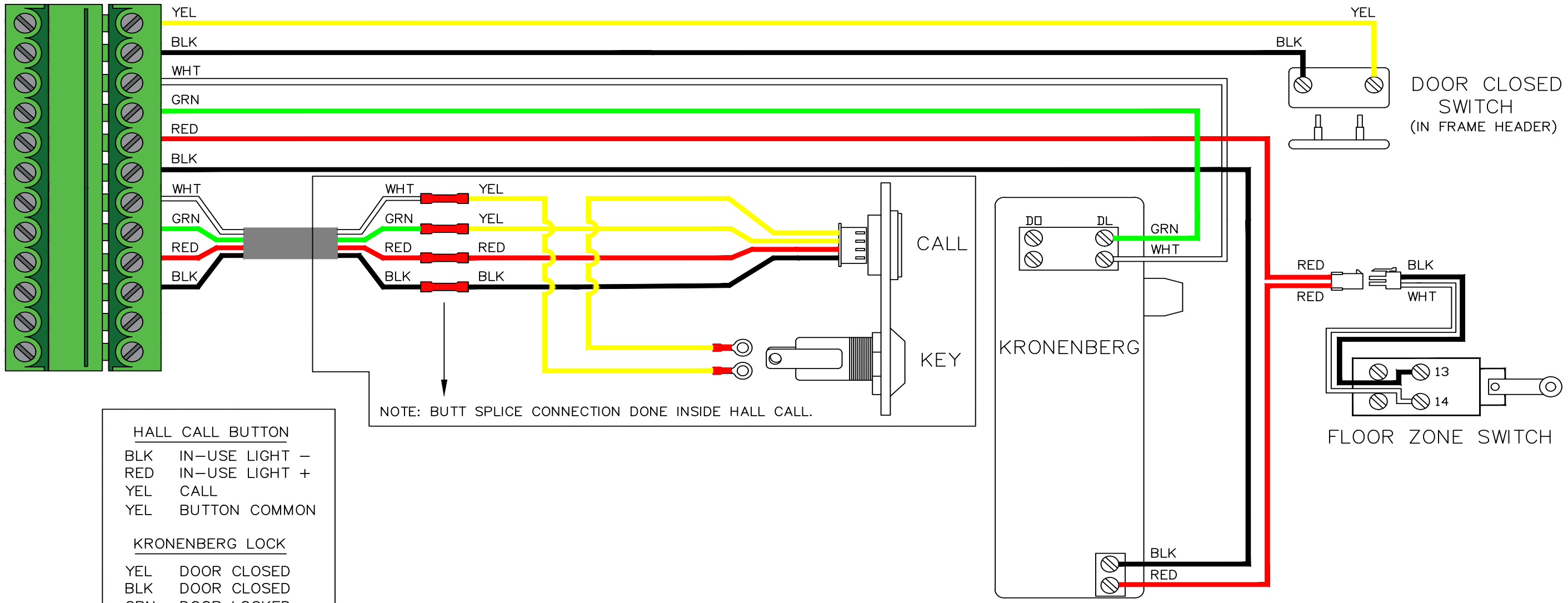

HALL CALL BUTTON

BLK	IN–USE LIGHT –
RED	IN–USE LIGHT +
YEL	CALL
YEL	BUTTON COMMON

KRONENBERG LOCK

YEL	DOOR CLOSED
BLK	DOOR CLOSED
GRN	DOOR LOCKED
RED	SOLENOID +
BLK	SOLENOID –
WHT	DOOR LOCKED

UNLESS OTHERWISE SPECIFIED:
ALL DIMENSIONS ARE IN INCHES.
ALL DIMENSIONS IN [] ARE METRIC.
TOLERANCES:
.X= ± .1 [X=±3]
.XX= ± .03 [.XX=± 0.8]
.XXX= ± .010 [.XXX=± 0.25]
ANGLES .X °=± .5°

PROPRIETARY AND CONFIDENTIAL
THE INFORMATION CONTAINED IN THIS DRAWING IS THE SOLE PROPERTY OF SAVARIA. ANY REPRODUCTION IN PART OR AS A WHOLE WITHOUT THE WRITTEN PERMISSION OF SAVARIA IS PROHIBITED.

DO NOT SCALE DRAWING

	NAME	DD/MM/YYYY
DESIGNED BY	H. SINGH	23/07/2024

MATERIAL: N/A

FINISH: N/A

NOTES (UNLESS OTHERWISE SPECIFIED):
-REMOVE ALL BURRS, WELDING SPATTER, SHARP CORNERS, OIL, LUBRICANTS AND OTHER CONTAMINANTS.
- THE DIMENSIONS ON THE PRESENT DRAWING OVERRIDE ANY OTHER DATA (I.E., *.DXF, *.SLDPRT, ETC.).

savaria

TITLE: RESIDENTIAL
LUXURY FLUSH DOOR - KEYED
INTERNAL WIRING - REMOTE HC

DWG. NO. 326727-K-HOOK

REV 1

SIZE: A3

SHEET 1 OF 1

REV.	ECO NO.	DESCRIPTION	REV. BY	APPR. BY	DD/MM/YYYY
0	2532	INITIAL RELEASE	H. SINGH	D. JAEGER	23/07/2024
1	2567	ADJUSTING LENGTHS AND ADDING M/F CONNECTORS	H. SINGH	D. JAEGER	25/11/2024

LUXURY FLUSH DOOR (KRONENBERG) INTERNAL WIRING

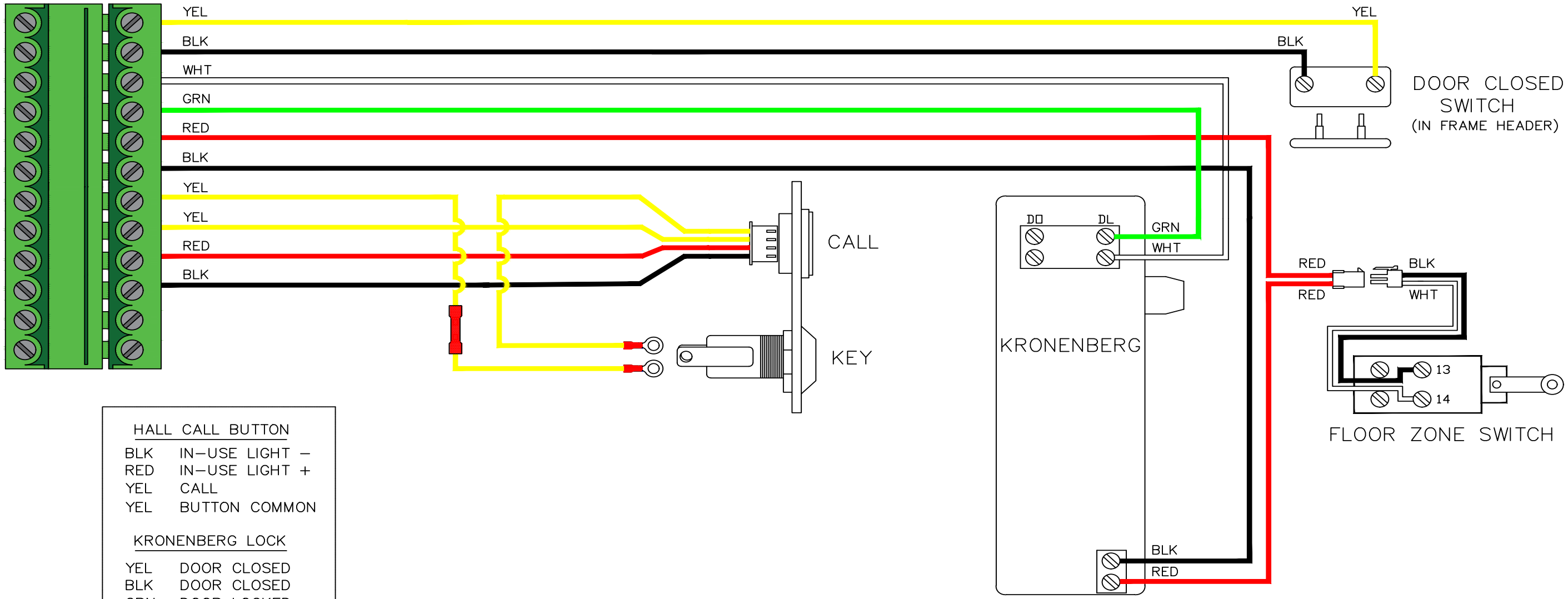

HALL CALL BUTTON

BLK	IN–USE LIGHT –
RED	IN–USE LIGHT +
YEL	CALL
YEL	BUTTON COMMON

KRONENBERG LOCK

YEL	DOOR CLOSED
BLK	DOOR CLOSED
GRN	DOOR LOCKED
RED	SOLENOID +
BLK	SOLENOID –
WHT	DOOR LOCKED

UNLESS OTHERWISE SPECIFIED:
ALL DIMENSIONS ARE IN INCHES.
ALL DIMENSIONS IN [ ] ARE METRIC.
TOLERANCES:
.X= ± .1 [X=±3]
.XX= ± .03 [X.X=± 0.8]
.XXX= ± .010 [X.XX=± 0.25]
ANGLES .X °=± .5°

PROPRIETARY AND CONFIDENTIAL
THE INFORMATION CONTAINED IN THIS DRAWING IS THE SOLE PROPERTY OF SAVARIA. ANY REPRODUCTION IN PART OR AS A WHOLE WITHOUT THE WRITTEN PERMISSION OF SAVARIA IS PROHIBITED.

DO NOT SCALE DRAWING

	NAME	DD/MM/YYYY
DESIGNED BY	H. SINGH	23/07/2024

MATERIAL: N/A

FINISH: N/A

NOTES (UNLESS OTHERWISE SPECIFIED):
-REMOVE ALL BURRS, WELDING SPATTER, SHARP CORNERS, OIL, LUBRICANTS AND OTHER CONTAMINANTS.
- THE DIMENSIONS ON THE PRESENT DRAWING OVERRIDE ANY OTHER DATA (I.E., *.DXF, *.SLDPRT, ETC.).

savaria

TITLE: RESIDENTIAL
LUXURY FLUSH DOOR - KEYED
INTERNAL WIRING

DWG. NO. 326728-K-HOOK

REV 1

SIZE: A3

SHEET 1 OF 1

LANDING CONNECTIONS
(LUXURY FLUSH DOOR–KRONENBERG LOCK)

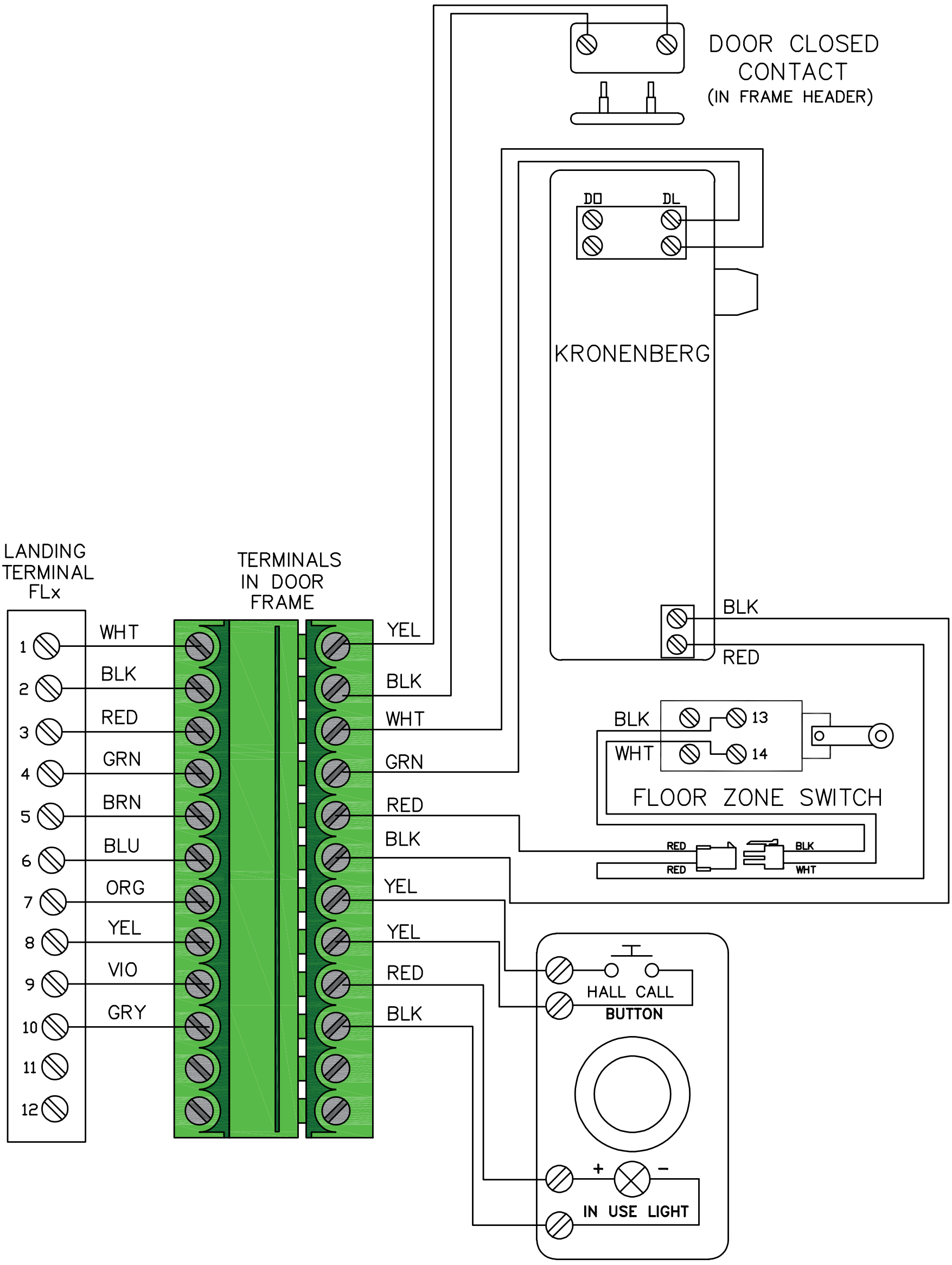

THE INFORMATION DISCLOSED HEREIN IS THE EXCLUSIVE PROPERTY OF savaria™ AND MAY NOT BE USED BY OTHERS WITHOUT PRIOR WRITTEN CONSENT

UNLESS OTHERWISE SPECIFIED ALL DIMENSIONS ARE IN INCHES. ALL DIMENSIONS IN [] ARE METRIC TOLERANCES ON: .X=±0.1 [.X=±3] .XX=±0.03 [.XX=±0.8] .XXX=±0.01 [.XXX=±0.25] ANGLES X =±2.X =±0.5	DO NOT SCALE DRAWING	REMOVE ALL BURRS & SHARP CORNERS		
	DESIGNED BY:	DESIGN DATE:	SCALE: N/A	REVISION: 001
MATERIAL: N/A	DRAWN BY: HARSUMEET.S	DRAWN DATE: MAY 24, 2024	DRAFTSPERSON: N/A	
FINISH: N/A	SHEET 1 OF 1	DRAWING NO: LANDING–FLUSH LUXURY		SIZE B

TITLE: ECLIPSE/INFINITY CONTROLLER LUXURY FLUSH DOOR CONNECTIONS

savaria®

2 Walker Drive
Brampton, ON L6T 5E1
Canada

Toll Free (800) 791-7999
Fax (905) 791-2222

www.savaria.com
Printed in Canada