savaria®

Flush Luxury Door



INSTALLATION GUIDE

Part No. 001414 rev. 000
04-m07-2024

Standard notations

The following notations may be used throughout this guide to emphasize important safety information, mechanical concerns, and other important information. Please review and follow all of these messages.

DANGER	Danger messages indicate an imminently hazardous situation, which, if not avoided, results in death or serious injury. All danger messages feature a standard ISO safety alert symbol followed by the signal word *Danger* in capitalized black lettering on a red background.
WARNING	Warning messages indicate a potentially hazardous situation, which, if not avoided, could result in death or serious injury. All warning messages feature a standard ISO safety alert symbol followed by the signal word Warning in capitalized black lettering on a dark yellow background.
CAUTION	Caution messages indicate a potentially hazardous situation, which, if not avoided, could result in death or serious injury. All caution messages feature a standard ISO safety alert symbol followed by the signal word Caution in capitalized black lettering on a yellow background.
CAUTION	Caution messages that do not include the ISO safety alert symbol indicate a potentially hazardous situation for the machine only, which, if not avoided, could result in damage to the machine. These caution messages include the signal word Caution in capitalized black lettering on a yellow background.
NOTE	Note messages provide information, such as reminders, general information about a previous statement, or additional guidelines that do not fit into the flow of the preceding text. All note messages include the signal word Note in capitalized white lettering on a blue background.

Disclaimer

Follow the steps provided to ensure your safety during installation. Failure to follow instructions renders the Limited Warranty null and void. In addition, any party installing the product who deviates from the installation instructions agrees to indemnify, save, and hold harmless the manufacturer from any and all loss, liability, or damage that may occur as a result of the deviation.

Be sure to adhere to all local building codes and regulations for the installation.

Ensure that you have read through and understand these instructions before beginning.

Materials and tools

IMPORTANT

The following list covers all types of installations but only a few tools will be applicable based on the type.

- Hammer
- Tape measure
- Utility knife/box cutters
- Carpenter's level and square
- Plumb bob and line
- Allen wrenches
- Screwdrivers (slotted and phillips)
- Socket and wrench set
- Needle-nose pliers
- Vise-grip pliers (standard and wide jaw welder's type)
- Carpenter's level
- Carpenter's square
- Tape measure
- Wood shims
- Wood screws
- Nail gun
- Variable speed reversible hand drill $\frac{3}{8}$"
- Carbide drill bits $\frac{3}{8}$", $\frac{1}{2}$"
- Pendant control for construction and inspection
- Scratch point awl
- Wire puller (50' of $\frac{1}{8}$" fish tape)
- Wire strippers
- Wire marker tape
- Wire crimper
- Wire tie-wraps
- Volt-ohm (multi) meter
- Assorted butt electrical wire connectors, crimping tool
- Temporary run light for hoistway
- Rags and cleaning solvent
- Metal and wood stud finder
- Ladder
- Safety items: hard hats, safety glasses, steel toe shoes, heavy gloves, safety harnesses, etc.

NOTE

The tools required will vary based on the type of door being installed. Refer to each section for other materials that may be needed.

Revision history of this guide

- July 04, 2024 – Initial release

Assessment

IMPORTANT
All vertical platform lifts that fall under code B355 and A18.1 MUST have flush doors.

For A17.1 code

The ASME A17.1-2016/CSA B44-16 Safety Code for Elevators and Escalators **(2016 AND AFTER)** mandates the following maximum hoistway door clearances:

- Clearance between the hoistway side of the landing door and the edge of the landing sill shall not exceed 0.75" (19 mm) for swing doors (shown below) and 2.25" (57 mm) for sliding doors.
- Distance between the hoistway side of the landing door or gate and the car door or gate shall not exceed 4" (102 mm). *A measuring tool for this is shown below.*
- Eclipse Residential Elevator design is with a maximum 1.25" (32 mm) running clearance.
- Concrete block/masonry shafts create 3/4 & 4 rule violations.

Measuring tool for accordion car gate and landing door (3/4 & 4 rule)

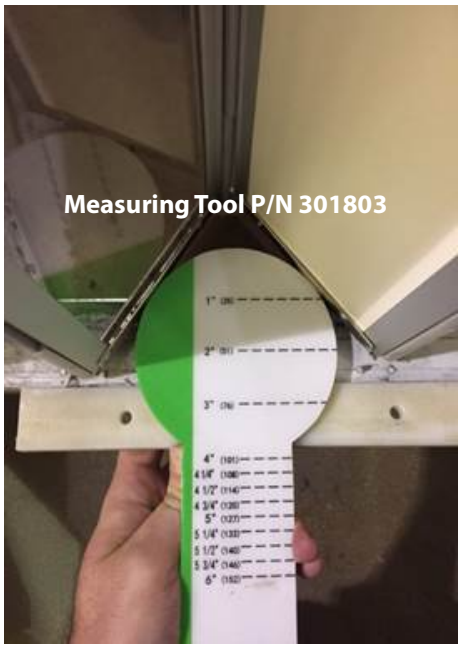

With the measuring tool pressed into the “V” of the accordion car gate, the hoistway side of the landing door must not be more than 4” (102 mm) as shown.

List of steps in this guide

Steps	Page
Door Measurement Requirements	4
Procedure	5
Controller Wiring Connection	11

Door Measurement Requirements

An opening of 42.870" x 83.660" is required for a 36" x 80" door

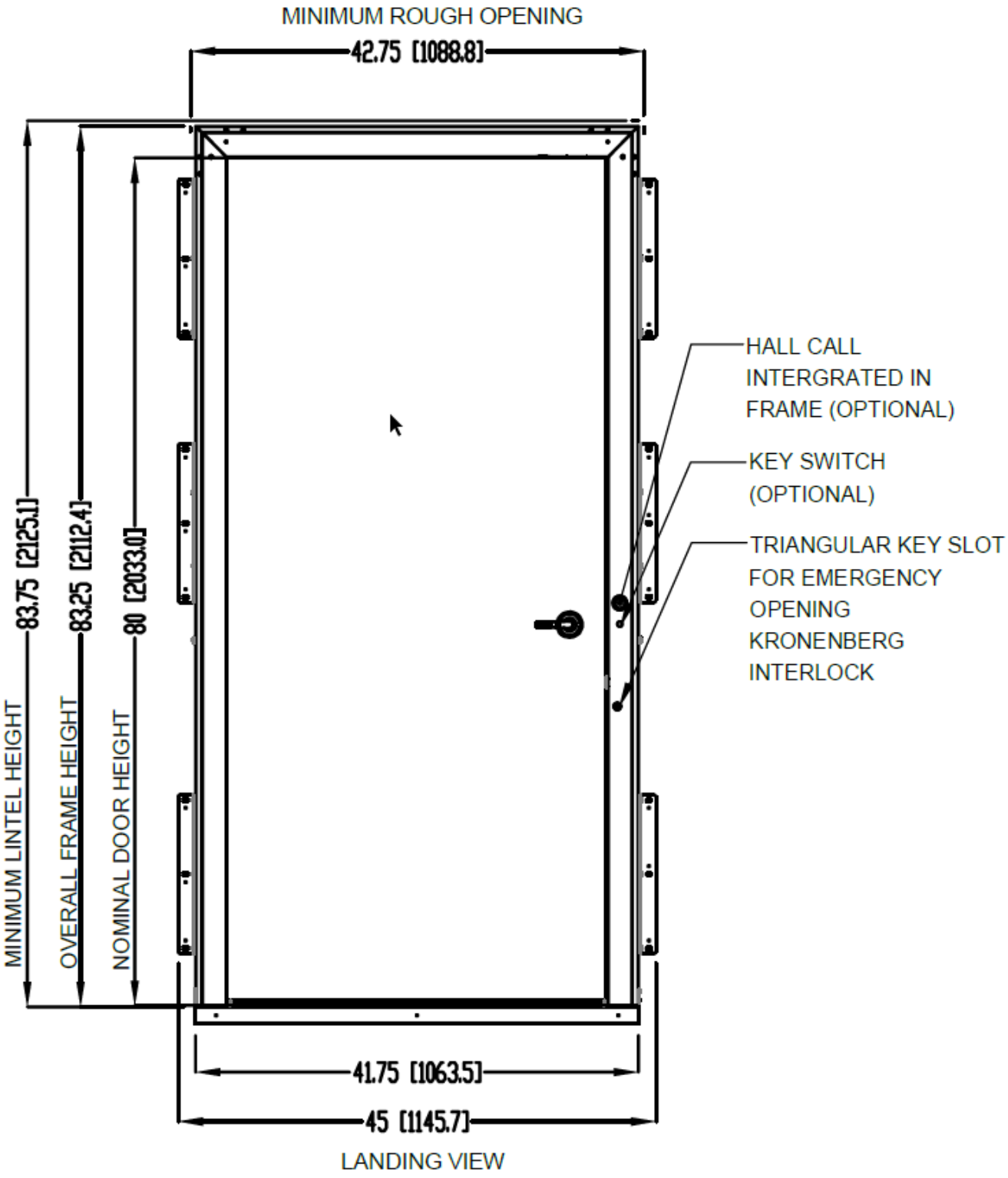

Procedure

1 For easier installation remove the door slab from the frame and start leveling the frame against the wall from inside the hoistway as shown below.

Figure 1



2 Use shims to align the frame properly to the wall. Try to use the angle brackets provided with the frame to fix from the hoistway first. If not depending on site condition you can use the default hole provided in the front portion of the aluminum extrusion.

3 Use #10 flat head construction screws to secure the Frame to the wall using the angle brackets or the extrusion itself as described in step 2.

4 STEP 4:Now install the door slab into the frame, and make sure to loosen all the adjustments in the hinges before assembling. These concealed hinges can be adjusted in all directions. So depending on the installation adjust the hinges so the gap around the door and frame are even. The recommended gap is 3.5 to 4 mm all around.

Figure 2:Horizontal Adjustment



Figure 3: Vertical Adjustment



Figure 4: adjusting the flushness of the door



5 Once the gap is even, check for the lock latching properly in the bolt. If it doesn't adjust the bolt on the door slab to correct it.

Figure 5: Latch bolt Adjustment



6 The two-pin contact beak is provided with a double side tape and screws in the hardware kit. Measure the gap between the top header frame and the door slab (let it be Y). Now from the top of the door slab, the measurement should be X. To calculate **X= 10 – Y**. Centrally align and stick the pin first and close the door to check for any interference. Once everything is okay screw the special screw provided with the split washer on the wooden door slab. (Measurements are in mm)

Figure 6

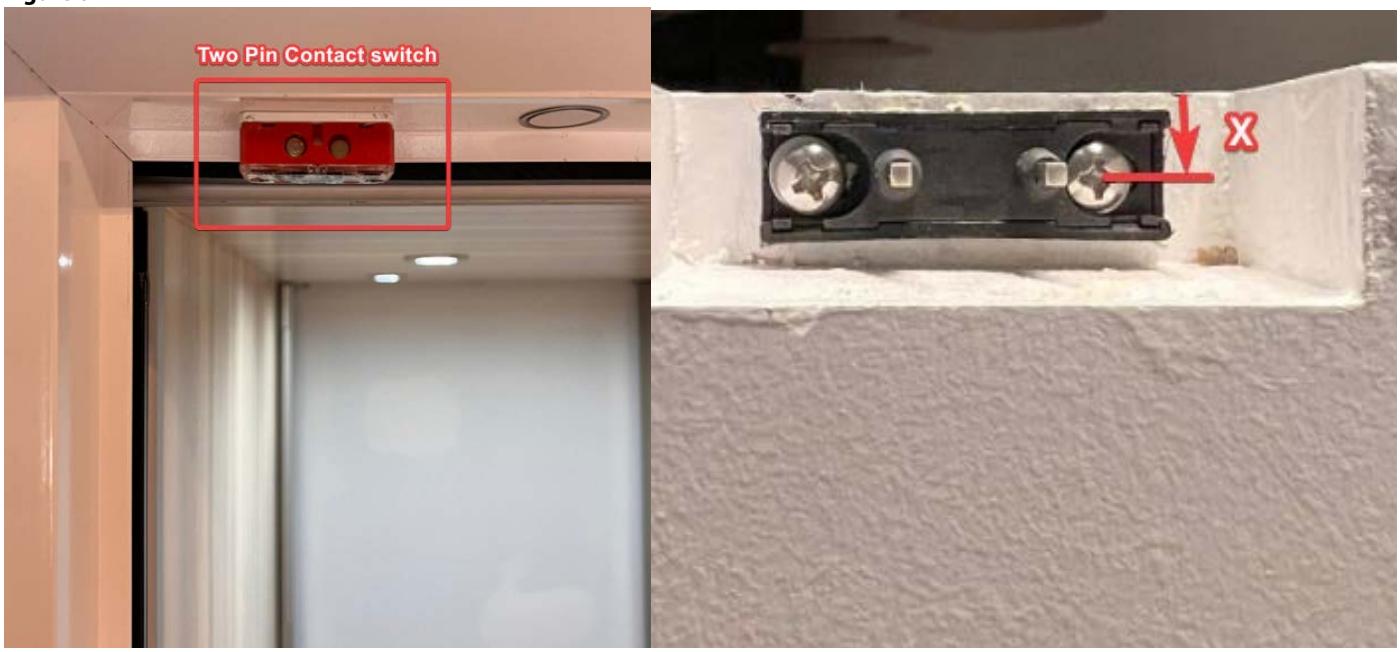

Figure 7: Two-pin contact switch installation

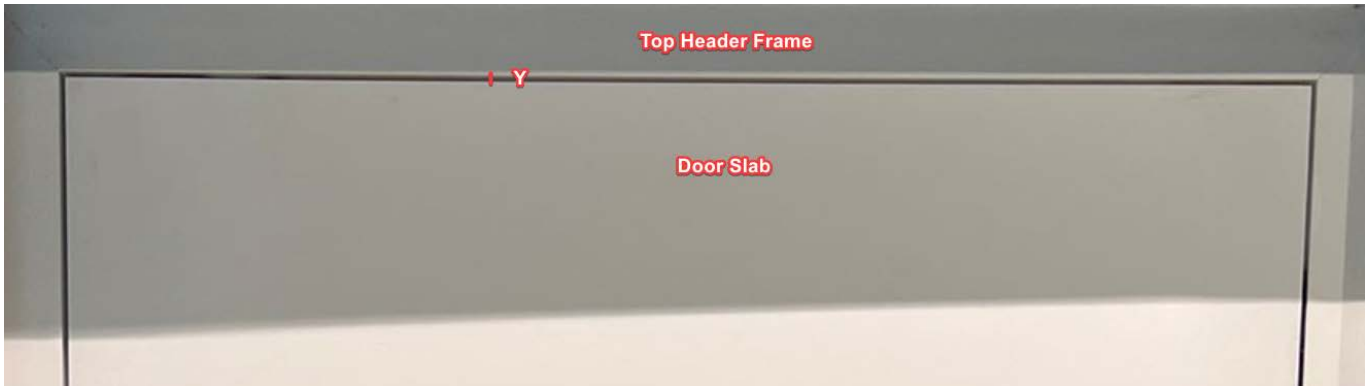

7 Check the overall alignment once again. For a no-trim case start installing the drywall on the frame pockets. Install the corner beads and finish up the drywall by mudding and sanding.

Figure 8: Installed Drywall and Corner bead



Figure 9: Finished New Luxury Flush Door



Controller Wiring Connection

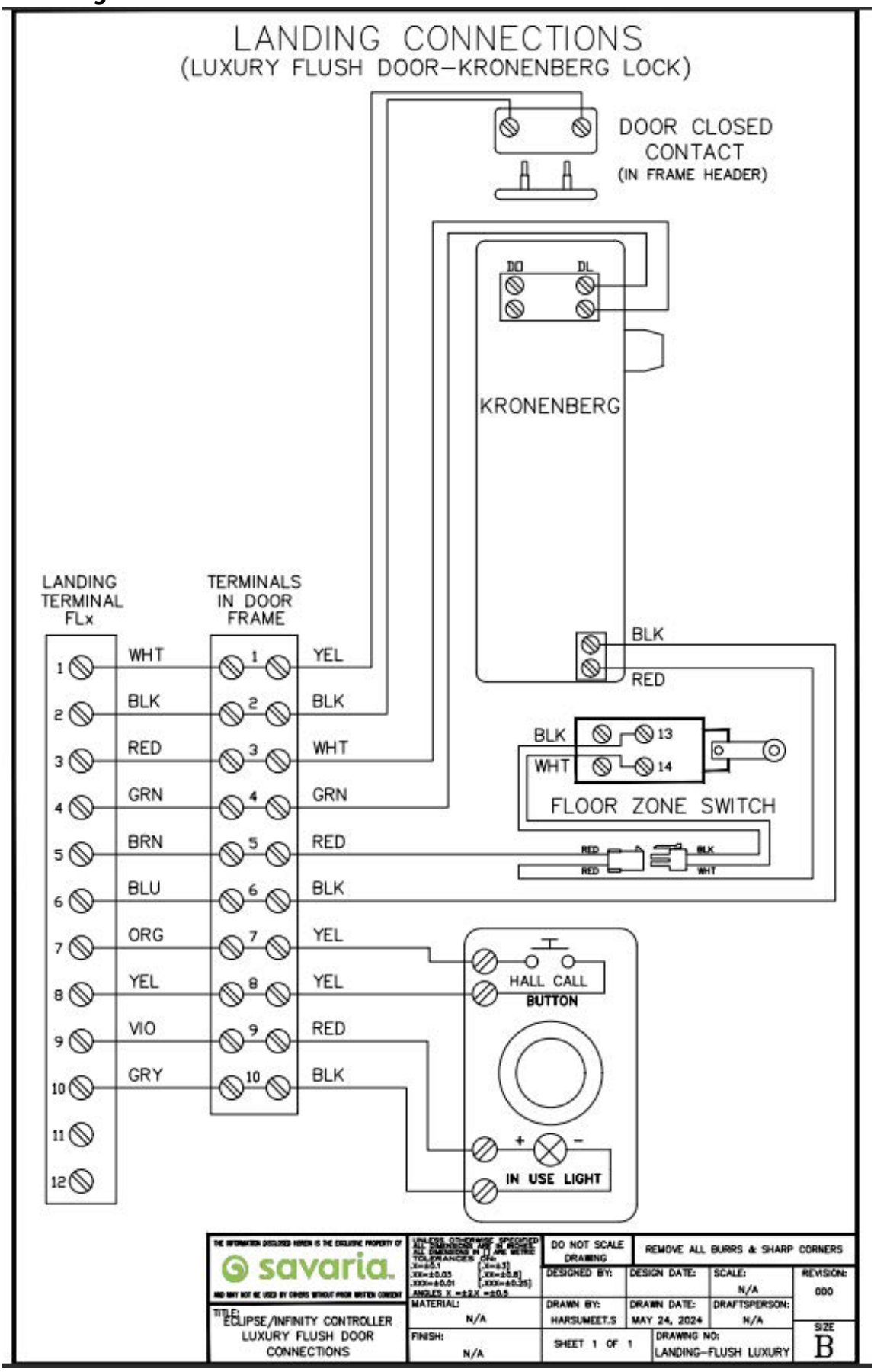

Luxury Flush Door
INSTALLATION GUIDE

Part No. 001414, Rev. 000
© Copyright 2024

Savaria Concord Lifts, Inc.
www.savaria.com

Support
2 Walker Drive
Brampton, Ontario, L6T 5E1, Canada
Toll free: (800) 791-7999
Fax: (905) 791-2222

savaria®