savaria

Zenith

Residential Elevator

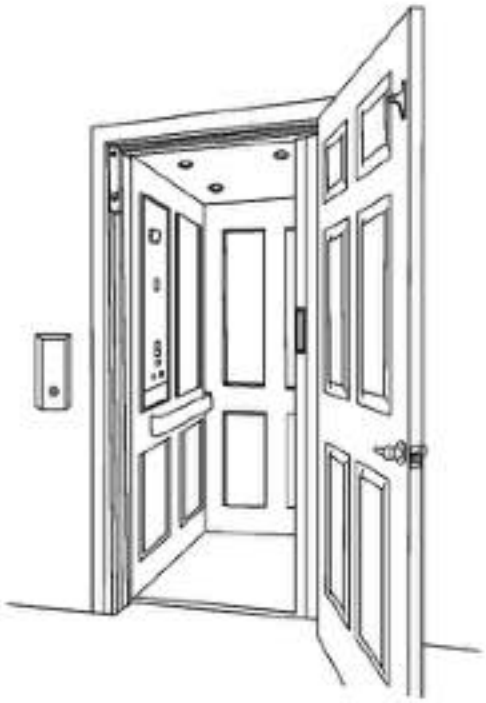

INSTALLATION GUIDE

Part No. 001235, Rev. 035
28-m11-2024

Standard notations

The following notations may be used throughout this guide to emphasize important safety information, mechanical concerns, and other important information. Please review and follow all of these messages.

DANGER	Danger messages indicate an imminently hazardous situation, which, if not avoided, results in death or serious injury. All danger messages feature a standard ISO safety alert symbol followed by the signal word *Danger* in capitalized black lettering on a red background.
WARNING	Warning messages indicate a potentially hazardous situation, which, if not avoided, could result in death or serious injury. All warning messages feature a standard ISO safety alert symbol followed by the signal word Warning in capitalized black lettering on a dark yellow background.
CAUTION	Caution messages indicate a potentially hazardous situation, which, if not avoided, could result in death or serious injury. All caution messages feature a standard ISO safety alert symbol followed by the signal word Caution in capitalized black lettering on a yellow background.
CAUTION	Caution messages that do not include the ISO safety alert symbol indicate a potentially hazardous situation for the machine only, which, if not avoided, could result in damage to the machine. These caution messages include the signal word Caution in capitalized black lettering on a yellow background.
NOTE	Note messages provide information, such as reminders, general information about a previous statement, or additional guidelines that do not fit into the flow of the preceding text. All note messages include the signal word Note in capitalized white lettering on a blue background.

Hazards and cautions

ELECTRICAL SHOCK HAZARD

Do not connect or disconnect wiring while the power is on. Before servicing, disconnect all power to the equipment.

WARNING

SUDDEN MOVEMENT HAZARD

System may start unexpectedly upon application of power. Unpredictable equipment operation may result in death or serious injury.

ELECTRICAL SHOCK HAZARD

Savaria is not responsible for any modifications of the product made by the user. Do not allow unqualified personnel to use equipment. Failure to comply could result in death or serious injury. Maintenance, inspection, and replacement of parts must be performed only by authorized personnel familiar with installation, adjustment, and maintenance. Do not remove covers or touch circuit boards while the power is on.

WARNING

FIRE HAZARD

Do not use an improper voltage source.
Verify that the rated voltage matches the voltage of the incoming power supply before applying power.

WARNING

CRUSH HAZARD

Never connect or disconnect the motor from the controller while the controller is outputting voltage. Improper equipment sequencing could result in damage to the controller or personal injury.

WARNING

Make sure the building ground is connected to the controller ground bus before turning the disconnect on. Improper or no ground can result in shocking hazard and unsafe operation.

DANGER

HAZARD WARNING

Be aware that during the installation, service and maintenance of this equipment, you could or will be exposed to unsafe crushing, shearing and falling hazards.



Disclaimer

Savaria Concord Lifts, Inc. disclaims liability for any personal injury or property damage resulting from the operation of a product that has been modified from the original Savaria design. No person or company is authorized to change the design of this product without written authorization by Savaria.

Revision history

- November 21, 2019 – Initial release
- March 3, 2020 - Added new Appendix E - Savaria Link Option on page 111
- May 12, 2020 - Added note to Step 6 on page 11; Added OSG rope guard install on page 40; Added new Step 32 on page 45; Added new substep 6 on page 52 and new substep 17 on page 53 (re: cab reinforcement brackets); Added new Step 53 on pages 87 and 88
- May 27, 2020 - Revised images on pages 23, 25 and 26
- May 29, 2020 - Revised sub-step 11 on page 25: Revised pages 36 and 37; Added new STEP 33 to install floor zone switch and cam on page 48; Revised photo in manual lowering procedure on page 85
- June 8, 2020 - Added 2019 code below; Revised STEP 53 on pages 88 and 89
- June 12, 2020 - Revised tool list at the right; Revised drawing on pages 10 and 17; Revised STEP 49 on page 83; Revised STEP 50 on page 84; Revised safety test on page 85; Changed to split nut on page 88
- June 24, 2020 - Revised STEP 16 on page 26; Revised drawing on page 28; Added upper overtravel inspection to STEP 50 on page 84
- July 9, 2020 - Revised STEP 32 on page 44; Added STEP 53 - Perform OSG inertia test on page 87
- July 17, 2020 - Revised sub-step 2 of Manual Lowering Procedure on page 83
- July 31, 2020 - Added danger warning on page 2; Revised images on page 31; Revised text on page 81
- August 7, 2020 - Revised STEP 23 on pages 35 and 36; Revised image on page 84
- September 3, 2020 - Added new STEP 48 on page 80 for locks
- September 4, 2020 - Added new sub-steps 7 and 8 on page 22 (re: air gap)
- October 5, 2020 - Added new photo, Figure 9, on page 10
- October 20, 2020 - Replaced Figure 38 on page 24 with a new revision drawing, replaced Figure 42 on page 26 with a more clear view, replaced Figure 43 and added a note on page 26 to add clarity, and revised procedure for reset cable installation on page 37
- December 8, 2020 - Added shoring block step on page 19; revised note on page 33; replaced figure 117 with latest revision drawing on page 59; updated cross-references throughout
- March 30, 2021 - Corrected figures on page 46
- April 29, 2021 - Replaced step with revised information on page 84; corrected details on page 88
- September 01, 2021 - Removed 3" & 5" rule
- May 12, 2022 - Revised pages 10 and 17
- August 4, 2022 - Revised page layout
- August 22, 2022 - Revised pages for pages 35-36, removed manual lowering system on pages 85-87
- August 23, 2022 - revised diagram on page 37
- September 9, 2022 - Added warning for new rail system on page 7.
- September 15, 2022 - revised steps 24 and 51.
- December 09, 2022 - Updated information on page 25.
- January 18. 2022 - Revised steps 17 to 28
- April 26, 2023 - Revised graphics on pages 35, 39, and 41, removed not on page 23, removed step 24.
- October 4, 2023 - Revised pages 7 to 29
- November 6, 2023 - revised pages 29-33, removed steps 21, 23, 24, 26, 27,32, and 33
- March 1, 2024 - Revised page 51, added Appendix F
- March 21, 2024 - Revised page 80-81
- June 24, 2024 - Revised pages 35-37, revised step 28 on page 40
- August 20, 2024 - Revised step 32 on pages 47-48
- November 28, 2024 - Updated Floor programing procedure on page 78
-

IMPORTANT

APPLICABLE CODES

You must ensure that your installation conforms to all local codes and standards including the applicable electrical, building, and elevator/lift codes.

Each region will use a specific year of the code and it is the responsibility of the installing company to confirm which year of the code is applicable.

For the Zenith, the following elevator/lift codes apply:

- ASME A17.1-1996, Part 5
- ASME A17.1/CSA B44-2000, Section 5.3
- ASME A17.1/CSA B44-2004, Section 5.3
- ASME A17.1-2004, Addendum 2005, Section 5.3
- ASME A17.1/CSA B44-2007, Section 5.3
- ASME A17.1/CSA B44, Addendum 2008, Section 5.3
- ASME A17.1/CSA B44-2010, Section 5.3
- ASME A17.1/CSA B44-2013, Section 5.3
- ASME A17.1/CSA B44-2016, Section 5.3
- ASME A17.1/CSA B44-2019, Section 5.3

Tools and materials

- Allen wrenches
- 21 mm wrench for shackles
- 30 mm wrench for rope tension nuts
- Socket and wrench set
- Screwdrivers (slotted and phillips)
- Carpenter's level and square
- Reversible hand drill $\frac{1}{2}$" and carbide drill bits $\frac{1}{2}$", $\frac{1}{4}$"
- Hammer drill for concrete fasteners
- Pry bar
- Chain hoist
- Hand dolly
- Pendant control for construction and inspection
- Scratch point awl
- Plumb bob and line
- Chalk line
- Wire puller (50' of $\frac{1}{8}$" fish tape)
- Vise-grip pliers (standard and wide jaw welder's type)
- 100 foot (30 m) extension cord (minimum 14 gauge wire)
- 10" medium cut file (for filing joints)
- Scaffolding or ladders and planks to aid in rail assembly
- Chains and nylon straps for hoisting rails and motor
- Wire strippers
- Trouble light for hoistway
- $\frac{1}{2}$" rope, minimum length is maximum length of hoistway
- Rubber mallet
- Coated steel shims, minimum 4" square
- Wall anchors
- 14 gauge wire for motor and light wiring
- Assorted electrical wire connectors and crimping tool
- $\frac{1}{2}$" electrical box connectors
- 25' tape measure
- Needle-nose pliers
- Side cutters
- Tin snips (to cut metal strapping around skid)
- Wire crimper
- Drift pin
- Large crescent wrench
- Sawzall
- Safety items: hard hats, safety glasses, steel toe shoes, heavy gloves, safety harnesses, etc.
- Box knife
- Scissors
- Wire marker tape
- Shop vac
- Rags and cleaning solvent
- Rail lubricant
- Mineral spirits
- Silicone sealant
- Materials to close off hoistway during installation
- Metal and wood stud finder
- Wire tie wraps
- Volt-ohm (multi) meter

Check site specifics

1 Prior to delivery, ensure that you have clear access into the building and a clear route to the installation site.

2 For site verification, use the following:
   - Site plan drawings (also referred to as site installation drawings or shop drawings)
   - Written and verbal direction from the owner, electrical and hoistway contractors, inspector, and architect

3 Ensure the pit depth, the travel, and the floor length and width dimensions are the same as on the site plan drawings. If they do not match, the hoistway setup may require modifications or the chains and hoistway cables may require replacement. Contact Savaria's *Technical Support* at 1 (800) 791-7999 for immediate assistance.

4 Ensure the hoistway overhead clearance is the same as on the site plan drawings. If it does not match, contact Savaria's *Technical Support* for immediate assistance.

5 Ensure the hoistway width and depth are no smaller than the minimum dimensions on the site plan drawings.

6 Ensure the hoistway walls are plumb to avoid running clearance faults.

7 Ensure the rail side of the hoistway wall is square with the door openings.

8 Ensure the hoistway construction of the vertical stacks is the same as on the site plan drawings and that construction is plumb, square, and solid.

9 Ensure electrical installation of the fused main disconnect with auxiliary contact (230 VAC - 30 Amp) and the fused lighting disconnect (120 VAC - 15 Amp) are complete.

10 Ensure there are no fire and safety issues. Contact Savaria's *Technical Support* if fire and safety issues are found.

11 Ensure the motor location and direction at the top of the hoistway is in line with the Motor Access Door. The hand crank side of the motor must face the Motor Access Door for initial hand cranking when installing the chains and for hand cranking due to either complete power failure or safety lowering. Contact Savaria's *Technical Support* if the motor crank side does not face the Motor Access Door.

12 Ensure the maximum total travel between top of pit to bottom of floor is not greater than 12 feet without additional support. Ensure each subsequent bottom of floor to bottom of next floor is not greater than 12 feet. Contact Savaria's *Technical Support* if the maximum travel exceeds 12 feet.

NOTE

IMPORTANT!
A hoistway lifting beam is required for every installation. The beam can be temporary OR permanent.

Unpack and check shipment

1 Prior to installation, unpack the shipment and check the contents.
2 Check the condition of the shipment for any damage; installing damaged parts can lead to safety violations and void the limited warranty. Contact Savaria's *Technical Support* if any parts are damaged.

NOTE

If possible, take a photograph of any damaged part(s).

Installation safety tips

Follow these safety tips during installation. Please read and understand this entire manual before installing the elevator.

1 Proper, safety-approved protection for your head, eyes, hands, and feet should be worn during all phases of the installation.
2 Use extreme caution while raising the elevator components into position to avoid personal injury or damage to the equipment.
3 Use extreme care when operating units without panels in place to avoid personal injury from moving parts.
4 Power should be removed from the drive unit and operating systems when any electrical work or adjustments are being done.
5 To avoid possible electrical shock, you should not work on a wet floor or enter an elevator or elevator pit when it contains water.
6 Use only specified anchor fasteners.
7 Never work alone and always be aware of fellow workers and their safety.
8 **DO NOT** wear loose-fitting clothing during installation. Shirt cuffs should be buttoned to avoid being caught in moving machinery.
9 Ensure that all electrical and mechanical equipment is properly enclosed.
10 Never place yourself in a position where you may be harmed (i.e., between shear points, under heavy objects, in the path of moving parts, etc.).
11 Never stand directly under the cab or inside the hoistway during testing or when power is being supplied to the cab itself.
12 Hoistway doors should be locked or nailed shut any time the area is left unattended.

IMPORTANT

IMPORTANT SAFETY NOTICE!

ZENITH COUNTERWEIGHT LOADING

USE THE GUIDE BELOW TO ADD COUNTERWEIGHTS TO AVOID LOSS OF TRACTION DURING INSTALL

UPPER COUNTERWEIGHT CARRIAGE	QUANTITY 0.5" FILLER WEIGHT
SLING & ROPES	18

LOWER COUNTERWEIGHT CARRIAGE	QUANTITY 1.0" FILLER WEIGHT
CAB PLATFORM	2-3
CAB WALLS	2-4
ROOF & CEILING	2
DOORS & OPERATOR T1 CAB	2
DOORS & OPERATOR T2 CAB	2

List of steps in this guide

Steps	Page
Assemble lower back rail section	7
Mark centerline and position pit plate	9
Secure lower back rail section to pit plate	9
Temporarily anchor lower back rail section	10
Install pit buffers	12
Install counterweight carriage	14
Assemble upper back rail section(s)	14
Install upper back rail section(s)	15
Temporarily anchor upper back rail section(s)	16
Install lower front rails	17
Install upper front rails	17
Permanently anchor rail sections to wall	21
Install shoring blocks	18
Install motor raft	20
Install motor and sheave assembly	22
Install sling	25
Install elevator cables	29
Install counterweights	32
Connect power supply and motor	34
Install Overspeed Governor	34
Install overspeed tensioner assembly	35
Install overspeed governor (OSG) cable	35
Install OSG slack rope switch assembly	37
Install pit stop switch (as required)	38
Set safeties	38
Install counterweight safety brake blocks (if applicable)	40
Install selector (tape reader) and tape	43
Install hoistway access down limit switch and cam	46
Install light screens	47
Assemble cab	49
Install car operating panel (COP)	52
Install phone	53
Install car top box	54
Install traveling cables	55
Install cab gate pocket	56
Install cab gate	57
Install gate operator	61
Connect gate operator wiring	65
Adjust gate operator board and limit switches	66
Install and wire manual gate switch	70
Install hands-free phone (if equipped)	71
Install hall calls	75
Interlock installation	75
Program COP position indicator (if required)	76
Test elevator operation	84
Perform safety test	85
Perform counterweight safety test and reset (if applicable)	86
Perform OSG inertia test	87
Before leaving job site	88
APPENDIX A: P-Tool Information	89
APPENDIX B: Diagnostic Beep Codes	95
APPENDIX C: Maintenance	95
APPENDIX D: Cab Information	96
APPENDIX E: Savaria Link Option	112
Appendix F RATH 2400 Installation and Operation	113

NOTE

Follow the instruction steps to ensure your safety during installation. Failure to follow instructions renders the Limited Warranty null and void. In addition, any party installing the product who deviates from the installation instructions agrees to indemnify, save, and hold harmless the manufacturer from any and all loss, liability, or damage that may occur as a result of the deviation.

Step 1
Assemble Lower Back Rail Section

NOTE

After unwrapping the guide rails, be sure to wipe them down with a shop towel to ensure they are clean.

1 Ensure the shipped rail heights match the plan drawings.
2 For the bottom rail assembly, ensure the rails at the right have the male end facing down and the rails at the left have the female end facing down. Secure the rails to the pit plate using the hardware provided.

Figure 1:

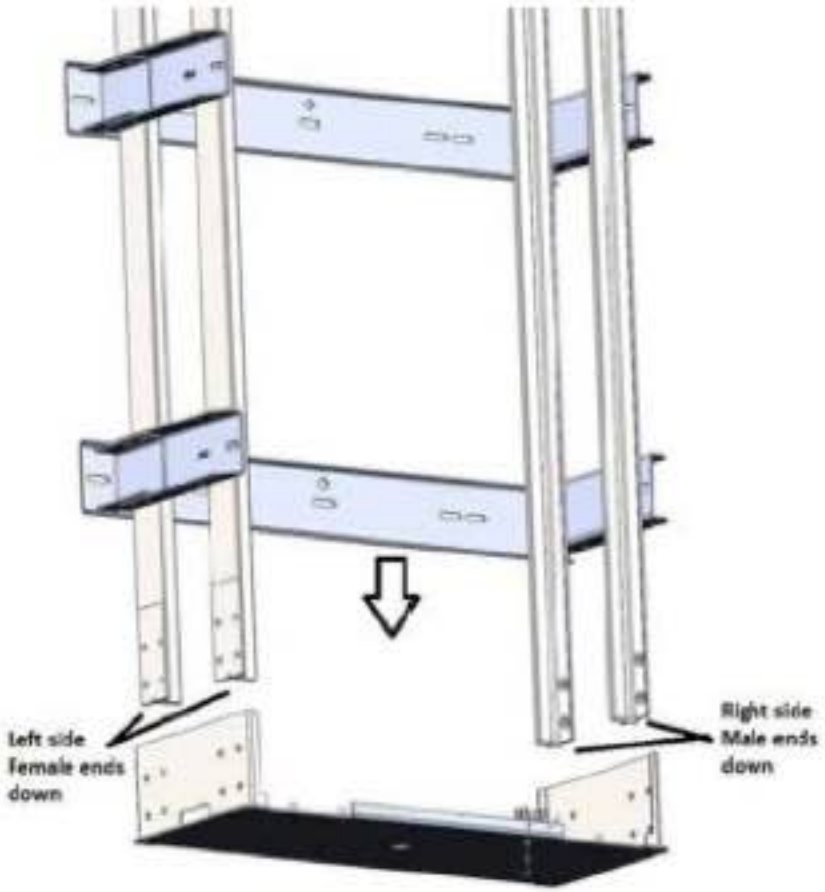

Figure 2: Male End and Female End



Male end



Female end

3 Assemble the following components using the hardware from the kit below (where XX is the rail length).
   - Secure the 3 rail wall brackets to the 2 T-rails (4 bolts per side with corresponding washers and nuts).

470500-XX-HW, Rail Assembly Hardware Kit	
1/2-13X1.5 HEX HEAD BOLT	102200
1/2" FLAT WASHER	102189
1/2"-13 NUT	101106
1/2" SPRING WASHER	102193

NOTE

- Ensure the DIAMOND CUTOUT is at the top of the rail wall brackets when assembling.
- Ensure all rail wall bracket bolts are facing towards the BOTTOM of the rails when assembling.

Figure 3
Secure rail wall brackets to T-rails



Figure 4
Assembled lower back rail section

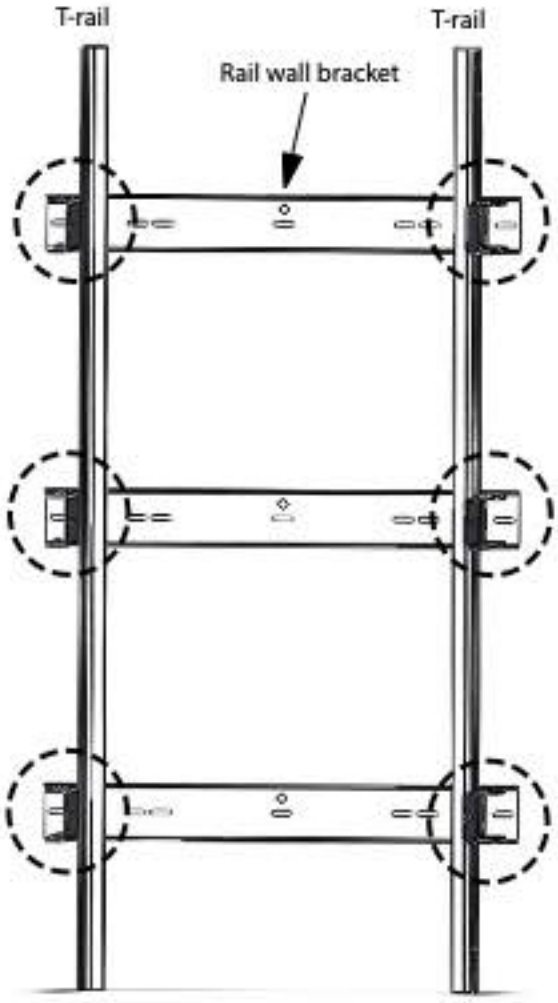

Step 2
Mark Centerline and Position Pit Plate

NOTE

Ensure the hoistway dimensions are the same as those on the plan drawings. Check the pit depth, total travel, hoistway width, hoistway depth and overhead.

1 Use a chalk line to mark the rail centerline (CL) on the hoistway wall or along the front edge of the rail wall brackets.

2 Ensure the pit is clean of debris and then move the pit plate into position in the hoistway.

Figure 5:

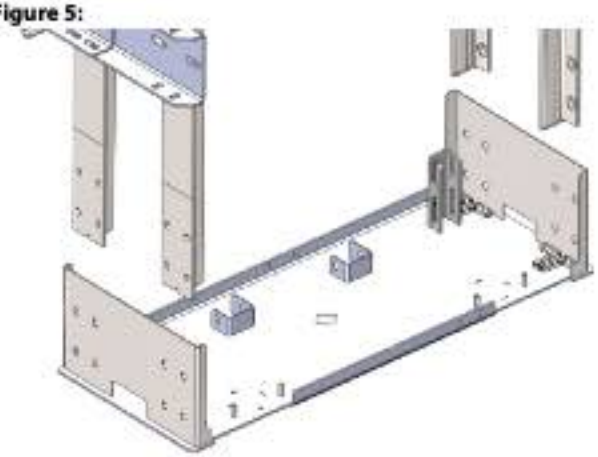

Step 3
Secure lower back rail section to pit plate

1 Place the lower back rail section inside the pit plate and stand it up against the hoistway wall.

2 Secure the lower back rail section to the pit plate using the hardware from the kit below (4 bolts per side with corresponding washers and nuts).

- **NOTE:** The bolts heads MUST be on the inside facing outward.

470300-HW, Pit Plate Hardware Kit	
1/2-13X1.5 HEX HEAD BOLT	102200
1/2" FLAT WASHER	102189
1/2"-13 NUT	101106
1/2" SPRING WASHER	102193

Figure 6
Secure lower back rail section to pit plate

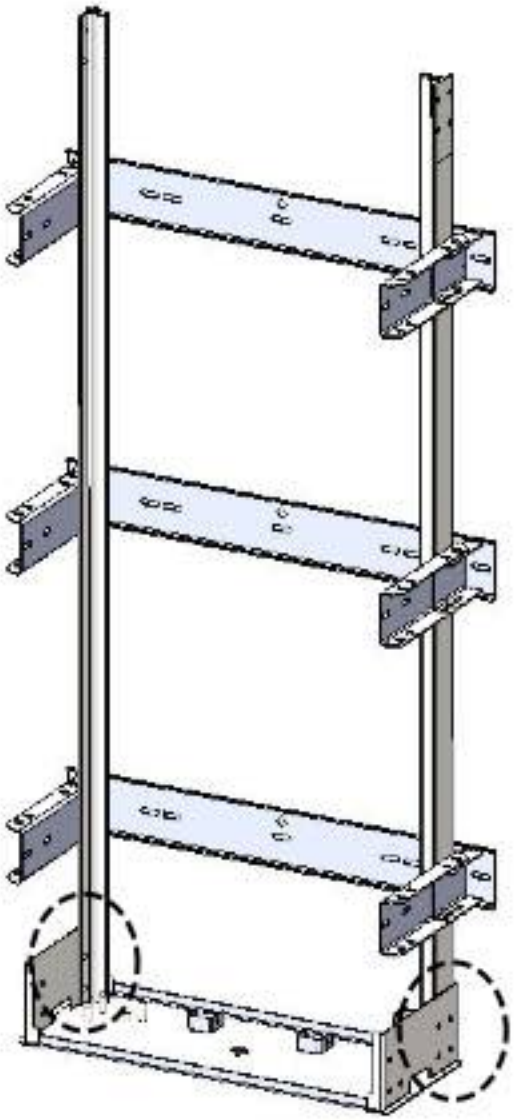

Step 4
Temporarily anchor lower back rail section

1 Position the lower back rail section so the rail wall brackets are centered on the plumb line.

Figure 7
Rail wall brackets on centerline

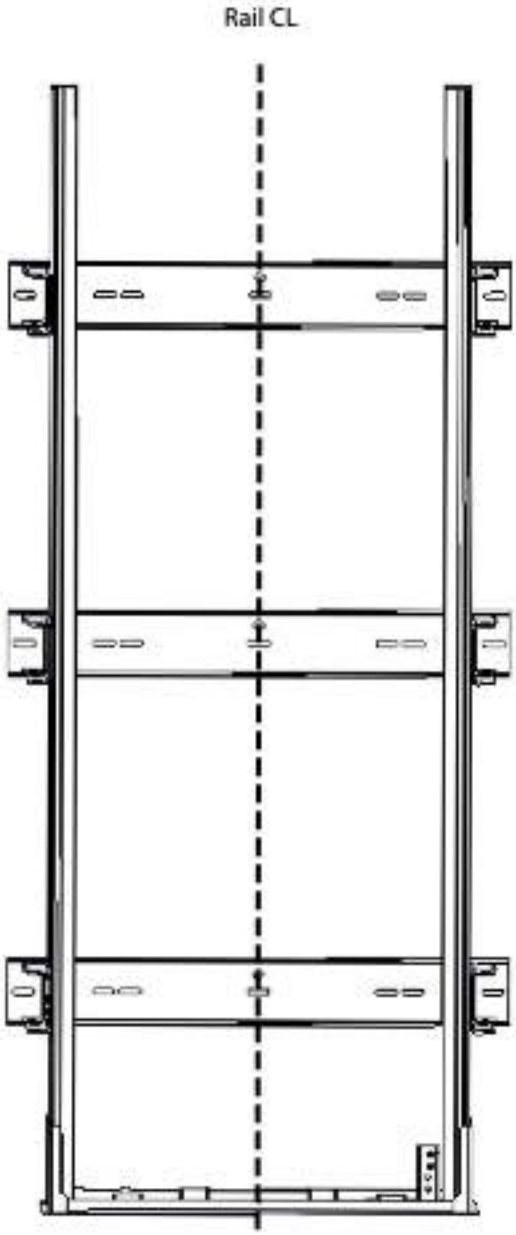

2 Temporarily anchor the rail section to the hoistway wall through the middle hole of the TOP and BOTTOM rail brackets. Use appropriate hardware for lagging to either a wooden wall or a concrete wall.

IMPORTANT

Note that the anchors provided by Savaria are standard/typical anchors and are not suitable for all site conditions. Always make sure the anchors used are proper for the type of wall on site.

Figure 8
Temporary anchor positions (lower rail section)

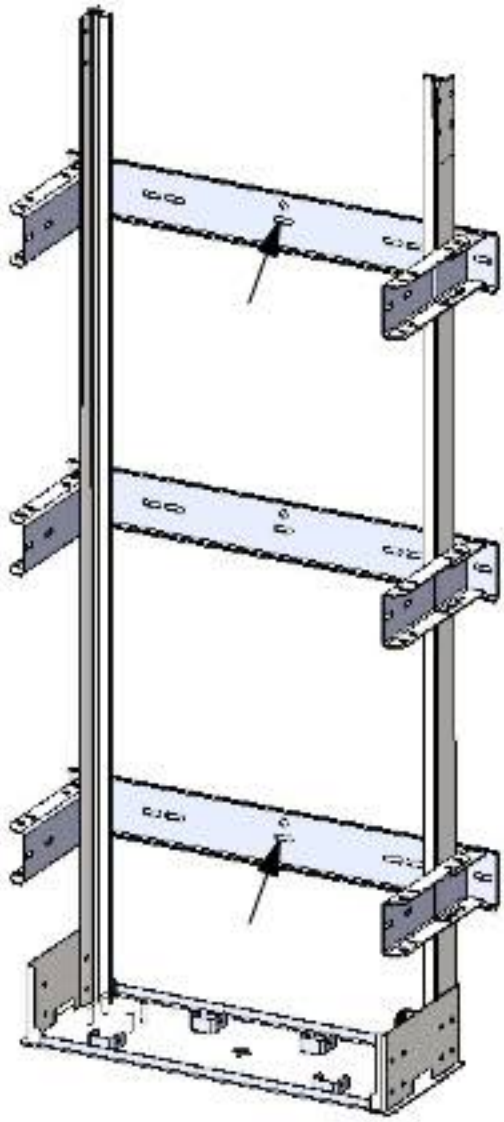

3 Establish how plumb the rail wall is and set the lowest rail wall bracket to the rail distance based on the farthest point of the rail wall.

4 Snug the T-rail on the lowest rail wall bracket at the proper distance from the wall based on how plumb the rail wall is.
   - **NOTE:** A T-rail should NEVER be closer than 3" (76.2 mm) from the rail wall to the inside of the "T". See the illustration below.

5 With the top and bottom snugged, push the middle bracket against the wall and tighten.

Figure 9
Rail distance (maximum)

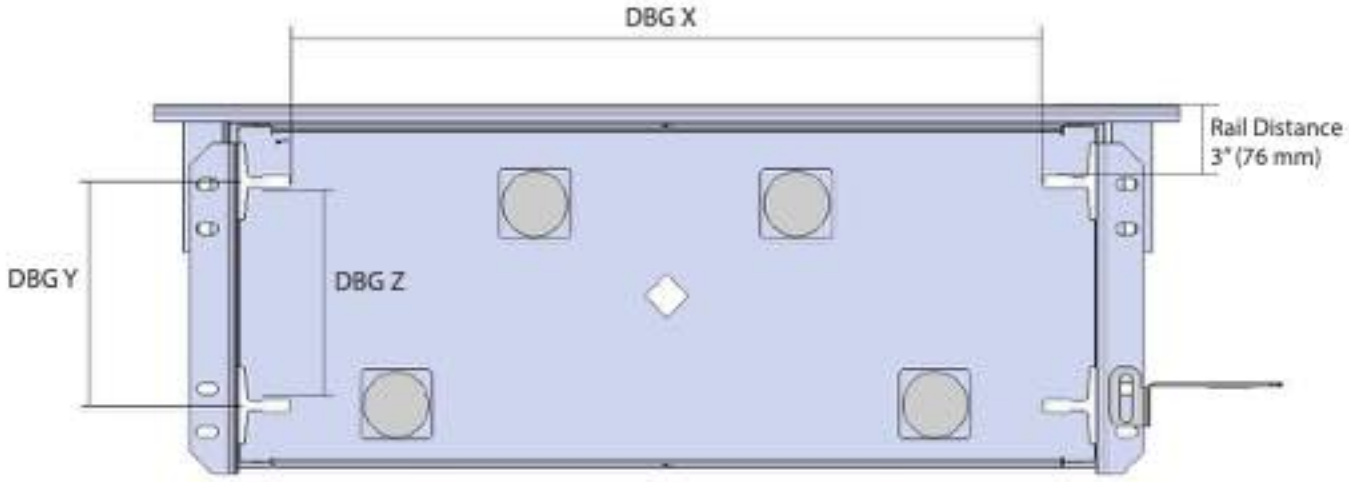

Guide Rail DBG
X = 34.5" (876.3 mm)
Y = 10.25" (260.35 mm)
Z = 9.62" (244.35 mm)

NOTES
X is T-rail to T-rail.
Y is center of rail to center of rail.
Z is inside face of rail to inside face of rail.
Rail Distance is rail wall to inside face of rail.

Figure 10
DGB X and Z measuring tool



6 If required, use the shims provided to achieve DBG X on the pit plate and the motor raft. Different thickness shims are supplied, use the ones required until the correct DBG X is achieved. Install them as shown in below figures.

Figure 11
Shims to achieve correct DBG X

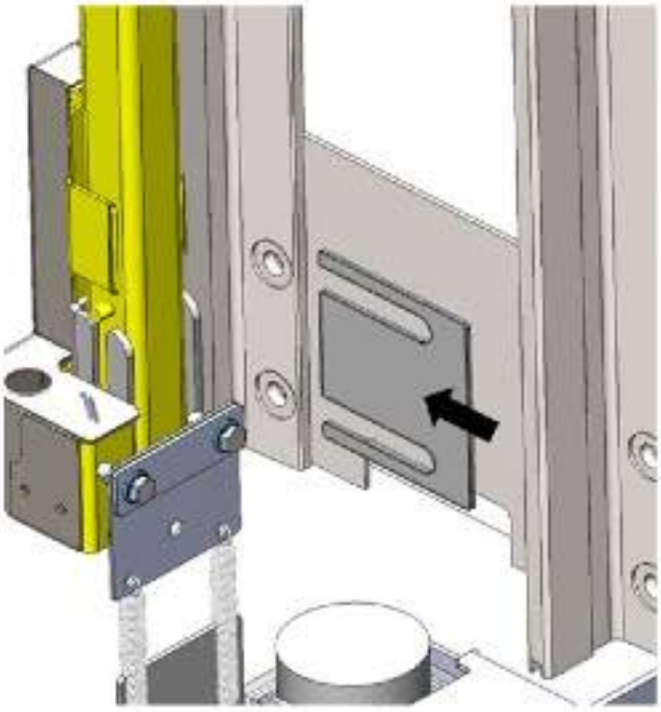

Figure 12
Install shims as required

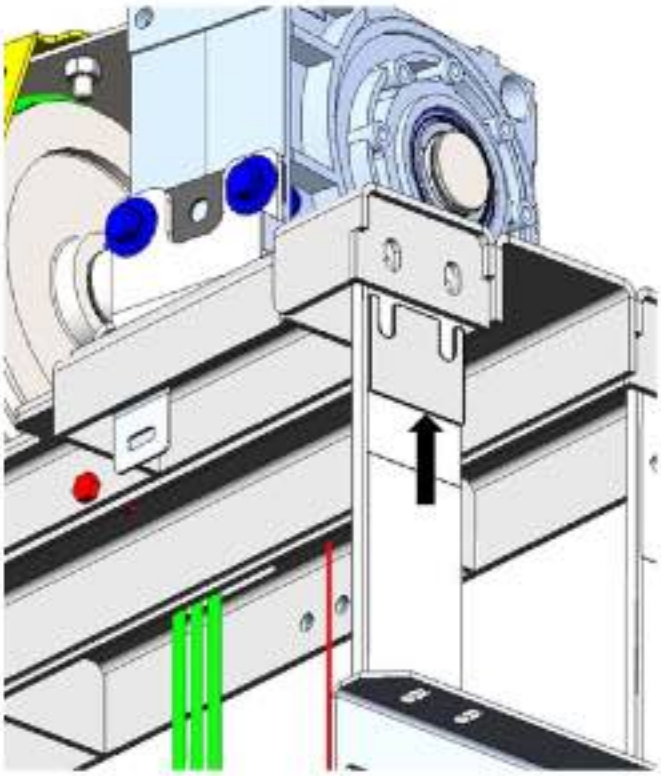

Step 5
Install pit buffers

1 Install the 2 short pit buffers (for the sling) at the front of the pit plate (short buffers). Secure each buffer in place using 1 bolt and corresponding hardware from the kit below.

470300-HW, Pit Plate Hardware Kit	
1/2X13X4" HEX HEAD BOLT	107466
1/2"-13 LOCK NUT	101106

2 Install the 2 tall pit buffers (for the counterweight) at the rear of the pit plate. Secure each buffer in place using 1 bolt and corresponding hardware from the kit above.

Figure 13
Install pit buffers

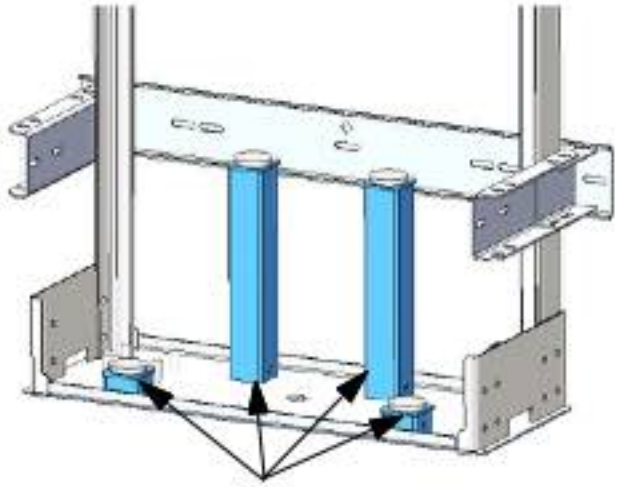

3 Install the rubber bumpers on top of the pit buffers.

Step 6
Install pit prop

The purpose of the pit prop is to provide 36" of pit in conformance with ASME/ANSI A17.1, Rule 5.2.1.4.2, thereby, providing an area in the pit for maintenance and inspection.

Installation

NOTE

Be sure to install the pit prop on the buffer post closest to the lowest landing entrance.

Secure the pit prop to the short pit buffer (at the entrance side of the unit) using 2 bolts and corresponding hardware from the following kit.

470300-HW, Pit Plate Hardware Kit	
1/2X13X5" HEX HEAD BOLT	107473
1/2"-13 LOCK NUT	101106
1/2" FLAT WASHER	102189
1/2" SPRING WASHER	102193

Figure 14
Install pit prop

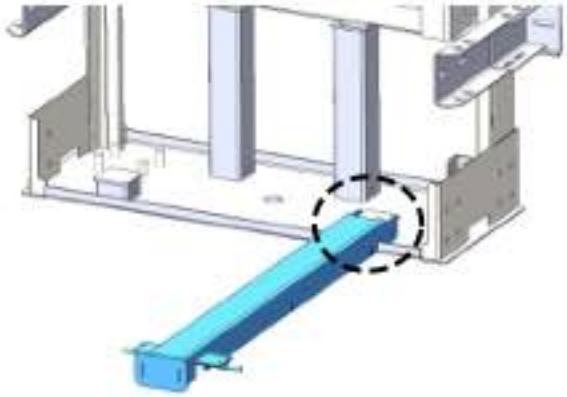

Storage

During normal operation of the elevator, the prop is lowered to its storage position, flat on the floor of the pit (as shown below).

Figure 15
Pit prop resting position

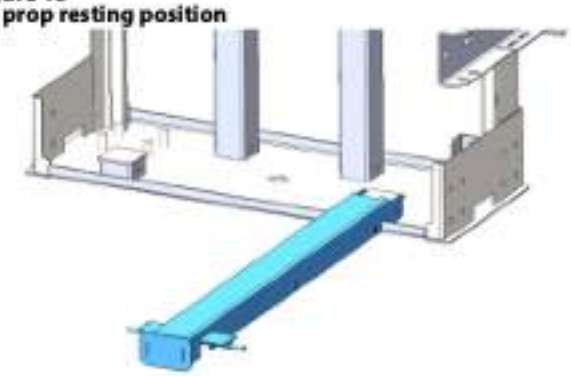

Operation

⚠ WARNING

Before entering the pit area you MUST raise the pit prop to its fully upright position and lock it in place using the safety latch.

The pit prop is designed so that without complete bodily entry into the pit, the prop can be lifted up and locked in place using the safety latch.

In this position, the prop will physically stop and hold the loaded car at the overspeed governor tripping speed. It will immediately stop the downward movement of the elevator car and support the loaded weight of the car without causing stresses and deflections in the car frame and platform members.

Figure 16
Pit prop engaged position (safety latch locked in place)

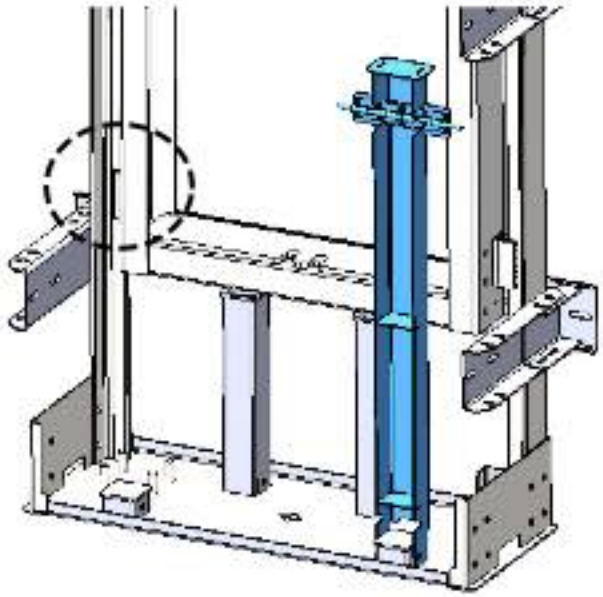

Deployment

Position the elevator so the car platform is a minimum of 5 feet (1524 mm) above the pit floor. Use the manual unlocking device to open the lower landing door.

The pit prop can be deployed without full bodily entry into the pit area. Grab the pit prop while leaning into the pit area and lift the prop to its fully upright position. Then lock it in place using the latch.

Step 7
Install counterweight carriage

NOTE: If you have the **counterweight safety option**, the safety assembly comes pre-installed to the top of the counterweight carriage as shown below. If the safety blocks are pre-assembled, you will need to remove them to install the counterweight carriage and then reinstall them later when you have tension on the ropes (refer to Step 34 later in this manual).

Figure 17
Counterweight safety option



1 Hoist up the counterweight carriage ensuring it is not upside down. The notches in the side rails of the carriage MUST be at the top to allow for installation of the counterweights.
2 Install the counterweight carriage by lowering it down between the T-rails. Use the 2 guide shoes on each side of the carriage to guide it onto the rails.
3 Tighten the 2 nuts for each guide shoe (on the inside of the counterweight carriage).

Figure 18
Counterweight carriage installed

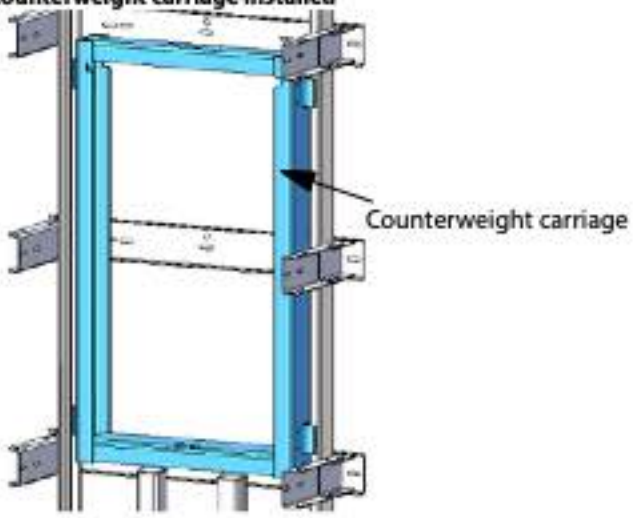

Figure 19
Guide shoes on counterweight carriage

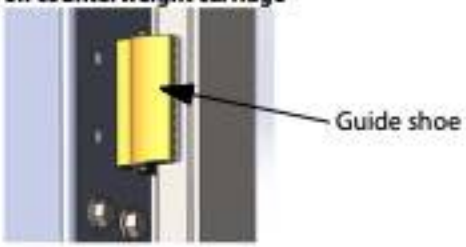

Step 8
Assemble upper back rail section(s)

NOTE

The number of additional rail sections is dependent on the total travel. Repeat this procedure for each section.

1 Ensure the shipped rail heights match the plan drawings.
2 Ensure the male end of BOTH T-rails is oriented UP.
3 Assemble the following components using the hardware from the kit below (where XX is the rail length).
   - Secure the rail wall brackets to the T-rails (4 bolts per side with flat washer, lock washer and nut). Note that the number of rail wall brackets depends on the rail height.
   - Attach a fish plate (101652) to the bottom end of each T-rail (4 bolts per side with corresponding washers and nuts).

470500-XX-HW, Rail Assembly Hardware Kit	
1/2-13X1.5 HEX HEAD BOLT	102200
1/2" FLAT WASHER	102189
1/2"-13 NUT	101106
1/2" SPRING WASHER	102193

NOTE

- Ensure the DIAMOND CUTOUT is at the top of the rail wall brackets when assembling.
- Ensure all rail wall bracket bolts are facing towards the BOTTOM of the rails when assembling.
- Ensure the fish plate bolts are facing out.

Figure 20
Secure rail wall brackets to rails



Figure 21
Secure rail fish plates to rails



Figure 22
Second back rail section assembled

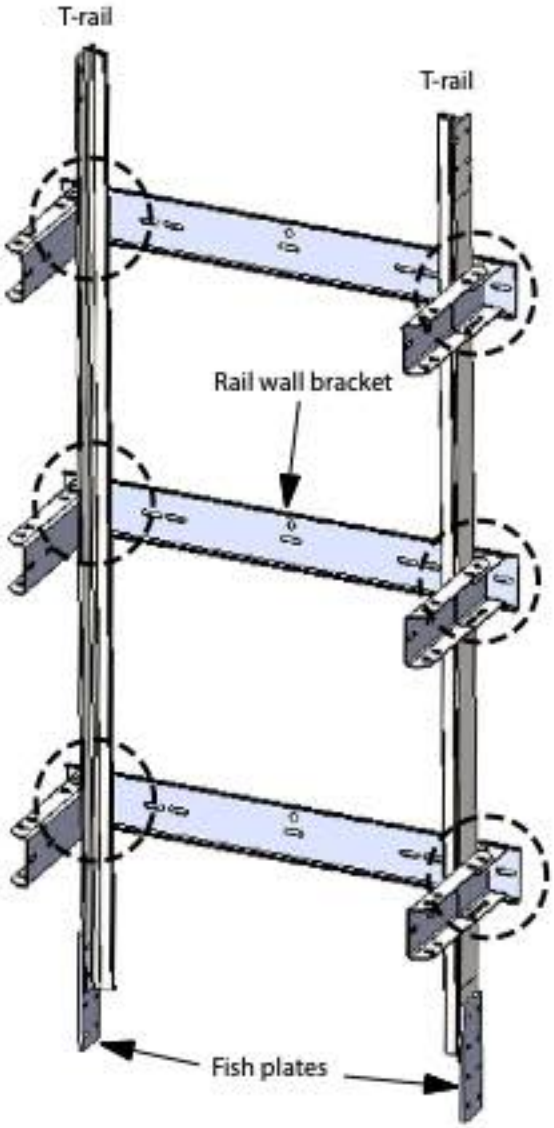

Step 9
Install upper back rail section(s)

NOTE

The number of additional rail sections is dependent on the total travel. Repeat this procedure for each section. Ensure the lower rails are plumb and level before adding the next rail section.

⚠ WARNING

Follow all safety precautions when assembling the rails. Use the proper equipment as needed (e.g. scaffolding, ladders, winch, etc.). Be very careful when working at heights and always wear a safety harness.

1 Before installing the upper back rail section, ensure there are temporary anchors in the lower back rail section (in the center slot of each rail wall bracket).

2 Hoist up the next back rail section so it mates with the lower back rail section (match female to male rail ends).

3 Secure the fish plates (101652) to the lower rail section at both sides using 4 bolts and corresponding hardware for each plate from the kit below.

470500-XX-HW, Rail Assembly Hardware Kit	
1/2-13X1.5 HEX HEAD BOLT	102200
1/2" FLAT WASHER	102189
1/2"-13 NUT	101106
1/2" SPRING WASHER	102193

4 Use a level to check for plumb at each rail joint and adjust as needed.

Figure 23
Secure back rail sections together with fish plates



Figure 24
Back rail sections connected together

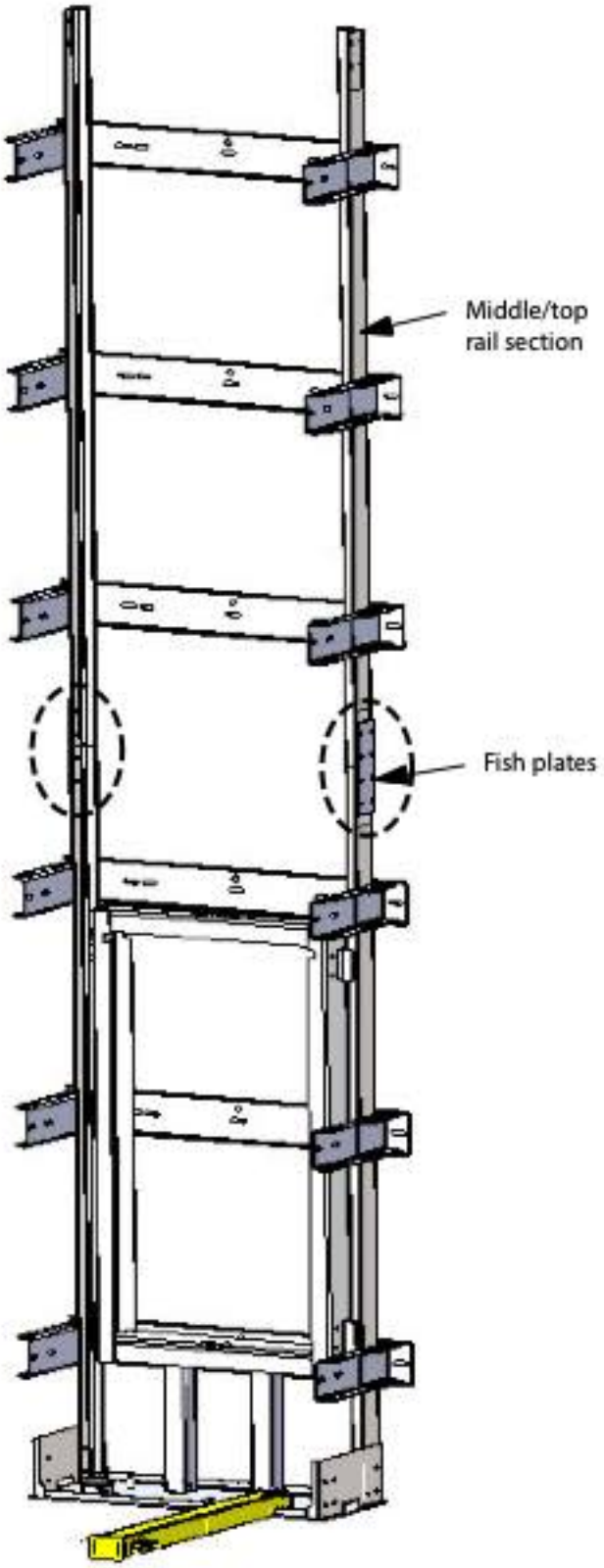

Step 10

Temporarily anchor upper back rail section(s)

1 Position the upper back rail section so the rail wall brackets are centered on the plumb line.

Figure 25
Rail wall brackets on centerline

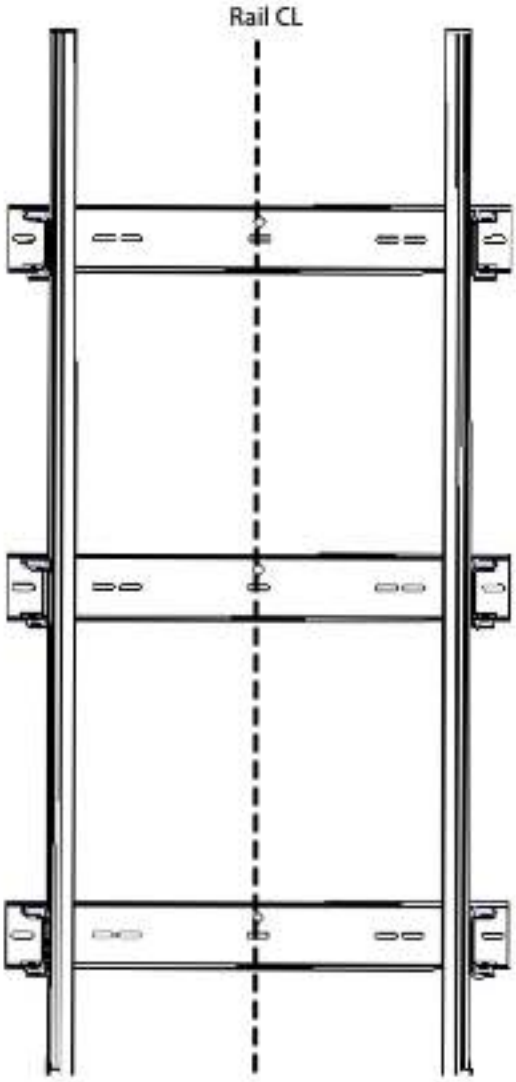

2 Temporarily anchor the rail section through the middle hole of the TOP and BOTTOM rail brackets. Use appropriate hardware for lagging to either a wooden wall or a concrete wall.

IMPORTANT

Note that the anchors provided by Savaria are standard/typical anchors and are not suitable for all site conditions. Always make sure the anchors used are proper for the type of wall on site.

Figure 26
Temporary anchor positions (upper rail section)

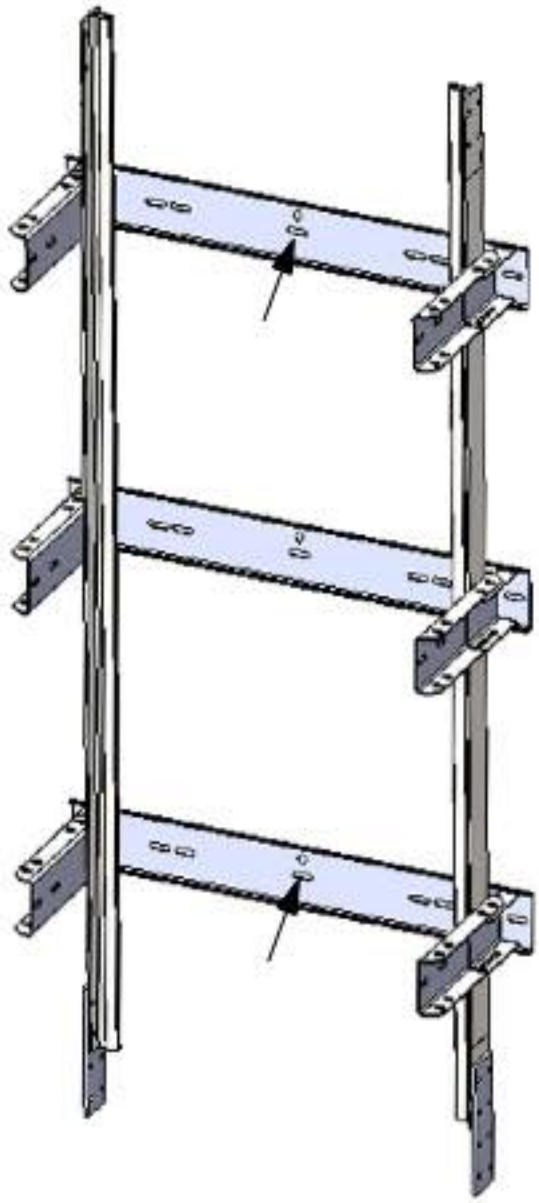

Step 11
Install lower front rails

1 Ensure the back rail sections are level and plumb before installing the front rails.
2 Ensure the shipped rail heights match the plan drawings.
3 Ensure the male end of BOTH T-rails is oriented UP.
4 Use the center-to-center tool to set the distance from the inside face of the back rail to the inside face of the front rail (dimension DBG Z shown on the next page).
5 Secure the lower front T-rails to the pit plate using 4 bolts per side with corresponding hardware from the kit below. Keep hardware loose.
   - **NOTE:** The bolt heads MUST be on the inside.

470300-HW, Pit Plate Hardware Kit	
RAIL CLIP M3	105371
1/2-13X1.5 HEX HEAD BOLT	102200
1/2" FLAT WASHER	102189
1/2"-13 NUT	101106
1/2" SPRING WASHER	102193

Figure 27
Secure lower front T-rails to pit plate



6 Secure the lower front T-rails to the side rail brackets with rail clips (105371) on the inside of the rail using 2 bolts at each rail bracket with corresponding hardware from the kit below. Keep the hardware loose.

470500-XX-HW, Rail Assembly Hardware Kit	
RAIL CLIP M3	105371
1/2-13X1.5 HEX HEAD BOLT	102200
1/2" FLAT WASHER	102189
1/2"-13 NUT	101106
1/2" SPRING WASHER	102193

Figure 28
Secure lower front T-rails to side rail brackets (outside view)



- **IMPORTANT:** Ensure the rail clip is oriented so the cutout on the back of the clip is on the rail as shown below.

Figure 29
Secure lower front T-rails to side rail brackets (inside view)



Figure 30
Lower front T-rails installed

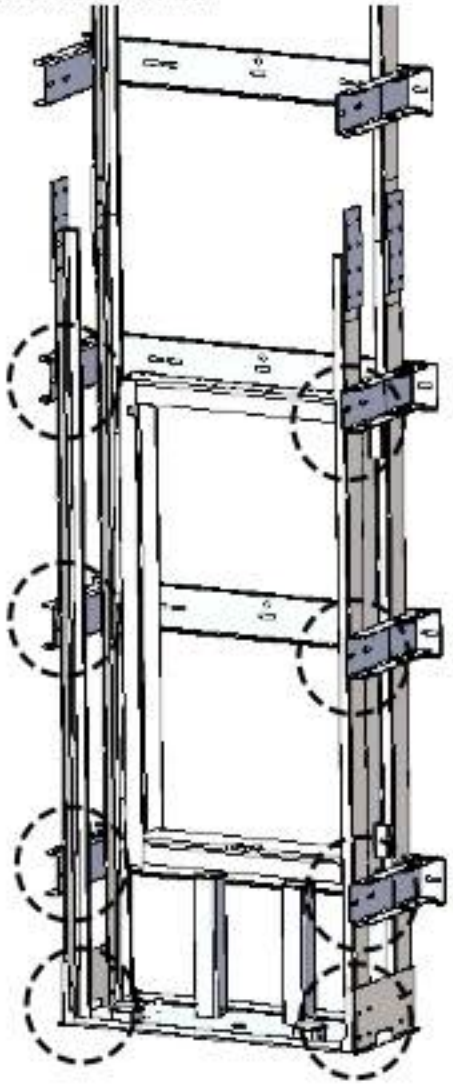

Step 12
Install upper front rails

NOTE

The number of additional front rails is dependent on the total travel. Repeat this procedure for all front rails. Ensure the lower front T-rails are plumb and level before adding the upper front T-rails.

⚠ WARNING

Follow all safety precautions when assembling the rails. Use the proper equipment as needed (e.g. scaffolding, ladders, winch, etc.). Be very careful when working at heights and always wear a safety harness.

1 Ensure the shipped rail heights match the plan drawings.

2 Ensure the male end of BOTH T-rails is oriented UP.

3 Attach a fish plate (101652) to the bottom end of each upper front T-rail (4 bolts per side with flat washer, lock washer and nut). Ensure the bolts are facing out.

4 Lift up the upper front T-rails to mate with the lower front T-rails (match female rail ends to male rail ends).

5 Secure the fish plates (101652) to the lower front T-rails at both sides using 4 bolts and corresponding hardware for each plate from the kit below. Ensure the bolts are facing out.

470500-XX-HW, Rail Assembly Hardware Kit	
RAIL CLIP M3	105371
1/2-13X1.5 HEX HEAD BOLT	102200
1/2" FLAT WASHER	102189
1/2"-13 NUT	101106
1/2" SPRING WASHER	102193

6 Secure the upper front T-rails to the side rail brackets with rail clips (105371) on the inside of the rail using 2 bolts at each rail bracket with corresponding hardware from the kit above.

- **IMPORTANT:** Ensure the rail clip is oriented so the cutout on the back of the clip is on the rail as shown below.

7 See the illustration on the previous page and ensure the proper DBG dimensions for X and Y as follows:

a. Set the distance front to back (Y) and the distance between T-rails (X) at the bottom rail bracket. Tighten the hardware.

b. Set the distance front to back (Y) and the distance between T-rails (X) at the top rail bracket. Tighten the hardware.

8 Check for plumb at each rail joint and adjust as needed.

Figure 31
Secure front T-rails together with fish plates



Figure 32
Upper front T-rails installed

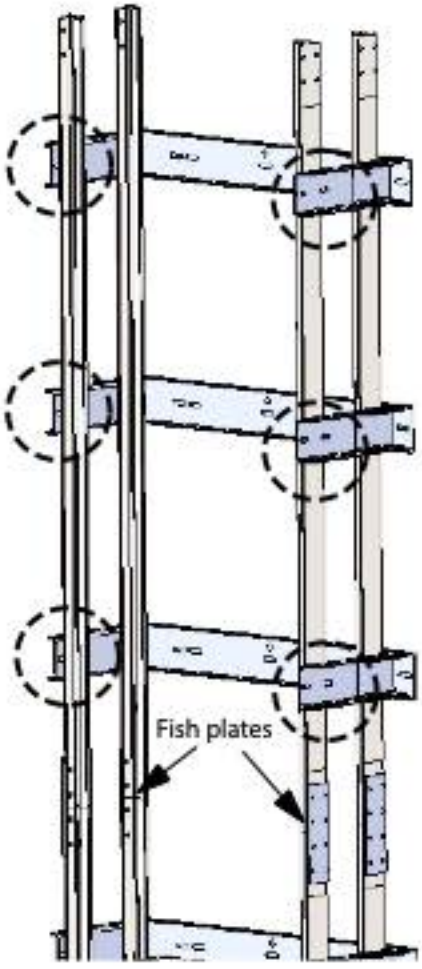

Figure 33
Completed rail assembly

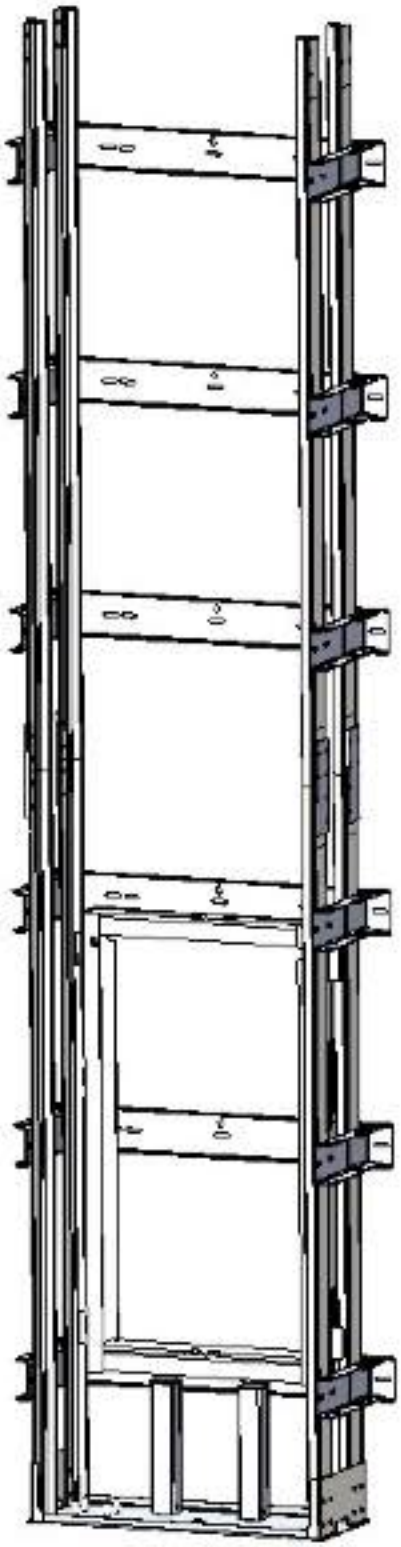

Step 13
Install motor raft

1 Hoist the motor raft up to the top of the rails.
2 Put the raft in position ensuring the recess is at the front.
3 Drill out a minimum of 1 hole per rail and bolt the raft to the T-rails at each corner using hardware from the kit below.

470430-HW, Motor Raft Hardware Kit	
1/2-13X1.5 HEX HEAD BOLT	102200
1/2" FLAT WASHER	102189
1/2"-13 NUT	101106
1/2" SPRING WASHER	102193

4 Shim as required to keep the rails plumb.

Figure 34
Install motor raft

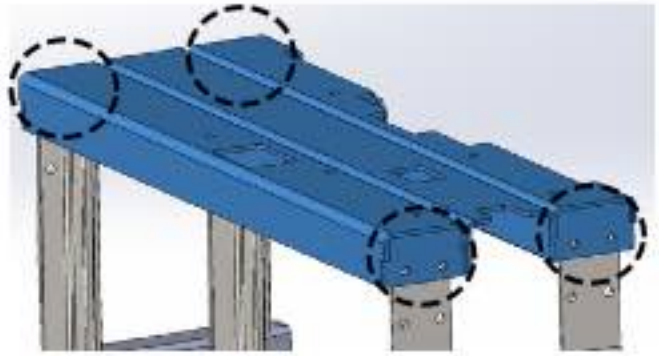



Step 14
Permanently anchor rail sections to wall

1 At each rail wall bracket, drill **at least 4 holes minimum** (BOTH outside holes and any 2 inside holes).
2 Anchor through the holes just drilled. Use appropriate hardware for lagging to either a wooden wall or a concrete wall.

IMPORTANT

Note that the anchors provided by Savaria are standard/ typical anchors and are not suitable for all site conditions. Always make sure the anchors used are proper for the type of wall on site.

Step 15
Set DBG dimensions for X, Y and Z

See the illustration below and ensure the proper DBG dimensions for X, Y and Z as follows:

1 Set the distance front to back (Y or Z) and the distance between T-rails (X) at the bottom rail wall bracket. Tighten the hardware.
2 Set the distance front to back (Y or Z) and the distance between T-rails (X) at the top rail wall bracket. Tighten the hardware.

NOTE

DBG X for the front rails/ sling rails is the most **critical** dimension.
Use the measuring tools shown in Figure 10 on page 11 to confirm accuracy.

Figure 35
Rail DBG (top view)

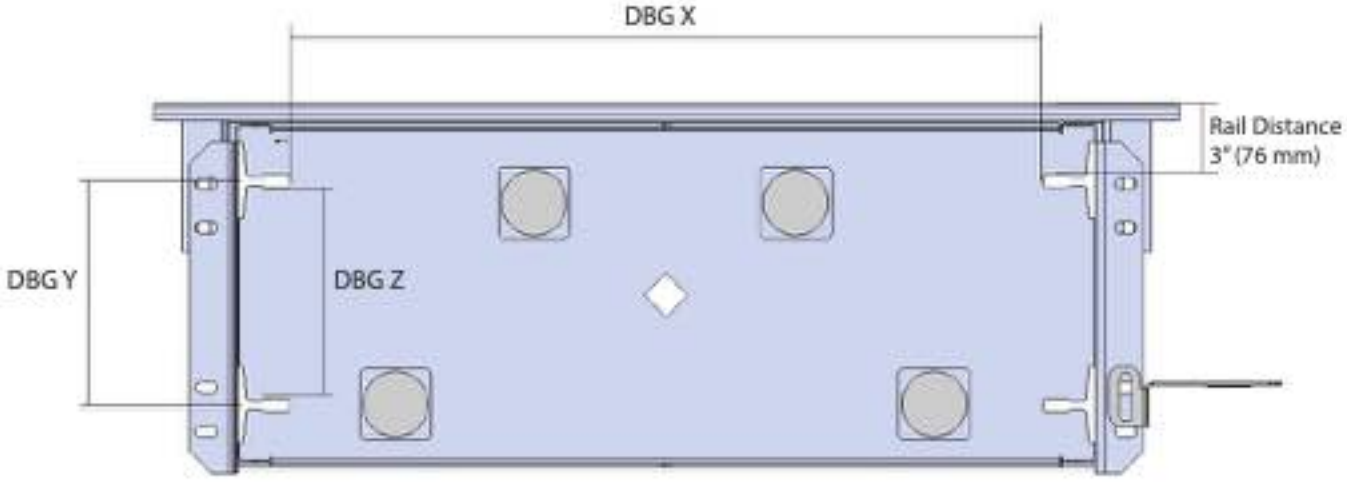

Guide Rail DBG
X = 34.5" (876.3 mm)
Y = 10.25" (260.35 mm)
Z = 9.62" (244.35 mm)

NOTES
X is T-rail to T-rail.
Y is center of rail to center of rail.
Z is inside face of rail to inside face of rail.
Rail Distance is rail wall to inside face of rail.

NOTE

Ensure sling rails are lined up face to face by placing 4 foot level across rail surface. Adjust so that level sits flat on both the rails.

Step 16
Install motor and sheave assembly

⚠ WARNING

The motor assembly is very heavy! Follow all safety precautions when hoisting the motor assembly.

1 Remove the balance weights from the overspeed tensioner assembly and install them on the motor sheave cover as shown in Figure 36.
   - Note that the balance weights will ensure the proper center of gravity for lifting.
2 Secure the weights in place at one corner using a 1/2-13X2.5" bolt and corresponding hardware.

Figure 36
Balance weights

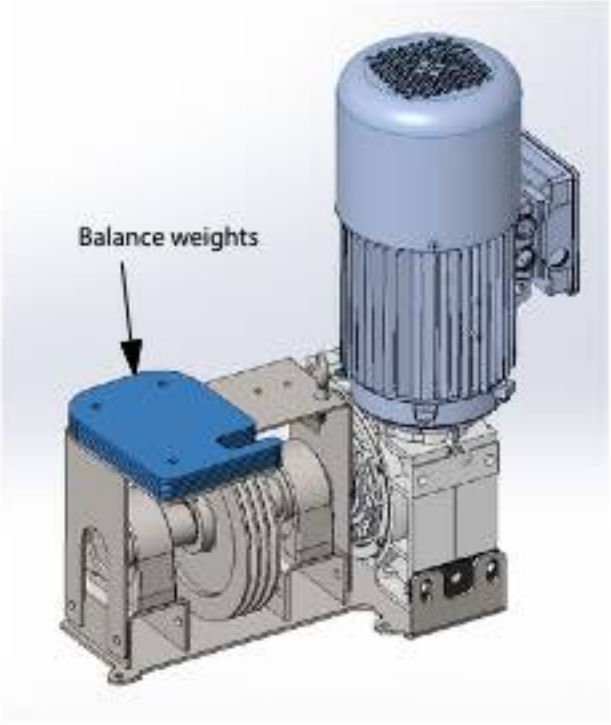

3 Attach your hoisting chain/winch from the lifting beam to the lifting eye bolt on top of the motor sheave cover.

Figure 37
Lifting eye bolt on motor sheave cover

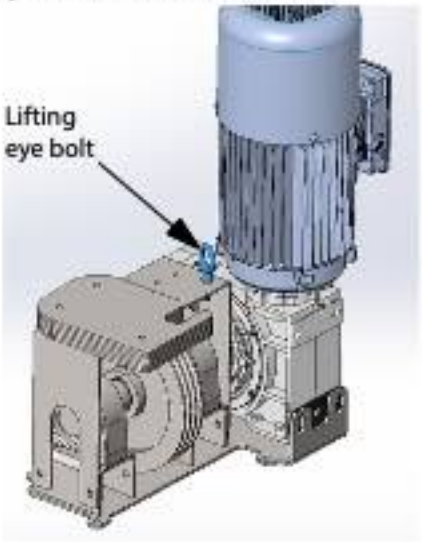

4 Carefully hoist the motor and sheave assembly to the top of the rails.
5 Position the motor plate on the motor raft using the angle guide. The motor will sit on a 15-degree angle to square.

Figure 38
Hoisting motor assembly



6 Secure the motor assembly to the motor raft using 4 bolts and corresponding hardware from the kit below.

470426-HW, Motor Assembly Hardware Kit	
1/2-13X1.5 HEX HEAD BOLT	102200
1/2" FLAT WASHER	102189
1/2"-13 NUT	101106
1/2" SPRING WASHER	102193

NOTE

Leave the balance weights on the motor sheave cover until you install the overspeed tensioner assembly in a later step.

Figure 39
Install motor assembly

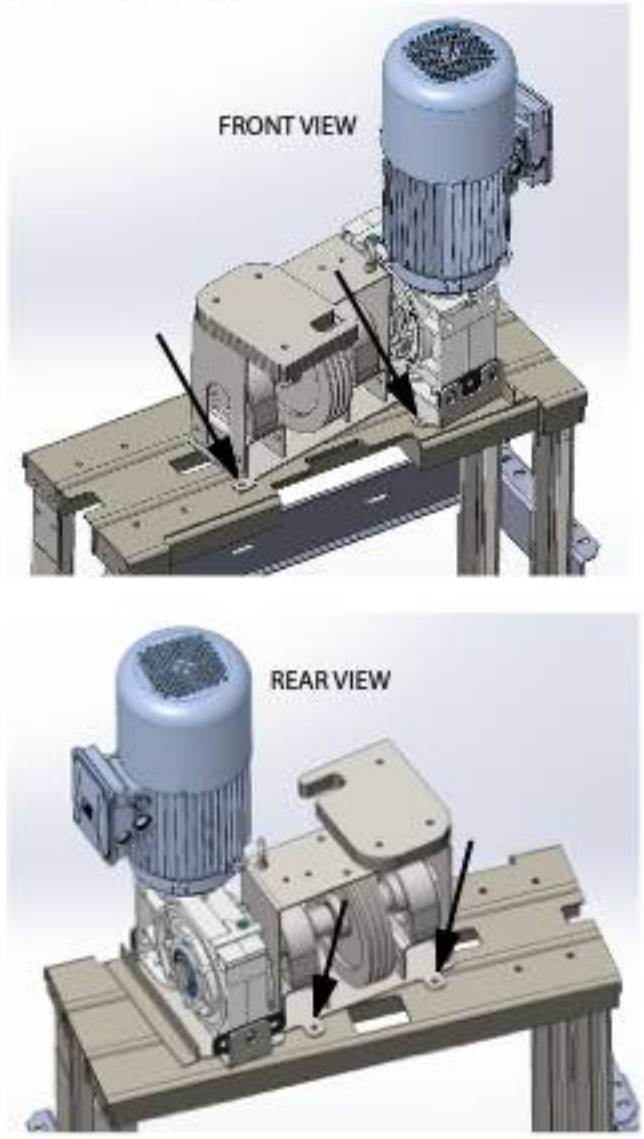

7 Ensure the motor brake air gap adheres to the following table.

The air gap (60), that is the distance between the two magnetic cores, the brake coil (25) and brake moving element (24), must stay within **0.3-0.7mm / 0.0118-0.0275in**. It is not advisable to exceed the expressed value, in order to avoid vibrations of the brake moving element, very loud noise, the brake coil burning or even the whole brake assembly failure. It is advisable to check periodically the air gap because it increases as a consequence of the brake disc wear. In order to set the air gap to the indicated value, loosen the nuts (21-22) so to move the brake coil (25) towards the brake moving element (24). Once this operation has been settled be sure to tighten the locknuts. Use feeler gauges to measure the air gap.	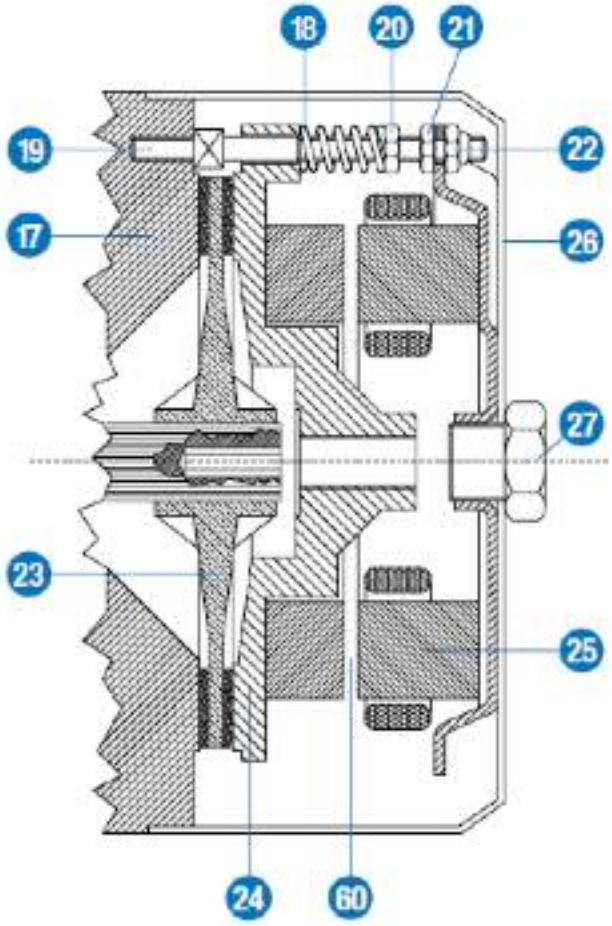

8 To check the air gap:
   a. Remove the top fan cover.
   b. Peel up the outer rubber gasket and then peel down the O-ring.
   c. Insert the feeler gauge as shown in Figure 40 to check the air gap.

Figure 40
Checking air gap



Step 17
Install sling

The sling consists of the following parts:

- Sling uprights, L-shaped (x2)
- Guide roller assemblies (x4, 2 per side) - preinstalled on sling uprights
- Safety blocks (x2) - preinstalled on sling uprights
- Sling extension assembly
- Top brace (x1)
- Bottom braces (x2)
- Cross braces (x2)
- Lifting bracket assembly

NOTE

The counterweight carriage is not shown in the following drawings for clarity of illustration.

1 Check the brake mechanism safety block assemblies installed on each sling upright. Note that there is a left and right safety block. Ensure they are installed on their proper sides so that when the sling lowers, the knurled wheel is driven up into the wedge. For the bi-directional, when the sling moves up, the knurled wheel is driven down into the wedge.

Figure 41
Safety blocks (right hand shown)

Older version

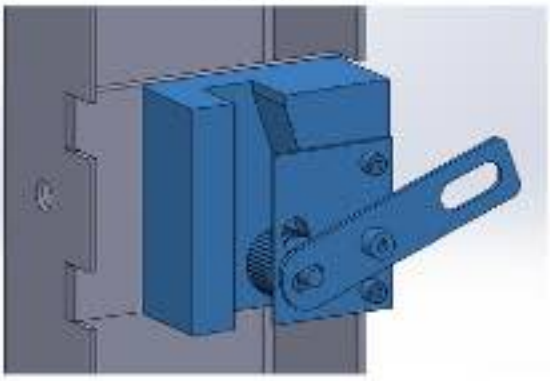

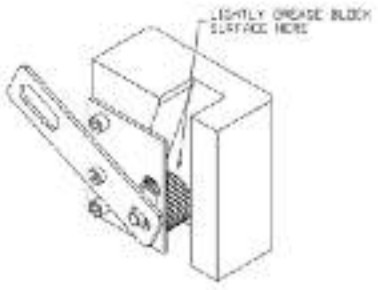

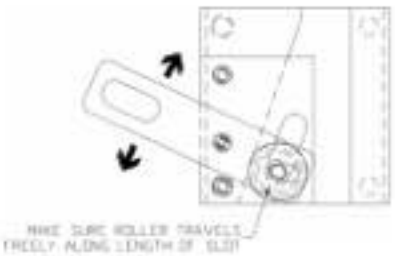

New Bi-directional version

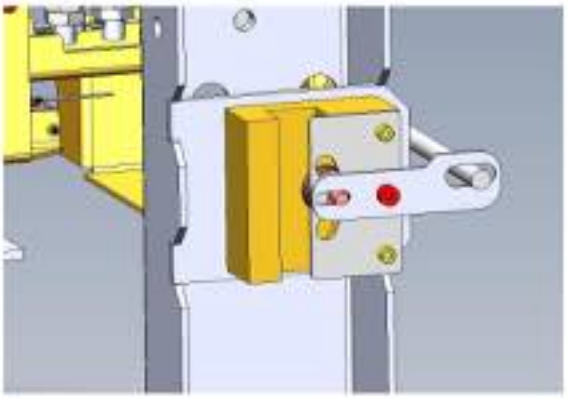

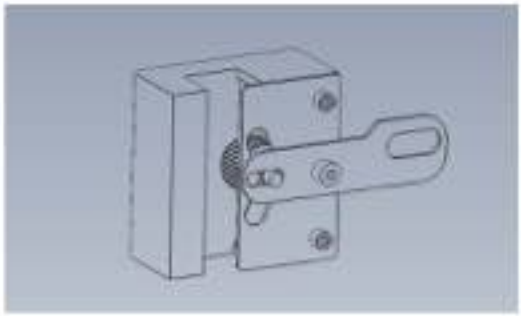

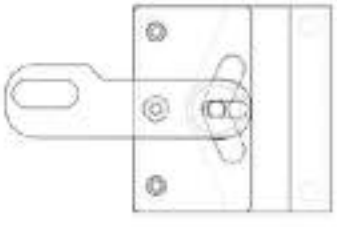

2 Ensure the knurled roller travels freely along the length of the wedge.
   - NOTE: Install 1 sling upright first, followed by the sling extension assembly, and then the 2nd sling upright. See Figure 54 showing the parts in place.

3 Mount the first L-shaped sling upright on the T-rail, ensuring the rail is in between the guide rollers as shown in Figures 55 and 56. Also ensure the rail is in the cutout of the safety block.

Figure 42:First sling upright on rail

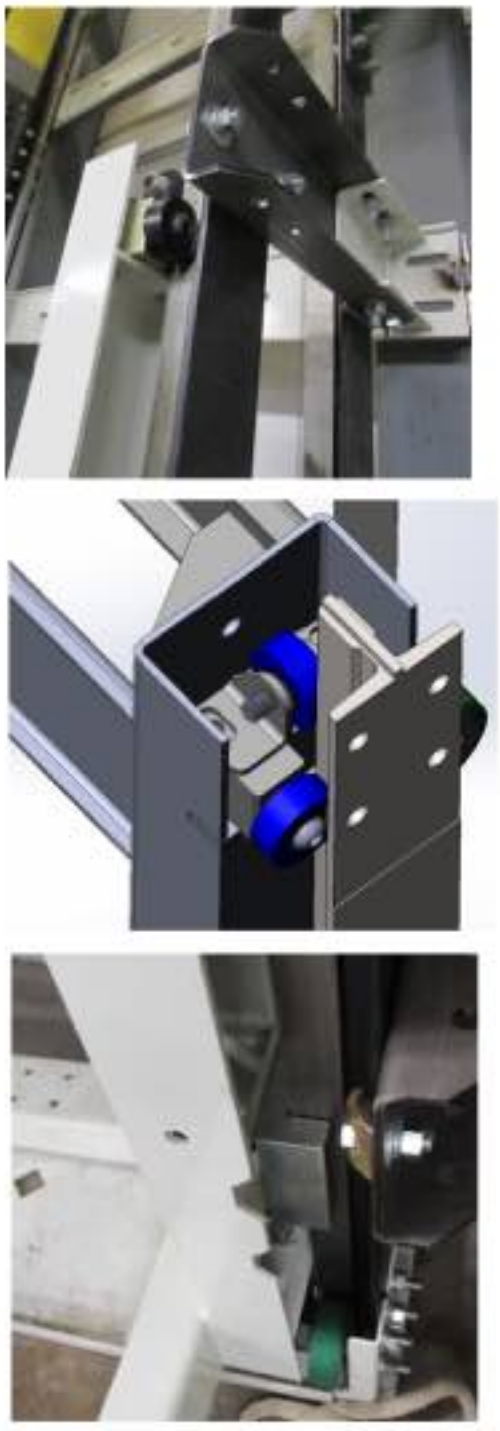

4 Note that you may need to adjust the safety blocks to fit on the rail through the 4 holes in the sling uprights.

470100-HW, Sling Hardware Kit	
1/2-13X1.5 HEX HEAD BOLT	102200
1/2" FLAT WASHER	102189
1/2"-13 NUT	101106
1/2" SPRING WASHER	102193

5 Mount the second sling upright in place, ensuring the T-rail is in between the guide rollers of the upright.Also ensure the rail is in the cutout of the safety block.

6 Assemble the sling upright to the other side of the extension assembly and secure in place using 2 bolts and corresponding hardware from the kit above.

Figure 43: Sling uprights and extension assembly

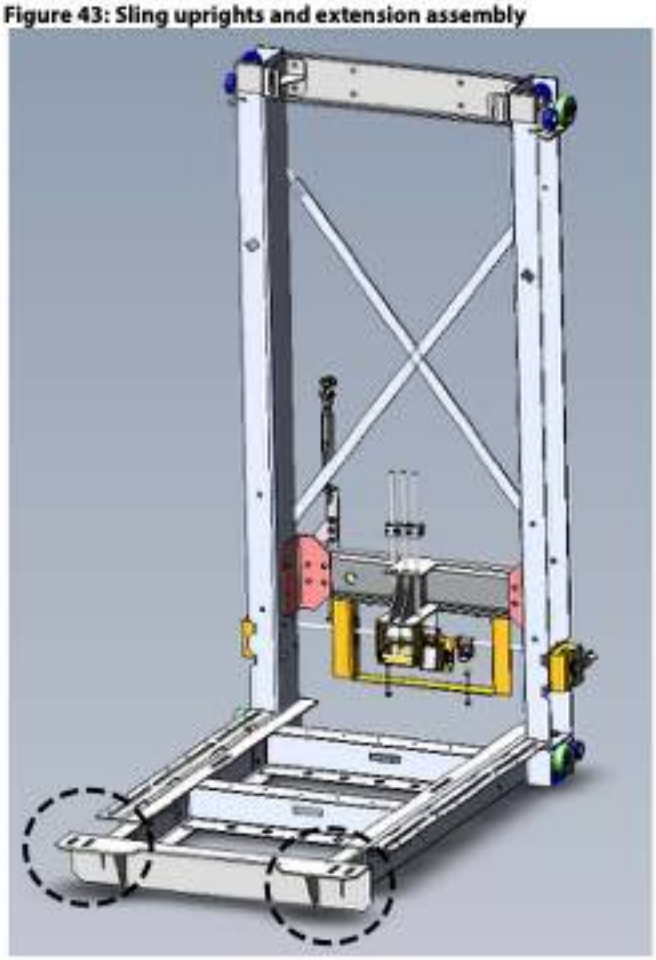

7 Attach the sling top brace to the sling corner brackets using 2 bolts and corresponding hardware at each side from the kit below.
   - Adjust the top guide rollers as needed so the brace fits properly.

Figure 44:

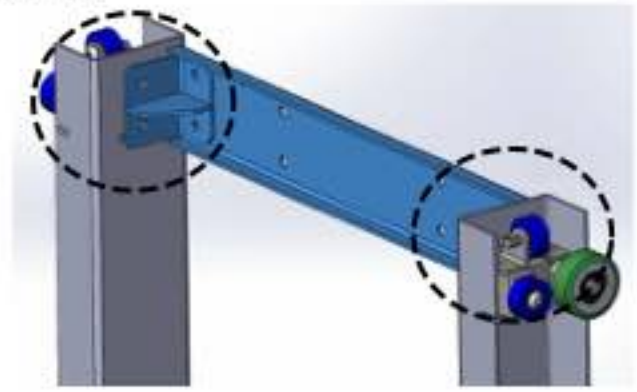



8 Attach the two sling bottom braces (torsion bars) to the sling using 2 bolts and corresponding hardware at each side for each brace from the kit below.

470100-HW, Sling Hardware Kit	
1/2-13X1.5 HEX HEAD BOLT	102200
1/2" FLAT WASHER	102189
1/2"-13 NUT	101106
1/2" SPRING WASHER	102193

Figure 45:

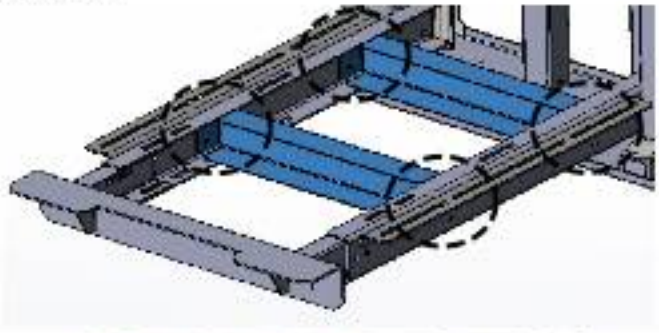



9 Position the lifting bracket assembly so that the hollow rod extends through each safety block actuating ever. Refer to Figure 62 and 68.

Figure 46: Rod through safety liver (top view)



10 Secure the lifting bracket assembly to the sling upright bracket at each side using 4 carriage bolts and corresponding hardware per side from the kit below.

470100-HW, Sling Hardware Kit	
1/2" x 1.5 CARRIAGE BOLT	
1/2" FLAT WASHER	102189
1/2"-13 NUT	101106
1/2" SPRING WASHER	102193

Figure 47:



Figure 48: Lifting bracket assembly (Rear view)

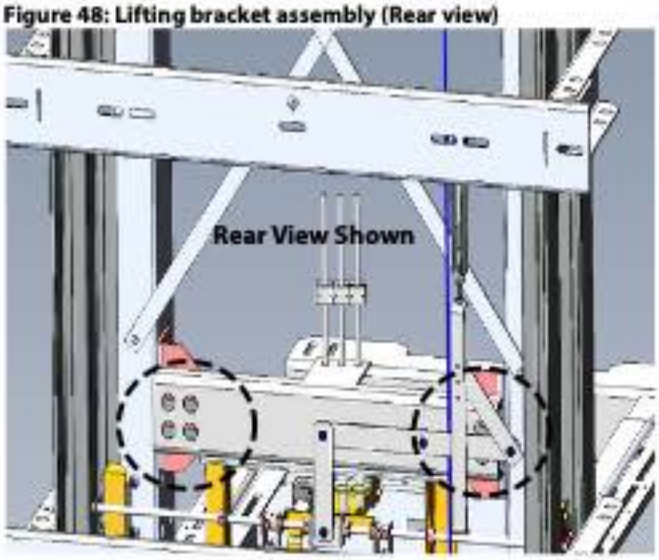

11 Attach the 2 cross braces 470115 (forming an X) to the back of the sling uprights using 1 tab (470114) and corresponding hardware at the top, and 1 bolt and corresponding hardware at the bottom for each brace. Use hardware from the kit below to assemble.

- **NOTE:** Adjust as necessary to ensure the sling is square. Snug the hardware but do not over-tighten.

470100-HW, Sling Hardware Kit	
1/2-13X3/4 HEX HEAD BOLT	107463
1/2" FLAT WASHER	102189
1/2"-13 NUT	101106
1/2" SPRING WASHER	102193
3/8-16 FLANGE NUT	105283
NUT_HEX 3/8-16 NYLOK	102764
FLAT SOCKET CAP SCREW 3/8"-16X1.25"	107716

Figure 49:

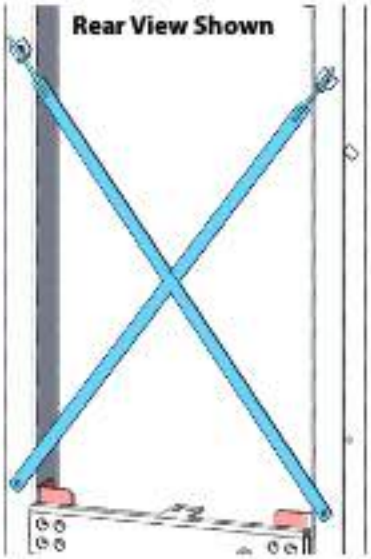

Figure 50:



12 Adjust the safety blocks as needed (through the 4 holes in the sling uprights) so the rail is centered in the cutout of the safety block.

Figure 51:

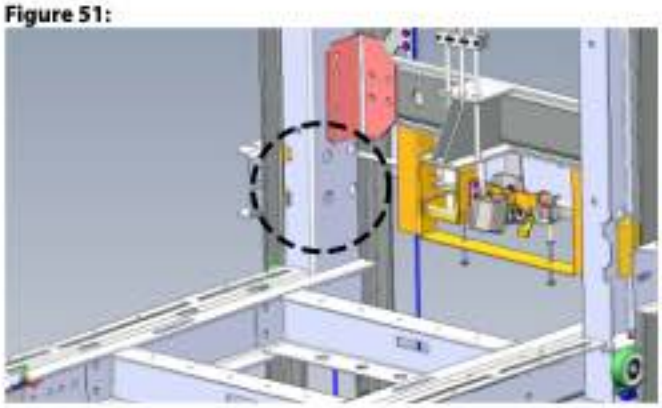

13 See the complete assembly in Figure 52.

- Note that we've not shown the sling assembly installed on the rails so that you can have a better look at the components.

Figure 52:

Step 18
Install elevator cables

IMPORTANT: Starting Position for Roping

1 Set the counterweight carriage on the counterweight buffers (see Figure 52).
2 Install platform on sling.
3 Hoist the sling up to the upper landing and set per the 3" to 6"(depending on the overhead and pit dimensions) CAB FFL to upper landing FFL (see Figure 52).

IMPORTANT
When equalizing the ropes, ensure that the 3 ropes are tensioned to within 10% of each other.

Figure 53
Starting position for roping

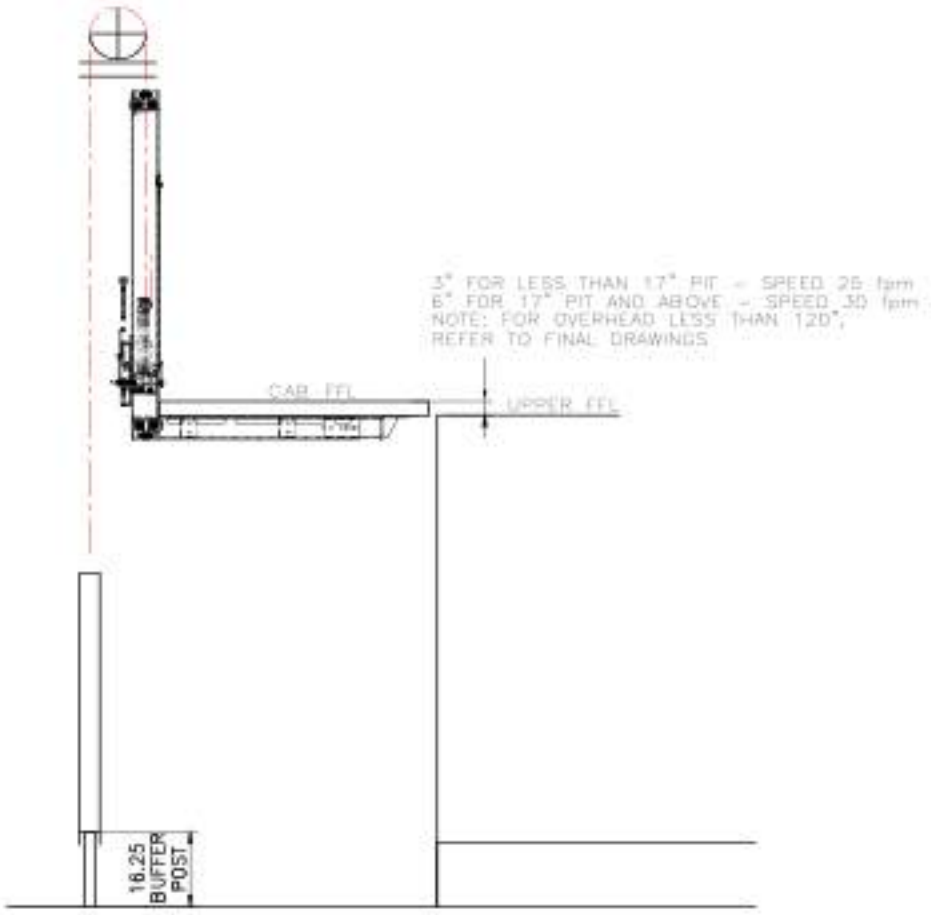

Figure 54

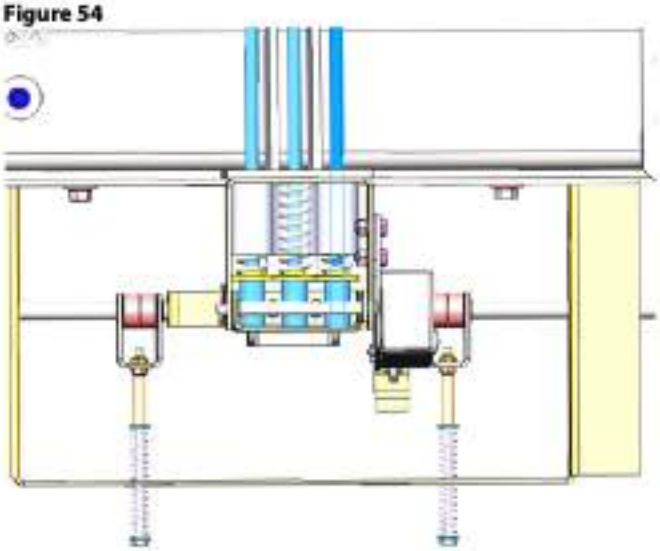

Figure 55:

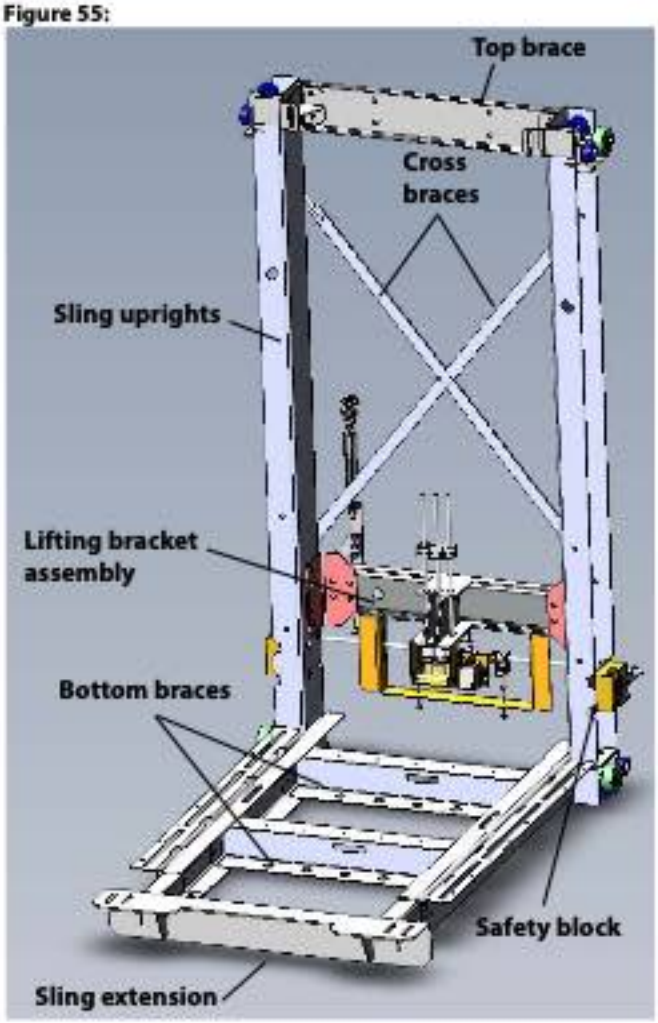

Step 19

Install Rope swage end of sling

1 Insert the washer, followed by the spring, all the way down to the crimped wedge. Followed by inserting the cable.

2 Repeat step 2 for the remaining two ropes. Ensure the spring is loose fit, and the washer sits properly on the crimped wedge

Figure 56:

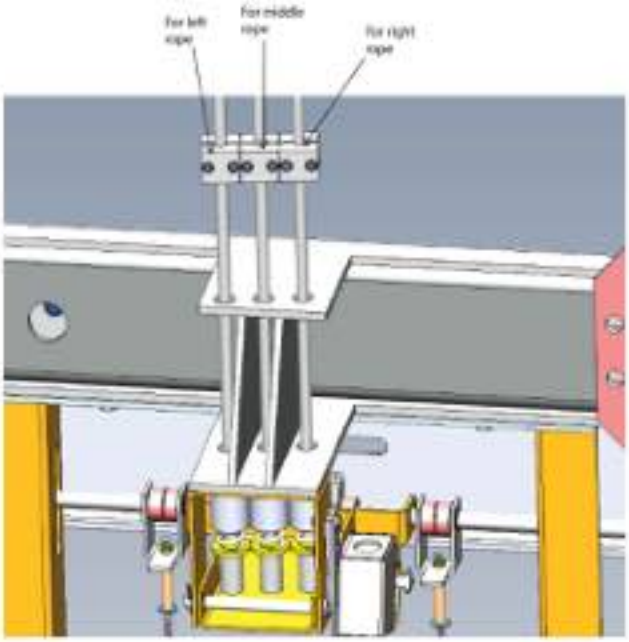

Figure 57

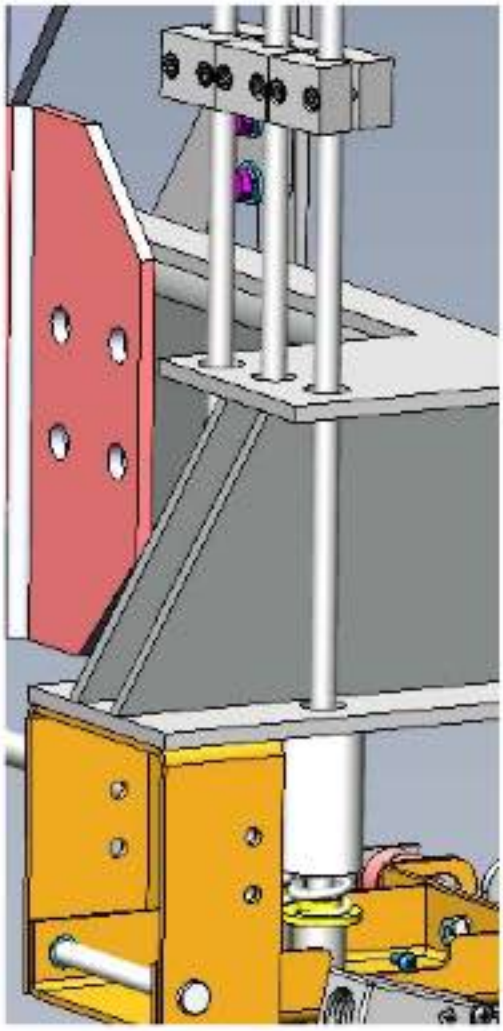

Figure 58

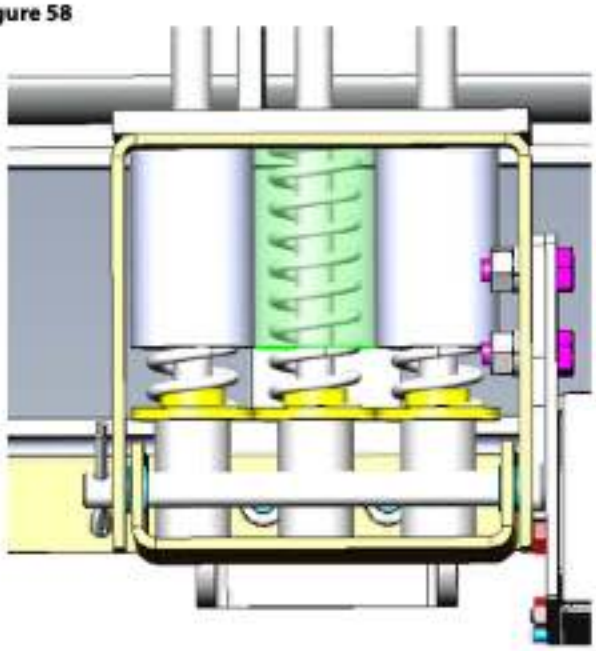

Figure 59:

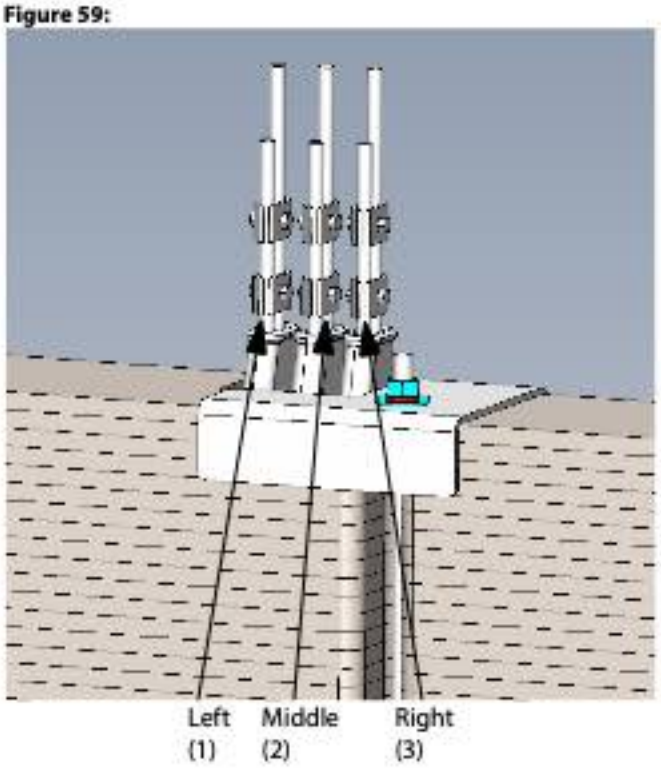

Figure 60:

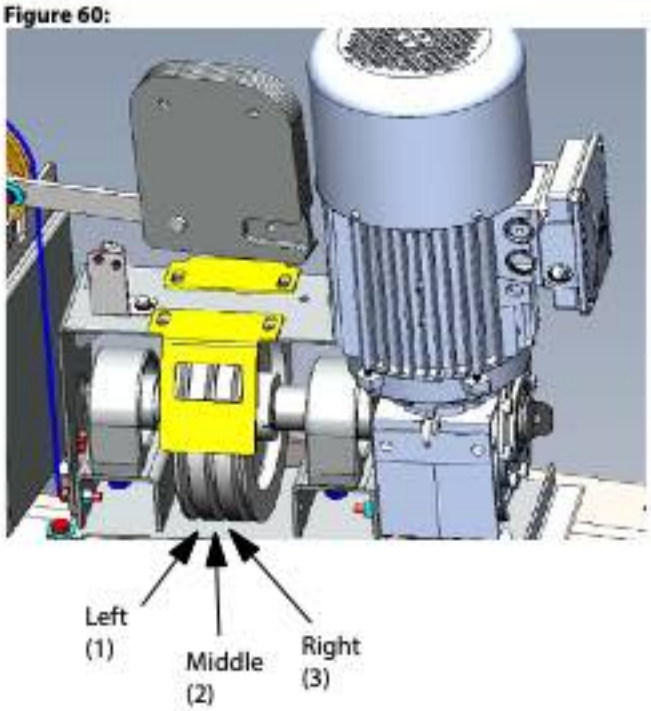

⚠ WARNING

Use the guide below to add counterweights to avoid loss of traction during installation.

Figure 61:

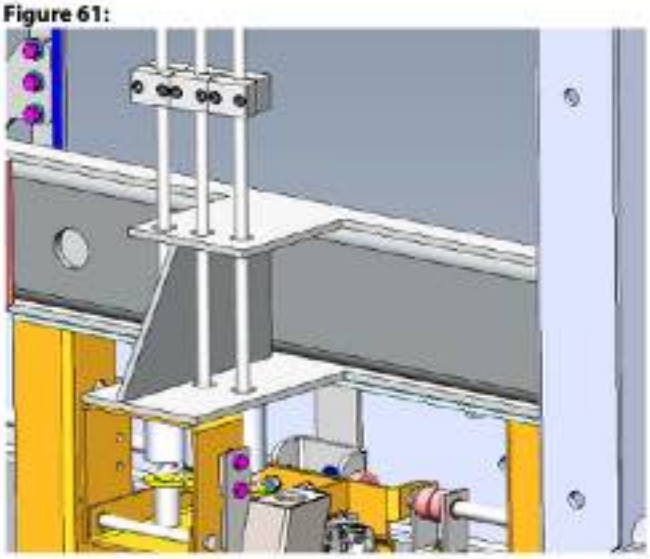

NOTE

Before subjecting the cables to any tension, make sure to move the nuts at the bottom of the wedge to the end of the threads on the rod. This is to ensure plenty of adjustment to equalize the cable tension when weight is applied. When adjusted, there must be 2 nuts locked together on the underside of each rod. Once ropes have been confirmed to have equal tension, make sure to torque together the double nuts on both the sling side and counterweight side prevent loosening.

Figure 62:

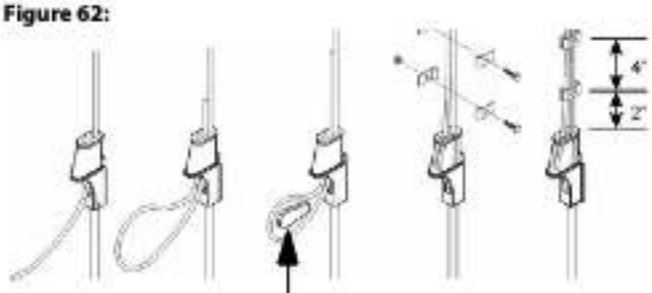

Heart-shaped piece



Step 20

Install counterweights

IMPORTANT

IMPORTANT SAFETY NOTICE!

ZENITH COUNTERWEIGHT LOADING

USE THE GUIDE BELOW TO ADD COUNTERWEIGHTS TO AVOID LOSS OF TRACTION DURING INSTALL

1 Install the counterweights into the counterweight carriage. There are slots cut out at each side in the top of the carriage to assist with installation of the counterweights. Below are the number of counterweights required for both the upper and lower portions of the counterweight carriage.

NOTE

Completely fill the upper counterweight carriage with the 1/2" counterweights before filling the lower counterweight carriage

UPPER COUNTERWEIGHT CARRIAGE	QUANTITY 0.5" FILLER WEIGHT
SLING & ROPES	18

NOTE

Below is the standard amount of 1" filler weights. Depending on the job, the amount of counterweights required will vary.

LOWER COUNTERWEIGHT CARRIAGE	QUANTITY 1.0" FILLER WEIGHT
CAB PLATFORM	2-3
CAB WALLS	2-4
ROOF & CEILING	2
DOORS & OPERATOR T1 CAB	2
DOORS & OPERATOR 21 CAB	2

NOTE

Below is the back view of the top counterweights (470907). This view cannot be seen during installation.

Figure 63

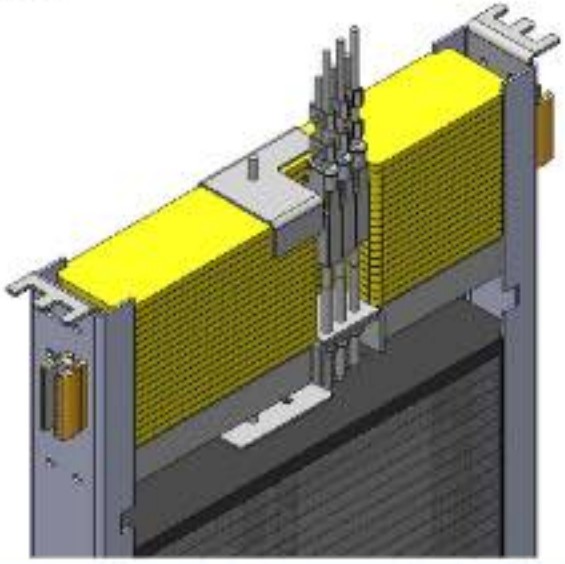

NOTE

Ensure double nuts and cotter pins are installed on shackle.

Figure 64
Install counterweights

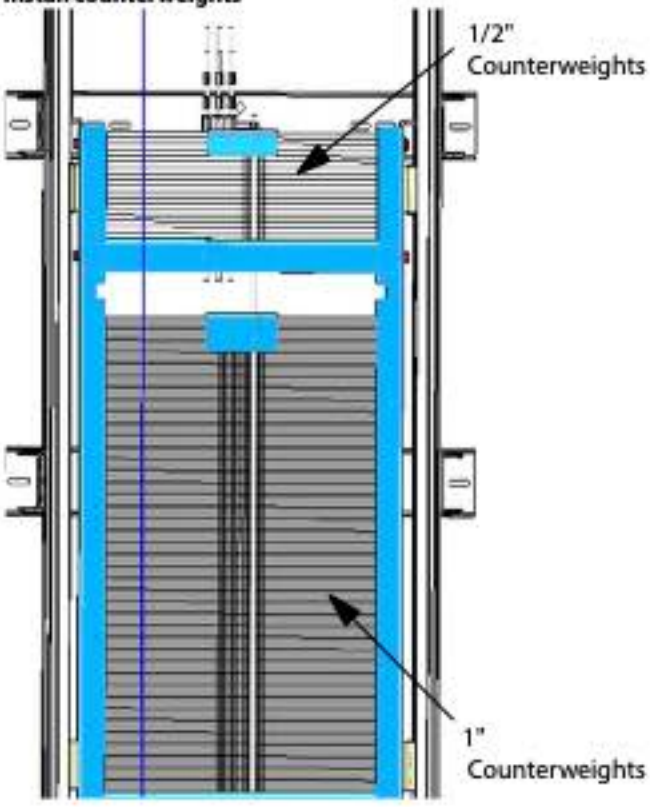

2 Attach the front and back cable guards to the motor sheave cover as shown below. Secure in place using 2 bolts and corresponding hardware per guard from the kit below.

470426-HW, Motor Assembly Hardware Kit	
1/2-13X1.5 HEX HEAD BOLT	102200
1/2" FLAT WASHER	102189
1/2"-13 NUT	101106
1/2" SPRING WASHER	102193

Figure 65: Install cable guard

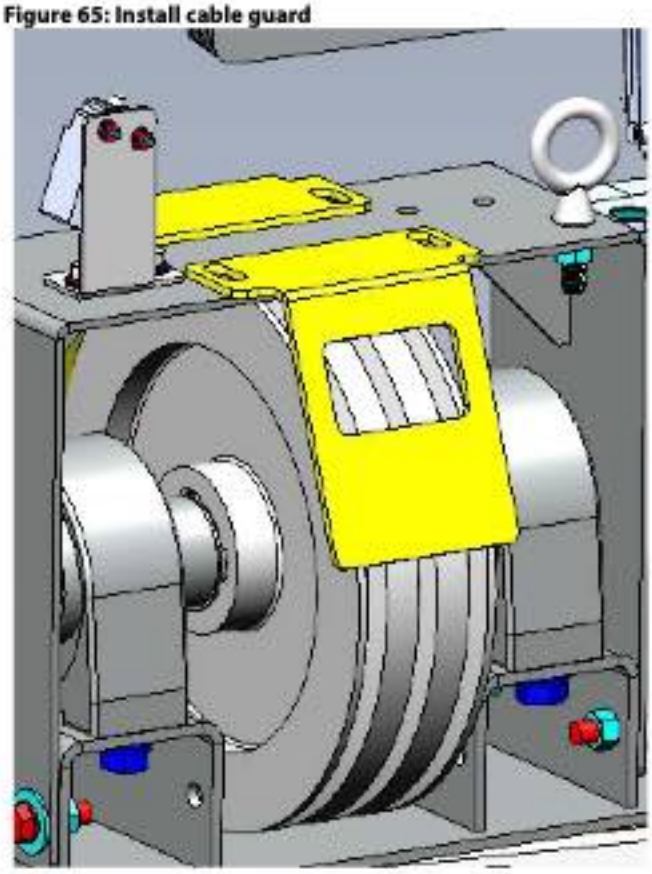

Step 21
Connect power supply and motor

⚠ WARNING

Local codes and regulations may require a licensed electrician to connect to the mains. Check with your local authority before beginning the installation.

NOTE

For complete wiring information, refer to the *Electrical Schematics*.

Mount the disconnects for the lighting and the main power near the controller box as per applicable local code.

NOTE: Check the rules and regulations in your area for proper placement of the hoistway disconnects.

1 Connect the wires from the 240V/208V main disconnect box to screw terminals L1 and L2 (for single-phase) or L1, L2 and L3 (for three-phase) as required per the *Electrical Schematics* shipped with the lift. Be sure to connect ground to the grounding strip "G".

2 Connect the wires from the 120V cab lighting disconnect box to the Hot and Neutral screw terminals in the controller box per the *Electrical Schematics* shipped with the lift. Connect ground to the grounding strip "G".

3 Run the motor cable down the hoistway and in through the controller cabinet access hole in the top of the cabinet. Connect the motor wires to the controller per the *Electrical Schematics* shipped with the lift.

⚠ WARNING

Make sure the building ground is connected to the controller ground bus before turning the disconnect on. Improper or no ground can result in shocking hazard and unsafe operation.

Step 22
Install Overspeed Governor

NOTE

If the overspeed governor (OSG) assembly is not preinstalled in the pit plate, you will need to install it

1 Attach the overspeed governor assembly to the pit plate at the bottom of the rails.

2 Secure in place using 4 lock washers and nuts from the kit below.

470300-HW, Pit Plate Hardware Kit	
3/8 SPRING WASHER	102191
3/8-16 NUT	102186

3 Note the OSG tripping switch assembly on top of the OSG mechanism.

Figure 66:

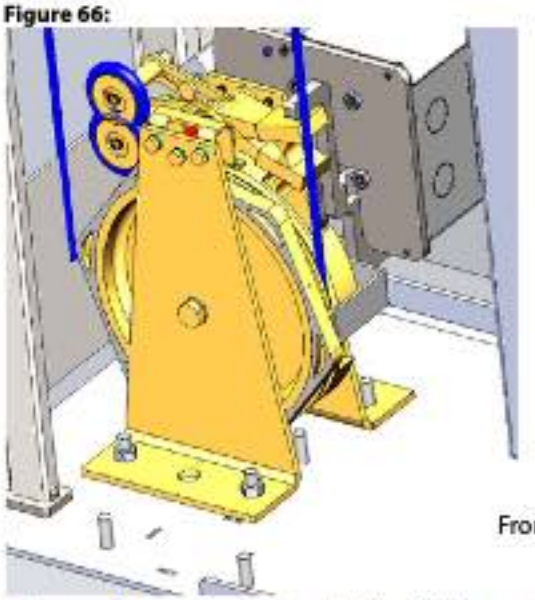

Front view

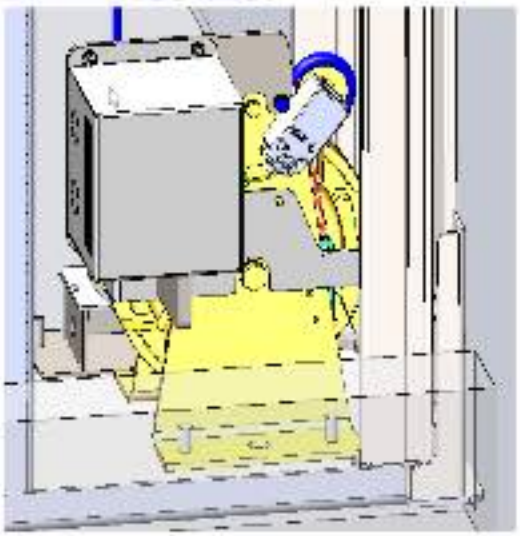

Step 23
Install overspeed tensioner assembly

1 Secure the overspeed pulley mounting bracket to the motor raft at the top of the rails using 2 bolts and corresponding hardware from the kit below.

470430-HW, Motor Raft Hardware Kit	
1/2-13X1.5 HEX HEAD BOLT	102200
1/2" FLAT WASHER	102189
1/2"-13 NUT	101106
1/2" SPRING WASHER	102193

2 Secure the overspeed pulley tensioner assembly to the mounting bracket using two 1.5" long bolts and corresponding hardware from the kit below.

470625-HW, OSG Assembly Hardware Kit	
1/2-13X1.5 HEX HEAD BOLT	102200
1/2" FLAT WASHER	102189
1/2"-13 NUT	101106
1/2" SPRING WASHER	102193
1/2-13X2.5" HEX HEAD BOLT	102974

- Note that the mounting holes are slotted to adjust the position of the overspeed tensioner as needed.

3 Transfer the balance weights from the motor sheave cover to the overspeed tensioner arm and secure in place using four 3.75" long bolts and corresponding hardware from the kit above.

Figure 67
Install overspeed tensioner assembly

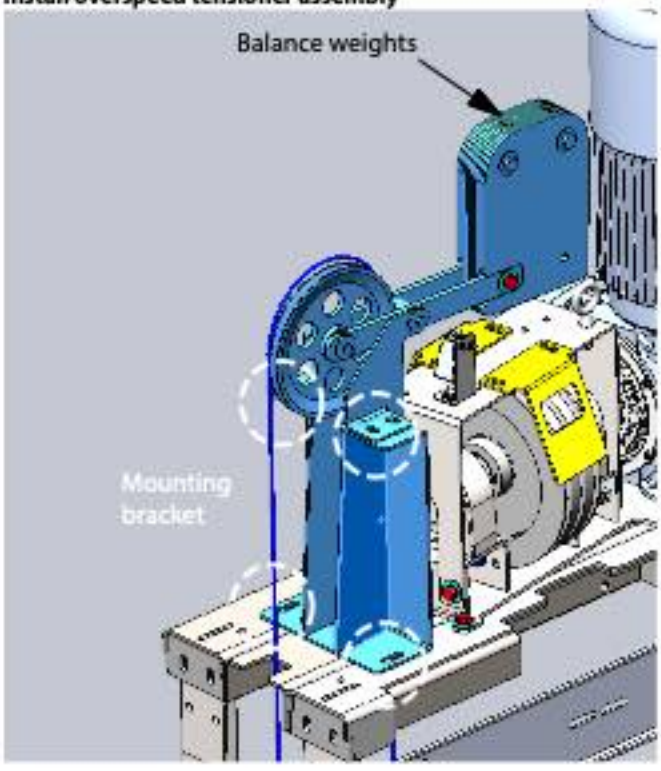

Step 24
Install overspeed governor (OSG) cable

1 Feed the OSG cable down through the hole in the BOTTOM of the lifting bracket rope coupling. Continue feeding the entire cable through until you reach the swaged end of the cable (see below).

Figure 68
Swaged end of OSG cable at bottom of rope coupling



2 Feed the cable around the OSG pulley in the pit plate (RIGHT to LEFT) and then bring it up to the motor raft.

Figure 69
Route OSG cable around OSG pulley at bottom

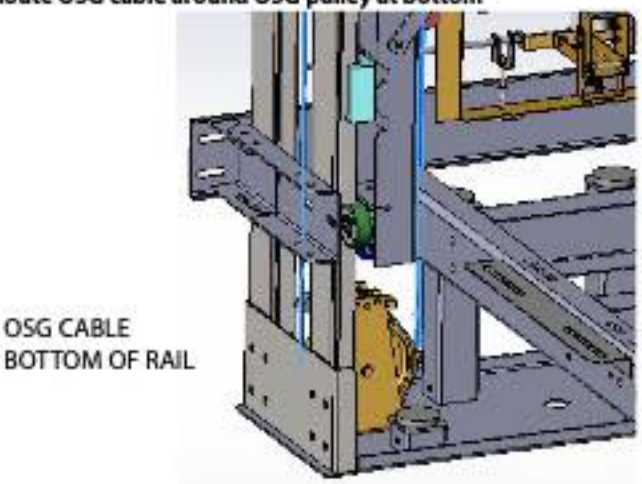

3 Feed the cable around the overspeed tensioner pulley on the motor raft (LEFT to RIGHT) and then bring it down through the cutout in the motor raft toward the lifting bracket safety lever.

Figure 70
Route OSG cable around tensioner pulley at top

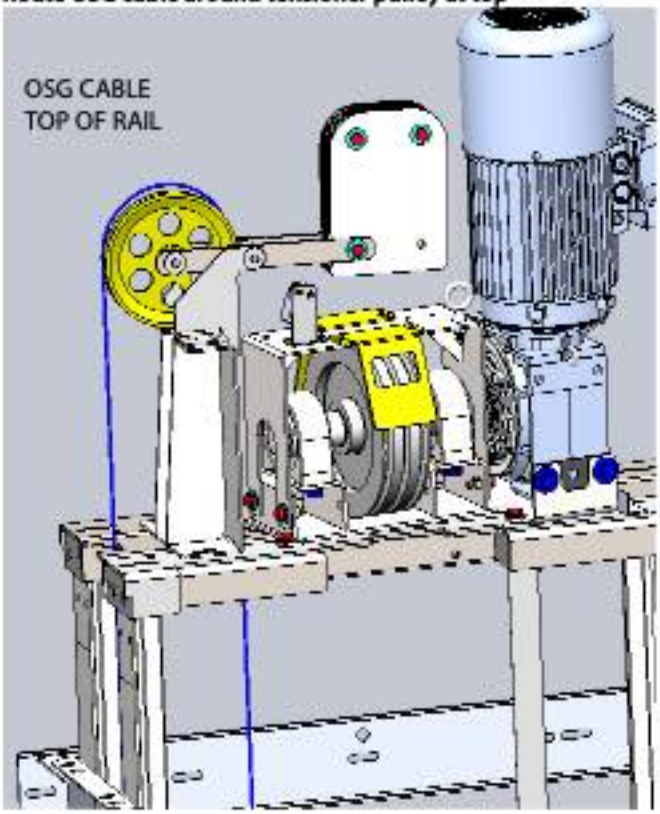

4 Attach the turnbuckle 105554 to the hole in the TOP of the lifting bracket rope coupling using the 4"-long chain tensioner from the following kit.

Description	Part Number	QTY
CHAIN TENSIONER	V0100091	1
NUT_HEX3/8-16GR5	102186	2
PIN_COTTER3/32x1	101059	2
SCREW HEX HEAD 5/16-18x1-1/2"	107680	1
NUT JAM NYLON LOCK 5/16-18	107681	1
CLAMP_CROSBY 1/4" G-429	103301	1
THIMBLE_H.D. 1/4" GAL.	103246	1

Figure 71
Attach turnbuckle to top of rope coupling

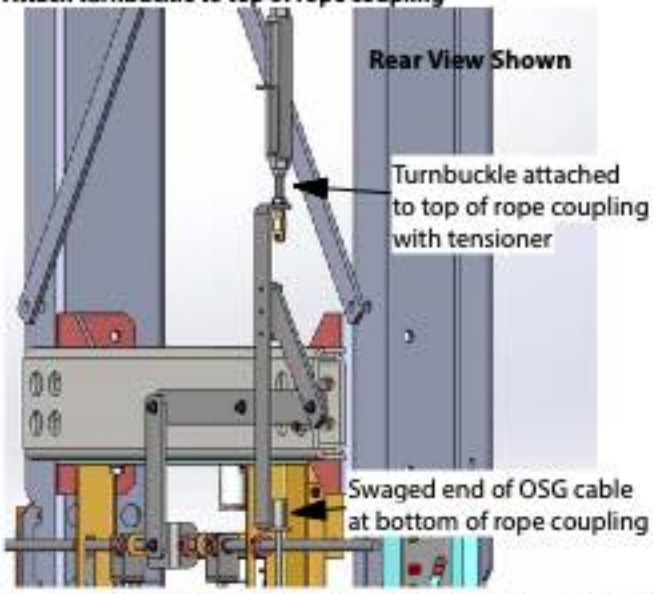

5 Attach the cable to the top of the turnbuckle using the 1-1/2" long bolt and lock nut from the kit above.

6 Secure the cable in place using a Crosby clamp and the hardware that comes with it (see below).

- **IMPORTANT**: Be sure to tape the loose cable end.

Figure 72
Attach OSG cable at top of turnbuckle



7 Install the cotter pins at the turnbuckle as shown in Figure 86.

Figure 73
Attach turnbuckle to top of rope coupling



8 Use the turnbuckle to adjust the tension of the overspeed rope. Using a force gauge, set the rope tension to 1.0" - 1.25" @ 2.0 lbf as shown below.

Figure 74
Force gauge



9 Install the provided safety wire on the turnbuckle ends to prevent rotation.

10 Bolt the OSG rope guard to the back side of the OSG.

Figure 75
OSG rope guard



Step 25
Install OSG slack rope switch assembly

1 Install the OSG slack rope switch assembly on the motor sheave cover as shown below.

2 Secure it in place using hardware from the following kit.

470426-HW, Motor Assembly Hardware Kit	
3/8-16X1 HEX HEAD BOLT	107500
3/8" FLAT WASHER	107472
3/8" NUT	102186
3/8" SPRING WASHER	102191

3 Note that one of the switch bracket holes is slotted so you can adjust the position of the switch as needed.

Figure 76
OSG slack rope switch assembly

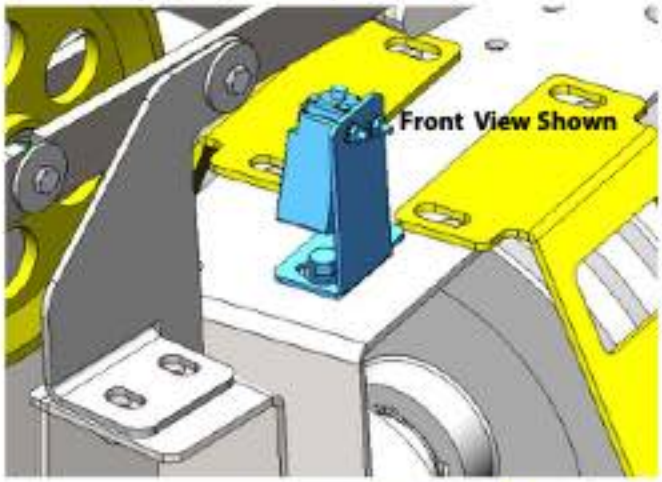

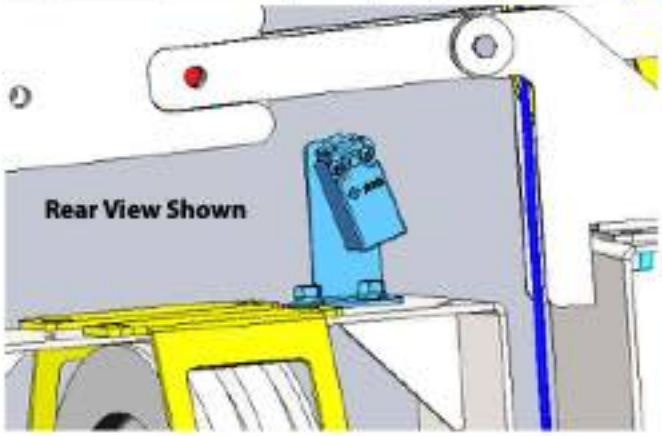

Step 26
Install pit stop switch (as required)

NOTE

If the installation includes the Door Buck Controller (DBC), the pit stop switch is preinstalled in the DBC enclosure. Otherwise, follow the steps below to install it.

1 Install the pit stop switch box in the pit area close to the slam side of the door frame. Install it about 4 feet above the lower landing so it can easily be reached while standing in the door opening.

2 Run the pit stop switch harness from the pit stop switch box to the main controller board and connect per the Electrical Schematics shipped with the elevator.

Figure 77
Pit stop switch



3 Ensure the end of the sill is set back 1.2" (30 mm) from the edge of the platform as shown below.

Step 27
Set safeties

1 Position yourself on the platform and loosen the 4 hex-head bolts in the back of the safety blocks. There are 4 access holes through the sling upright, as shown in Figure 78. Repeat this on the opposite safety block.

Figure 78
Access to safety block bolts

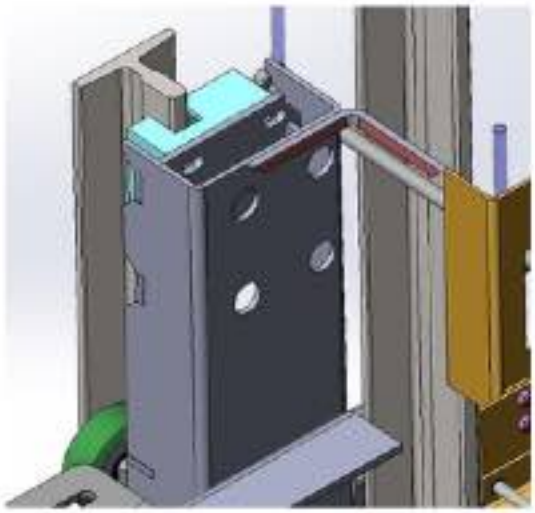

2 Adjust the blocks such that there is an equal distance between the safety block and the rail (X = X as shown in Figure 79). Tighten the hex-head bolts firmly.

Figure 79
Safety block to rail spacing

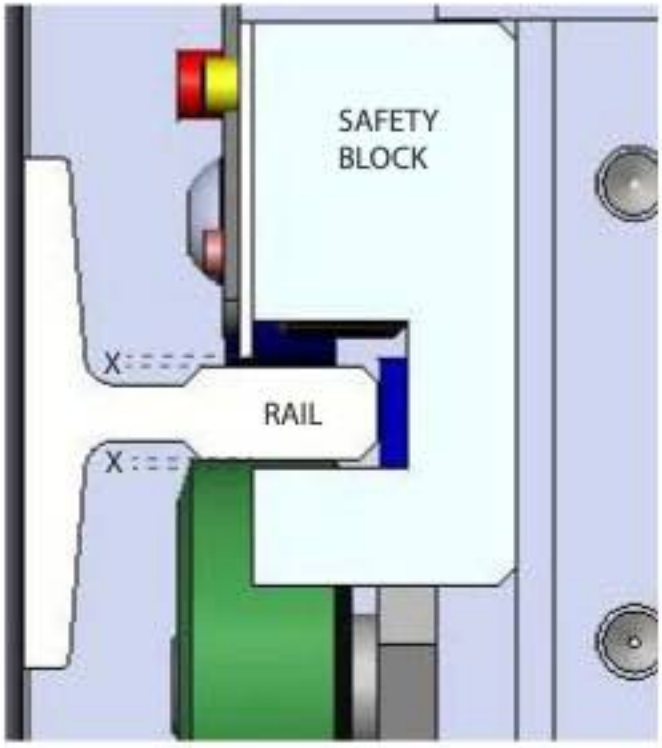

TOP VIEW LOOKING DOWN ON RAIL

3 Use the temporary run buttons to the run the lift down while you press down on the safety gear tripping arm.

4 While pressing on it, the tripping arm will move down once the platform starts to descend; the safety block's knurled wheels will be forced into position. This will wedge the safeties securely against the rails and prevent any further descent of the platform.

5 Check the clearance of the safety block and rail (as per Figure 79).

6 Check that the slack cable (plank) safety switch has tripped; adjust as required.

7 Use the temporary run buttons to move the elevator in the UP direction a few inches. This will apply tension to the cables and the mechanical safety device will automatically reset itself to its proper running position. The switch must be pushed manually to reset it.

8 Remember to check the slack cable (plank) safety switch. This switch must be manually reset every time the safeties trip or the elevator will not operate.

9 Ensure proper tensioning of the cables on reapplication of weight.

10 File the knurled wheel imprints on the guide rail if necessary.

Step 28

Install counterweight safety brake blocks (if applicable)

NOTE: If you have the **counterweight safety option**, the safety brake blocks may be shipped in a separate box or come pre-assembled to the counterweight safety assembly. If pre-assembled, you will need to remove them to install the counterweight carriage and then reinstall them.

NOTE: The new counterweight frame assembly is 4 inches longer than the old counterweight frame. Please accommodate this while roping the counterweight frame and cab.

Follow the steps below to install the blocks.

1 The Counterweight frame comes preassembled in the base crate, make sure all components are assembled and in proper alignment as shown below.

Figure 80

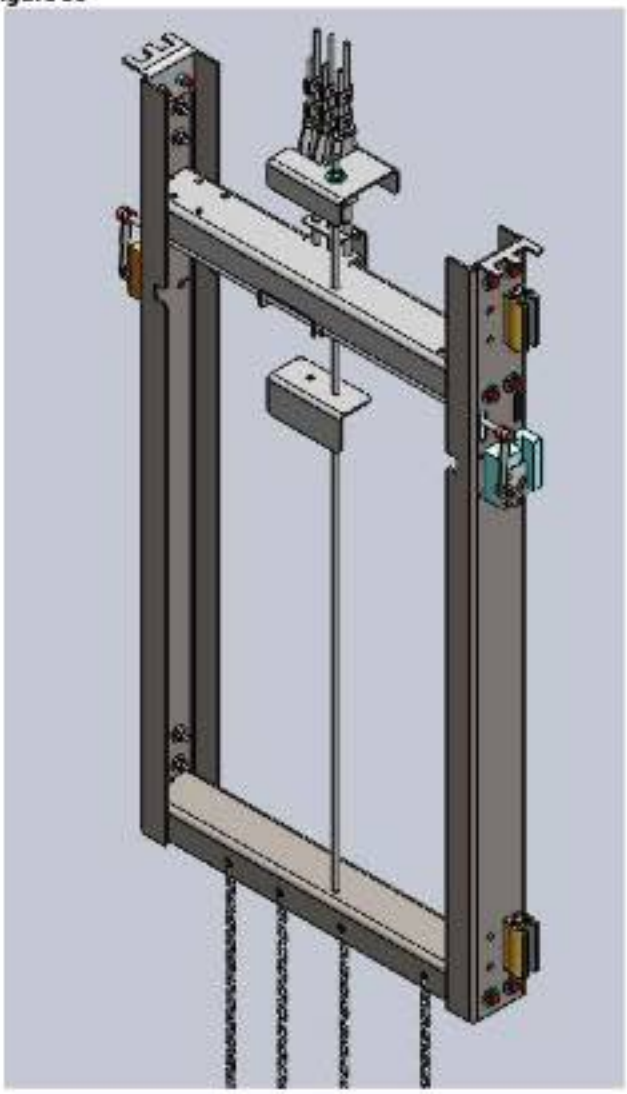

2 Remove the connecting lever in the safety block on both sides, this will allow us to do a smooth installation and when the counterweight frame is tensioned with the rope this connecting lever can be again connected. (Note: If this step is skipped the safeties will engage against the rail, so kindly complete this before lowering the carriage into the rails.)

Figure 81

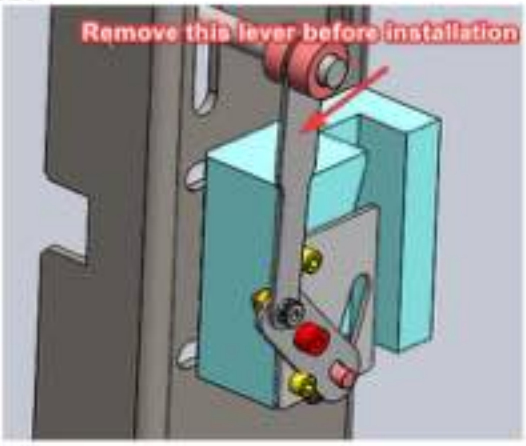

3 Loosen all the bolts of guide shoes and safety block on both sides, this gives us some play while sliding the counterweight carriage onto the T-Rails.

Figure 82

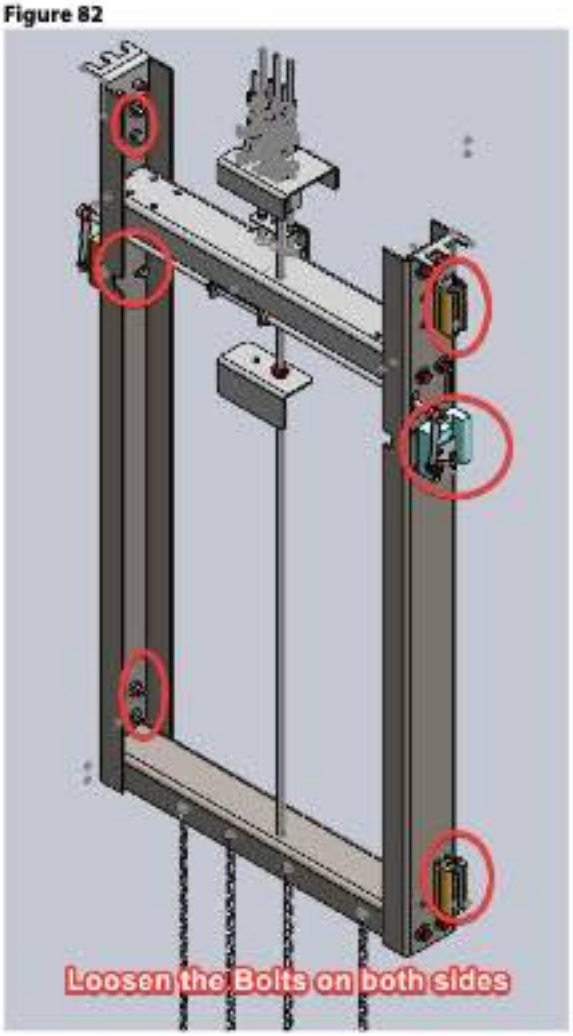

4 Install the counterweight carriage by lowering it down between the T-rails. Use the 2 guide shoes and safety block on each side of the carriage to guide it onto the rails.

Figure 83

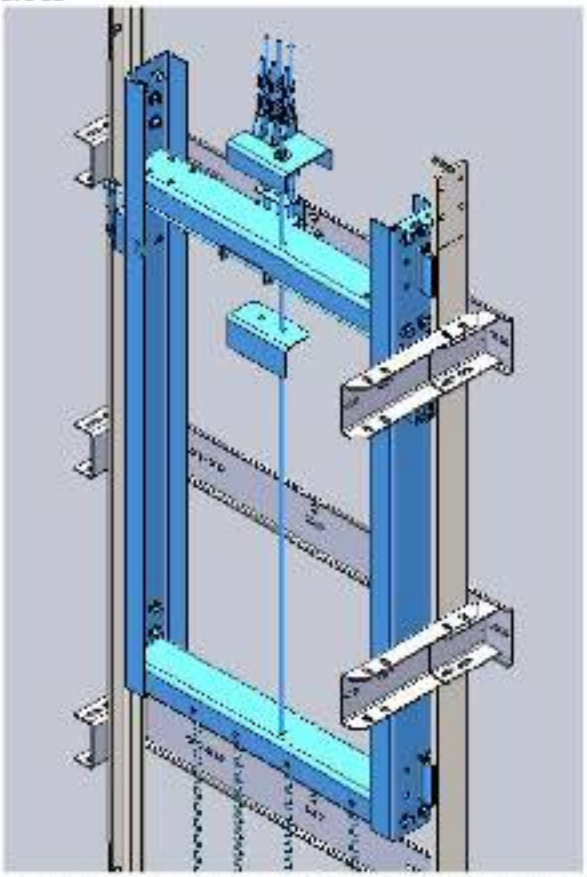

5 Adjust the Safety block in the slot provided such that the distance between the surface of safety block and the T-rail surfaces is 1.5mm and tighten the bolts.

Figure 84

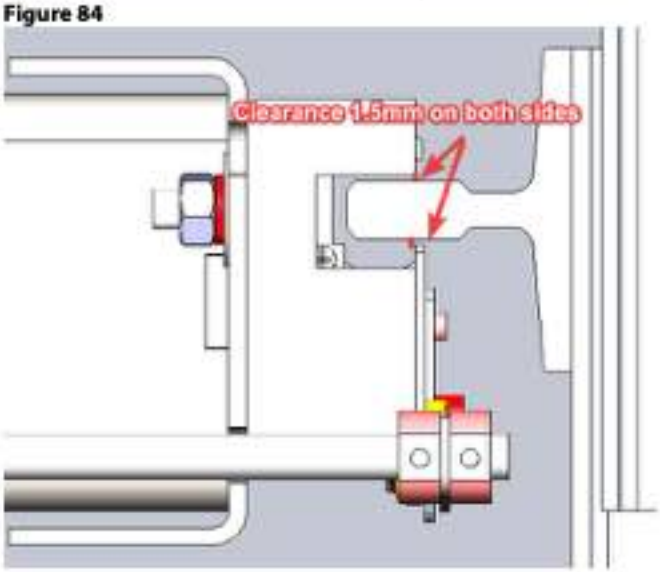

6 Tighten all the bolts of the Guide shoes that were loosened during the initial phase. Also, ensure all the bolts are properly tightened before loading weights.

7 Once the ropes are tensioned, assemble the connecting lever with the rod and secure it with the collar.

Figure 85

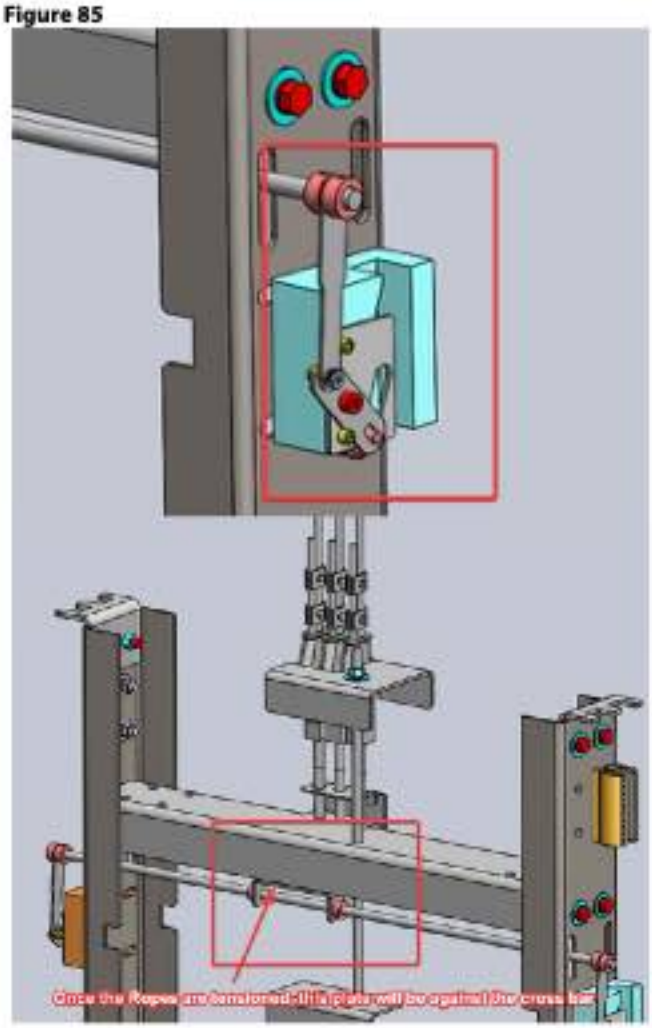

8 Add the weights as instructed according to each Job. The picture below depicts the safeties engaged and completely restrained from sliding downwards.

Figure 86



9 Run the elevator in the inspection mode and check for any interference. There shouldn't be any interference and it must run smoothly.

Step 29
Install selector (tape reader) and tape

1 Attach the tape to the top selector tape bracket on the motor plate using the bolt and corresponding hardware provided.

Figure 87
Attach tape to top selector tape bracket (on motor plate)

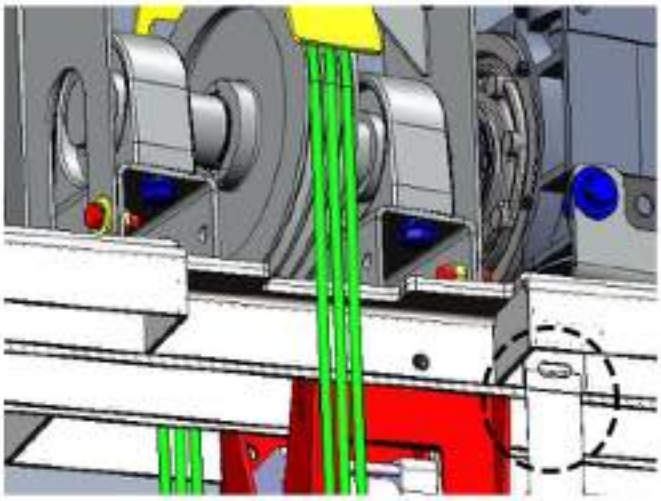

2 Attach the selector sling bracket to the top sling brace using the 2 bolts and corresponding hardware provided (see below). Note that the selector bracket is slotted for adjustment as needed.

3 Attach the selector (tape reader) to the lower end of this bracket using the selector mounting bracket 227943 and locking pin 106636 as shown below.

4 Feed the tape down through the selector to the bottom selector tape bracket in the pit plate.

Figure 88
Attach selector bracket/selector (tape reader) to sling brace

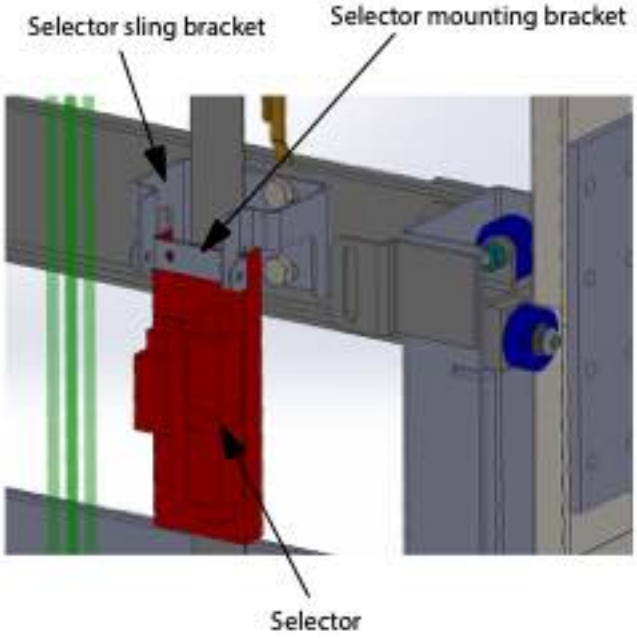

5 Attach the tape to the bottom selector tape bracket using the hardware from the Tape Clamp Kit below. To do this:

- Assemble the clamping plate assembly (plate and clamp) to the tape using the hardware in the kit.
- Connect the two springs from the clamping plate assembly to the selector tape bracket in the pit plate.
- Extend the springs to pull the tape tight and then tighten all hardware to secure the tape in place.

Figure 89
Attach tape to bottom selector tape bracket (in pit plate)

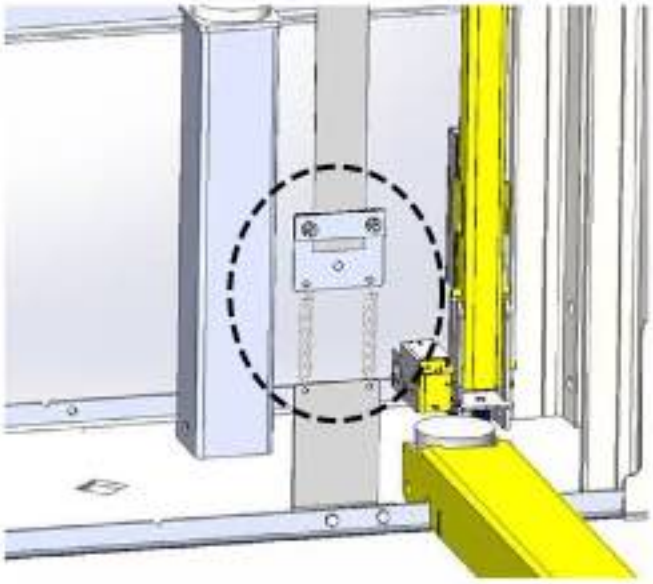

470656-ASSY, Tape Clamp Kit	
NUT_HEX5/16-18 GR5 WHITE ZNC	100544
WSHR_LCK5/16 WHITE ZNC	102190
HHCS_5/16-18x1GR5 WHITE ZNC	102746
WSHR_FLT 5/16USS	102747
SPRING EXT 0.5OD L4 WIRE 0.045	107507
PLATE, MAGNETIC TAPE	470656
CLAMP PLATE, MAGNETIC TAPE	470657
BOTTOM TAPE BRACKET	470685-3
WSHR_FLT1/4USS WHITE ZNC	101196
WSHR_LCK1/4 WHITE ZNC	101212
NUT_HEX1/4-20GR5 WHITE ZNC	102205
HHCS_1/4-20*1F/T	103398

Install limit switch cams

6 Clamp the top and bottom limit switch cams onto the tape using the clamps and hardware provided. The cams are shown in Figure 90 and Figure 91.

Figure 90
Limit switch cams

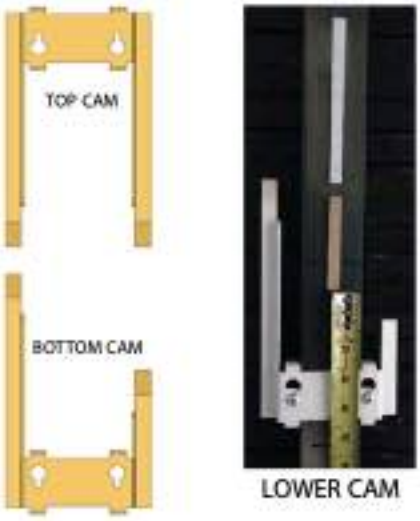

7 Be careful with the lower terminal limit (LTL) cam placement (shown in Figure 90).

8 You must locate the lower terminal U-shaped cam so that it pushes the lower terminal limit (LTL) switch as the lift travels below the lower landing.

9 The LTL switch is on the lower right side of selector.

10 The selector lights are on the car top junction board and duplicates are on the upper left side of the main controller board.

11 The ideal sequence is that as the lift approaches the lower landing the DL (down level) light comes on first.

12 Then the DZ (door zone) and P1 (position 1) lights come on as the DL light goes off. Floor level is when DZ and P1 lights only are on.

13 As the lift continues down, the UL (up level) light comes on the main controller board to indicate the lift is below the floor. This is the point of travel (approximately 1 inch below the bottom floor) that the LTL switch should be depressed.

14 As the LTL switch is pressed, the LT light next to TC5 on the main controller board should go OFF and the TC27 light on the upper right of the board should come on. This LT off and TC27 on is the reset signal to the controller and it should run in slow speed back up to floor level once reset.

15 The upper terminal limit (UTL) cam should push the upper terminal limit (UTL) switch as the lift runs past the top floor.

Figure 91
Tape reader assembly switches and cams

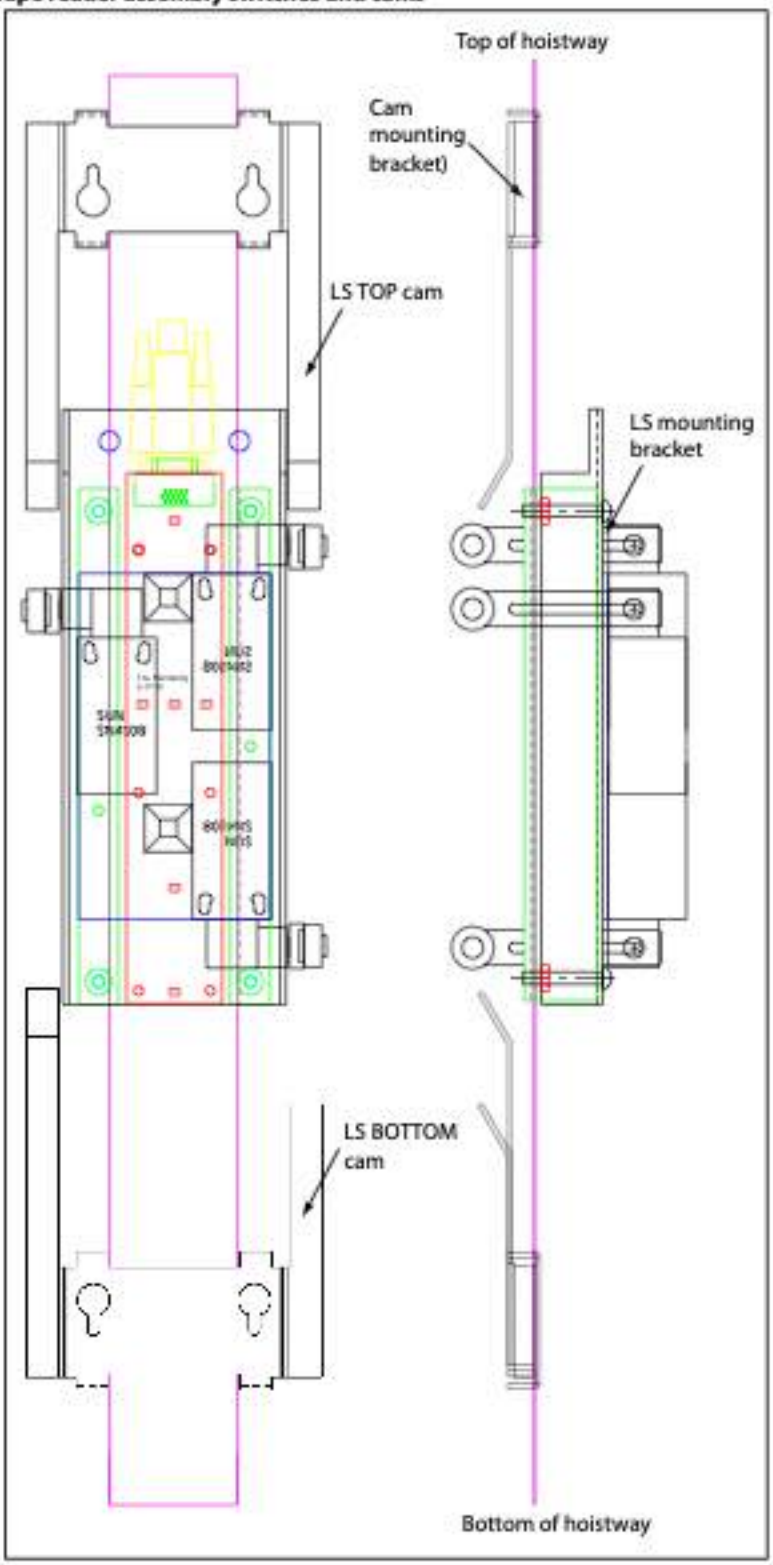

Install magnets

16 Level the cab with the floor and mark the center of the tape reader on the tape behind it with a marker. This marked point will be the center of the magnets. This procedure will position the magnets roughly in the correct position.

17 Use the Micro-6 magnet template part no. 227923 (shown at the right) to assist in placing the magnets on the tape. See the magnet configurations in Figure 92.

18 Once the cab is confirmed to be stopping in the center of the magnets, check the car sill and landing sill alignment and slide the magnets up or down accordingly so the cab stops even with the landing.

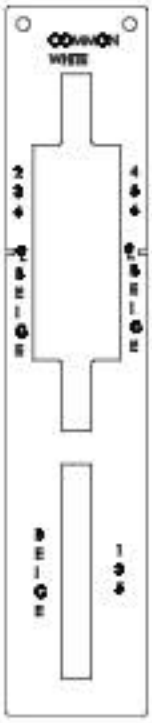

Figure 92
Selector magnet configurations

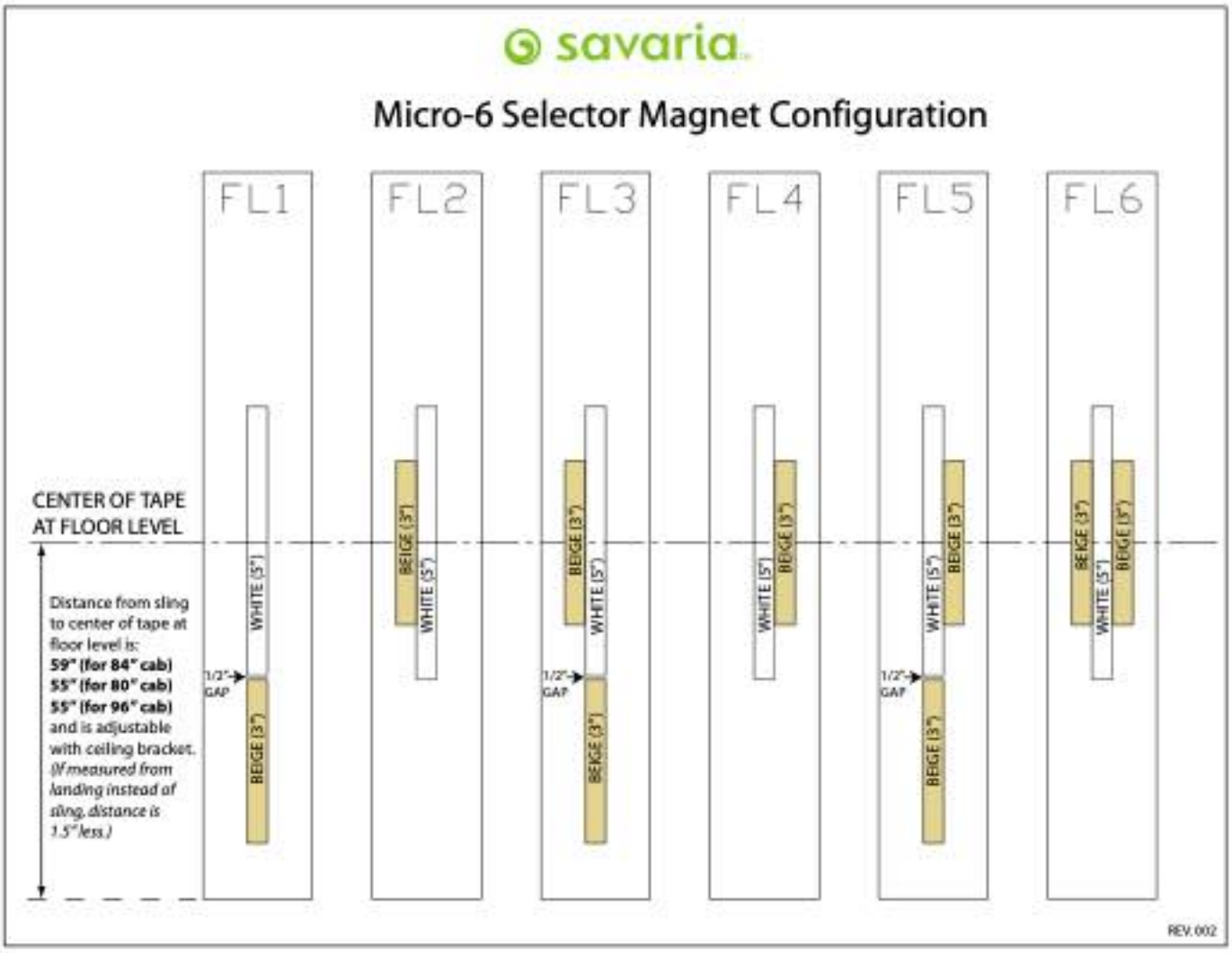

Step 30
Install hoistway access down limit switch and cam

The key switch in the hall call and COP enables doors to remain open and travel away from the top landing for maintenance.

The hoistway access down limit (HADL) switch is required so the mechanic/inspector can easily step onto the car top. It is only required/supplied when the top floor to next lower landing is greater than or equal to 122".

1 Attach the switch cam bracket to the sling as shown below using the 1/2" hardware provided.

Figure 93
Attach cam bracket to sling

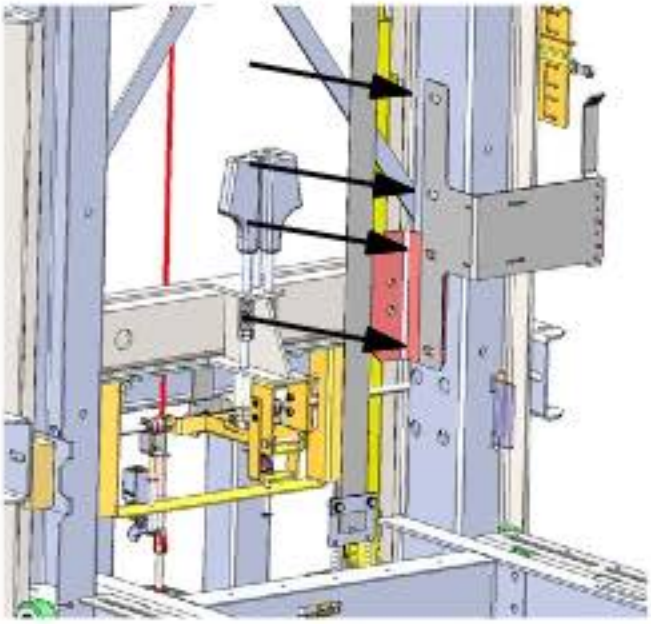

2 Assemble the cam to the cam bracket as shown below using the 1/4" hardware provided.

Figure 94
Assemble cam to cam bracket

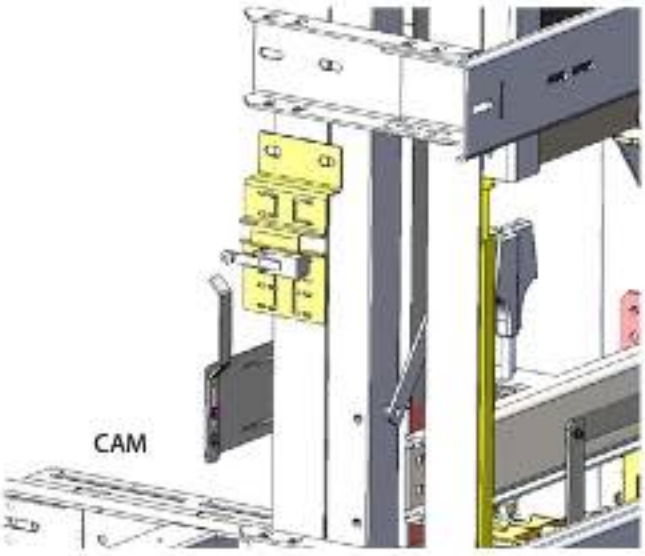

3 Install the hoistway access switch.

a. Assemble the switch to the switch bracket using the hardware provided.

b. Position the switch so it gets rotated by the cam to stop hoistway access in the down direction when the car ceiling is level with the top landing.

c. Attach the switch bracket to the rail using rail clips and associated hardware (2X).

Figure 95
Attach switch bracket to rail

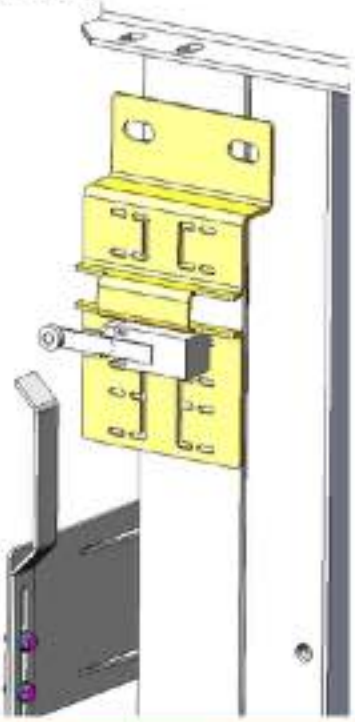

NOTE

Ensure the rotating latching switch is wired to the contact that is closed when the cam is above the switch. It will open when the car runs down and rotates the switch.

Step 31
Install light screens

Install the light screens.

NOTE

You MUST install the light screens on the cab walls BEFORE building the cab.
The power supply for the light screens is shipped inside the end cap of the light screen shipping tube; be sure to check both ends of the tube before discarding it.

IMPORTANT: Before attaching the light screens, you must determine which is the ACTIVE side and which is the DEAD side. If you slide your hand along the edge of the active side, you can feel the transmitter/receiver in the groove of the light screen. The groove on the other side is empty.

It is critical that the light screen transmitter and receiver are pointed directly at one another, facing one another so the light screen will activate properly.

Note that the light screen receiver for each door opening is mounted on the extrusion closest to the control wall and the light screen transmitter is mounted on the opposite wall (as shown in Figure 96).

A **Type 3 cab** is shown here as an example. The procedure will vary slightly depending on your cab type. (See the next page for a Type 1L cab with scissor gate).

1 For the first light screen:
   a. Place one light screen against the corresponding wall mounting extrusion making sure that you line up the bottom of the light screen with the top of the platform.
   b. Secure the light screen to the wall mounting extrusion using five #6-3/4 screws per light screen (P/N: 105792).
2 For the second light screen:
   a. Place the second light screen against the corresponding wall mounting extrusion, making sure that you line up the bottom of the light screen with the top of the platform.
   b. Secure the light screen to the wall mounting extrusion using five #6-1" screws per light screen (P/N: 105792-B).
3 Feed the light screen cables through the ceiling extrusion plates and connect per the *Electrical Schematics*.

Figure 96
Light screen installation

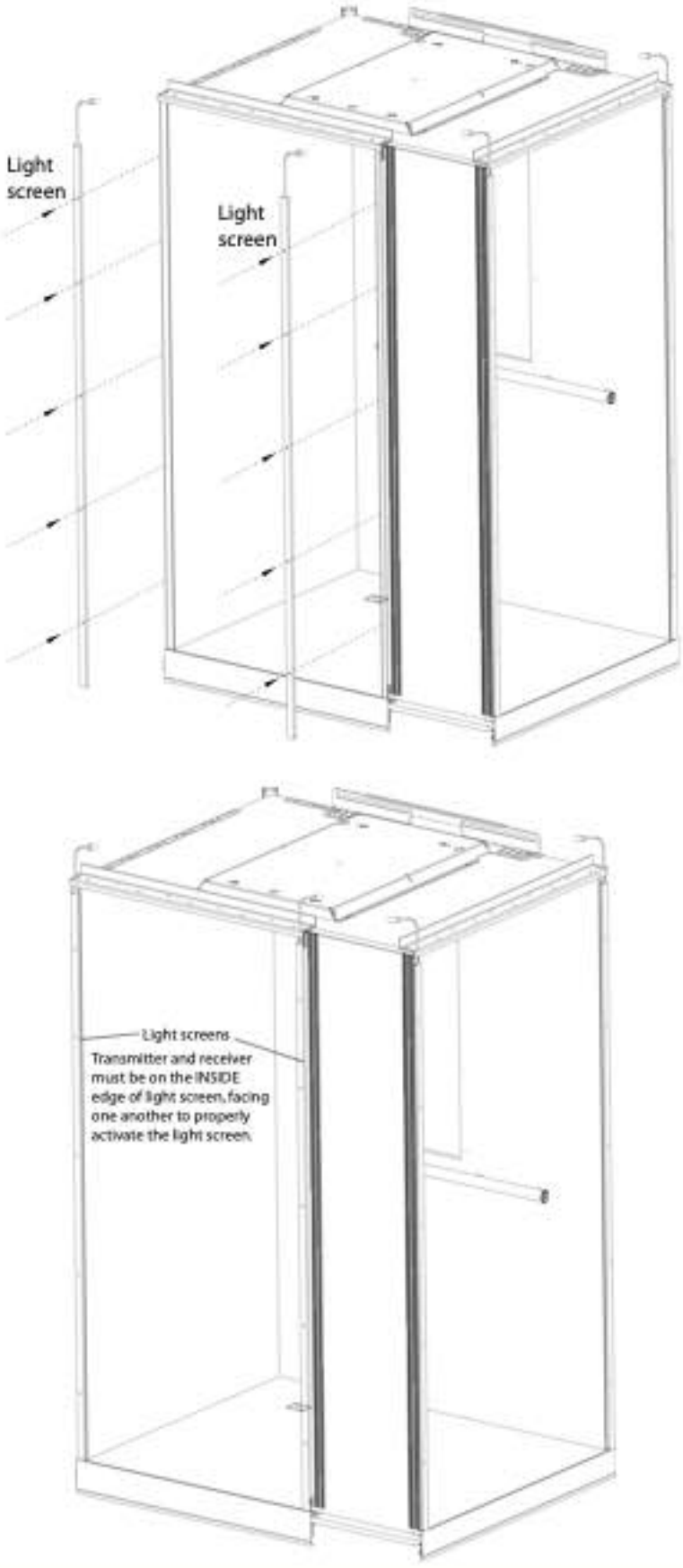

A **Type 1L cab with scissor gate** is shown in Figure 97.

1 Attach the light screens to the slam post and pocket as shown, using five #6-1" screws per light screen (P/N: 105792-B).

2 Feed the light screen cables through the ceiling extrusion plates and connect per the *Electrical Schematics*.

Figure 97
Light screens (Type 1L cab with scissor gate)

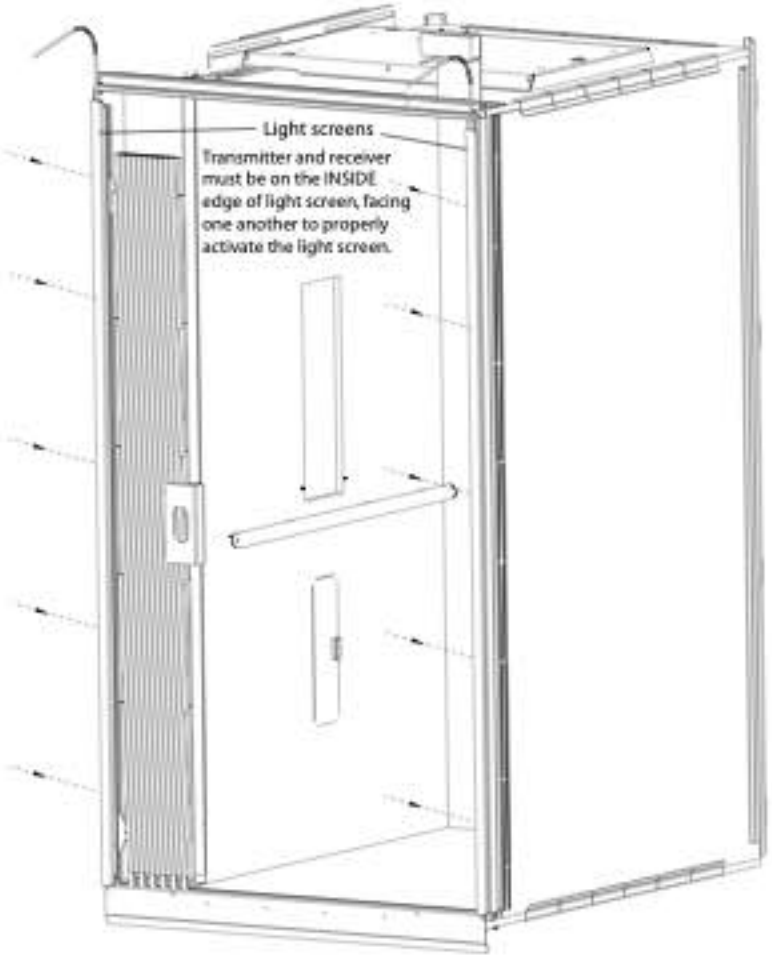

Step 32
Assemble cab

To assemble the cab, follow the steps below (for a Type 1R cab). Refer to "APPENDIX D: Cab Information" on page 96 for illustrations of the various cab types and the order of installation for the cab components.

IMPORTANT

This procedure provides assembly instructions for a **STANDARD** cab. For **STEEL** cab assembly instructions, refer to Tech Bulletin, P/N 001155. For **GLASS** cab assembly instructions, refer to Tech Bulletin, P/N 001024.

NOTE

You MUST install the light screens on the cab walls BEFORE building the cab. The light screens were installed in a previous step and are not shown in the following procedure.

1 Ensure the cab floor is level from side to side.

2 Remove pre-assembled carriage bolt and nut, and attach strapping to sling.

Bolt and nut pre-assembled to strap

1) 1 x $\frac{3}{8}$-16 x $\frac{3}{4}$" carriage bolt
   1 x $\frac{3}{8}$ lock washer

Attach with pre pack 105286

1) $\frac{1}{2}$" wood screws

3 Lift the cab *COP* wall onto the cab floor with the cab reinforcement brackets on the back of the wall facing the sling.

- **NOTE**: Each cab reinforcement bracket has a bolt pre-assembled in the slot of the bracket. You need to line up this bolt with the slotted bracket at each side of the sling top brace as shown in Figure 98.

Figure 98
COP wall cab reinforcement bracket to sling top brace

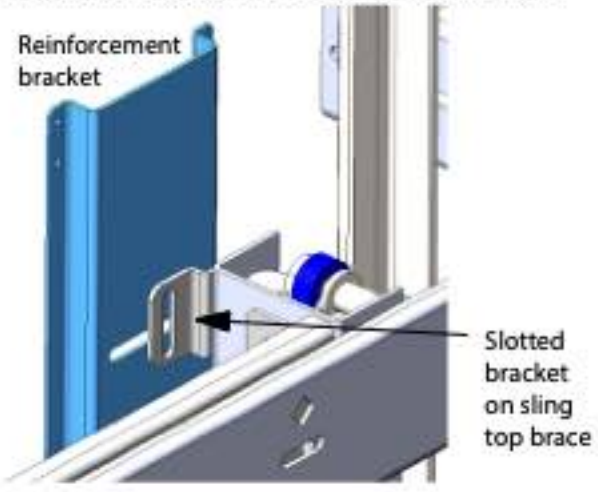

4 Place the next cab wall onto the cab floor.

5 To secure the walls together at the corners use a channel joiner. (shown in Figure 99). Tap the joiner into place using a soft mallet.

Figure 99
Cab walls channel joiner

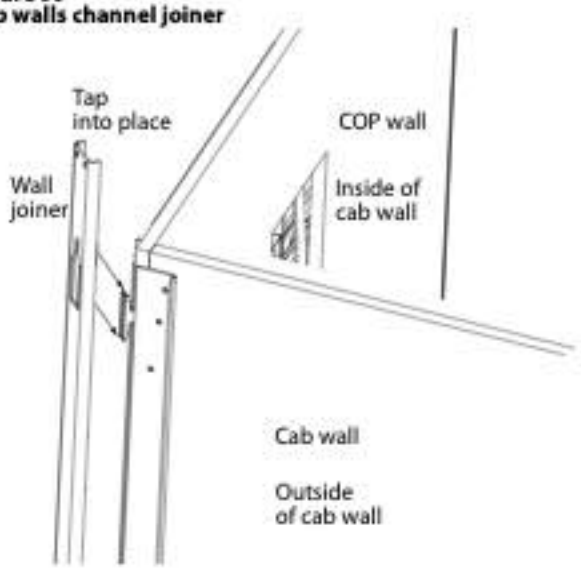

Attach with channel joiner
226049 (80" cab) / 226048 (96" cab)

6 Repeat the preceding step for the third wall if a one door elevator.

7 Place the ceiling onto the cab walls.
The walls snug to the guide strips along the ceiling edges.

Figure 100
Ceiling placement

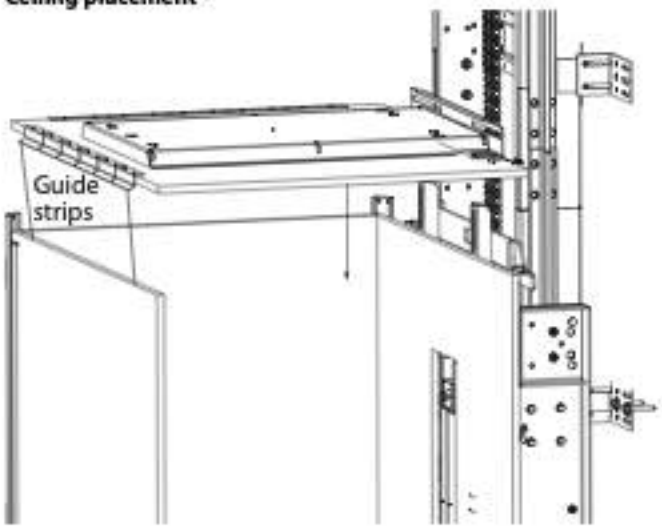

8 Attach the ceiling to the cab walls.

CAUTION

The wood screws can split the cab walls. Be sure to pre-drill to avoid cab wall damage. Use a $\frac{1}{8}$" drill bit.

Once these screws pierce the cab walls they help support the overall cab structure.

Figure 101
Ceiling assembly

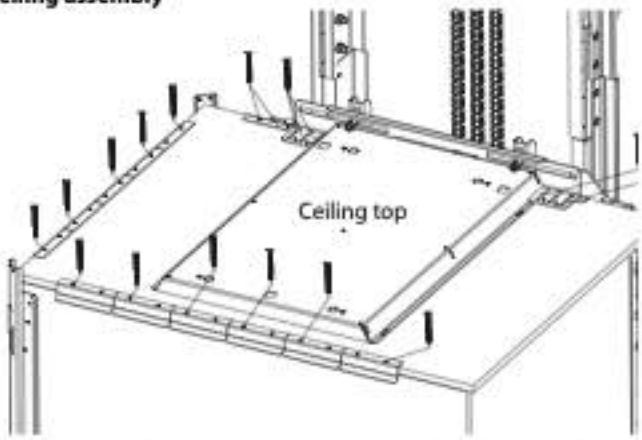

Attach with pre pack C5290149 (was 227546)

#8 x 1$\frac{5}{8}$" wood screws

9 Assemble the ceiling to the wall strap at the pocket side.

Figure 102
Ceiling to wall strap at pocket side

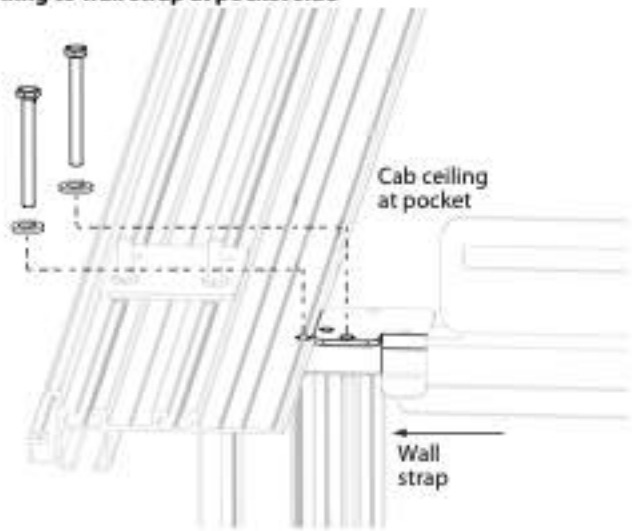

Attach with pre pack 226660

2 x $\frac{1}{4}$"-20 x 2$\frac{1}{2}$" hex head bolts
2 x $\frac{1}{4}$" lock washer

10 Assemble the ceiling to the wall strap at the slam side.

Figure 103
Ceiling to wall strap at slam side

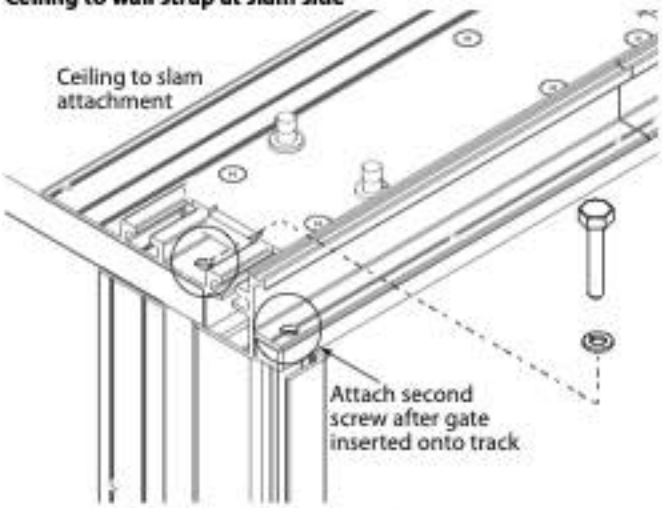

Attach with pre pack 226660

1 x $\frac{1}{4}$" - 20 x 1$\frac{1}{2}$" hex head bolt
1 x $\frac{1}{4}$" lock washer

11 Attach the floor to the cab walls around the perimeter of the floor.

CAUTION

The wood screws can split the cab walls. Be sure to pre-drill to avoid cab wall damage. Use a $\frac{1}{8}$" drill bit.

Figure 104
Wood screws to help support wall structure

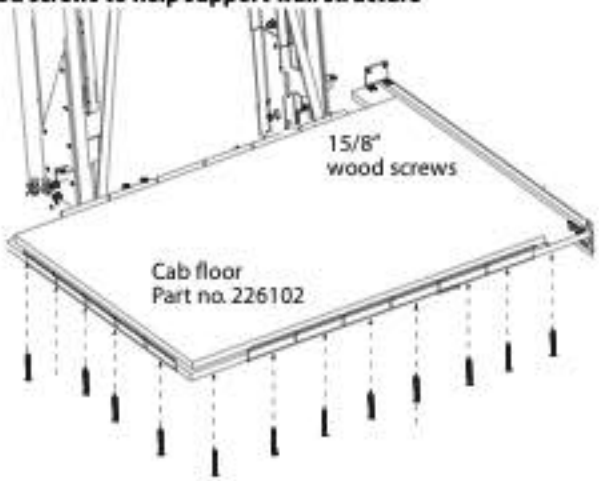

Attach with pre pack C5290149 (was 227546)

#8 x 1$\frac{5}{8}$" wood screws

12 Attach the floor to the wall strap at the slam side.

Figure 105
Floor to wall strap at slam side

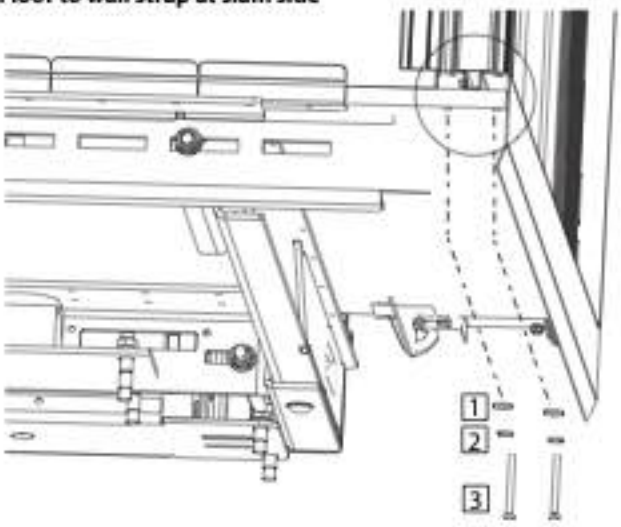

Attach with pre pack 226660

1) 2 x $\frac{1}{4}$" flat washer
2) 2 x $\frac{1}{4}$" lock washer
3) 2 x $\frac{1}{4}$"-20 x 2$\frac{1}{2}$" hex head bolts

13 Attach the floor to the wall strap at the pocket side.

Figure 106
Floor to wall strap at pocket side

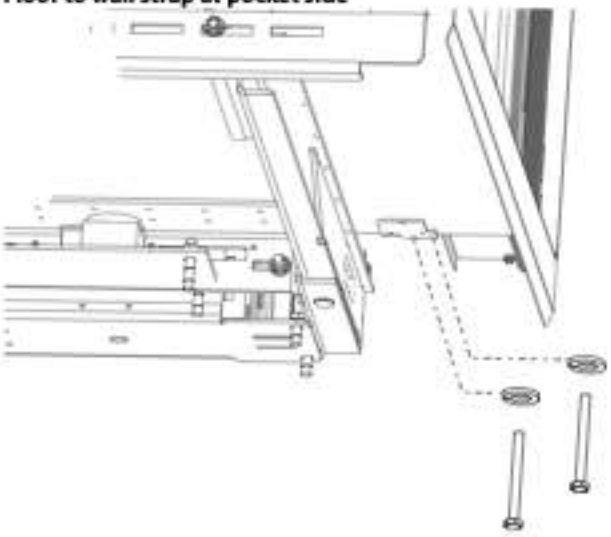

Attach with pre pack 226660

4) 2 x $\frac{1}{4}$" lock washer
5) 2 x $\frac{1}{4}$"- 20 x 2$\frac{1}{2}$" hex head bolts

14 Once the cab walls are fully assembled, secure the cab reinforcement brackets (on the back of the COP wall) to the slotted brackets at each side of the sling top brace. **Note that you need to do this through the COP cutout in the COP wall.** Secure in place with a flat washer, lock washer, and nut on each pre-installed bolt. Install slotted U-shims (320651) on the bolt as needed to ensure the cab walls and ceiling are level.

Figure 107
Cab reinforcement brackets

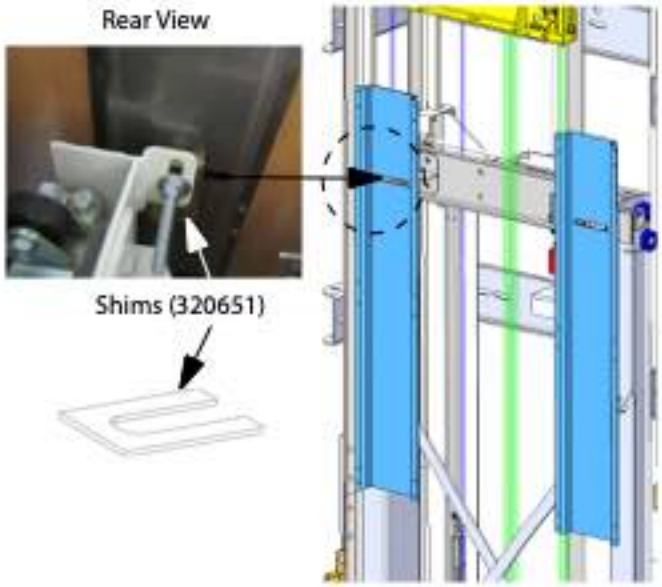

15 Once the car top box has been installed, you can connect the ceiling pot lights to T10 on the car top board.

The ceiling pot lights connector and car top stop switch connector are housed in flexible conduit on the cab ceiling.

16 Once the car top box has been installed, you can connect the car top stop switch between SR2 and LS1 on the car top board. Note that the car top stop switch location is always on the sill side.

NOTE

When the car top switch is activated, you will need to reset the controller.

Figure 108
Car top stop switch

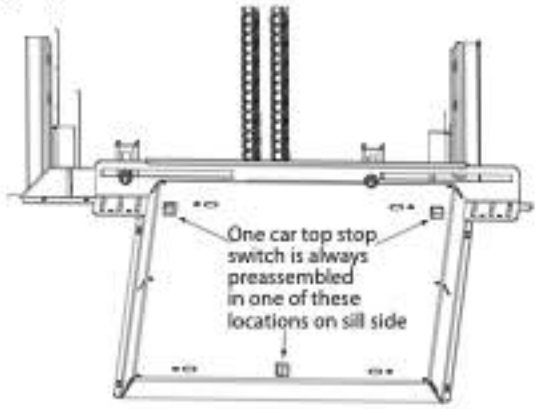

Step 33
Install car operating panel (COP)

Install the car operating panel.

NOTE

Refer to Appendix H for Set up, programming (including how to turn off auto-answer) and troubleshooting of the Rath 2400.

1 Attach the COP support bracket to the back side of the COP wall at the bottom of the cutout (two screws).

Figure 109
COP support bracket



COP attaches to bracket at these two points (from front of COP wall)

2 Insert the car operating panel (COP) into the COP wall cutout from inside the cab. Note that the clips at the top of the COP MUST slide in behind the cab wall to hold the COP in place. Bend the clips slightly to accommodate 3/4" walls as necessary.

3 Secure the COP to the COP support bracket with the two screws provided.

4 Once the car top box has been installed, you can connect the red, blue and yellow CAT-5 cables from the COP board to connectors T11, T12 and T13 on the car top board

Figure 110
COP installation





Secure COP to support bracket with two screws

Step 34
Install phone

Mount the phone box (if equipped) and install the slim corded phone in the cab.

Procedure

1 If the cab has a cutout for a phone box located below the handrail on the COP wall, install the phone box as described.
   a. Insert the phone box into the COP wall cutout. Use 8 screws to fasten the box to the 3/4" COP wall through the pre-drilled holes in the box (2 at the top, 2 at the bottom and 2 on each side).
   b. Ensure the box is installed far enough in the wall so the door plate is flush against the cab wall.

Figure 111
Phone box



   c. Place the phone in the phone box.
   d. Feed the phone cord out through the top hole in the phone box, route it to the car top box and plug it into T8 (phone jack receptacle) on the car top board. Tie-wrap the cord as required so it doesn't get pinched when the cab moves.
   e. Verify the phone is working.
2 If the cab does not have a cutout for a phone box, you will need to mount the phone directly on the COP wall as described.
   a. Determine where you want to mount the phone on the COP wall and drill a hole big enough to feed the phone cord out through the wall.
   b. Feed the cord out through the wall.
   c. Mount the phone on the COP wall using the screws provided with the phone.
   d. Route the phone cord to the car top box and plug it into T8 (phone jack receptacle) on the car top board. Tie-wrap the cord as required so it doesn't get pinched when the cab moves.
   e. Verify the phone is working.

IMPORTANT

Do NOT turn over the elevator prior to having an active phone line and having properly tested the phone or automatic dialer phone (as applicable).

Step 35
Install car top box

Install the car top box and connect the wiring.

Procedure

1 Mount the car top box on top of the cab as appropriate for your installation using the hardware provided.

NOTE

Install the car top box near an entrance for easier access to activate the car top stop switch and for service.

Figure 112
Car top box

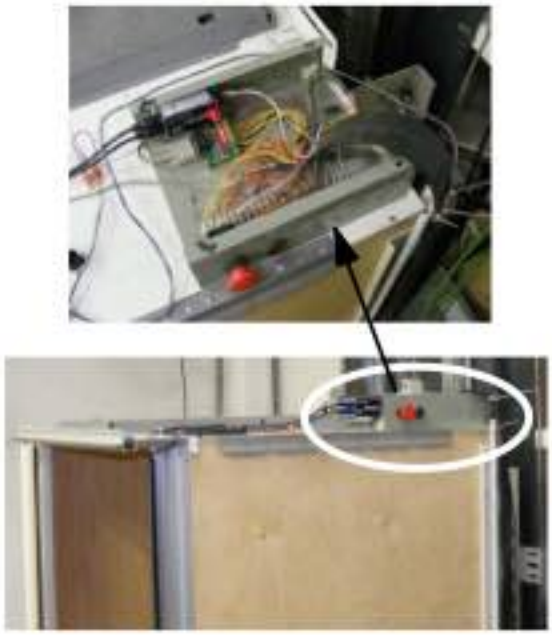

NOTE

The flat traveling cable is standard. The round traveling cable is optional at an additional cost.

NOTE

Be sure to connect the **pre-wired end** of the traveling cable to the car top box.

2 Insert the traveling cable into the car top box through the appropriate cutout. For the standard flat traveling cable, use the clamp pre-installed in the car top box (one on each side) to hold the traveling cable in place.

Figure 113
Clamps in car top box for flat traveling cable

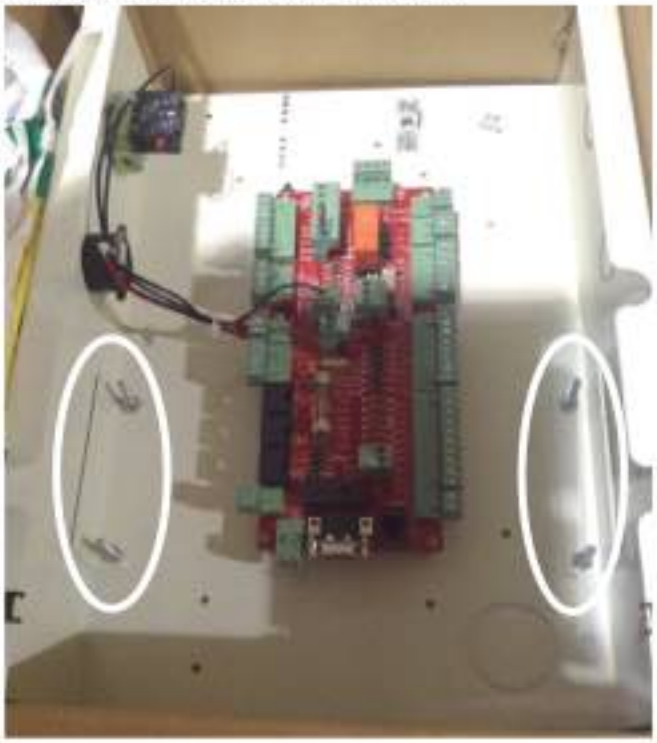

3 Make the following connections to the car top box per the *Electrical Schematics*:
- Pre-wired end of traveling cable to car top box T1, T2, T3, T4, T5, T7
- Tape reader - T6
- Phone - T8
- Fan - T9
- Cab pot-lights - T10
- Car operating panel (COP) - T11, T12, T13
- Selector (tape reader) switches - T14
- Car top stop switch - T15
- Final limit switch - T17, pins 1 and 2
- Slack chain (plank) switch - T17, pins 3 and 4
- Front gate operator - T18 (in a later section)
- Rear gate operator - T19 (in a later section)
- Transformer - T20
- Buzzer - T21
- Aux power - T22

NOTE

Don't forget to connect the cable from J6A on the tape reader selector PCB to J6 on the car top board.

Step 36
Install traveling cables

1 The traveling cables exit the back of the controller box at the bottom. Route them to the underside of the platform.

2 Attach the traveling cables to the underside of the platform using the under cab cable bracket. Secure the under cab cable bracket to the bottom of the platform using #10-1/2" wood screws. Leave a large loop of cable at the point where the traveling cables exit the under cab cable bracket. The loop should be large enough to accommodate the full up and down travel of the elevator. Ensure there is sufficient slack in the cable when the elevator is at the top and bottom landing before final fastening or routing of traveling cable.

3 Insert both traveling cables under the wedge.

4 Route the traveling cables up to the hoistway junction box.

5 To support the load of the cables, install the tension relief bracket 1 foot (305 mm) below the bottom of the hoistway junction box. The tension relief bracket supports the weight of the traveling cables, so that this weight does not act on the hoistway junction box terminals.

Figure 114
Hoistway junction box and bracket



6 Ensure that when the elevator is run to the top floor, there is at least 12" (305 mm) of cable hanging below the tension relief bracket and a gentle bend connecting to the cab. With the elevator at the bottom landing, ensure that the cable is not too tight and is not rubbing on the side of the platform or piling up on the pit floor. If the cable is not installed properly, shortened cable life will result.

7 If there is extra traveling cable, do not let it pile up on the pit floor. Fold it neatly and fasten the excess traveling cable to a brace under the platform, or fold it between the hoistway junction box and the tension relief bracket.

Step 37
Install cab gate pocket

IMPORTANT

For the Panel-fold Gate, follow Steps 40 to 45.
For Bi-fold Doors, refer to the Bi-fold Doors Installation Guide, P/N 001075.
For Auto Slim Doors, refer to the Auto Slim Doors Installation Guide, P/N 000877.

Attach the cab gate pocket to the sill and track.

1 Insert the pocket onto the sill and fasten in the order shown in Figure 115.

Figure 115
Pocket on sill

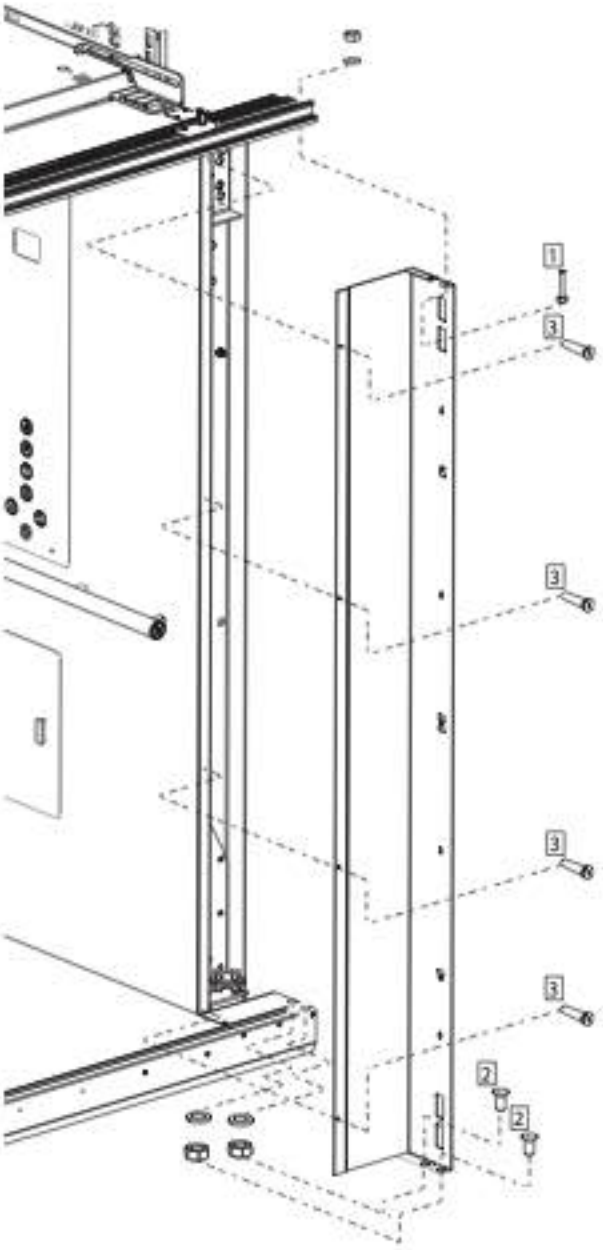

Attach with pre pack 226660

1) 1 x ¼" - 20 x 1¼" hex head bolt 1 x ¼" lock washer	2) 2 x ¼"-20 x ½" phillips head screw 2 x ¼" lock washer 2 x ¼" nut 3) 4 x phillips head screw

Step 38
Install cab gate

Attach the cab gate to the pocket. For the Enterprise gate, see page 60.

1 Disassemble the two screws at the top front of the gate track on the slam side and remove the corner piece.

Figure 116
Gate track corner piece location

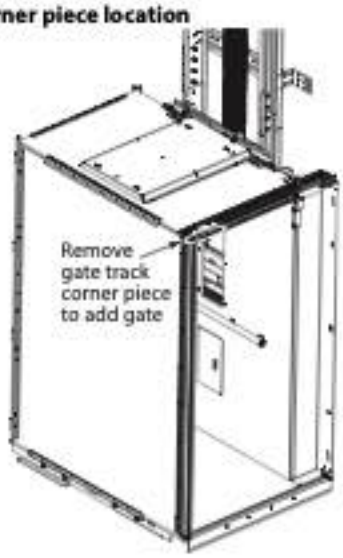

Figure 117
Gate track corner piece

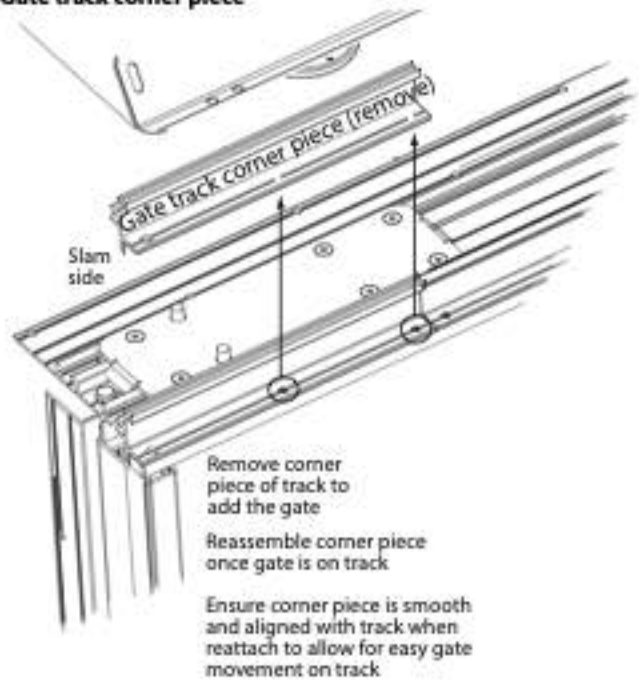

Disassemble...

2 x $\frac{3}{8}$" screws

2 Remove the screws along the track to partially pull out the plastic insert.

Figure 118
Gate track plastic insert

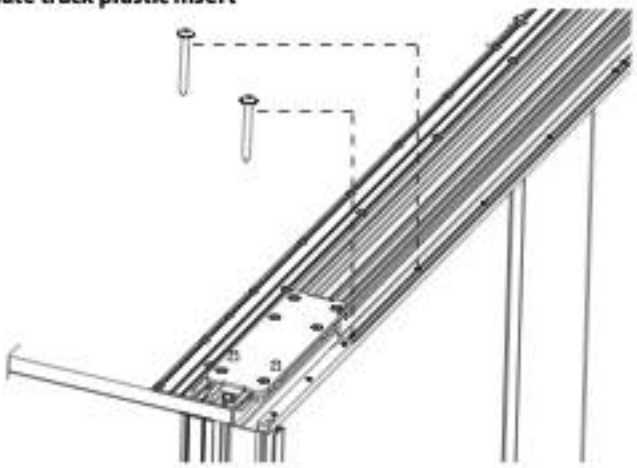

3 Partially pull out the plastic insert from the top of the gate track.

Pull out to insert the gate onto the track.

Figure 119
Plastic insert

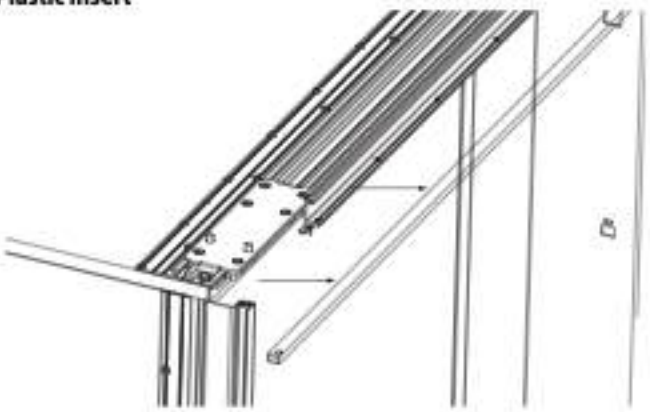

4 Remove the large track mounting plate, if equipped, to help with gate installation.

Figure 120
Remove large track mounting plate

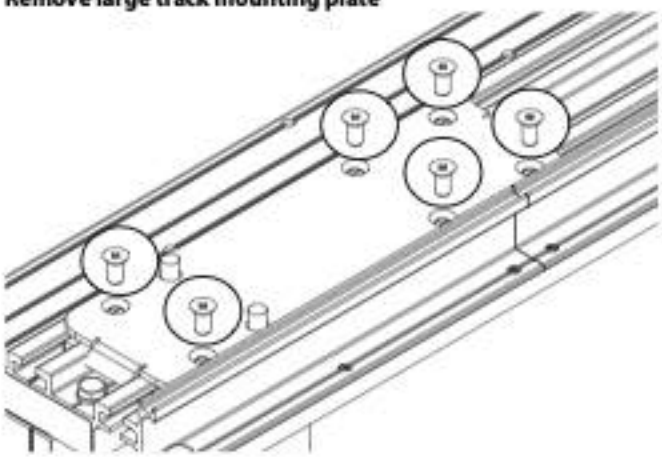

5 Place the gate onto the track at the corner piece area and slide to the pocket side.

Figure 121
Gate on track

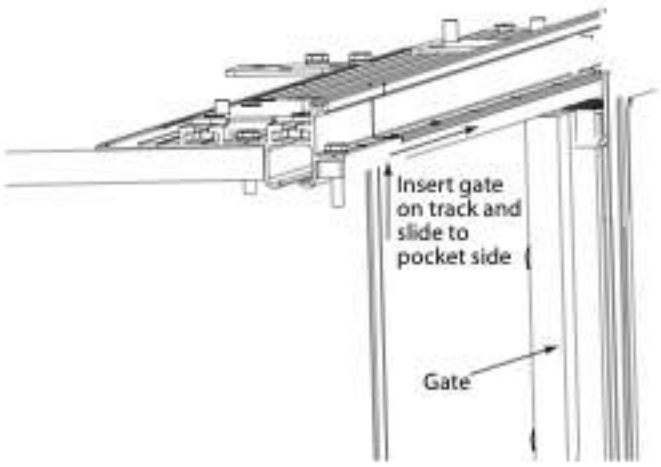

6 Place the large mounting plate, if equipped, back onto the gate track. See Figure 120 on page 57.

7 Put the plastic insert back onto the track. See Figure 119 on page 57 and Figure 118 on page 57.

8 Reassemble the screws and corner piece to the top of the track. See Figure 117 on page 57.

9 Place the flanges into the gate holes.

Figure 122
Flange part no. 106151

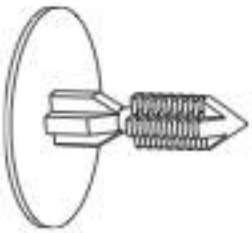

10 Push the gate into the pocket.
The flanges insert into the pocket holes. There is no other attachment necessary for the gate to attach to the pocket.

11 Be sure to attach the magnet plate for the gate on the slam side.

Figure 123
Flanges into gate

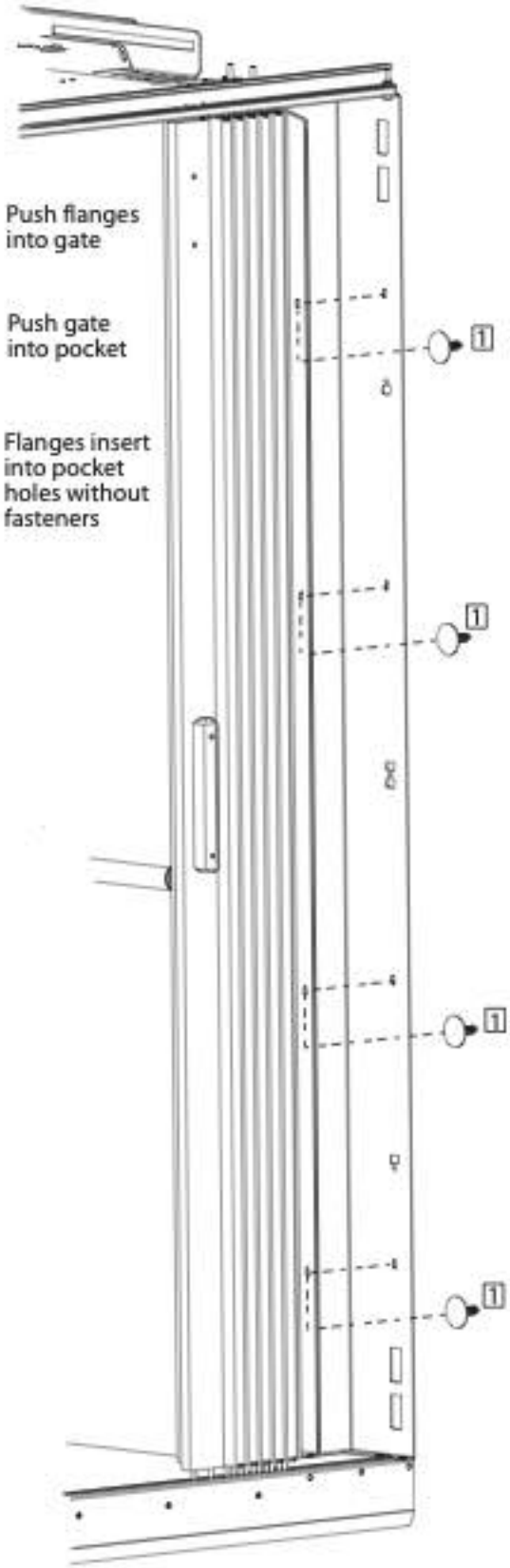

12 Place the gate stabilizer bar onto the gate track at the gate track corner piece area and slide to the pocket side.

Figure 124
Stabilizer on gate track

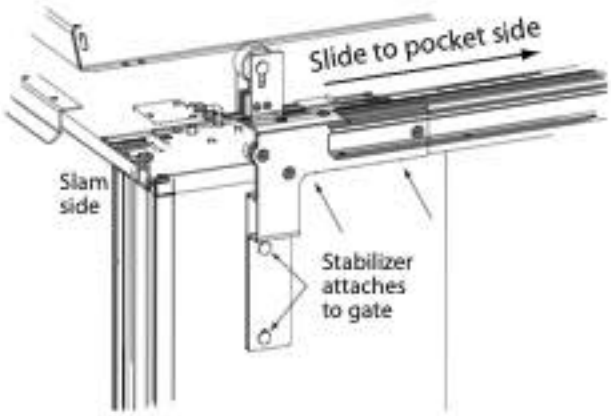

13 Assemble the stabilizer bar to the gate.

Figure 125
Gate attachment to stabilizer

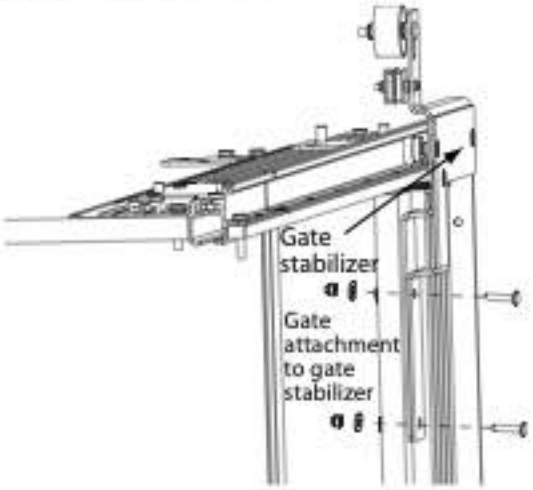

Attach with pre pack 226442

2 x $\frac{1}{4}$" - 20 x $1\frac{1}{4}$" carriage bolts

14 Reattach the front gate track corner piece. Refer to Figure 117 on page 57.

15 Assemble the ceiling corner at the slam side.

Figure 126
Ceiling to slam

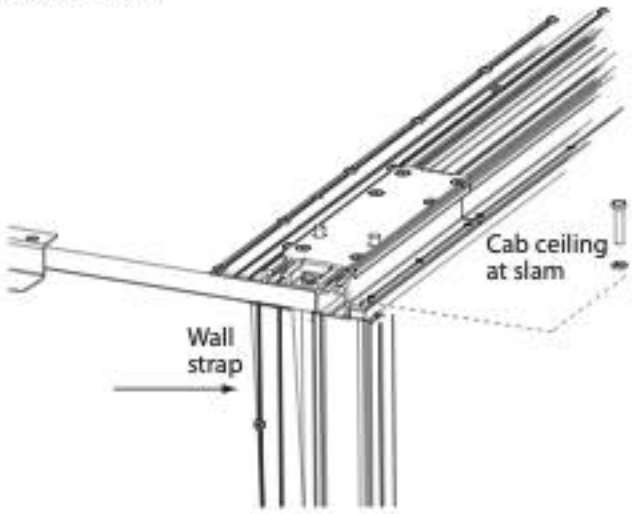

Attach with pre pack 226660

2 x $\frac{1}{4}$"-20 x $2\frac{1}{2}$" hex head bolts
2 x $\frac{1}{4}$" lock washer

16 Attach the floor support bracket to the floor. Refer to Figure 101 on page 50.

INSTALL ENTERPRISE GATE

1 Line up and tighten all gate rollers.
2 Remove the gate track from the ceiling.
3 Load the gate into the sill track.
4 Slide the ceiling gate track onto the gate rollers.
5 Tilt the gate and track up to the ceiling.
6 Reinstall the track bolts to secure it to the ceiling.
7 The pocket should have pre-drilled holes (top and bottom) for through bolts. Bolt through the fixed post with the threads through the pocket, and then install washers and nuts from the car top and from under the platform.

Figure 127
Install Enterprise gate

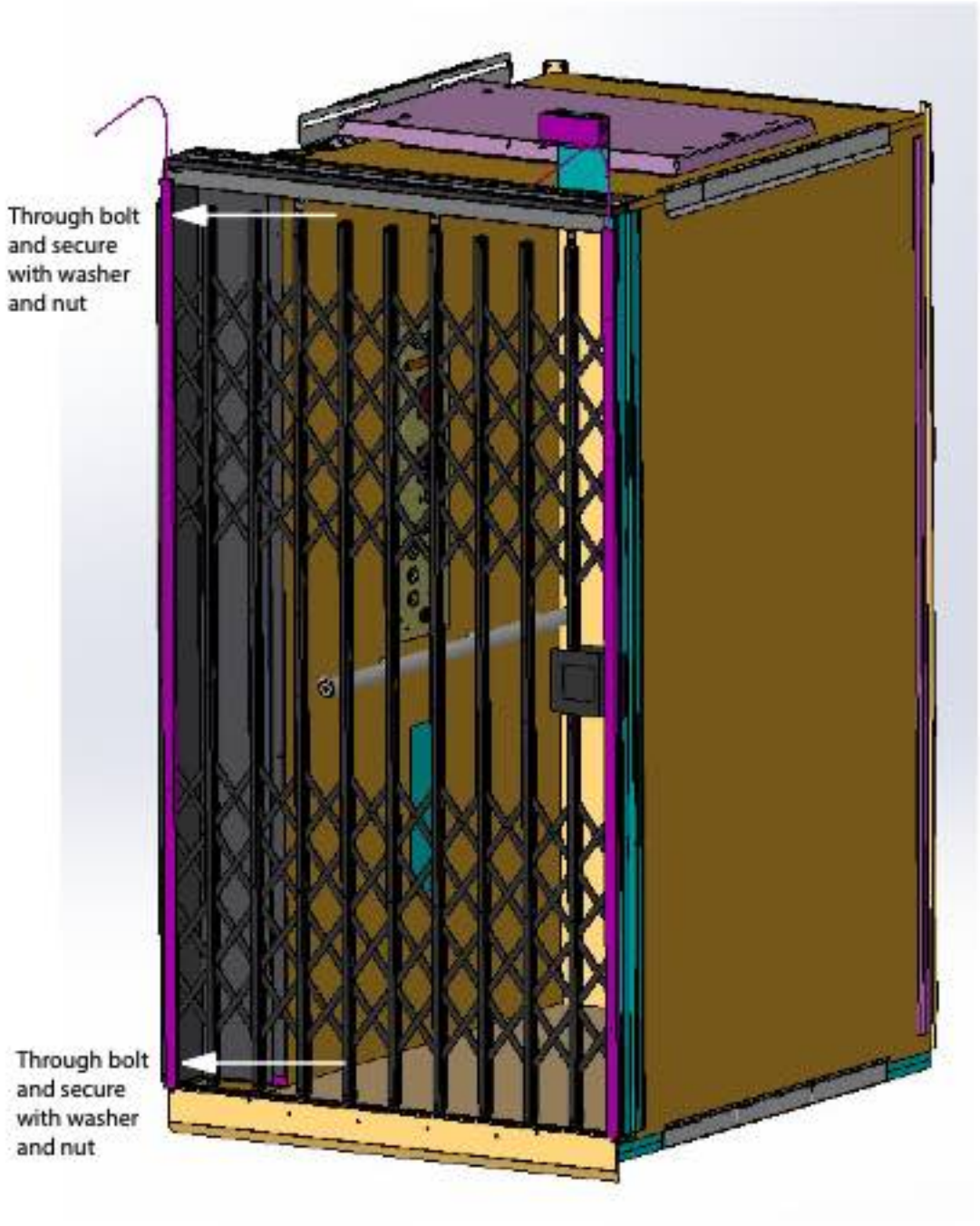

Step 39
Install gate operator

Considerations

If installation includes an automatic gate closer, you'll have either a left-hand or right-hand operator:

- 226142 - left hand (Porta) or 226143 - right hand (Porta)
- 227700-LCHN - left hand (Gatemate) or 227700-RCHN - right hand (Gatemate)

Figure 128
Gate operator right hand

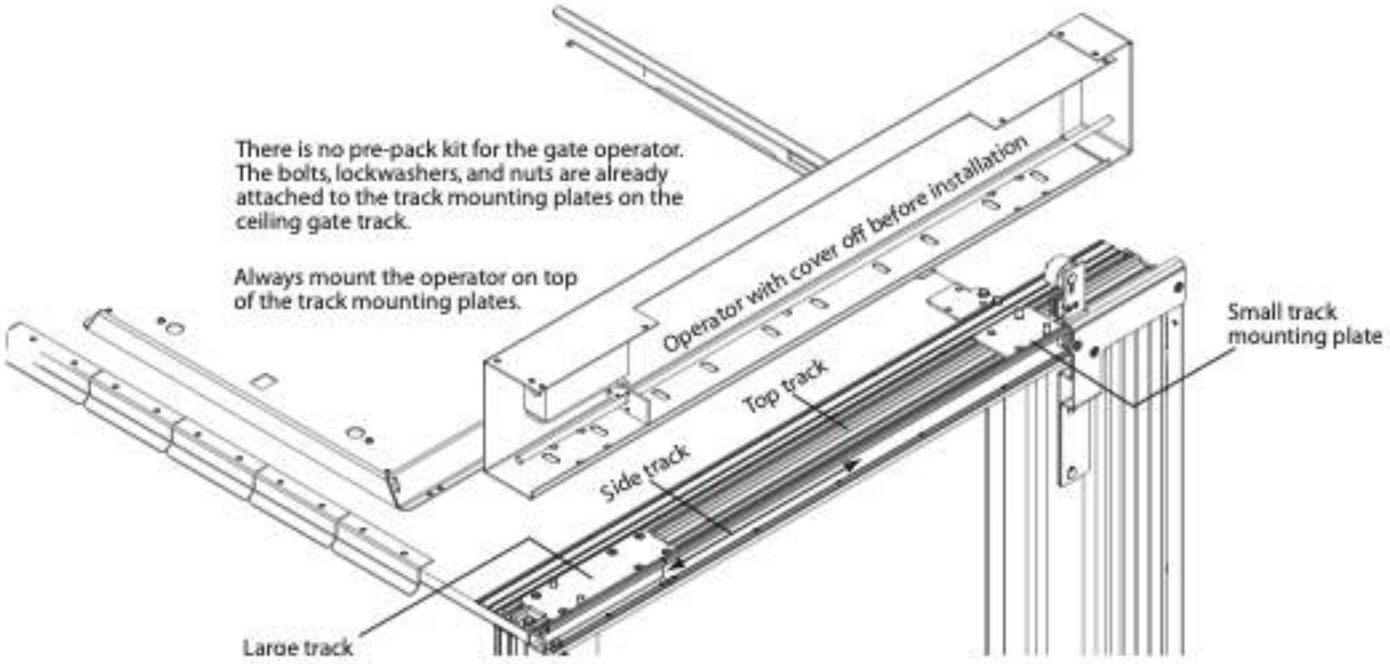

Procedure

1 Ensure the gate can manually slide across the track without friction.
2 Remove the cover from the operator.
Loosen the screws and pull the cover off of the operator body.

Figure 129
Operator cover removal

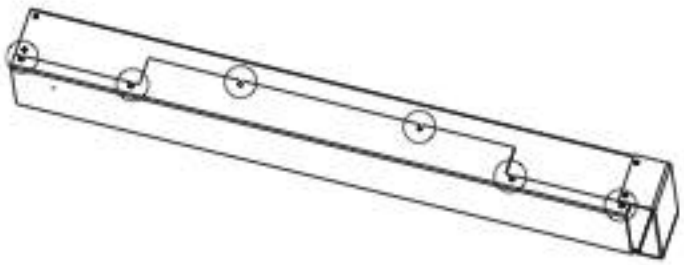

3 Detach the nut and lock washer from the two pem stud bolts on the large and small mounting plates on the cab ceiling track.

Remove with...

4 x $\frac{5}{16}$" hex nut
4 x lock washer

4 Place the operator on the top track through the pem stud bolts and carriage bolts. Ensure the distance from the center of the pem stud bolts to the edge of the track is $3\frac{3}{8}$".

Figure 130
Place operator on track

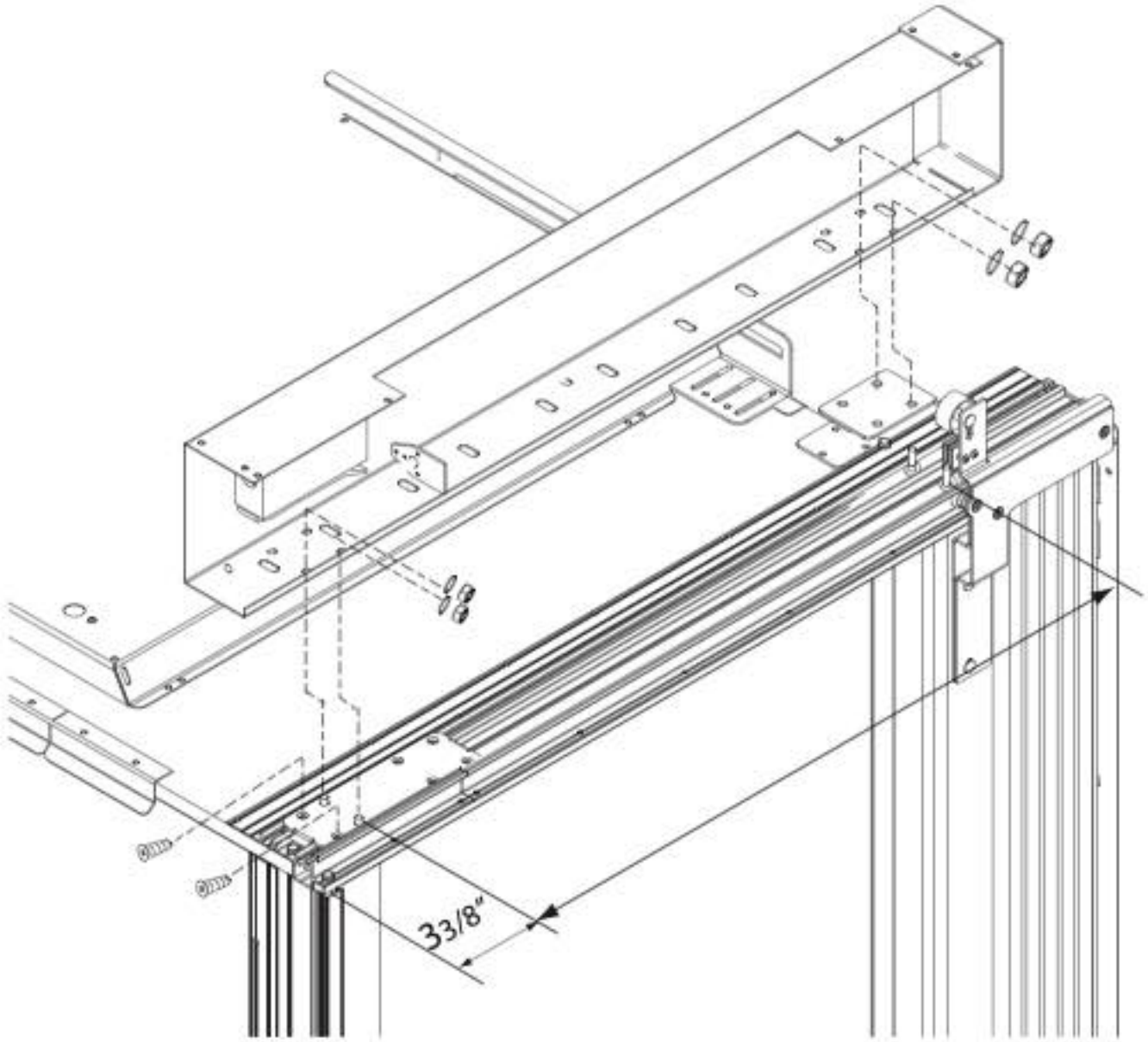

5 Ensure the operator overhangs the slam side of the cab by $\frac{3}{4}$".

Figure 131
Operator overhangs cab

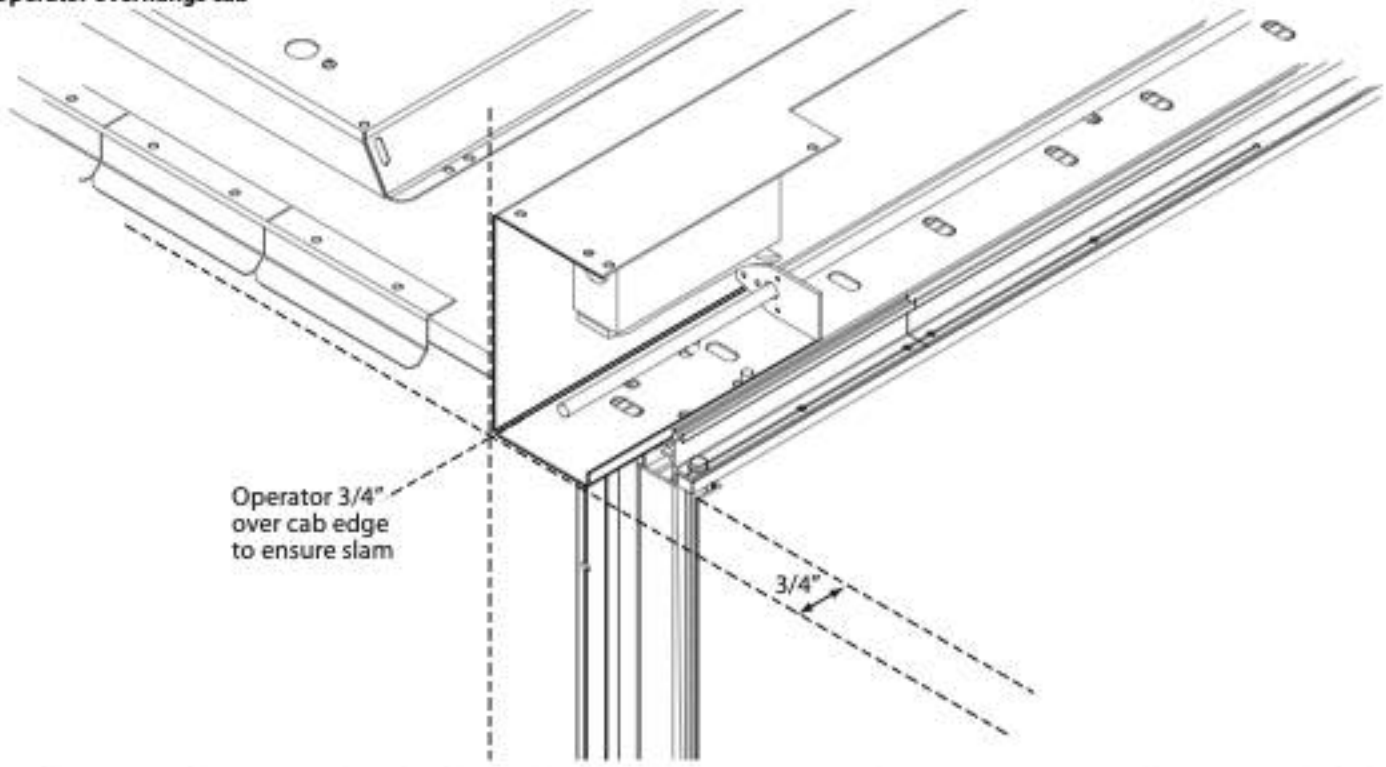

6 If the operator does not overhang the slam side of the track and cab, remove the operator to adjust the large and small track mounting plates as required.

a. Loosen or remove the screws from the large mounting plate.

b. Slide the large mounting plate along the track to adjust.

Figure 132
Large mounting plate adjustment on track

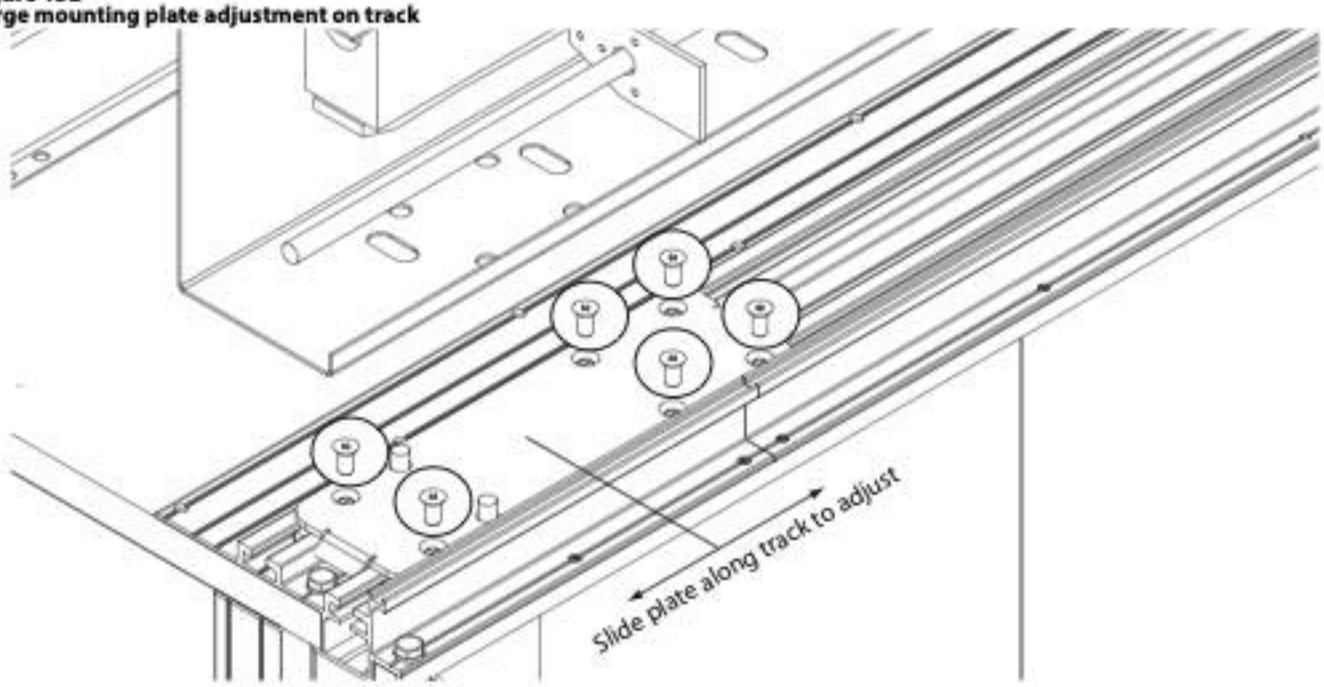

c. If the large mounting plate does not move along the track, remove the plate from the track and slide the pem stud bolt brackets to adjust.

Figure 133
Pem stud brackets

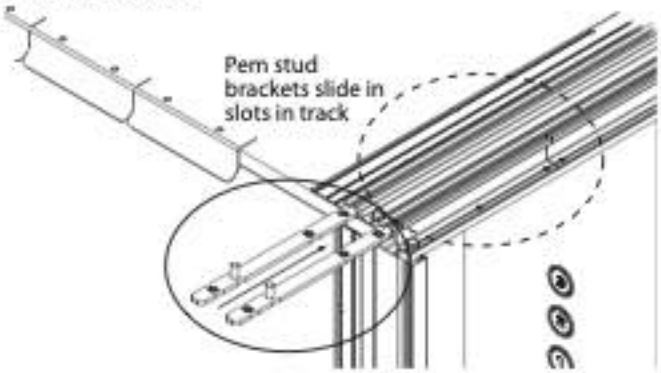

d. Reattach the large mounting plate to the track over the pem stud bolt brackets.

e. Slide the small mounting plate along the track to adjust.

Figure 134
Small mounting plate adjustment on track

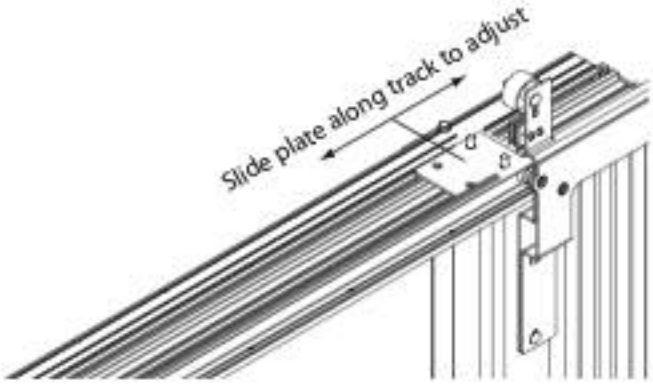

f. Place the operator back on the track and ensure it is flush on the slam side. Refer to Figure 131 on page 63.

7 Tighten the pem stud bolts and carriage bolts with the lock washers and nuts.

8 Attach the floor support bracket 226608 to the cab floor on the gate opening side at the rail once the cab wall assembly is complete.

Figure 135
Floor support bracket

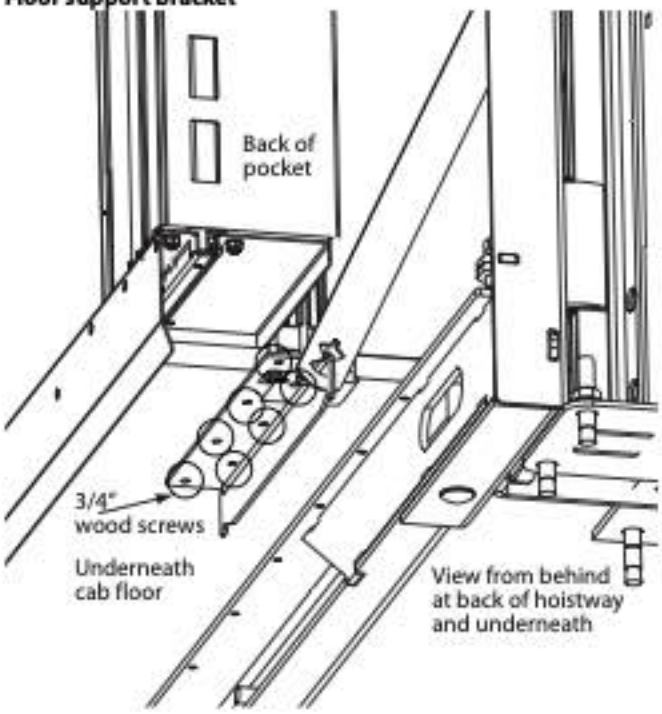

Step 40
Connect gate operator wiring

Wire the operator to the car top box.

Procedure

1 The operator wiring harness feeds through the grommet hole at the back of the operator.

Figure 136
Wires through grommet hole

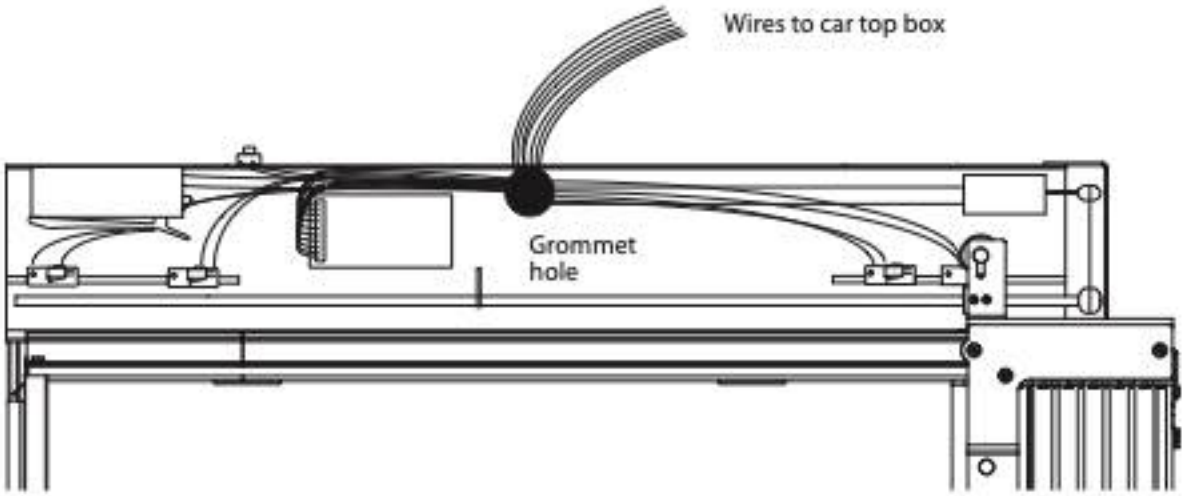

2 Connect the gate operator wires to the car top board at either T18 (for the front operator) or T19 (for the rear operator). *See the Electrical Schematics for more information.*

3 Tie off any extra wire leading from the operator to the car top board.

Step 41
Adjust gate operator board and limit switches

Adjust the operator board and limit switches to allow for gate open and close operation.

Procedure

1 Power on the operator using the power **ON/OFF** switch.

Figure 137
Operator ON / OFF switch

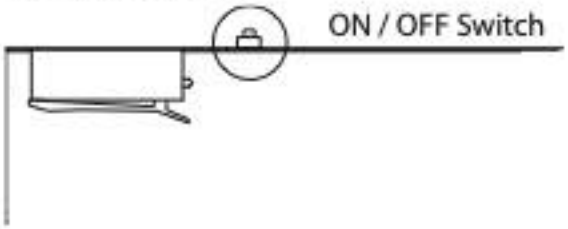

2 Check that the operator board power LED is **ON**.

Figure 138
Operator board Power LED

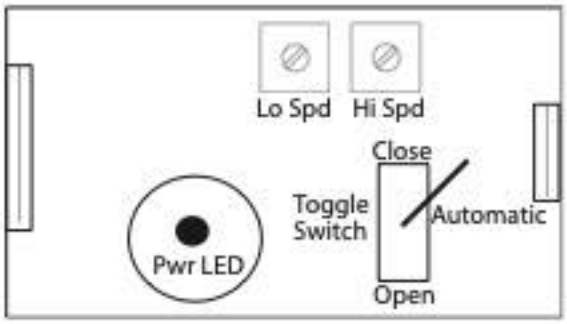

3 Push the gate until the gate stabilizer bar magnets contact the operator plate.

Figure 139
Gate stabilizer magnets contact at operator plate

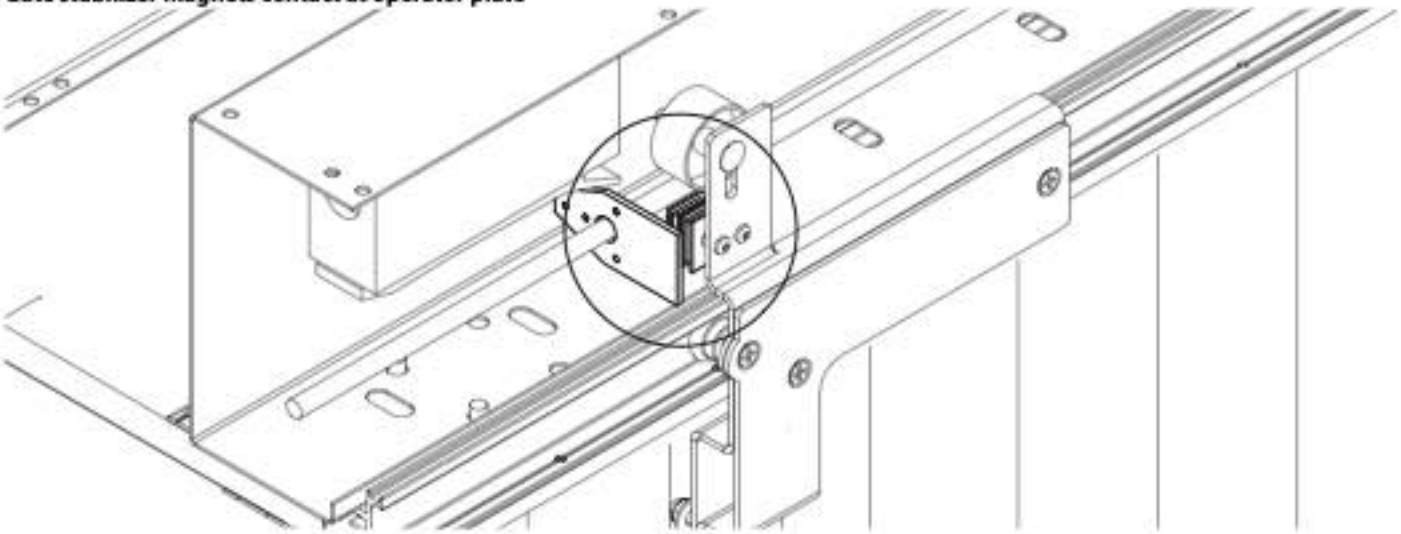

4 Adjust the limit switches (open and close) and the slow speed limit switches. Move the slam side final limit switch so it is vertically flush with the door slam.

Be sure to set the switch contact point (open/close) button so it is flush with the slam.

Figure 140
Final limit switch vertically flush with slam

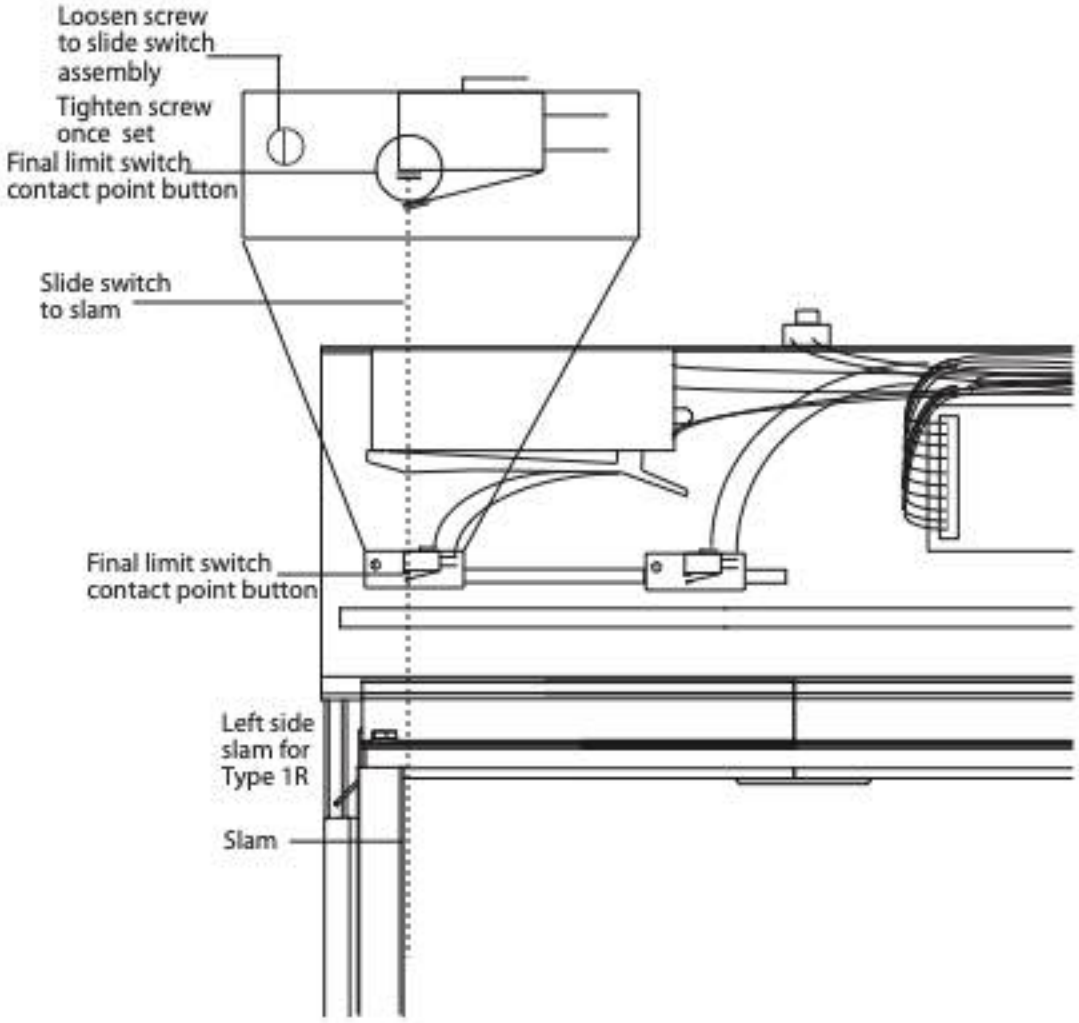

5 Slide the pocket side final limit switch contact point button so it is vertically flush with the wall at the pocket.
Be sure to set the switch contact point (open/close) button so it is flush with the wall at the pocket.

Figure 141
Final limit switch contact point button vertically flush with wall at pocket

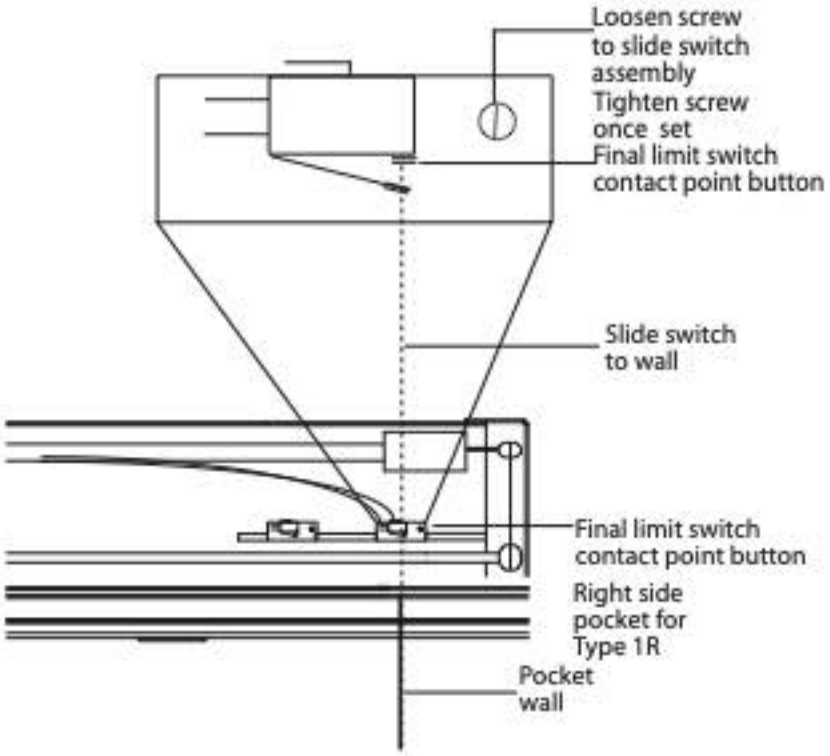

6 Slide the slow limit switches on each side to approximately six inches from the final limit switches.

Figure 142
Slow limit switches

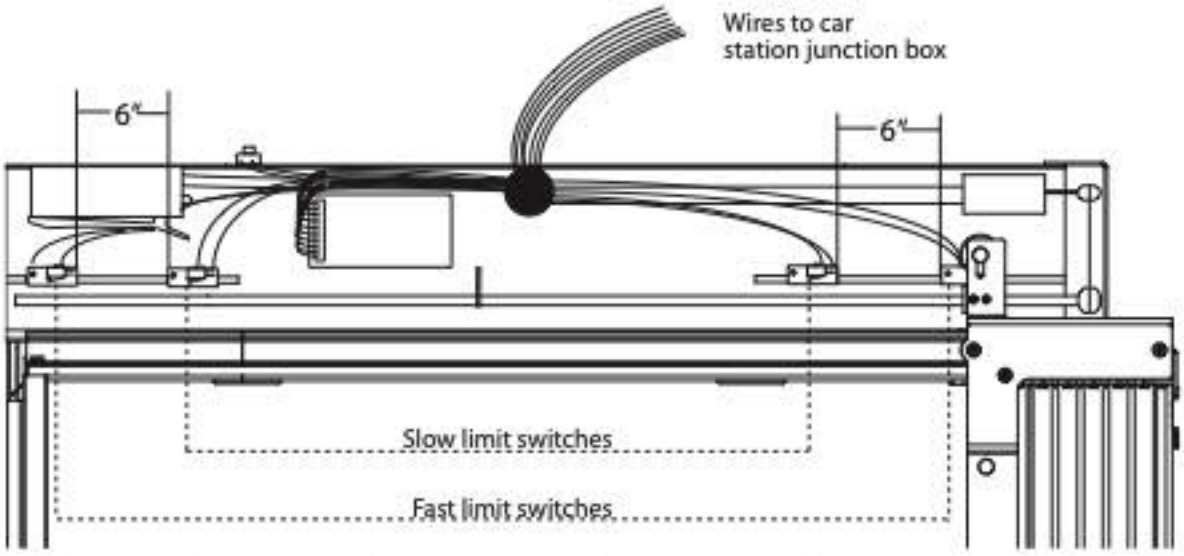

7 Flip the operator board Open/Close/Automatic switch to **CLOSE** to test the gate close into the slam.
The gate should close completely.

8 Flip the operator board Open/Close/Automatic switch to **OPEN** to test the gate open into the pocket.
The gate should open until it is flush with the cab wall at the pocket.

Figure 143
Operator board toggle switch

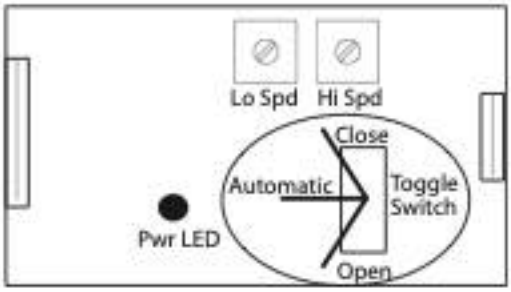

9 Adjust the POTs on the operator board as required for either more or less *high* speed, or more or less *low* speed.

Turning the low speed POT counterclockwise ensures the low speed is slower.
Turning the hi speed POT counterclockwise ensures the high speed is slower.
Turning the low speed POT clockwise ensures the low speed is faster.
Turning the hi speed POT clockwise ensures the high speed is faster.

Figure 144
Operator board POTs

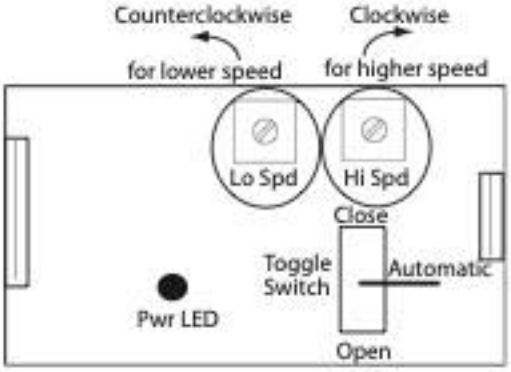

10 Once the *slow-* and *high-* speeds are set with the manual toggles for *open* and *close*, switch to **AUTOMATIC** for normal operation.

11 Run the elevator up and down with the COP buttons to ensure the operator opens and closes the gate correctly in automatic mode.

12 Reinstall the cover.

Figure 145
Operator cover

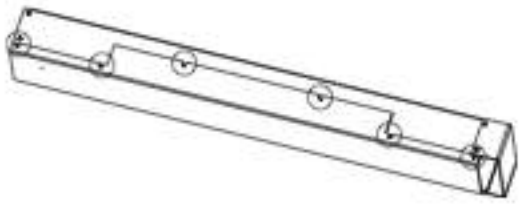

Figure 146
PORTA operator board

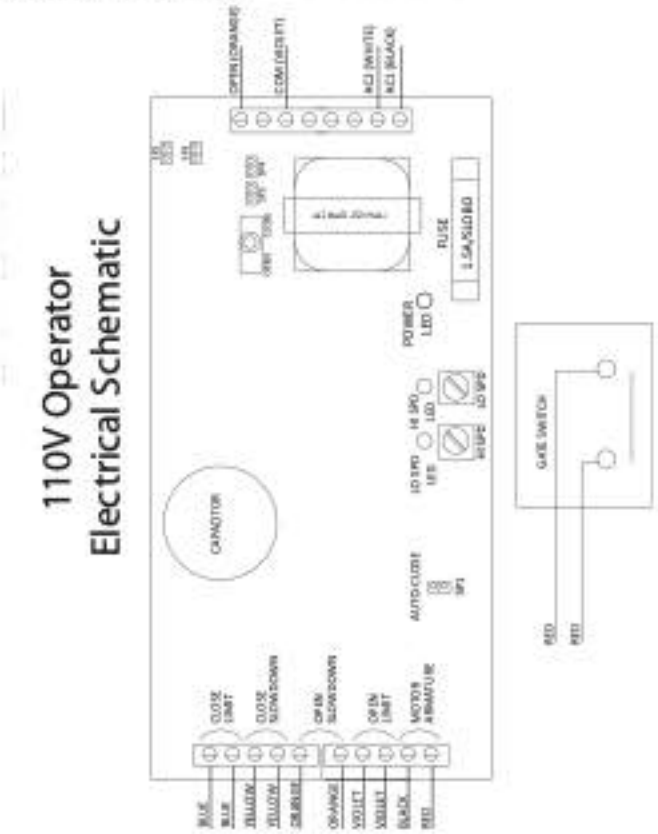

Figure 147
GATEMATE operator board

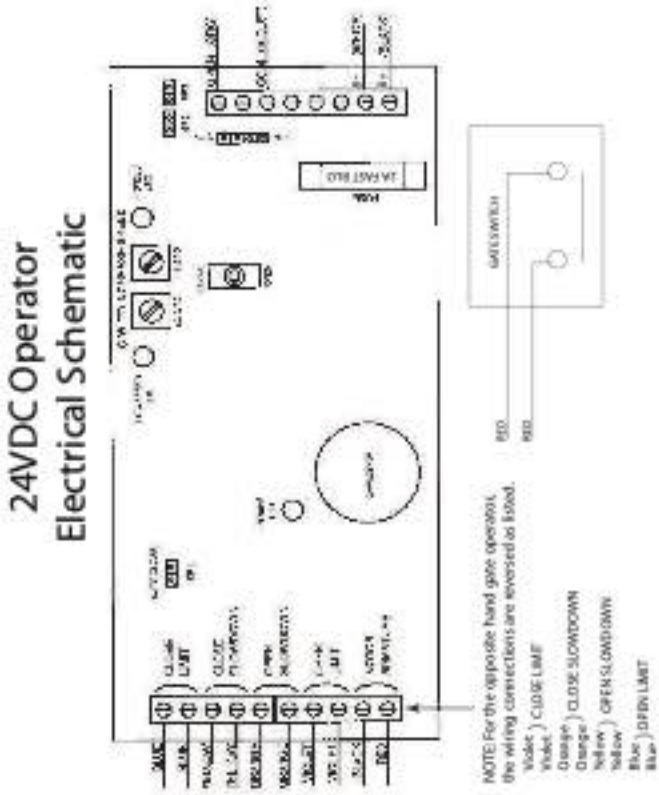

Step 42
Install and wire manual gate switch

Install the gate switch, part no. 106055.

Procedure

1 Detach the nut and lock washer from the one pem stud bolt on the large track mount plate.

Figure 148
Large track mount plate pem studs

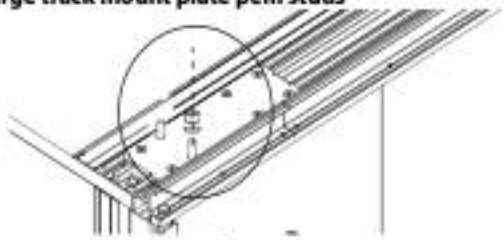

Remove ...

1 x $\frac{5}{16}$" hex nut	1 x lock washer

2 Detach the screw and lock washer from the gate switch.

Figure 149
Screw and lock washer on gate switch

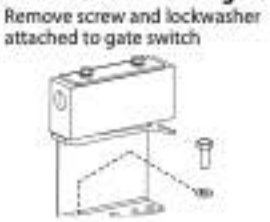

3 Detach the screw from the large track plate.

Figure 150
Large track plate

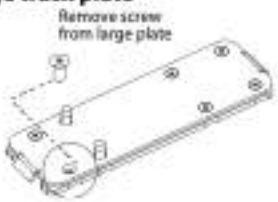

4 Assemble the gate switch to the track.

Figure 151
Gate switch attachment to track

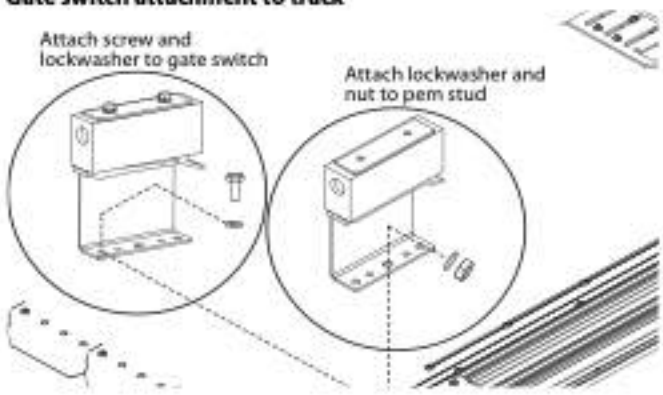

5 Adjust the stabilizer bar roller to ensure contact with the gate switch during door close.

NOTE

Be sure to set up the gate switch so contact is made within 1" of door closure.

Figure 152
Gate stabilizer at gate switch

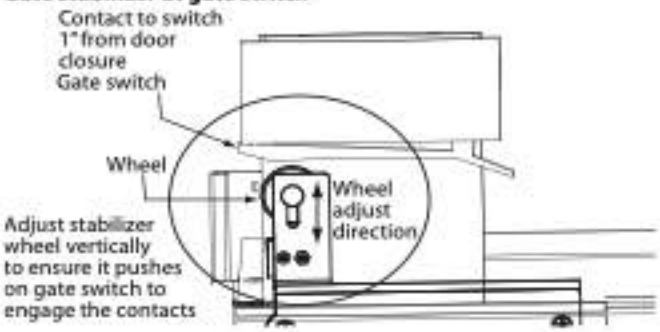

Figure 153
Stabilizer bar adjustment

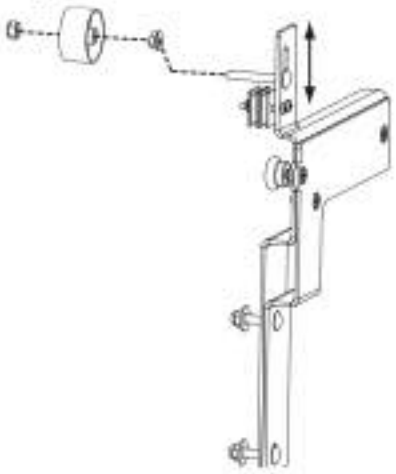

6 Connect manual gate harness part no. 772315 to car top board T18.1 (GS1A) and T18.2 (GS1B) for a front entrance, and to T19.1 (GS2A) and T19.2 (GS2B) for a rear/side entrance. NOTE: If only one manual gate is required, connect a wire jumper in the other connector.

See the Electrical Schematics for more information.

Step 43
Install hands-free phone (if equipped)

Install the hands-free phone (optional).

Procedure

Refer to Figure 154 and Figure 155 on page 72 to install the hands-free phone (if equipped).

1 Remove the cover plate from the speaker grille and place the nuts aside.

Figure 154
Phone junction board J10



2 Remove the H-plate from the microphone mounting studs and place the nuts aside.
3 Mount the speaker grille on the provided studs and fasten in place with the hardware removed in step 1 above.
4 Mount the phone junction board on the provided bracket and standoffs directly over the speaker.
5 Connect the microphone wires (yellow/grey) to the phone junction board terminal block J10.
6 Connect the speaker wires (orange/purple) to the phone junction board terminal block J10.
7 Connect wire PB1 (blue/blue) to the phone junction board terminal block J10 (see Figure 154) and to the alarm button contact block unused N/O slots (qty 2).
8 Locate the black telephone cable and cut off the connector. If required, strip the cable and cut off the black and yellow wires.
9 Connect the pre-terminated end of the black telephone cable (with the standard phone jack connector) to J1 on the phone junction board.
10 Remove the backing and attach the programming keypad to the inside of the COP.
11 Program the phone as described in the next section.

IMPORTANT

Do NOT turn over the elevator prior to having an active phone line and having properly tested the phone or automatic dialer phone (as applicable).

Figure 155
COP with hands-free phone installed

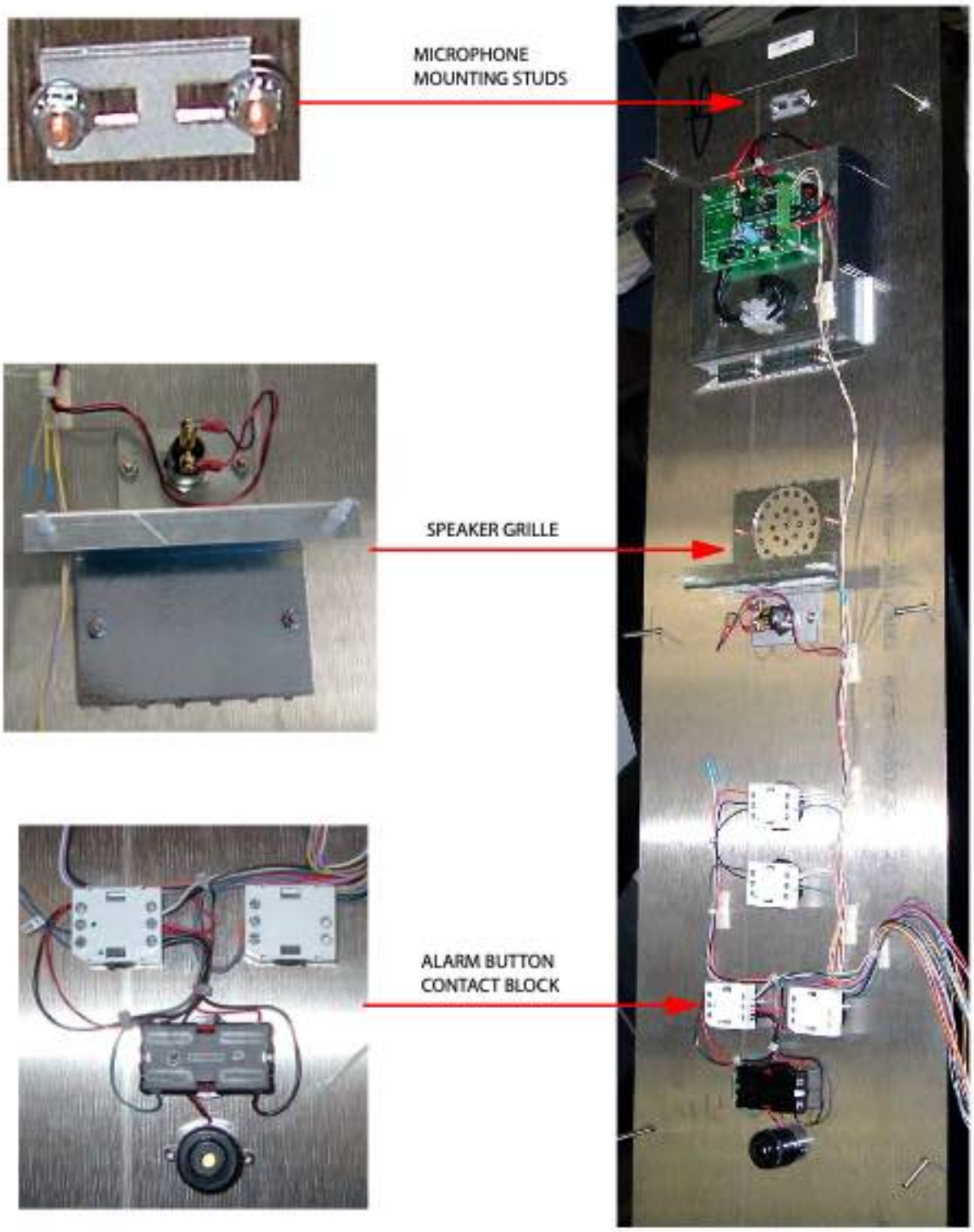

Program Hands-Free Phone (if applicable)

SmartPhone VI description

The purpose of the Rath Microtech SmartPhone VI is to establish emergency contact between a passenger (or passengers) inside an elevator cab and a service person on the outside.

The SmartPhone VI is an ADA-compliant speaker phone that meets all requirements of ADA, ASME A.17 and B44 codes for elevator emergency phones.

NOTE

This phone works with an **analog phone line only**. It will not work with a digital phone line or VOIP phone system.

Requirements and features of the SmartPhone VI include:
Designed for 24 VAC/DC power - separate feed not required; you can tap into the existing car operating panel power

- Fully programmable timer feature can be set from 1 to 999 minutes (will prompt the called party to extend the call every 3 minutes)
- Programmable with up to 5 emergency numbers
- Battery back-up (allows for 4 hours of full operation upon loss of power)
- On-board or remote programming
- Pictorial keypad
- Location message (18 second recordable message)
- Automatic dialer (31 digit programmable memory)
- Fully automated operation
- Automatic answer feature
- Audible ring
- LED (if equipped) lights when phone is activated and flashes when call is received
- Touch tone operation only

Board layout

See Figure 156 for the autodialer board layout.

Figure 156
Auto dialer board layout

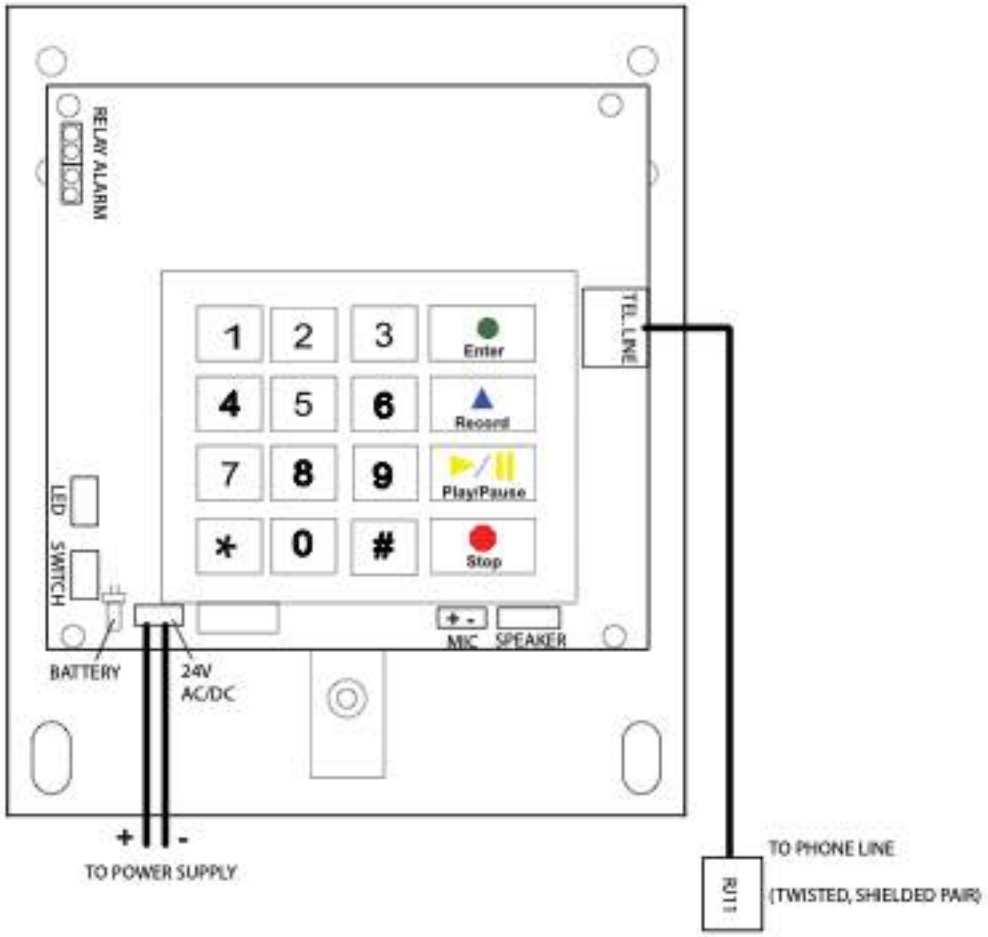

INITIAL SET-UP

1 Check and/or make the following connections to the phone board:
   - 2 black wires to 24V AC/DC power connector on phone board
     (For Prolift, power comes from T9 or T14, pins 1 and 2 on the car station junction board;
     For Orion, power comes from POW and D- on the dupline board)
   - 2 black wires from back-up batteries to BATTERY connector on phone board
   - 2 blue wires from COP alarm pushbutton to SWITCH connector on phone board
   - Red and white wires from COP LED (if equipped) to LED connector on phone board
   - Red and black wires from COP speaker to SPEAKER connector on phone board
   - Red and black wires from COP microphone to MIC connector on phone board
2 Perform the diagnostic test by pressing **Enter, 2, 6, Play/Pause**. The phone will play back 5 beeps as listed below. If any item fails during the test, you will hear a "blat", not a beep. Check the connection and repair as required.
   - 1st beep = External power supply
   - 2nd beep = LED
   - 3rd beep = Microphone
   - 4th beep = Speaker
   - 5th beep = Back-up battery
3 Connect the telephone line between the TEL. LINE jack on the board and a standard RJ11 phone jack.

ON-BOARD PROGRAMMING

1. Begin program mode
Press **Enter**

2. If no dial tone (ring down)
Note: Use this step ONLY if there is no dial tone.
Press **1, 9, Enter, 2**
Note: This will automatically set the timer for 3 minutes.
*Skip the next step.

3. Program emergency numbers
Press **1, Enter, <phone number>, Stop**
Note: Press **2 - 5** *for emergency numbers 2 - 5 as needed.*

4. Program location message
To turn on the message, press **1, 3, Enter, 2**
Press **6, Record, <speak your message>, Stop**
(To replay the message, press **6, Play/Pause**)
To program the frequency of the message, **press 1, 3, Enter,**
1 = Plays the message once
2 = Plays the message twice (default)
3 = Plays the message until the receiving party presses ***** on their phone
For no message, press **1, 3, Enter, 0**

5. Program talk timer
Press **8, Enter, <3-digit number in minutes>**
(Example: 2 minutes = 002)
Note: After the talk timer expires, the phone will prompt the called party to extend the call for 3 minutes.

6. Change phone security code (default 1111)
Press **2, 2, Enter, <desired 4-digit code>**
Note: The security code cannot be 0000.

7. Exit program mode
Press **Stop** for 3 seconds

REMOTE PROGRAMMING

1. Begin program mode
Call into phone
After first simulated ring, press **#, #**
Key in **<security code>** (default is 1111)

2. If no dial tone (ring down)
Note: Use this step ONLY if there is no dial tone.
Press **1, 9, *, 2**
Note: This will automatically set the timer for 3 minutes.
*Skip the next step.

3. Program emergency numbers
Press **1, *, <phone number>, *, #**
Note: Press **2 - 5** *for emergency numbers 2 - 5 as needed.*
For pause, press **#, ***

4. Program location message
To turn on the message, press **1, 3, *, 2**
Press **6, *, <speak your message>, #, *, #**
(To replay the message, press **6, #**)
To program the frequency of the message, **press 1, 3, ***
1 = Plays the message once
2 = Plays the message twice (default)
3 = Plays the message until the receiving party presses ***** on their phone
For no message, press **1, 3, *, 0**

5. Program talk timer
Press **8, *, <3-digit number in minutes>**
(Example: 2 minutes = 002)
Note: After the talk timer expires, the phone will prompt the called party to extend the call for 3 minutes.

7. Exit program mode
Press ***, #, 0** <you will hear beep, beep> ***, #**

Note: The called party can disconnect the call by pressing ***, #**

TROUBLESHOOTING

1 If the phone dials only one digit and hangs up, there is another Autodialer on the line. You need to re-wire the system so that this phone is either in parallel or ahead of it.
2 If the phone dials a couple of digits and gets a busy signal, the phone is installed on a switchboard line and needs to be programmed to dial the appropriate access code to get an outside line (usually 9).
3 If the phone does not respond, make sure the green LED (D1) on the board is ON. If not, check to make sure the power is connected properly.

Step 44
Install hall calls

Install the hall calls.

Considerations

If the doors and walls are under construction, temporarily attach the hall calls to the hoistway to ensure that you can test operation; otherwise, jump the hall calls on the main controller board to ensure you can test operation.

Be sure to secure all wiring on the sling. Attempt to secure the wires in such a way that you can remove individual wire connections if required —this method can save maintenance time at a later date.

Procedure

1 Attach the hall calls temporarily to the hoistway wall if door walls are not yet suitably built out.

Figure 157
Hall call

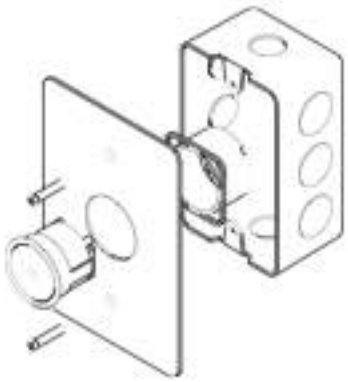

2 Connect each hall landing station harness to the appropriate connector on the main controller board per the *Electrical Schematics*.

3 IMPORTANT: Be sure to connect a 14 AWG green ground wire (not provided) from the screw on the back of the hall call metal box to the ground bar in the controller.

4 Jump any floor on the main controller board that does not require a hall call.

5 Connect the hall station position indicator (PI) harness from J11 on the controller board to the 1st floor PI board. Then wire from the 1st floor PI board to the 2nd floor PI board, from the 2nd floor PI board to the 3rd floor PI board, and so on up to the 6th floor.

Step 45
Interlock installation

Refer to the appropriate *Residential Elevator Lock Installation Guide* for information on how to install a door interlock.

NOTE

Ensure the hoistway door meets the 3/4" & 4" rule as shown in the ASME A17.1 / CSA B44 Code, Section 5.3.1.8.3.
For more information, please consult the *Residential Elevator Lock Installation Guide (3/4&4 Rule), P/N 001286.*

Step 46
Program COP position indicator (if required)

Program the car operating panel position indicator as necessary. The LCD position indicator (PI) is programmable using the on-board DIP switches and push buttons (shown in Figure 159).

Figure 158
COP position indicator



Figure 159
COP position indicator board



SW2 settings

1	2	Function
OFF	X	Operating mode or setting mode
ON	OFF	Self-testing 1
ON	ON	Self-testing 2
X	ON	Logo **Savaria** displaying in operating mode

Self-testing 1

1 Floor information, icon, arrow, and arrival gong testing
2 8 inputs and display

Input	A	B	C	D	E	F	G	H
Display	D1	D2	D3	D4	D5	D6	D7	D8

3 DIP switches SW1 and SW2, and display

Switch Position	SW1.1	SW1.2	SW1.3	SW1.4	SW1.5	SW1.6	SW1.7	SW1.8	SW2.1	SW2.2
Display	S1	S2	S3	S4	S5	S6	S7	S8	S9	SA

Self-testing 2

1 Scan each segment and icon of LCD
2 Scan floor information and character

NOTE: Settings will be effective after restarting power-on.

SW1: 8-position DIP switch settings

Use DIP switch SW1.1 through SW1.4 to program the floor (see table on page 78)

Push-button switches for setting up and saving display information

1 **UP**: Press to scroll upwards through the characters
2 **DN**: Press to scroll downwards through the characters
3 **SAV**: Press to step from 10's, to 1's, to timing during floor programming procedure

Volume adjustment of arrival gong via VR1

- Increase volume by turning VR1 clockwise; decrease volume by turning VR1 counter-clockwise
- Single gong for UP direction; double gong for DOWN direction
- The default volume of arrival gong is set to 60 dB

LCD icons

Out of order

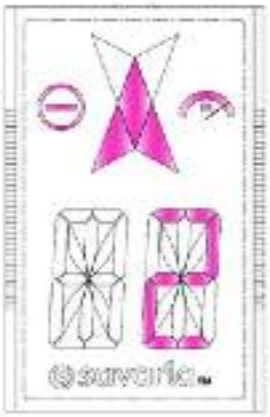

Full on/Full off

Savaria logo

- **Out of order**: Symbol is displayed when elevator is out of order. Normally, symbol is not displayed.
- **Full on/Full off**: Symbol is displayed when elevator overloads. Normally, symbol is not displayed.
- **Savaria logo**: Normally, the logo is displayed.

Floor programming procedure

1 Set DIP switch SW1, positions 1 through 4 to select the floor to program (see the table below).

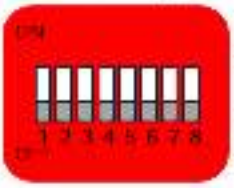

Note:
DIP Switch 5 to 8 not used

All switches are normally in OFF position

Floor being programmed	DIP Switches (1, 2, 3...)	Selector Signals
1	1	P1
2	2	P2
3	1, 2	P1, P2
4	3	P3
5	1, 3	P1, P3
6	2, 3	P2, P3

Note:
The DIP Switches that are turned on mimic the selector lights that are on for that given floor.

Please ensure you are getting the correct selector lights for each floor or else your COP will not program correctly and will show the wrong letter/number.

Check both controller and Car Top Board (if applicable).

2 Press and hold SAV for 3 seconds until the character in the LCD display is blinking. The 1's digit should be blinking. NOTE: The 10's digit display should be set to "Blank" for single digit use.

3 Press UP or DN to scroll upwards or downwards through the numbers/letters.

4 When the desired number or letter is selected, press SAV once. The 10's digit should now be blinking.

5 Press UP or DN to scroll upwards or downwards through the letters/numbers. When the desired number or letter is selected, press SAV once. You will now see T2 or T#.

6 Press SAV once again, your floor display that you programmed will now be blinking. Press and hold SAV button for 5 – 10 seconds. Your display should stop blinking.

7 The floor setting is programmed.

8 Turn off the DIP switches SW1 turned on in step 1.

9 Repeat the above steps 1 through 7 for each floor to be modified.

NOTE

Programming has a timer lockout. If timer expires mid-programming, user will be booted back to the start. It is advised to program each floor one at a time, and ensuring it is saved before programming the next floor.

To set Time Delay:

1 Set the time delay (default is T2: 100ms):

a. Press and hold SAV for 3 seconds until the character in the LCD display is blinking.

b. Press SAV until 'T' is displayed in the 10's digit display.

c. Use the UP/DN buttons to set the time delay value in the 1's digit display, T0 through TF per the table below

Setting	Time Delay (ms)
T0	0
T1	50
T2	100
T3	150
T4	175
T5	200
T6	225
T7	250
T8	275
T9	300
TA	325
TB	350
TC	500
TD	600
TE	800
TF	1000

- When you have the correct time delay setting, press SAV until the display stops blinking and remains solid.
- The time delay is programmed.

NOTE: The Savaria logo will remain off until the power is cycled OFF then ON.

Step 47
Manual Lowering Clutch System Installation

A system with an auxiliary gear motor coupled with an electrical clutch, is assembled from the factory to the shaft of the main motor of the elevator with a synchronous belt. The belt tension is set from the factory, there is no need to adjust.

Figure 160

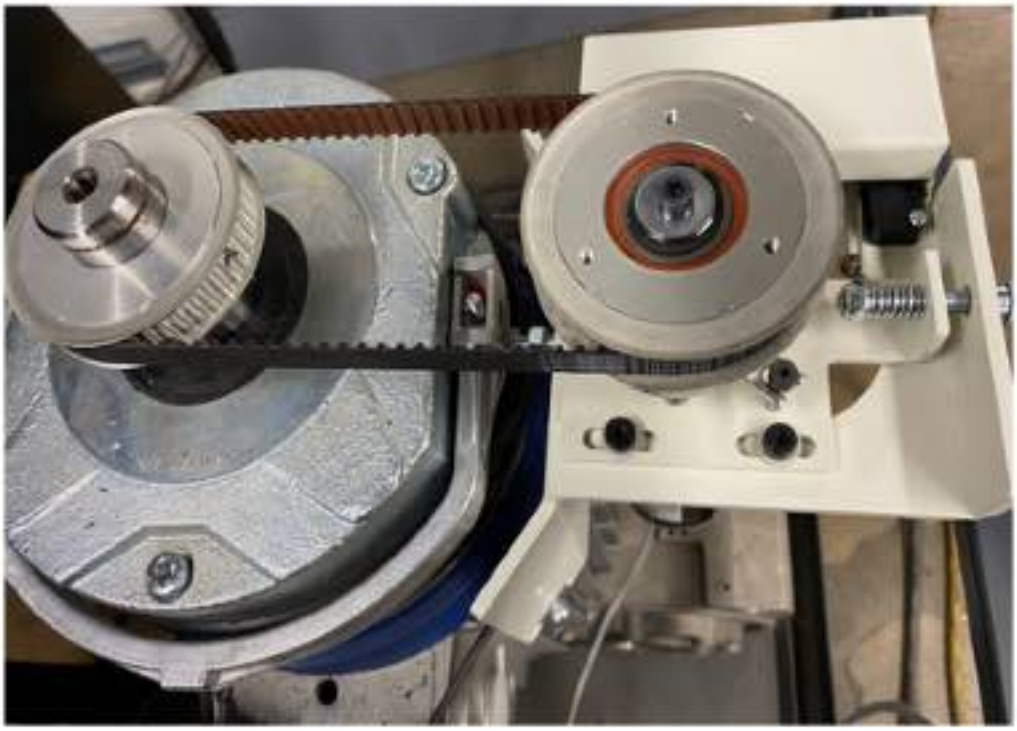

1 Connect the cable that was installed in the electrical box in step 24, harness 252826-ZEN, to the emergency lowering system. Follow electrical schematics.

Procedure:

1 Remove the cover from the manual lowering electrical box located at the bottom landing.

2 Connect the emergency lowering pendant to the two connectors inside the box. Test the system following the procedure provided in the Zenith Owner's Manual.

When the COM and DW buttons are pressed the clutch connects the auxiliary gearmotor to the pulleys/synchronous belt system connected to the main motor of the elevator. The auxiliary gearmotor is energized rotating the shaft of the main motor of the elevator, causing the cabin to move down.

3 IIf any noise is created by the manual lowering system, check the tension on the belt using a pencil tension tester. Use a straight edge across the belt, place the tool in the center and push. The force on the pencil must be 2 lb under a displacement of 0.1". A video is available on how to use the tool: https://www.youtube.com/watch?v=JRGkh5sUQXE The recommended pencil tension tester is: Brand: Gates, Product # 74010076

Figure 161

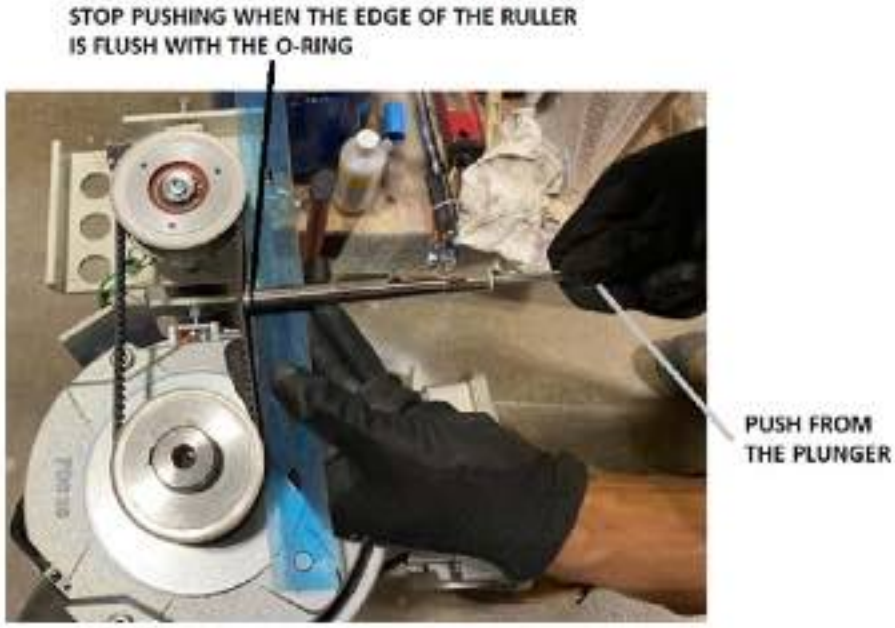

Also, ensure the brake on the main motor is energized (brake releases the shaft of the motor) when the buttons on the pendant are pressed.

4 When complete, disconnect the pendant and put the cover back on the electrical box. Ensure the pendant is placed in a know location for the owner.

Figure 162



Figure 163

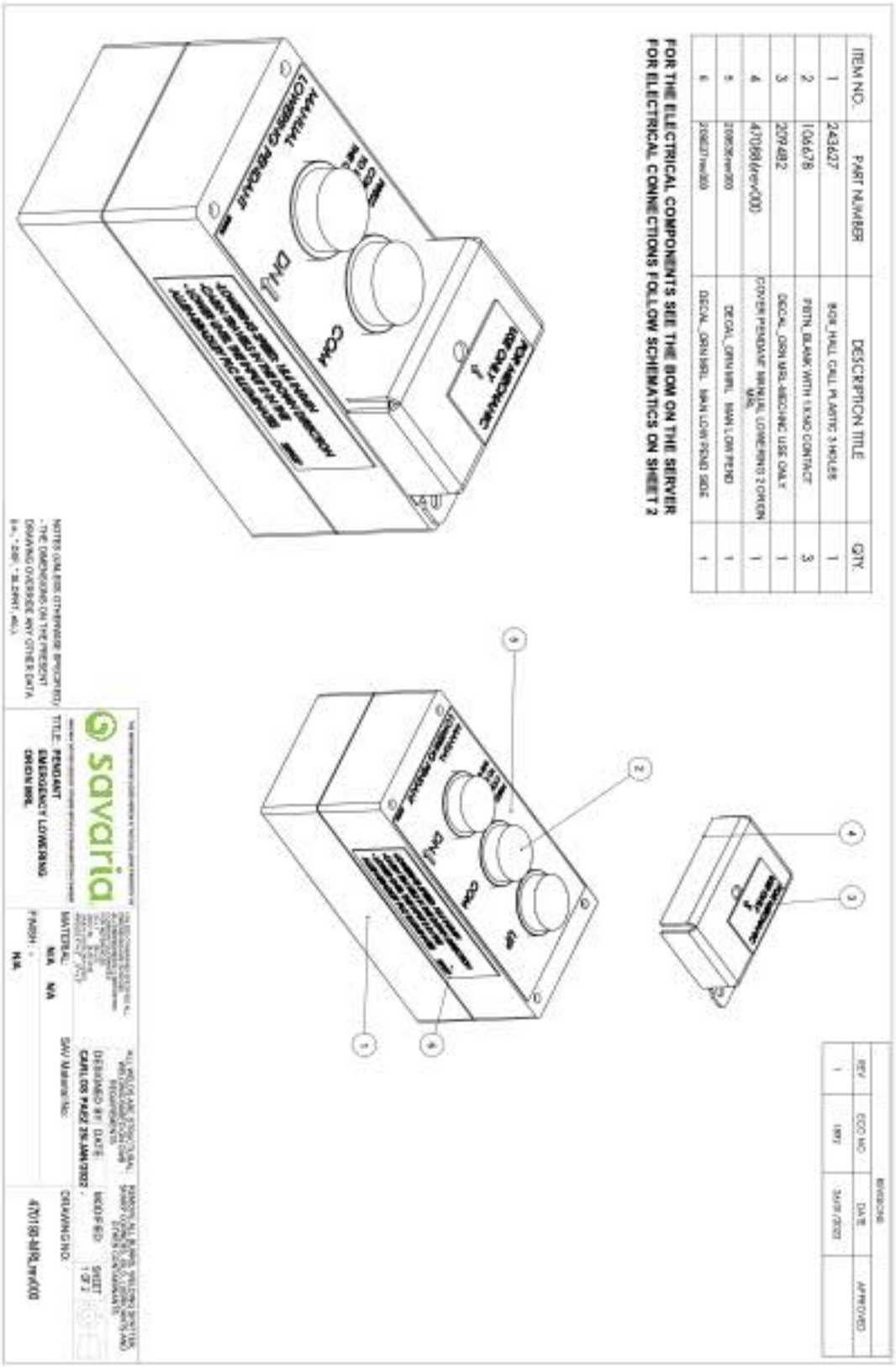
ITEM NO.
PART NUMBER
DESCRIPTION TITLE
QTY.
1
243627
BGR_HALL CALL PLASTIC 3 HOLES
1
2
106678
PBTN_BLANK WITH 1X3/0 CONTACT
3
3
209482
DECAL_ORN MRL-MECHNC USE ONLY
1
4
470188(rev000)
COVER PENDANT MANUAL LOWERING 2 ORION MRL
1
5
DECAL_ORN MRL MAN LOW PEND
1
6
DECAL_ORN MRL MAN LOW PEND SIDE
1
FOR THE ELECTRICAL COMPONENTS SEE THE BOM ON THE SERVER
FOR ELECTRICAL CONNECTIONS FOLLOW SCHEMATICS ON SHEET 2
MANUAL LOWERING PENDANT
FOR MECHANIC USE ONLY
DN
COM
savaria
TITLE: PENDANT EMERGENCY LOWERING ORION MRL
MATERIAL: N/A N/A
FINISH: N/A
DESIGNED BY: DATE
CARLOS PAEZ 28-JAN-2002
SAV Material No.
DRAWING NO.
470188-MRLrev000
REVISIONS
REV
ECO NO
DATE
APPROVED
1
MRL
24/01/2002

Figure 164

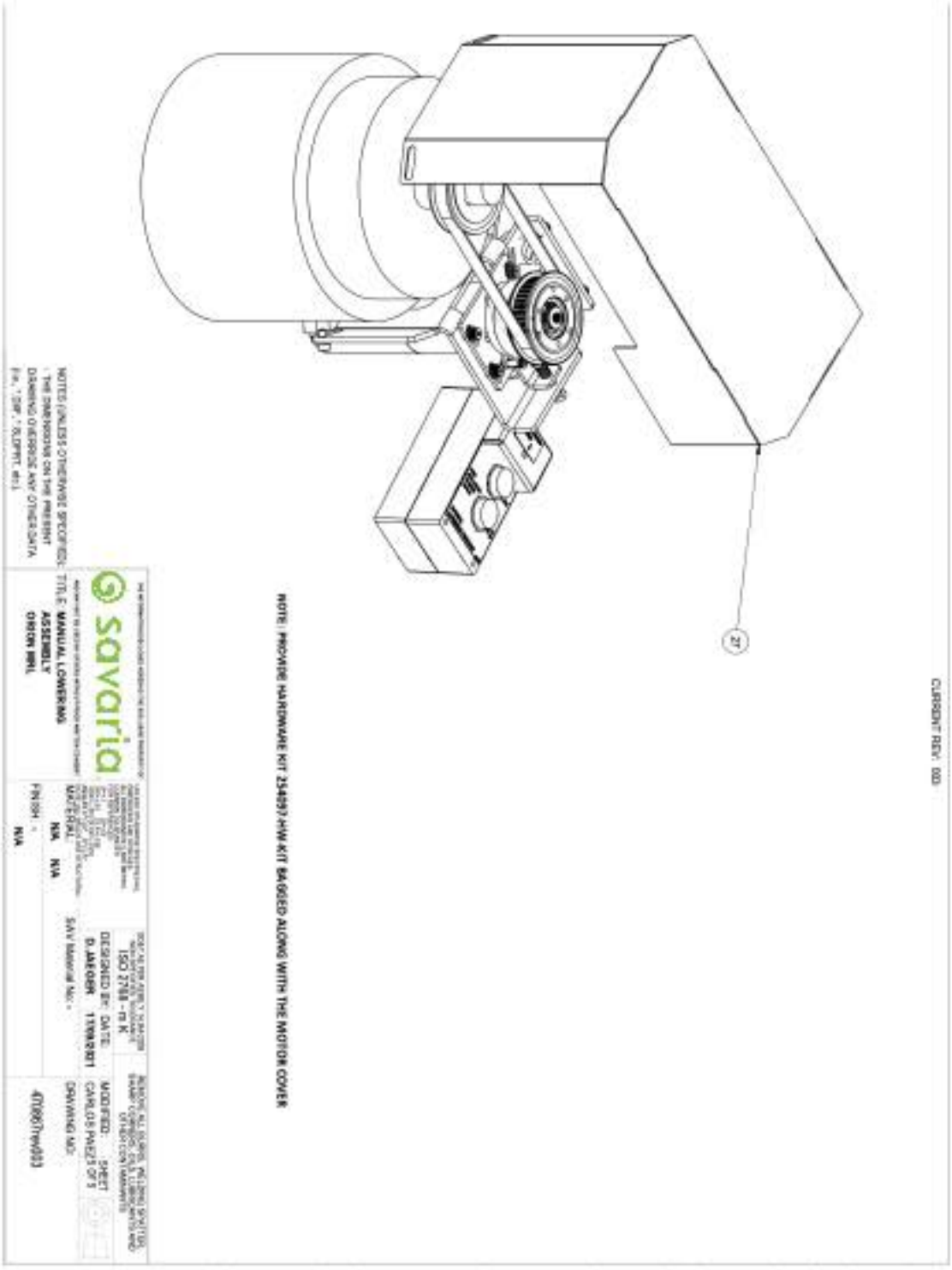

5 Attach the cover to the manual lowering clutch system, and secure in place with the provided hardware kit

Step 48
Test elevator operation

Voltage Adjustment
Once wiring is complete and the unit is operational, turn the voltage on the power supply up so the voltage output is 27 VDC minimum, 28 VDC maximum.

Figure 165
Voltage adjustment



The following features must be verified as operational **before** the elevator can be released to the customer.

⚠ WARNING

To avoid personal injury, never stand directly under the cab or inside the hoistway during testing.

Cab Key Switch (Optional)
Verify that when the key is in the OFF position, the buttons on the cab station are inoperable. When turned ON, the landing buttons should be inoperable.

Call Controls
Verify that controls are inoperable whenever a landing door or the cab gate is left in the open position, or when the key switch is in the OFF position.

Emergency Car Stop Button
Verify that turning the stop key to the STOP position, stops the elevator from running and stops the doors from moving.

Door Interlock
Verify the following:

1 **Door Switch:** Verify that when the door is left open, the car will not run in any direction from any station. Check all controls at all stations.

2 **Lock:** Verify that the door is locked after 2 inches of movement away from the landing. If necessary, adjust the cam accordingly.

3 **Cab Panel-fold Gate:** Verify that all controls are inoperable if the gate is left in the open position.

4 **Light Curtain:** Verify that the Red LED is ON (static door frame side) when obstructed. Refer to the section "Install light screens" on page 47.

Pit Switch, Car Top Stop Switch, Overspeed Governor, Plank Switch, Final Limit Switch
Turning all switches to the OFF position should render all controls inoperable.

Emergency Light
Verify that the emergency light comes on anytime that the 110 volt power to the equipment is interrupted.

Emergency Lowering
Verify that when the power to the elevator (both 110 volt and 220 volts) is disconnected, the DOWN button controls in the cab remain operable allowing the cab to operate in the DOWN direction only.

Cab Telephone (Option)
Verify that the cab telephone is operable.

Traveling Cable
Make sure that the traveling cable is running free and clear from all obstructions while the cab travels to all floors being served.

Confirm upper overtravel

⚠ WARNING

Before entering the pit area you MUST raise the pit prop to its fully upright position and lock it in place using the safety latch.

To confirm the upper overtravel, first position the cab level at the top landing.

Enter the pit area (see the WARNING above) and measure the distance between the underside of the counterweight carriage and the top of the counterweight buffers. This distance should be a maximum of 2" (51 mm).

Step 49
Perform safety test

Tools and materials

- Bottle jack rated for 2000 lbs
- 4 by 4 wood post approximately 6 feet high (ensure the 4 by 4 post is tall enough so you can leave the pit shoring block in place while you perform the test)
- 4 by 4 deck support to hold the 4 by 4 post in place (see Figure 166)

Figure 166
4 by 4 deck support



Procedure

⚠ WARNING

Ensure there is no-one in the hoistway!
NEVER enter the hoistway at any time during this test.

NOTE

Ensure the pit shoring block is in place while you perform the test.

1 Screw the above deck support to a 2 foot by 2 foot, ¾-inch piece of support plywood to keep the 4 by 4 post from falling.
2 Use the temp run buttons with the controller in temp mode.
3 Position the car 6 - 7 feet above the pit floor.
4 Place the deck support in the pit under the car sling, closest to the landing door/tower. Cut the 4 by 4 post to a height at which the post with bottle jack can lift the sling.
5 Place the 4 by 4 wood post inside the deck support.
6 Screw the bottle jack to the top of the 4 by 4 post to prevent bottle jack from falling.
7 Using the installation chain hoist, lower the car (lift the counterweights) until the car is just above the compressed bottle jack.
8 With the chain hoist supporting the counterweights, use the bottle jack to lift the cab sling to the point where the ropes are loose engaging the safeties.
9 Ensure you have 4 or 5 inches of slack rope between the sling and traction sheave.
10 From the landing, quickly release the bottle jack. The cab should lower approximately ½ inch and the brakes should hold the cab with the ropes still loose confirming the slack rope device is working properly.
11 Lower the chain hoist to re-apply tension to the ropes. Stow the winch end to the pit.
12 Install a temporary slack rope cheater on the main controller board between 1X and 24V.
13 Use the temp run buttons to run the cab up 2 inches to release the slack rope safeties and reset the slack rope switch.
14 Remove the cheater from 1X and 24V on the main controller board.
15 Remove the bottle jack, deck support and post so the pit is clear.
16 Close all doors, reset the power and confirm the lift runs in leveling speed to the lower terminal resetting the controller.

Step 50
Perform counterweight safety test and reset (if applicable)

Counterweight safety test

1 Place sufficient bracing (for example, a 4x4) under the cab and then lower the sling onto the bracing.

Figure 167
Bracing under cab



2 Place a car or bottle-jack with a 4x4 cut to length under the counterweight assembly.

Figure 168
Jack under counterweight assembly



3 Jack the counterweight assembly up so that the ropes go slack. Once the ropes are slack, mark the top of the counterweight safety block on the rail.

Figure 169
Mark top of safety block



4 Release the jack as fast as possible. The counterweight safety brakes should engage.

5 Record the distance from the top of the counterweight safety block to the mark previously made. This distance must be less than 1/2". If it is not, follow the reset procedure and then adjust the guide shoes and retest.

Figure 170
Distance from top of counterweight safety block to mark



Reset counterweight safeties

1 Jack up the counterweight assembly while the cab is still braced in place. This will take pressure off the counterweight safety brakes.

2 Loosen the 4 collars on the safety bar and slide it out from each of the safety brakes.

Figure 171
Slide bar out of safety arm



3 Once the brake arm is free, push it back up to the disengaged position.

4 Carefully lower the counterweight assembly with the safety bar disengaged from both safety brakes.

5 Once tension is back on the ropes, re-engage the safety bar in both brake arms and secure the collars.

6 Once tension is back on the ropes, re-engage the safety bar in both brake arms and secure the collars.

- **NOTE**: Make sure that the ropes align back into their corresponding pulley grooves.
- **NOTE**: Be sure to install the cotter pins at both ends of the bar.

Figure 172
Secure collars on counterweight safety bar



Step 51
Perform OSG inertia test

Perform the following steps with the car approximately 6 feet above the bottom landing so slack rope can be reset.

1 Enter the pit (follow the proper procedure to ensure safety).

2 On the 1/4" overspeed cable closet to the T-rails and not attached to the car sling, attach 2 Crosby clamps approximately 6" apart.

3 Attach a rope or nylon strap or wire ties above each clamp to form a loop of approximately 6".

4 Hang a 50lb weight from this loop.

Figure 173
OSG inertia test setup



5 Exit the pit so you can run the lift.

6 Enter a call to run the lift in the down direction.

7 The safeties should engage upon start-up of the car in the down direction simulating the OSG tripped.

8 Reset the slack rope switch if tripped. If the car safety has engaged, put the bypass switches on the main board down for "on bypass" and lift the refuge prop to the inspect position. Access the car top to run the car up 1-2" to reset the safety.

9 Re-enter the pit and remove all devices from the OSG rope. Reset the rope brake and return the car top/pit/ bypass switches to normal.

10 Reset the controller using a tablet or the reset key. Confirm the elevator runs on normal to all floors.

Step 52
Before leaving job site

Before leaving the job site, perform the following procedures:

- Confirm the cab is heaver than the counterweight assembly
- Install the counterweight rod and plate to clamp the counterweights in place
- Make sure the work area is clean and the elevator is safe and operational

Confirm cab is heaver than counterweight assembly

Perform the following steps upon completion of cab assembly and once the flooring is complete. (If the flooring is not complete, confirm the floor weight and add this to the cab for the balance test.)

1 Between landings, run the car in fast speed in the up and down direction.
2 Car running up should always be 0.01 - 0.04 average amps more than down.
3 To see amps on a Mitsubishi drive, push the SET button once; display should read 0.00A.
4 Add or remove weight as required until the car running up has a higher current than the car running down.

Install threaded rod and plate to clamp counterweights in place

1 Insert the threaded rod up through the bottom of the counterweights, installing a spring washer and split nut (from the kit below) on the bottom of the rod.

470200-HW, Counterweight Hardware Kit	
1/2"-13 NUT	101106
1/2"-13 SPLIT NUT	105655
1/2" SPRING WASHER	102193

2 Position the plate on top of the counterweight stack so it lines up with the slots in the counterweights. Feed the rod up through the plate and install another spring washer and captive nut on the rod to hold the plate in place (use hardware from the kit above).
3 Continue feeding the threaded rod up through the hole in the top of the counterweight carriage and install another spring washer and nut from the kit above to secure the rod in place.

Figure 174:

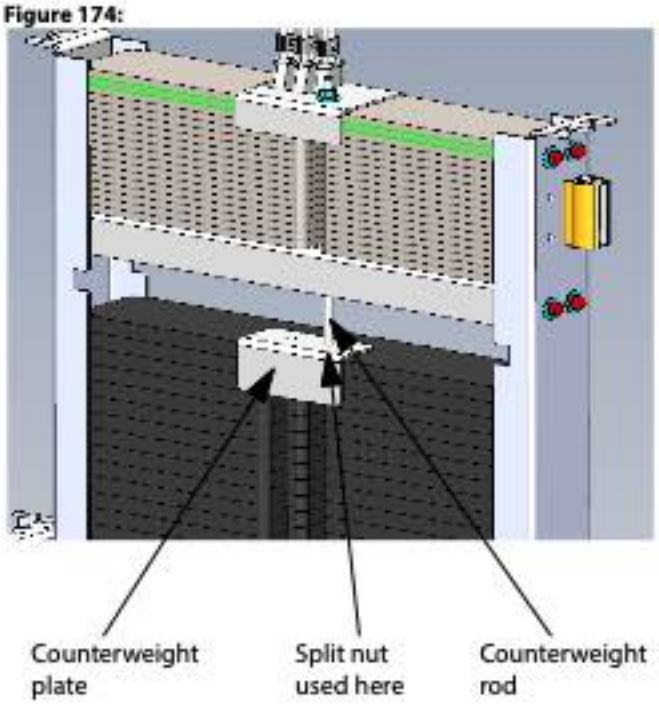

Make sure work area is clean and elevator is safe and operational

1 Clean up the work area.
2 Make sure all hardware has been tightened.
3 Make sure all controls operate properly.
4 Ensure the motor brake is working freely and engaging properly.
5 Ensure the safeties have been tested and functioning properly.
6 Explain the operation of the elevator to the customer.
7 Assist the customer on an orientation ride. During this orientation, stress the importance of proper operation and regular maintenance.
8 Provide a copy of the Owner's Manual and Warranty to the customer. Be sure to record all required details per the Owner's Manual.

IMPORTANT

Do NOT turn over the elevator prior to having an active phone line and having properly tested the phone or automatic dialer phone (as applicable).

APPENDIX A: P-Tool Information



This appendix contains information about the Programming Tool (P-Tool) shown at the right.

To use the P-Tool (P/N 326049), connect it to the J1 connector in the bottom right-hand corner of the controller board.

Press the **[1]** key and the display will show the current status of the elevator.

You can use the P-Tool to perform the following:

- View the status of the elevator
- Change parameter settings
- View and clear the fault log
- View and clear the counters
- Put the system into temporary run mode
- Run the elevator while in temporary run mode

NOTE

For a detailed description of the controller and the programming tool, refer to the *6M2 Series Controller Operations Manual (000798)*.

NOTE

There is no need to power down the controller to plug in the P-Tool. When you plug the P-Tool into a controller that is powered on, the P-Tool displays gibberish. To clear this and read faults, press and hold the 'D' key for 3 seconds.

TEMPORARY RUN MODE

Follow these steps to use temporary run mode:

1. Connect the following temporary jumpers on the Micro-6 controller board:
   - TC4 and TC5
   - TC4 and TC6
   - TC11 and FL6-4
2. Cycle power via the UPS while holding P-Tool **1, 5, 0** to enter temporary mode.
3. Press P-Tool **A** to move up. For high speed, press P-Tool **B** also.
4. Press P-Tool **D** to move down. For high speed, press P-Tool **B** also.
5. Use the Savaria temporary run buttons (P/N 200438) as normal when in temporary mode.

NOTE

Be sure to remove the jumpers from the controller board when no longer running in temporary mode.

PROGRAMMING TOOL
SAVARIA LOGIC BOARD
Software v1.0

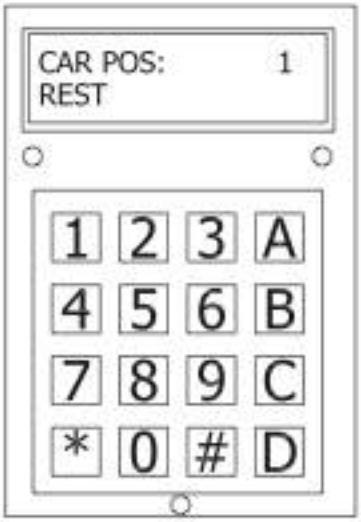

NORMAL DISPLAY:
TOP LINE = CAR POSITION
BOTTOM LINE = CAR STATUS

HOT KEY FUNCTIONS:
(*) - RESET
(A) - VIEW MENU

MENU OPTIONS:
1-NORMAL: DISPLAYS THE CAR'S POSITION AND STATUS
2-PROGRAM: ALLOWS YOU TO EDIT SYSTEM PARAMETERS
3-LOG: VIEW THE LAST 20 EVENTS
4-COUNT: THREE COUNTERS ARE PROVIDED: TOTAL, TRIP AND RE-LEVEL

A DETAILED DESCRIPTION OF EACH MENU OPTION IS PROVIDED

PROGRAMMING v1.0 (1 of 3)

CAR POS: 1 REST	PRESS (A) TO VIEW THE MENU
NORM (1) PROG (2) LOG (3) COUNTER (4)	PRESS (2) TO VIEW OR CHANGE PROGRAMMING
Password Then # Prog:	TYPE IN THE PASSWORD THEN PRESS THE (#) KEY FACTORY DEFAULT: 2,4,8,6,5
Number of Floors (2)	TYPE IN THE DESIRED NUMBER OF FLOORS AND PRESS # (ADJUSTABLE FROM 2 - 6)
Automatic PB (0)No (1)Yes (1)	SELECT (0) NO IF CONSTANT PRESSURE OPERATION IS DESIRED
Hydraulic App (0) (0)No (1)Yes	IF DRIVE SYSTEM IS HYDRAULIC SELECT (1)YES OTHERWISE SELECT (0) NO IF (0) NO IS SELECTED, RE-LEVELING IS DISABLED
Delay Up Stop X 0.01sec (000)	TYPE IN THE TIME AND PRESS # TO SET THE TIME THAT THE MOTOR WILL CONTINUE TO RUN AFTER "UL" DROPS OUT. ALLOWS CAR TO STOP HIGHER IN THE DEAD ZONE. (ADJUSTABLE 0-200 X10ms | 000 = DISABLED)
Run Timer (090) SEC	TYPE IN TIME AND PRESS # TO SET THE MAXIMUM RUN TIME (ADJUSTABLE FROM 30 - 180 SECONDS) See NOTE below.
Car Light Timer (05)Minute	TYPE IN THE TIME AND PRESS # TO SET THE TIME THE CAR LIGHT SHALL REMAIN ON AFTER THE COMPLETION OF A CALL (1-10 MINUTES)
Non-interference Timer (2) Sec	TYPE IN THE TIME AND PRESS # TO SET THE TIME BEFORE A NEW CALL CAN BE ACCEPTED (2-60 SEC)
Car Call Cancel Timer (10) Sec	TYPE IN THE TIME AND PRESS # TO SET THE TIME AFTER WHICH THE CALL WILL BE DROPPED IF THE CAR IS UNABLE TO RESPOND (ADJUSTABLE 0 - 60 SECONDS)

ONCE IN PRORAMMING MODE:

TO MAKE A CHANGE PRESS THE KEY FOR THE DESIRED NUMBER AND PRESS THE (#) KEY TO ACCEPT THE CHANGE.

(A) TO RETUN TO THE MAIN MENU
(B) TO SCROLL UP
(C) TO SCROLL DOWN
(D) TO CLEAR THE CURRENT VALUE.
(#) TO ACCEPT THE CHANGE
(*) TO PERFORM A RESET

NOTE: If the RUN TIMER trips on a geared unit and the lift is not at floor level, it will have to be moved to a landing before the reset can be performed.

PROGRAMMING v1.0 (2 of 3)

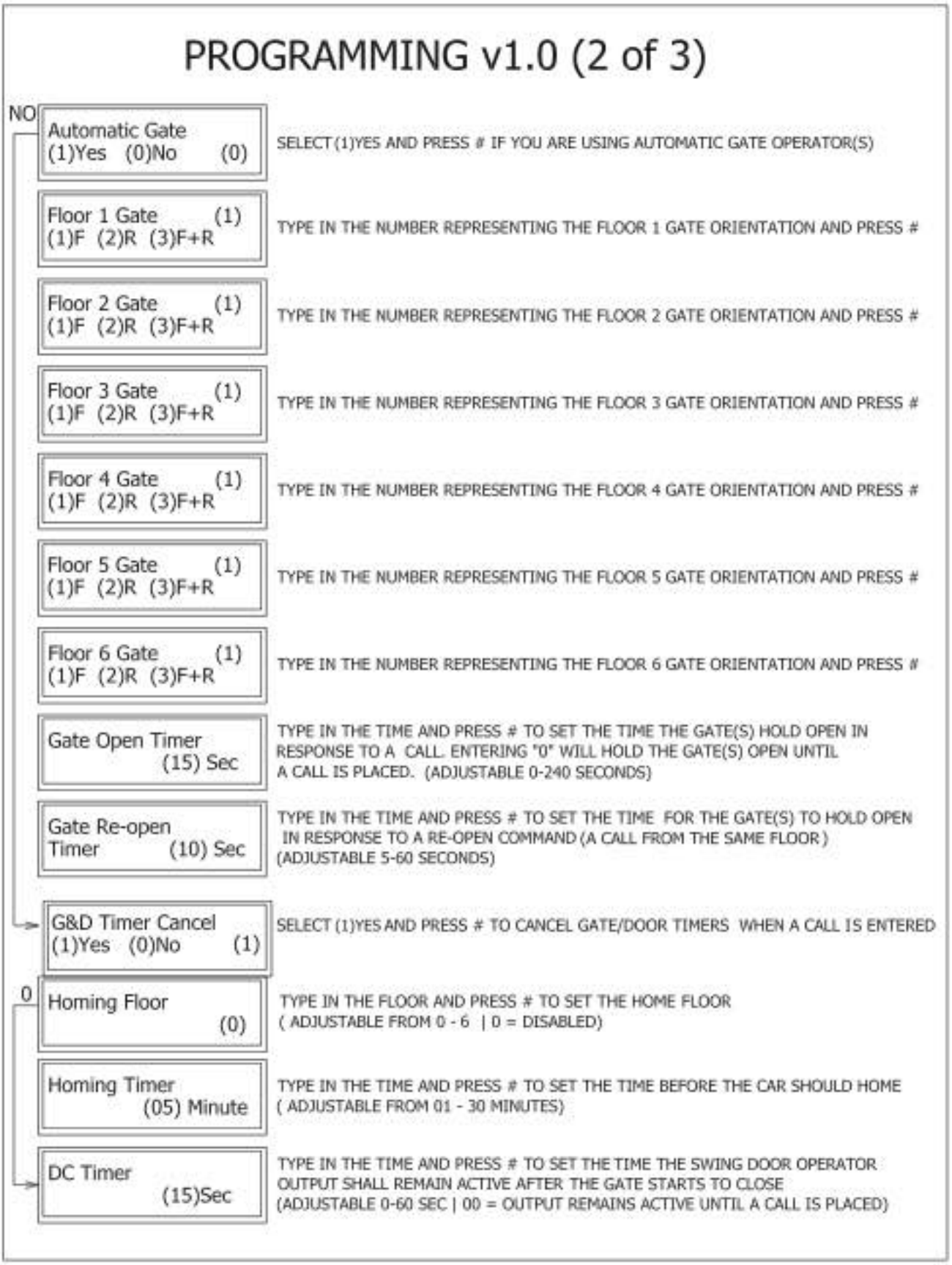

PROGRAMMING v1.0 (3 of 3)

Short Floors 1/2 (0)No (1)Yes (0)	SELECT (1)YES AND PRESS # TO INHIBIT HIGH SPEED IN BOTH DIRECTIONS WHEN RUNNING BETWEEN FLOORS 1 AND 2 MIN FLOOR DISTANCE IS 7" FOR APB AND 14" FOR CP
Short Floors 2/3 (0)No (1)Yes (0)	SELECT (1)YES AND PRESS # TO INHIBIT HIGH SPEED IN BOTH DIRECTIONS WHEN RUNNING BETWEEN FLOORS 2 AND 3 MIN FLOOR DISTANCE IS 7" FOR APB AND 14" FOR CP
Short Floors 3/4 (0)No (1)Yes (0)	SELECT (1)YES AND PRESS # TO INHIBIT HIGH SPEED IN BOTH DIRECTIONS WHEN RUNNING BETWEEN FLOORS 3 AND 4 MIN FLOOR DISTANCE IS 7" FOR APB AND 14" FOR CP
Short Floors 4/5 (0)No (1)Yes (0)	SELECT (1)YES AND PRESS # TO INHIBIT HIGH SPEED IN BOTH DIRECTIONS WHEN RUNNING BETWEEN FLOORS 4 AND 5 MIN FLOOR DISTANCE IS 7" FOR APB AND 14" FOR CP
Short Floors 5/6 (0)No (1)Yes (0)	SELECT (1)YES AND PRESS # TO INHIBIT HIGH SPEED IN BOTH DIRECTIONS WHEN RUNNING BETWEEN FLOORS 5 AND 6 MIN FLOOR DISTANCE IS 7" FOR APB AND 14" FOR CP
Call But. Fault 0-No 1-A 2-U (2)	No: WILL DISABLE THIS FEATURE A: WILL FLASH ALL CODES TO THE CALL BUTTON LIGHTS U: WILL FLASH ONLY THOSE CODES WHICH ARE USER CORRECTABLE
Auto Shutdown Counter X10(000)	TYPE IN THE NUMBER AND PRESS # TO SET THE NUMBER OF TRIPS BEFORE THE ELEVATOR IS DISABLED (ADJUSTABLE 0 - 999 | 0 = DISABLED) THIS FEATURE WILL BE DISABLED AFTER FOUR ACTIVATIONS
CALL 3 ASSIGNMENT (3)	TYPE IN THE FLOOR NUMBER WHICH THE CAR WILL RUN TO WHEN THIS CALL IS PLACED. THE FLOOR 3 DOOR SETTINGS WILL APPLY WHEN THIS IS USED. (THIS PARAMETER DOES NOT SHOW UP WHEN THE NUMBER OF FLOORS >= 3)
CALL 4 ASSIGNMENT (4)	TYPE IN THE FLOOR NUMBER WHICH THE CAR WILL RUN TO WHEN THIS CALL IS PLACED. THE FLOOR 4 DOOR SETTINGS WILL APPLY WHEN THIS IS USED. (THIS PARAMETER DOES NOT SHOW UP WHEN THE NUMBER OF FLOORS >= 4)
CALL 5 ASSIGNMENT (5)	TYPE IN THE FLOOR NUMBER WHICH THE CAR WILL RUN TO WHEN THIS CALL IS PLACED. THE FLOOR 5 DOOR SETTINGS WILL APPLY WHEN THIS IS USED. (THIS PARAMETER DOES NOT SHOW UP WHEN THE NUMBER OF FLOORS >= 5)
CALL 6 ASSIGNMENT (6)	TYPE IN THE FLOOR NUMBER WHICH THE CAR WILL RUN TO WHEN THIS CALL IS PLACED. THE FLOOR 6 DOOR SETTINGS WILL APPLY WHEN THIS IS USED. (THIS PARAMETER DOES NOT SHOW UP WHEN THE NUMBER OF FLOORS = 6)
Modify Password (1)Yes (0)No (0)	TYPE IN C TO KEEP THE PASSWORD AND VIEW NEXT PARAMETER TYPE IN 1 AND PRESS # TO CHANGE THE PASSWORD NOTE: PASSWORD MUST BE 5 DIGITS (NUMERICAL ONLY)

LOG



PRESS (A) TO VIEW THE MENU

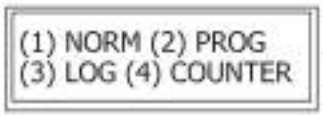

PRESS (3) TO VIEW THE LOG



THE FIRST LINE IS A DESCRIPTION OF THE EVENT
2U=EVENT OCCURED AT 2ND FL WHILE TRAVELING UP
L= LAST EVENT



(C) VIEWS PREVIOUS EVENT UNTIL "NO EVENTS" IS SEEN

ONCE IN LOG MODE:

THE LOG STORES 20 ERRORS IN A LAST IN FIRST OUT FORMAT.

(A) TO RETUN TO THE MAIN MENU
(B) TO VIEW LATER EVENT
(C) TO VIEW EARLIER EVENT
(D) TO CLEAR THE LOG
Note: PASSWORD IS REQUIRED TO CLEAR LOG
(*) TO PERFORM A RESET

COUNTERS



PRESS (A) TO VIEW THE MENU

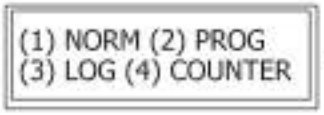

PRESS (4) TO VIEW COUNTERS

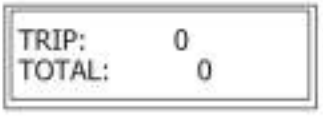

THE "TRIP" AND "TOTAL" RUN COUNTERS ARE DISPLAYED



(C) TO VIEW UP LEVELING COUNTER

ONCE IN COUNTER MODE:

THE SYSTEM HAS THREE COUNTERS.

TRIP: INCREMENTS EACH TIME THE CAR MOVES IN RESPONSE TO A CALL. RESETTABLE

TOTAL: SAME AS TRIP BUT NOT RESETTABLE

UP LEVELING: INCREMENTS EACH TIME THE CAR MOVES UP WITHOUT A CALL. RESETTABLE

(A) TO RETUN TO THE MAIN MENU
(B) TO VIEW PREVIOUS COUNTERS
(C) TO VIEW NEXT COUNTER
(D) TO CLEAR THE COUNTERS
Note: PASSWORD IS REQUIRED TO CLEAR COUNTERS
(*) TO PERFORM A RESET

APPENDIX B: Diagnostic Beep Codes

The Micro-6 controller can be set up to provide audible fault codes (diagnostic beep codes). These codes can help the user diagnose certain problems themselves and also provide information to the dealer as to why a lift isn't functioning properly.

To enable the codes, use the P-Tool and set the parameter "call but.fault" to:

- 0 for no audible codes
- 1 for User codes only
- 2 for User and Service codes

User codes provide feedback to the user and do not require a service visit.

- 1 short beep - a gate is open or the in-car Stop switch is activated. Make sure the in-car Stop switch is in the Run position. Check that the car gate is closed.
- 2 short beeps - a door is open. Check that the landing door is closed.
- 3 short beeps - gate needs to be cycled. Manually open the gate.
- Single beep every 30 seconds - power failure, unit will only respond to calls/commands to go in the down direction.

Service codes are those that require a site visit. All Service codes begin with one long 2-second beep.

- 1 long and 1 short beep - possible problems are overload trip, run timer fault, safety circuit open, door lock fault or auto shutdown counter.
- 1 long and 2 short beeps - possible problems are re-level shutdown or low pressure switch activated.
- 1 long and 3 short beeps - possible problems are selector fault, selector encoding or position error.

APPENDIX C: Maintenance

Regular maintenance will keep the elevator in proper operating condition.

To ensure proper operating condition of your unit, the items listed below must be inspected and, if necessary, **serviced every 3 months**.

Additional inspections may be required depending on usage.

NOTE

For Maintenance Procedures that are code-compliant, please refer to ASME A17.1-2010/CSA B44-10, Section 8.6 (Maintenance, Repair, Replacement, and Testing).

1. Tighten all rail and cab fastening bolts.
2. Lubricate the counterweight rails with a light grease, such as white lithium.
3. Inspect the traveling cable for wear. Replace if any cuts or damage to the jacket is evident.
4. Inspect the elevator cables for wear or damage and replace if necessary. Always replace the safety washers at the swaged end of the cable when replacing cables. The washers are provided with replacement cables.
5. Inspect the safety washers at the swaged end of the elevator cables. Put the elevator on slack rope high enough so you can safely get under the elevator. Activate the manual lowering device so there is enough slack in the rope to pull the rope with the swag fitting down to view the washer. Replace the washer if there is any visible damage.
6. Inspect the OSG cables for wear or damage and replace if necessary.
7. Replace the batteries inside the control panel as indicated on the battery label.
8. Activate and test the safety mechanism.
9. Check that the phone is functioning properly.

APPENDIX D: Cab Information

Order of installation of cab parts

This appendix illustrates the order of installation for **STANDARD** cab types.

IMPORTANT

For STEEL cab assembly instructions, refer to Tech Bulletin, P/N 001155.

For GLASS cab assembly instructions, refer to Tech Bulletin, P/N 001024.

NOTE

The numbers in the following cab assembly illustrations represent the sequence of assembly. For example, install the floor first, followed by the COP wall and so on. Be sure the light screens are installed BEFORE assembling the cab.

Cab type differences

This section describes the differences between cab types.

Figure 175
Type 1 right

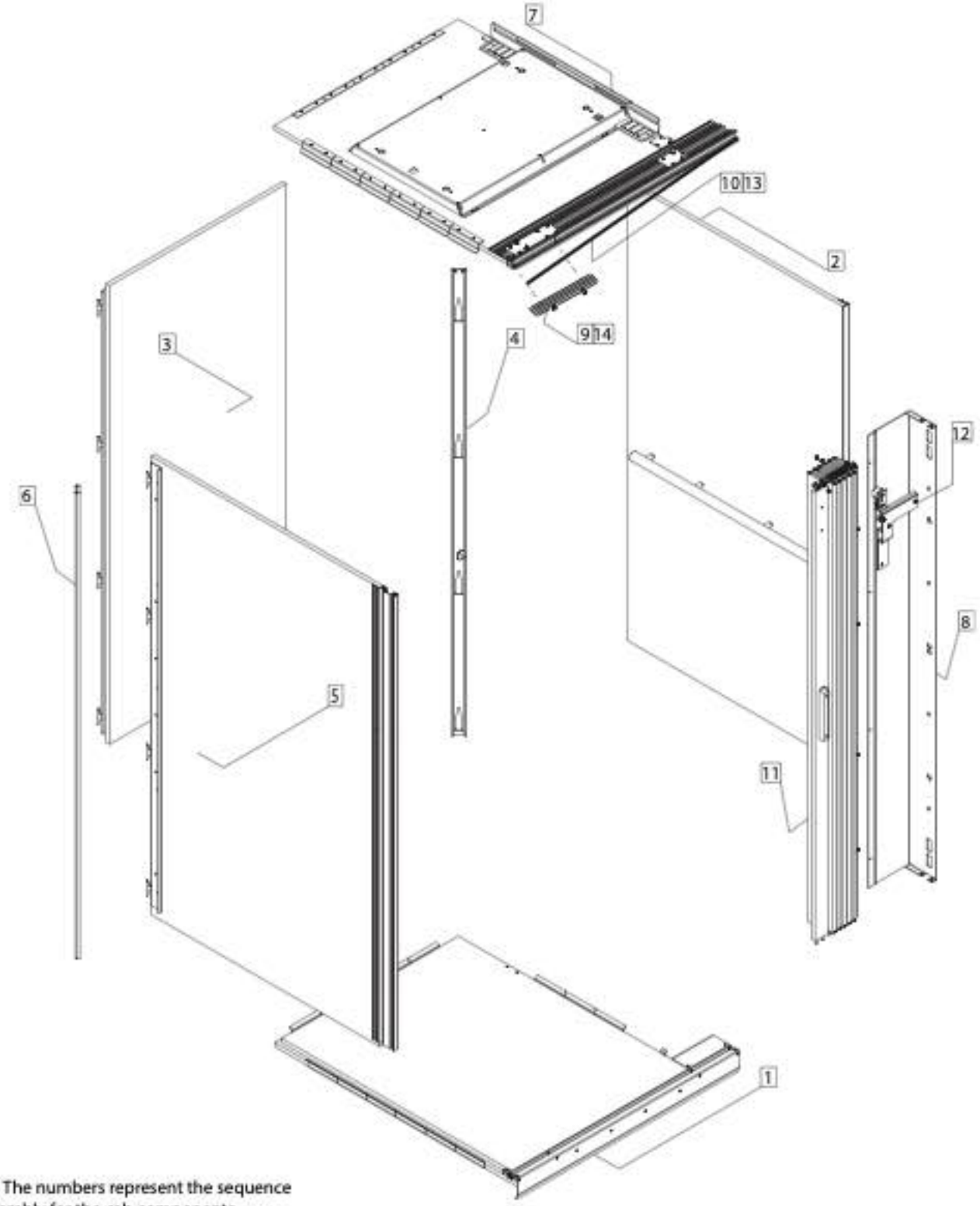

NOTE: The numbers represent the sequence of assembly for the cab components.

1) platform	6) channel joiner	11) gate
2) COP wall	7) ceiling	12) gate stabilizer
3) side wall opposite entrance	8) pocket	13) header splice tab—reattach
4) channel joiner	9) gate track corner piece—remove to install gate	14) gate track corner piece—reattach
5) side wall opposite COP wall	10) header splice tab—remove to install gate	

Figure 176
Type 1 right assembled

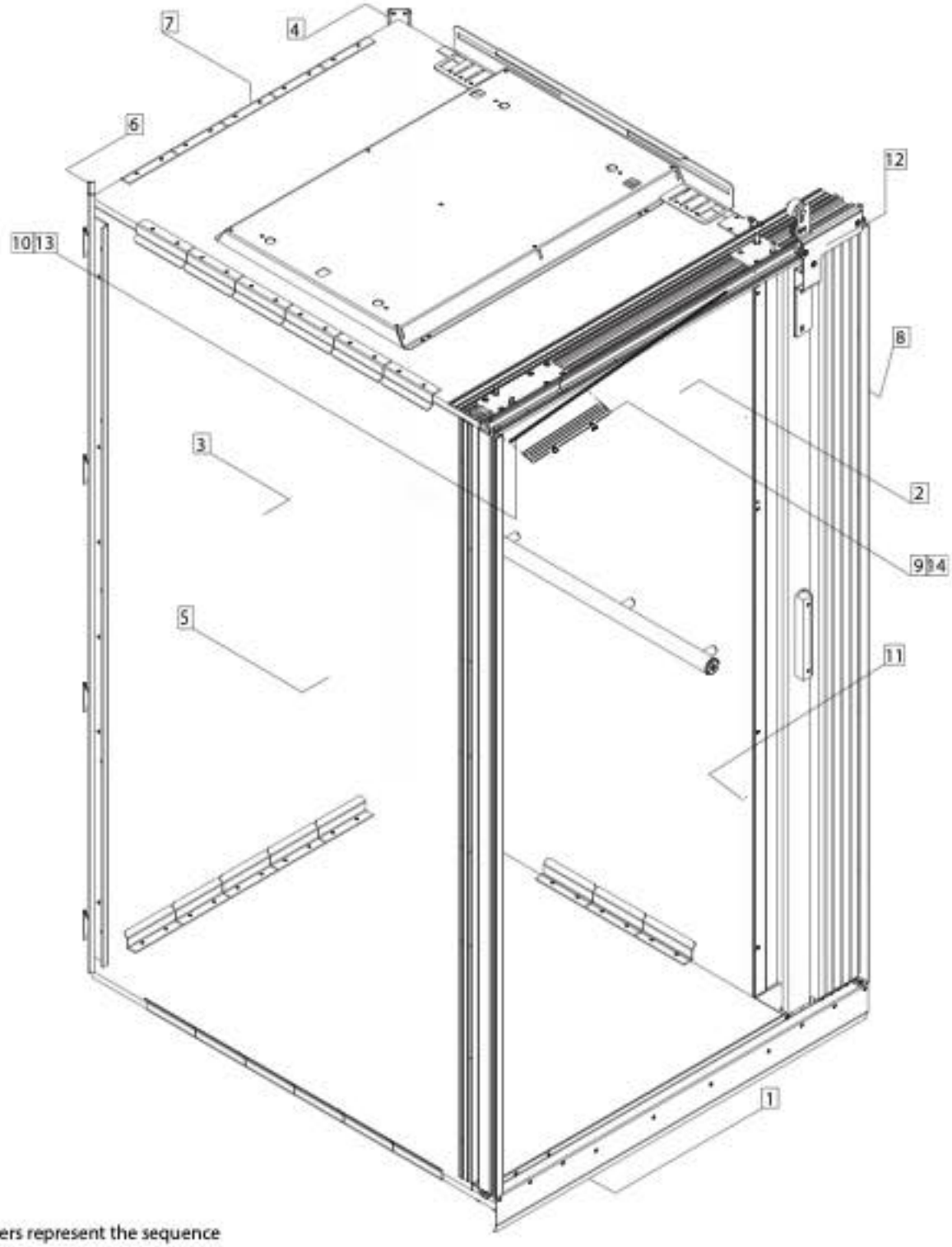

NOTE: The numbers represent the sequence of assembly for the cab components.

1) platform	6) channel joiner	11) gate
2) COP wall	7) ceiling	12) gate stabilizer
3) side wall opposite entrance	8) pocket	13) header splice tab—reattach
4) channel joiner	9) gate track corner piece—remove to install gate	14) gate track corner piece—reattach
5) side wall opposite COP wall	10) header splice tab—remove to install gate	

Figure 177
Type 1 left

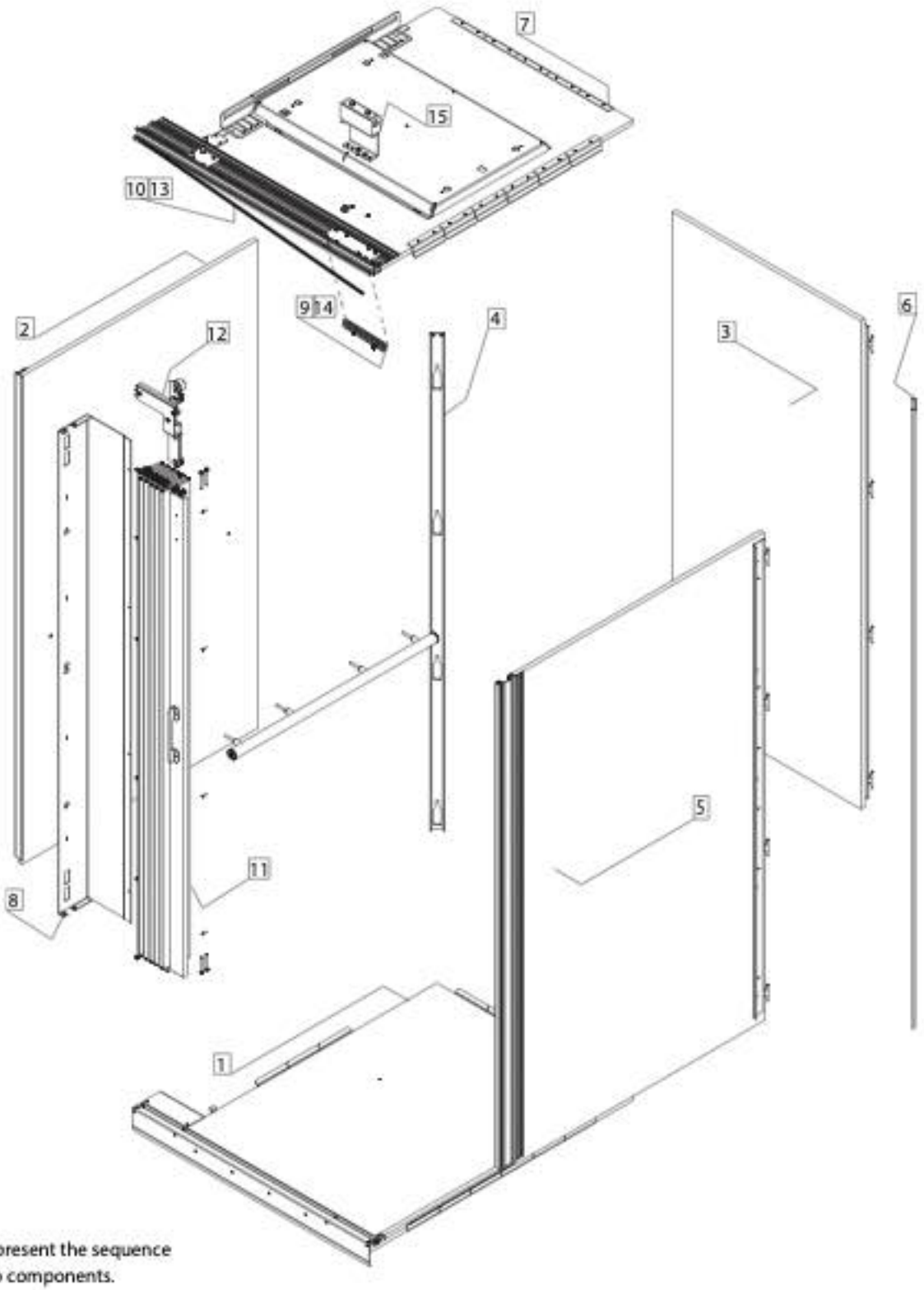

NOTE: The numbers represent the sequence of assembly for the cab components.

1) platform	6) channel joiner	11) gate
2) COP wall	7) ceiling	12) gate stabilizer
3) side wall opposite entrance	8) pocket	13) header splice tab—reattach
4) channel joiner	9) gate track corner piece—remove to install gate	14) gate track corner piece—reattach
5) side wall opposite COP wall	10) header splice tab—remove to install gate	15) gate switch

Figure 178
Type 1 left assembled

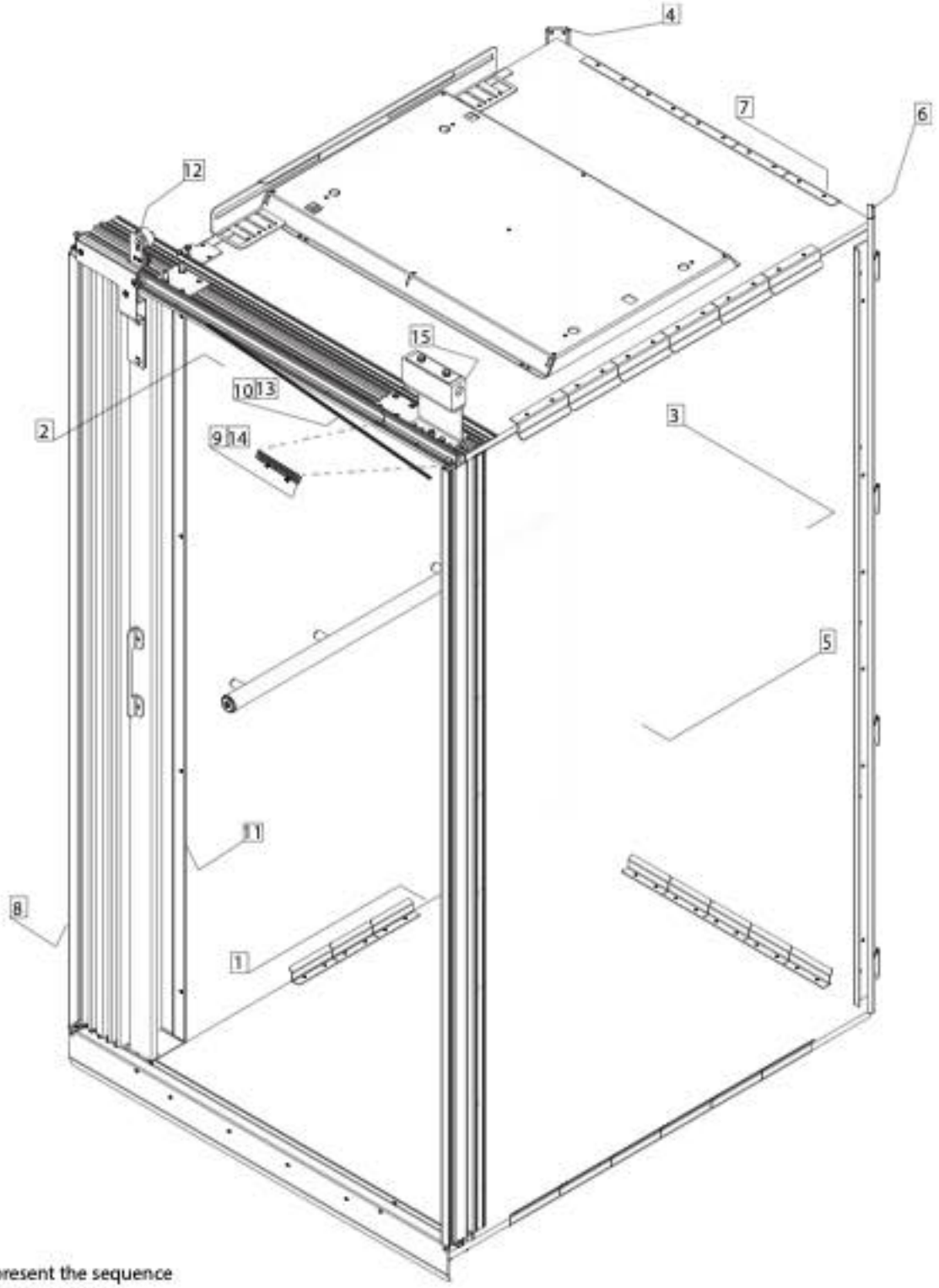

NOTE: The numbers represent the sequence of assembly for the cab components.

1) platform	6) channel joiner	11) gate
2) COP wall	7) ceiling	12) gate stabilizer
3) side wall opposite entrance	8) pocket	13) header splice tab—reattach
4) channel joiner	9) gate track corner piece—remove to install gate	14) gate track corner piece—reattach
5) side wall opposite COP wall	10) header splice tab—remove to install gate	15) gate switch

Figure 179
Type 2

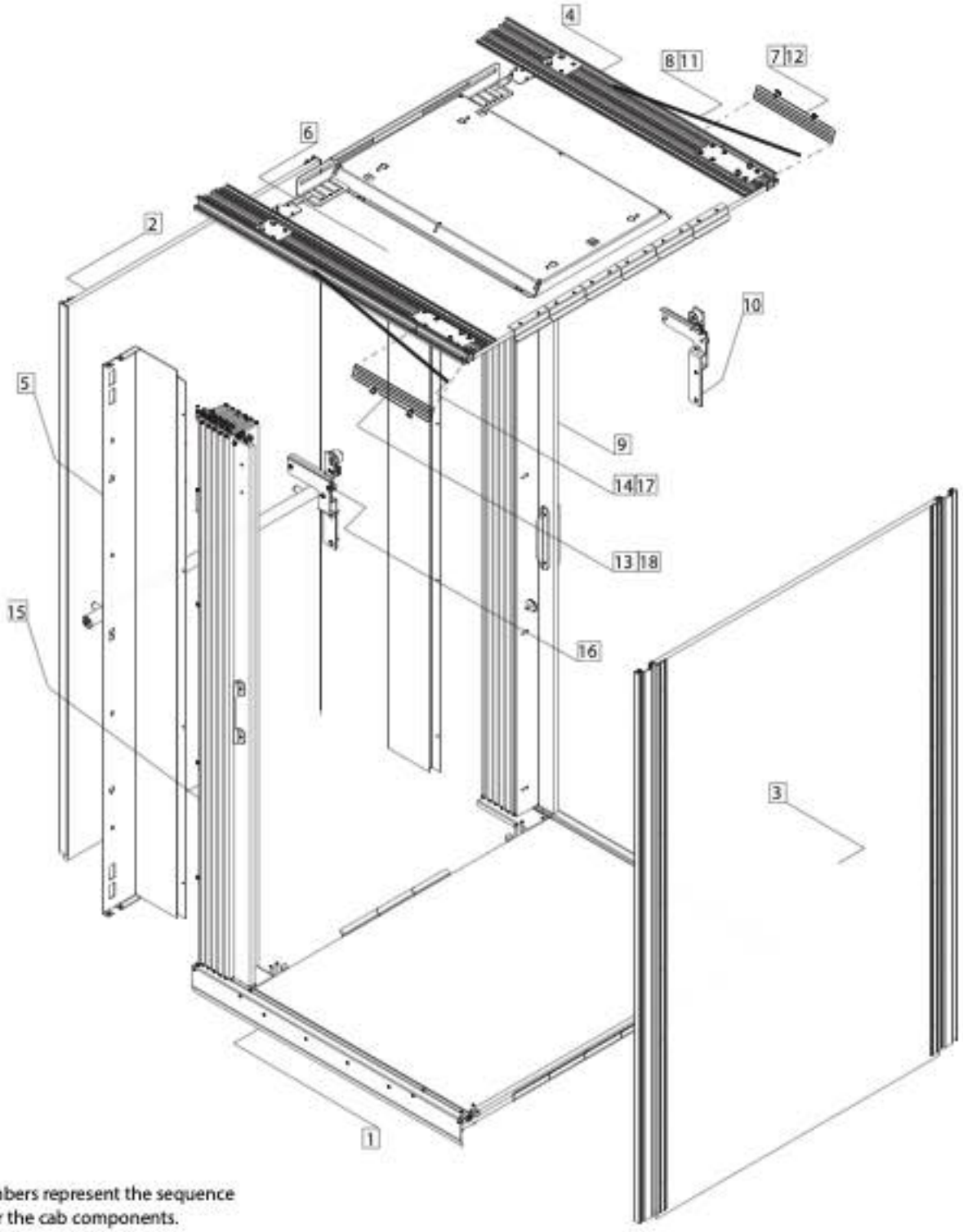

NOTE: The numbers represent the sequence of assembly for the cab components.

1) platform	7) gate track corner piece—remove to install gate	13) gate track corner piece—remove to install gate
2) COP wall	8) header splice tab—remove to install gate	14) header splice tab—remove to install gate
3) side wall opposite COP wall	9) gate	15) gate
4) ceiling	10) gate stabilizer	16) gate stabilizer
5) pocket	11) header splice tab—reattach	17) header splice tab—reattach
6) pocket	12) gate track corner piece—reattach	18) gate track corner piece—reattach

Figure 180
Type 2 assembled

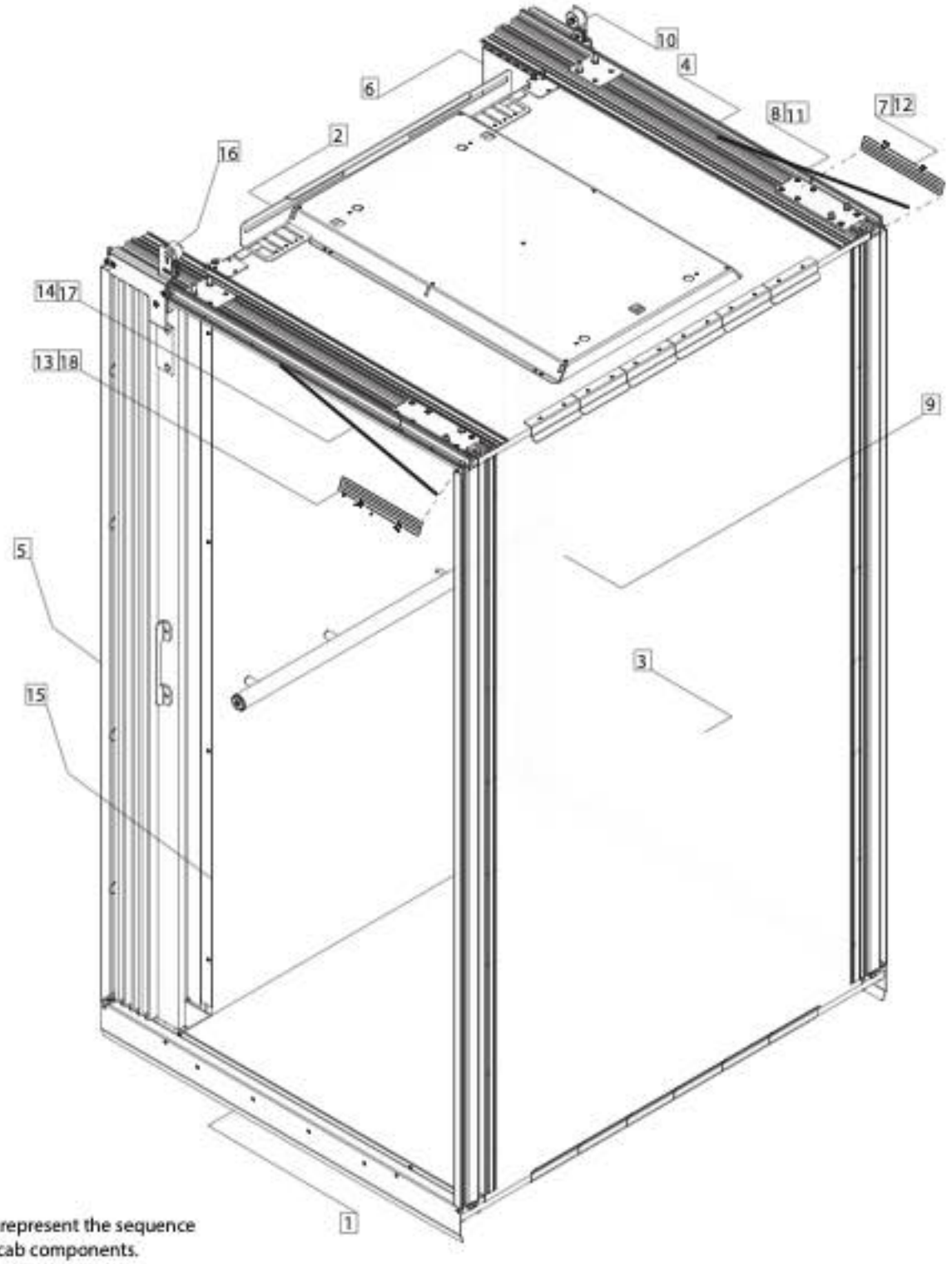

NOTE: The numbers represent the sequence of assembly for the cab components.

1) platform	7) gate track corner piece—remove to install gate	13) gate track corner piece—remove to install gate
2) COP wall	8) header splice tab—remove to install gate	14) header splice tab—remove to install gate
3) side wall opposite COP wall	9) gate	15) gate
4) ceiling	10) gate stabilizer	16) gate stabilizer
5) pocket	11) header splice tab—reattach	17) header splice tab—reattach
6) pocket	12) gate track corner piece—reattach	18) gate track corner piece—reattach

Figure 181
Type 3

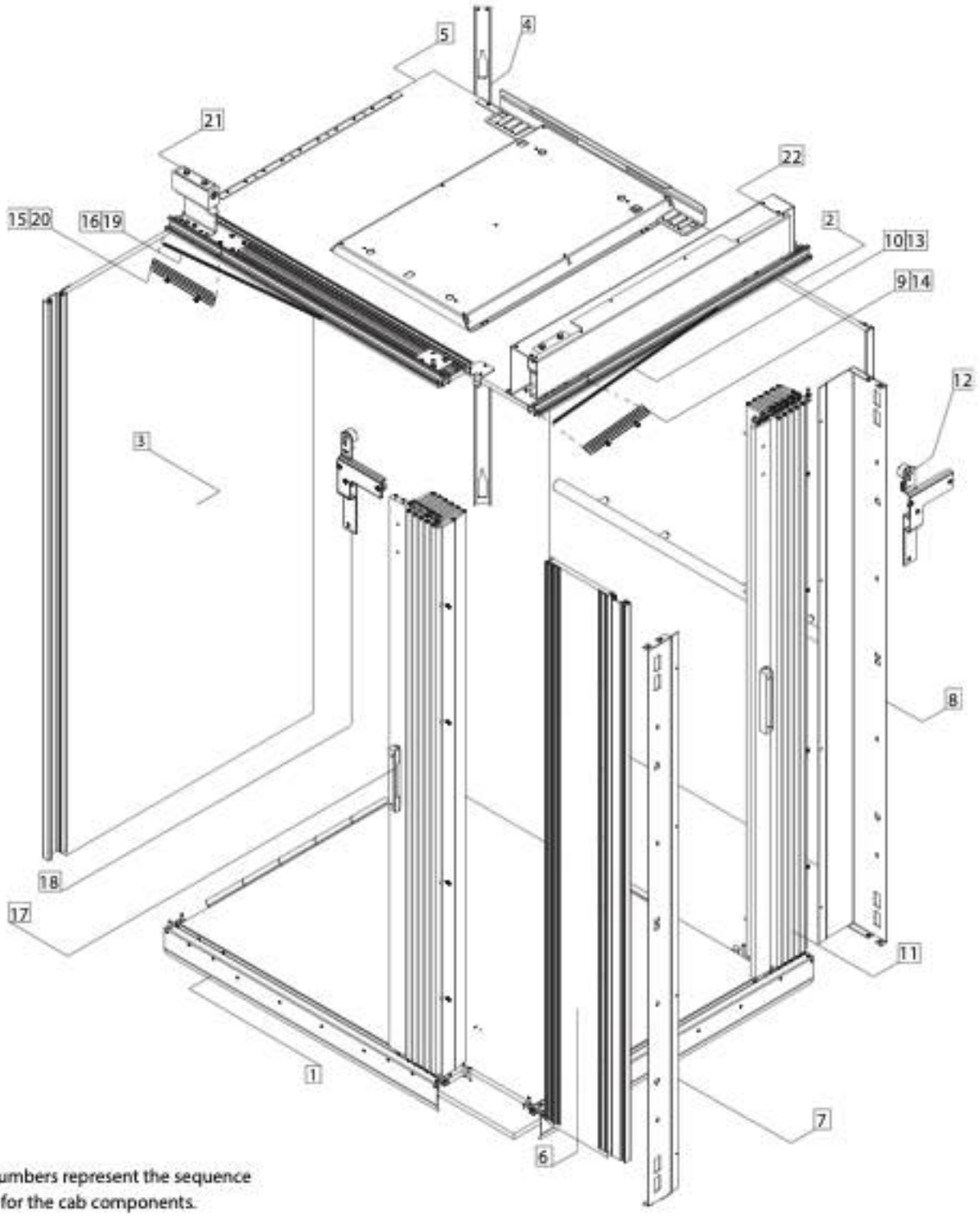

NOTE: The numbers represent the sequence of assembly for the cab components.

1) platform	8) pocket	15) gate track corner piece—remove to install gate
2) COP wall	9) gate track corner piece—remove to install gate	16) header splice tab—remove to install gate
3) side wall	10) header splice tab—remove to install gate	17) gate
4) joiner bracket	11) gate	18) gate stabilizer
5) ceiling	12) gate stabilizer	19) header splice tab—reattach
6) nib wall	13) header splice tab—reattach	20) gate track corner piece—reattach
7) pocket	14) gate track corner piece—reattach	21) gate switch 22) gate operator

Figure 182
Type 3 assembled

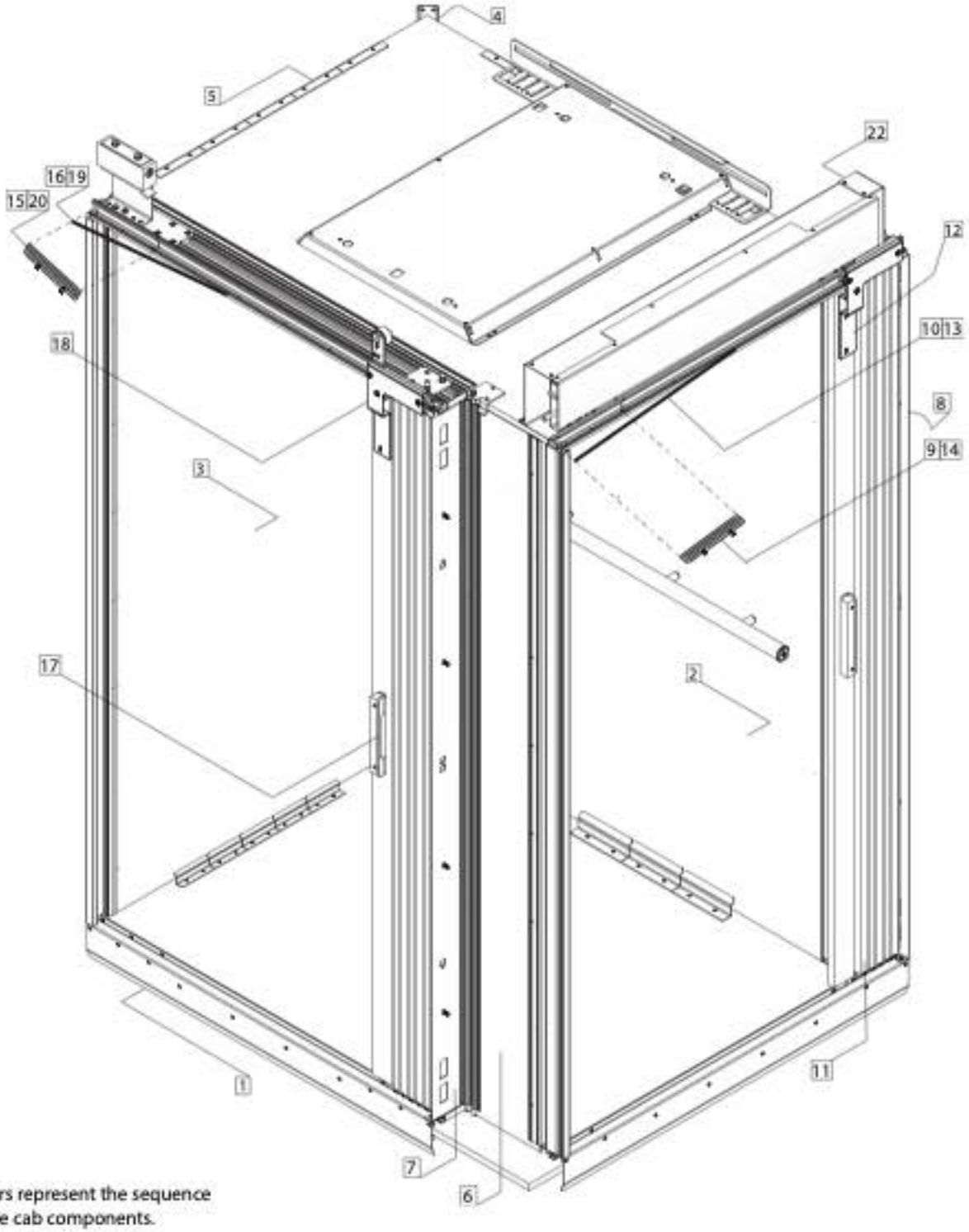

NOTE: The numbers represent the sequence of assembly for the cab components.

1) platform	8) pocket	15) gate track corner piece—remove to install gate
2) COP wall	9) gate track corner piece—remove to install gate	16) header splice tab—remove to install gate
3) side wall	10) header splice tab—remove to install gate	17) gate
4) joiner bracket	11) gate	18) gate stabilizer
5) ceiling	12) gate stabilizer	19) header splice tab—reattach
6) mob wall	13) header splice tab—reattach	20) gate track corner piece—reattach
7) pocket	14) gate track corner piece—reattach	21) gate switch 22) gate operator

Figure 183
Type 4

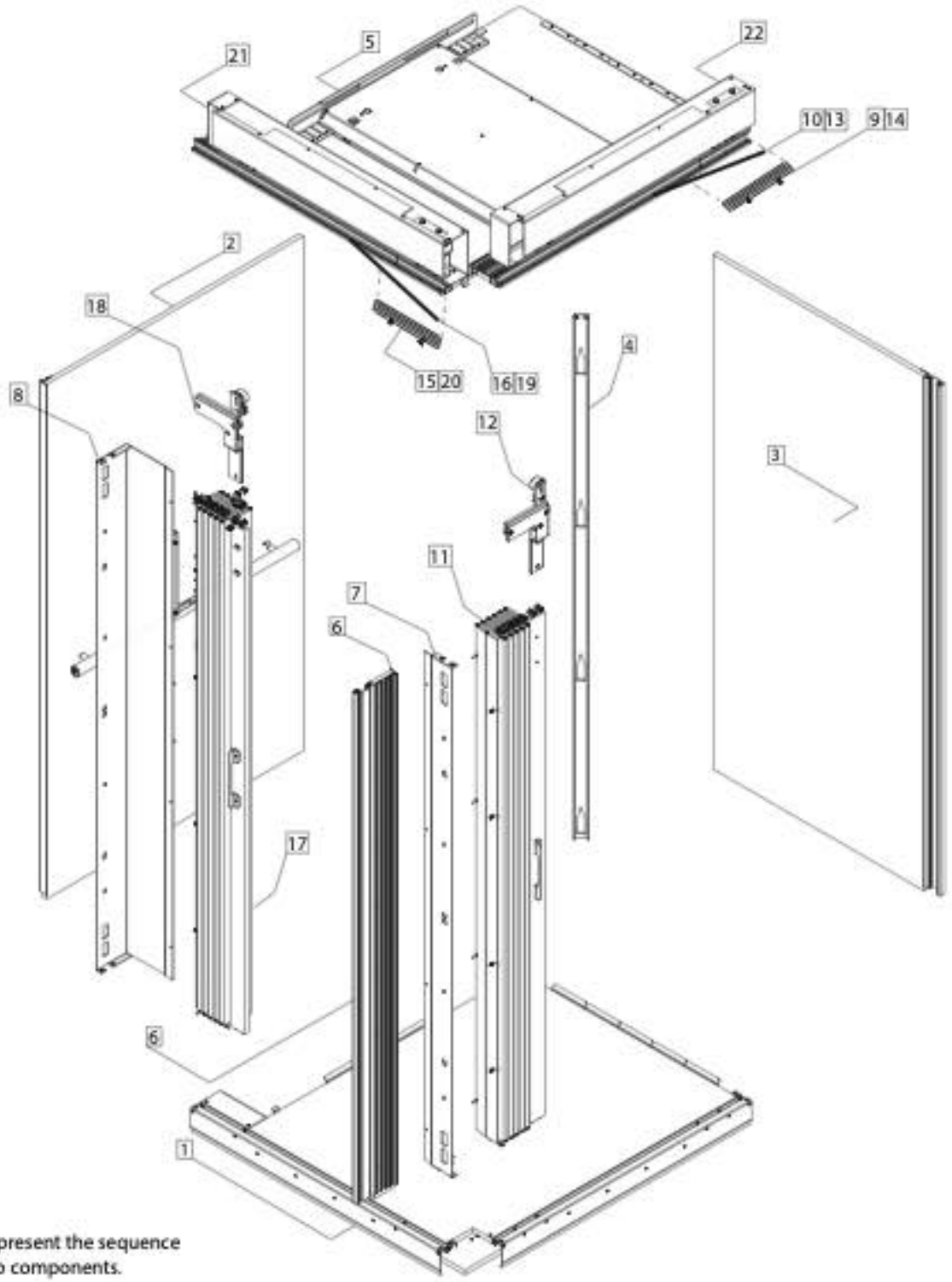

NOTE: The numbers represent the sequence of assembly for the cab components.

1) platform	8) pocket	15) gate track corner piece—remove to install gate
2) COP wall	9) gate track corner piece—remove to install gate	16) header splice tab—remove to install gate
3) side wall	10) header splice tab—remove to install gate	17) gate
4) joiner bracket	11) gate	18) gate stabilizer
5) ceiling	12) gate stabilizer	19) header splice tab—reattach
6) mob wall	13) header splice tab—reattach	20) gate track corner piece—reattach
7) pocket	14) gate track corner piece—reattach	21) gate operator / 22) gate operator

Figure 184
Type 4 assembled

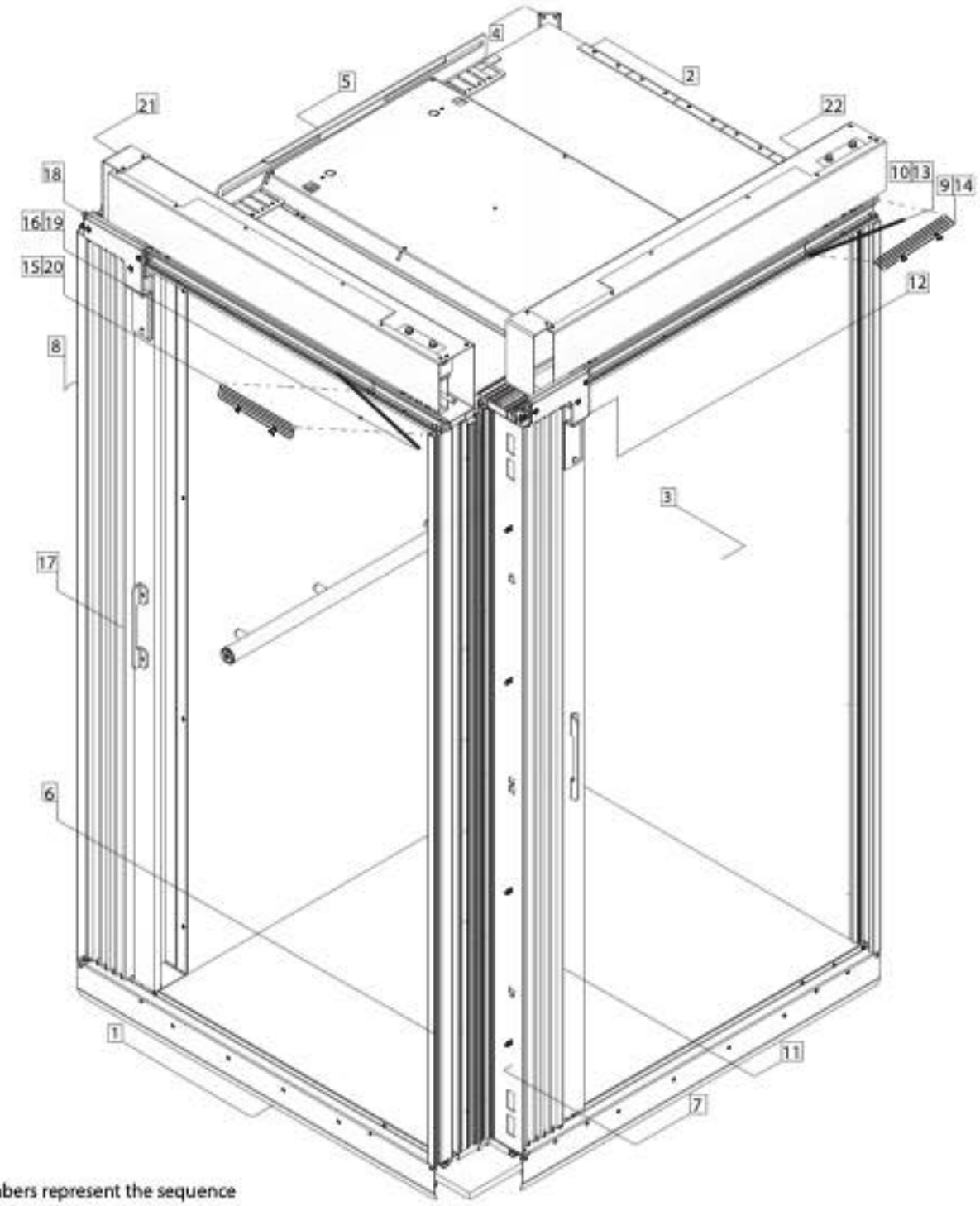

NOTE: The numbers represent the sequence of assembly for the cab components.

1) platform	8) pocket	15) gate track corner piece—remove to install gate
2) COP wall	9) gate track corner piece—remove to install gate	16) header splice tab—remove to install gate
3) side wall	10) header splice tab—remove to install gate	17) gate
4) joiner bracket	11) gate	18) gate stabilizer
5) ceiling	12) gate stabilizer	19) header splice tab—reattach
6) nib wall	13) header splice tab—reattach	20) gate track corner piece—reattach
7) pocket	14) gate track corner piece—reattach	21) gate operator 22) gate operator

Figure 185
Type 5 center left small

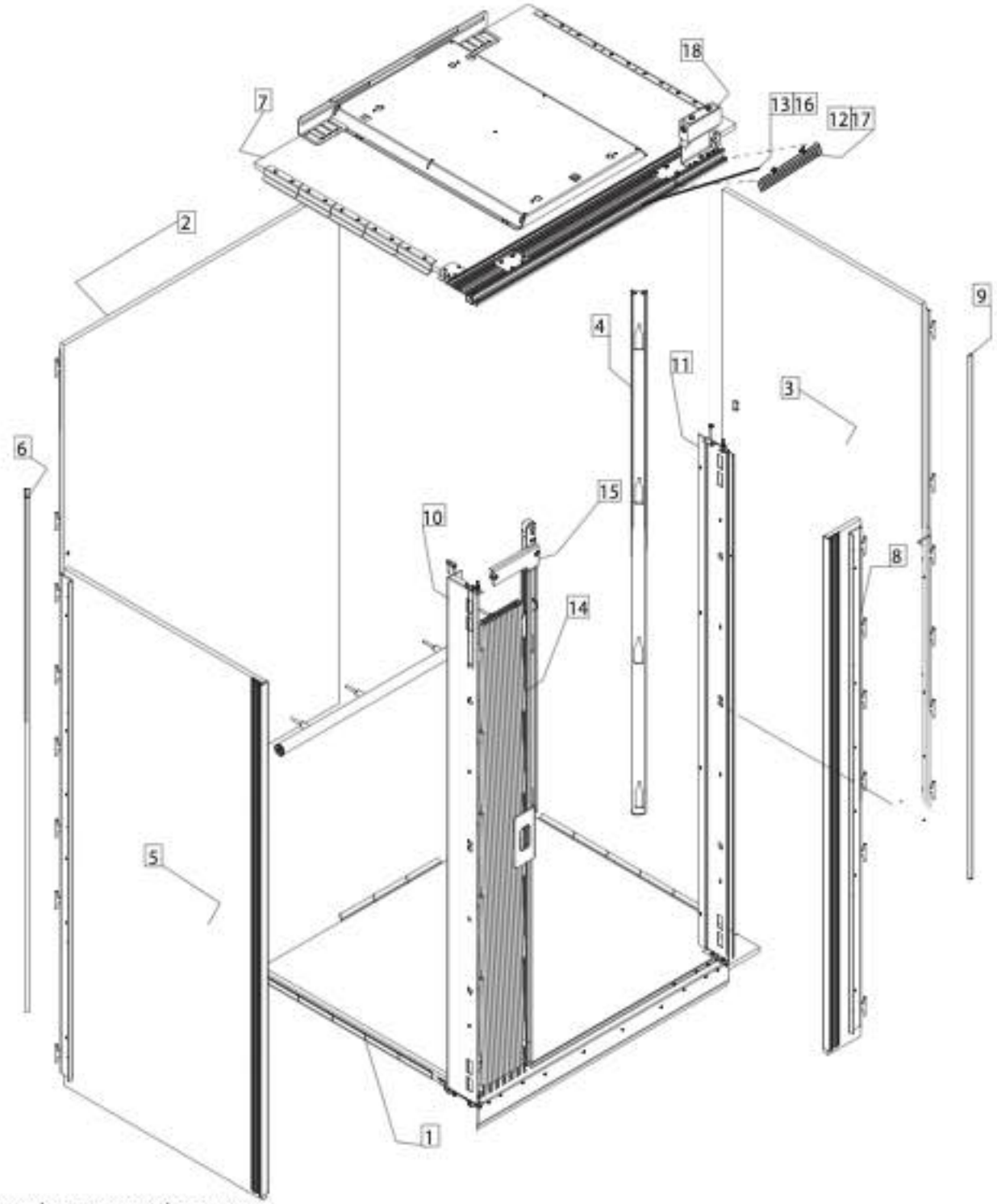

NOTE: The numbers represent the sequence of assembly for the cab components.

1) platform	7) ceiling	13) header splice tab—remove to install gate
2) COP wall	8) nib wall	14) gate
3) side wall	9) joiner channel	15) gate stabilizer
4) joiner channel	10) pocket	16) header splice tab—reattach
5) side wall	11) slam support	17) gate track corner piece—reattach
6) joiner channel	12) gate track corner piece—remove to install gate	18) gate switch

Figure 186
Type 5 center left small assembled

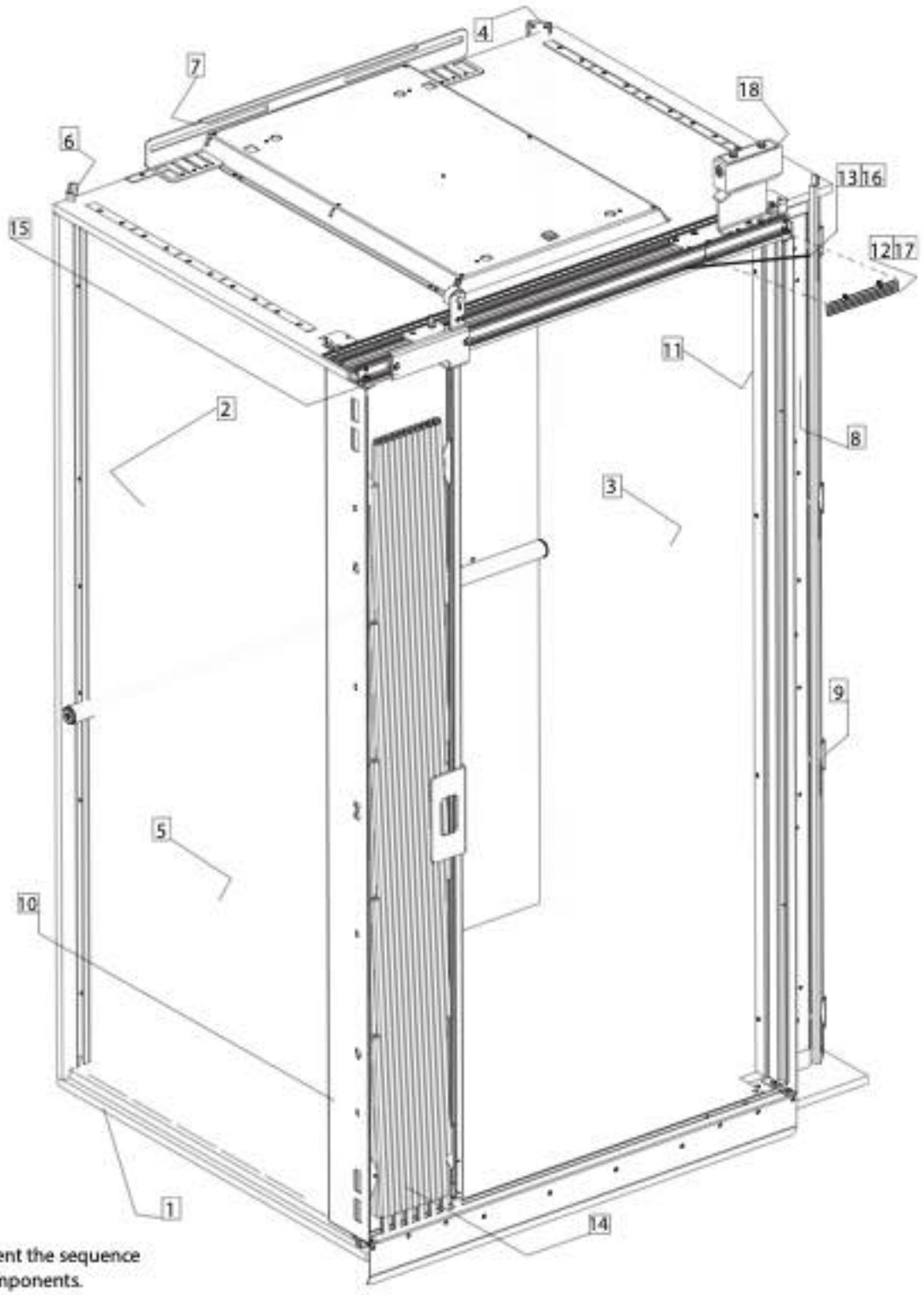

NOTE: The numbers represent the sequence of assembly for the cab components.

1) platform	7) ceiling	13) header splice tab—remove to install gate
2) COP wall	8) nib wall	14) gate
3) side wall	9) joiner channel	15) gate stabilizer
4) joiner channel	10) pocket	16) header splice tab—reattach
5) side wall	11) slam support	17) gate track corner piece—reattach
6) joiner channel	12) gate track corner piece—remove to install gate	18) gate switch

Figure 187
Type 5 center right small

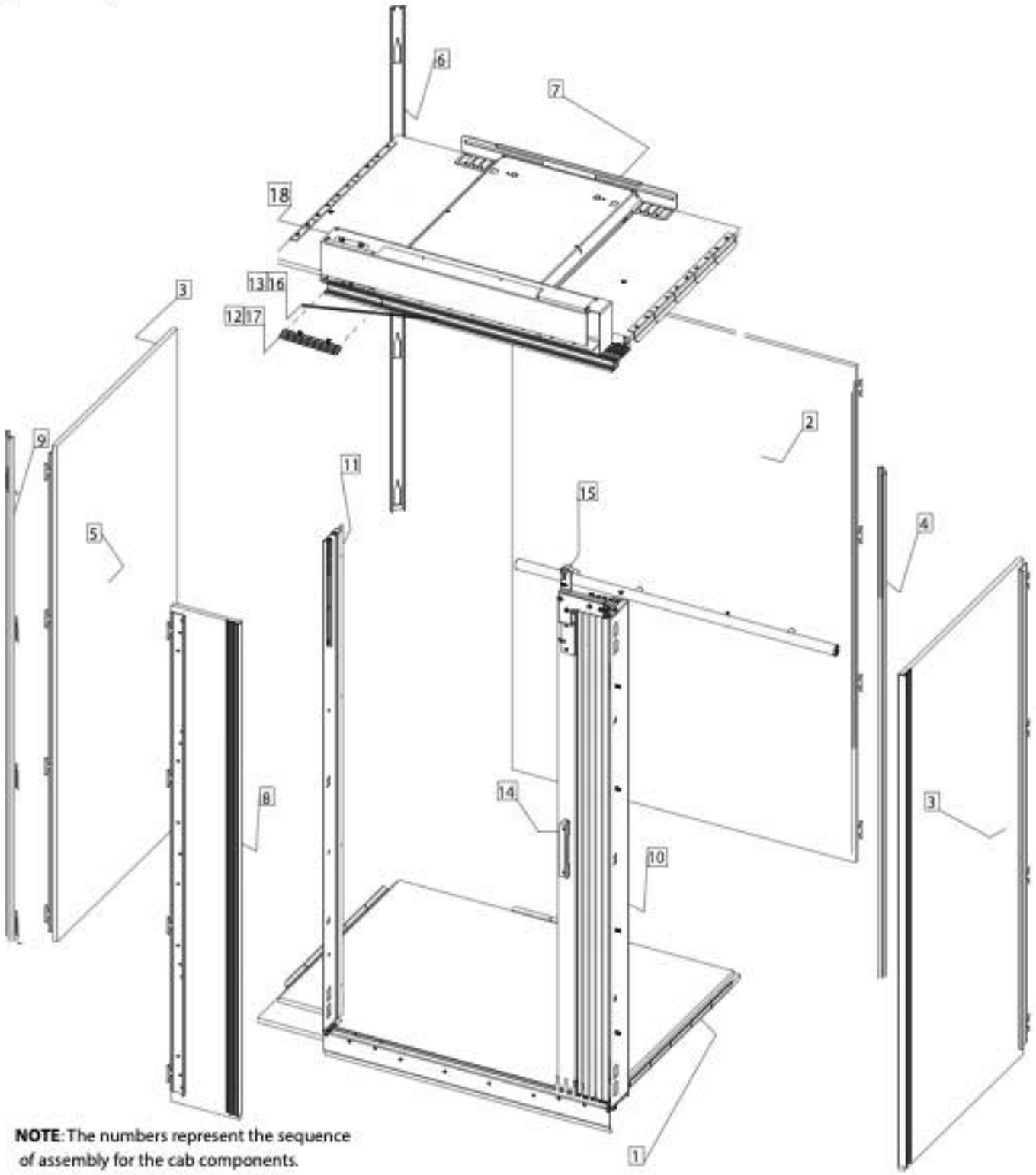

NOTE: The numbers represent the sequence of assembly for the cab components.

1) platform	7) ceiling	13) header splice tab—remove to install gate
2) COP wall	8) nib wall	14) gate
3) side wall	9) joiner channel	15) gate stabilizer
4) joiner channel	10) pocket	16) header splice tab—reattach
5) side wall	11) slam support	17) gate track corner piece—reattach
6) joiner channel	12) gate track corner piece—remove to install gate	18) gate operator

Figure 188
Type 5 center right small assembled

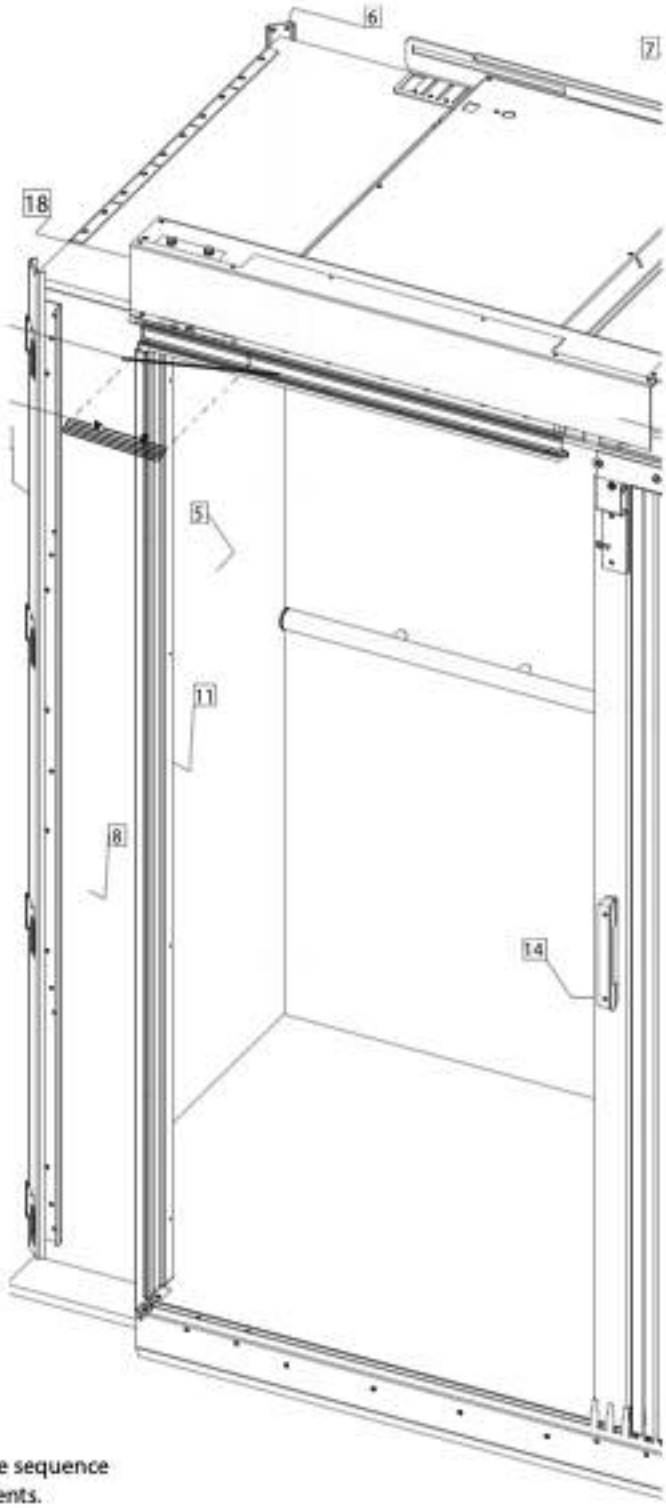

s represent the sequence
cab components.

Cab types – differences

This section describes the installation differences between the type 1R cab and the rest of the available cab types:

- Type 1 right (used in this guide)
- Type 1 left
- Type 2
- Type 3
- Type 4
- Type 5 center left hand small
- Type 5 center right hand small
- Type 5 center left
- Type 5 center right
- Type 5 left hand
- Type 5 right hand

Considerations

Cab sizes, number of doors per elevator, and fastener attachment locations are different from type to type. However, in general, all floors, ceilings, slam side tops and bottoms, and pocket side tops and bottoms have the same fastener locations.

For example, type 3 includes an additional door with respect to type 1, and therefore you have two slams that require 2½" bolts.

Figure 189
Type 3 ceiling to wall strap at pocket

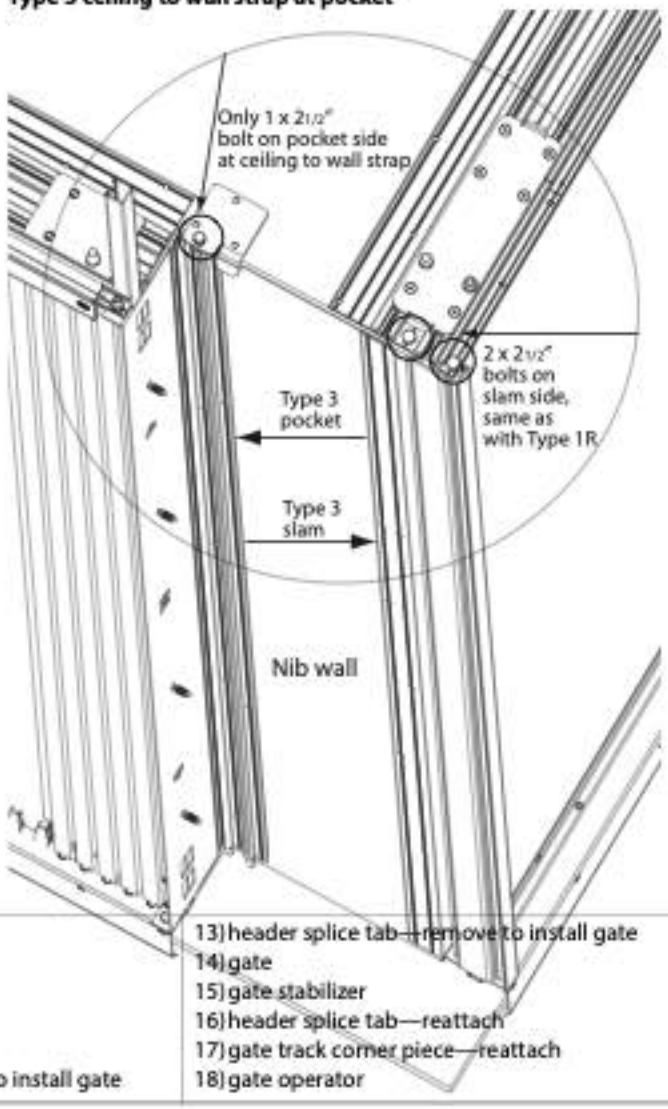

1) platform	7) ceiling	13) header splice tab—remove to install gate
2) COP wall	8) nib wall	14) gate
3) side wall	9) joiner channel	15) gate stabilizer
4) joiner channel	10) pocket	16) header splice tab—reattach
5) side wall	11) slam support	17) gate track corner piece—reattach
6) joiner channel	12) gate track corner piece—remove to install gate	18) gate operator

Figure 190
Type 3 floor to wall strap at pocket

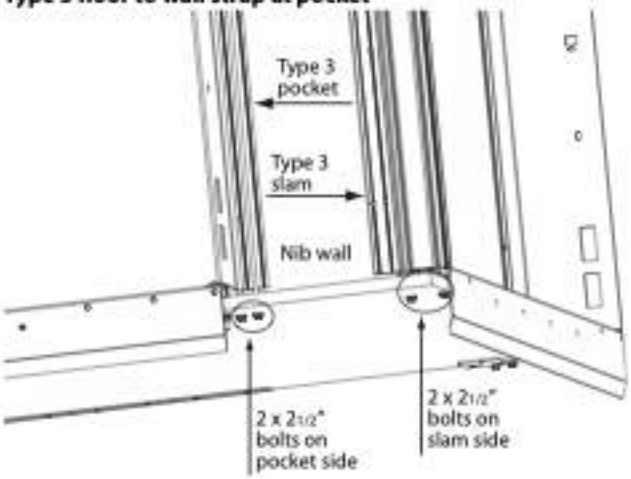

Type 1 right

Instructions in this guide are based on type 1R. Refer to type 1R cab installation instructions in this guide.

Type 1 left

A mirror image of type 1R, used in this guide. Refer to type 1R cab installation instructions in this guide.

Type 2

A combination of type 1L and type 1R.

Type 3

Includes an additional door with respect to type 1. See Figure 189 and Figure 190 on page 111.

Type 4

Similar to type 3 but a mirror image.

Type 5 center left hand small

Includes a nib wall, slam pocket, and channel joiner at the pocket. Like type 3, use only one bolt at the pocket from the ceiling to the strapping, and two bolts underneath the floor.

Type 5 center right hand small

A mirror image of type 5 center left hand small.

Type 5 center left

Includes two nib walls, a slam pocket, and one channel joiner per pocket. It is similar to Type 5 center left-hand small except the items shown in the FOLLOWING illustrations are on both sides of the entrance.

Type 5 center right

A mirror image of type 5 center left.

Type 5 left

Includes one nib wall, no slam pocket, and one channel joiner at the pocket. Similar to Type 5 center left hand small except the items shown in the following illustrations are on both sides of the entrance.

Type 5 right

Mirror image of type 5 left.

Figure 191
Channel joiner at wall strap and pocket corner top

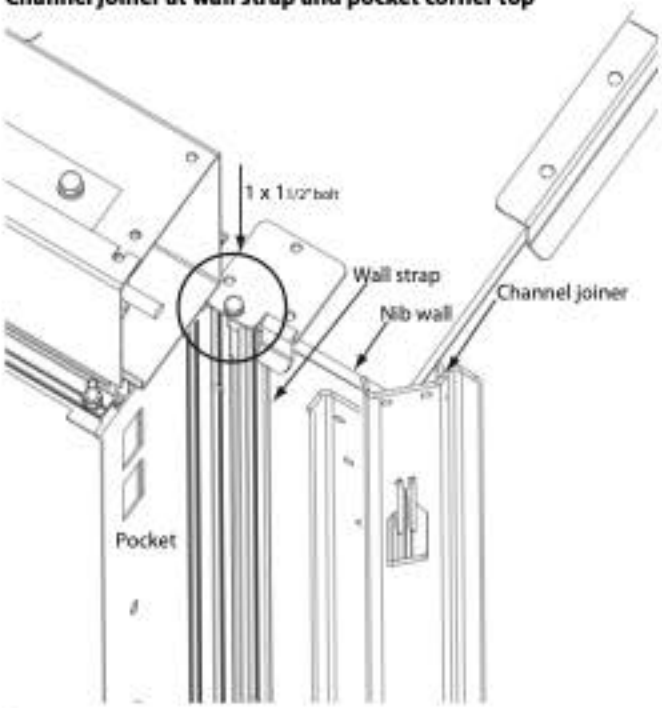

Figure 192
Channel joiner at wall strap and pocket corner bottom

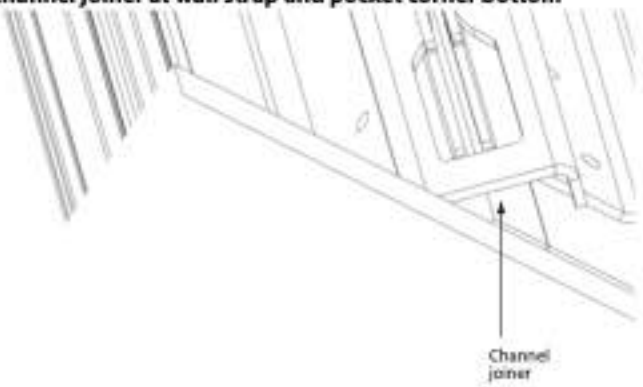

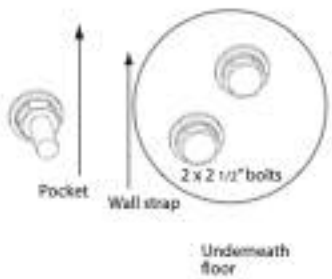

APPENDIX E: Savaria Link Option

For information on the Savaria Link option, refer to the following document:

- Savaria Link Installation and Setup Guide, P/N 00118

Appendix F
RATH 2400 Installation and Operation

System Requirements

TELCO Voltage: 48-52vdc on an analog line with at least 25mA of line current and valid dial tone. Line must be dedicated for a 2400 Series phone.

Getting Started

Carefully open the shipping box and remove contents. Inspect the phones for damage. If there is any damage, call 800-451-1460 immediately to arrange corrective action.

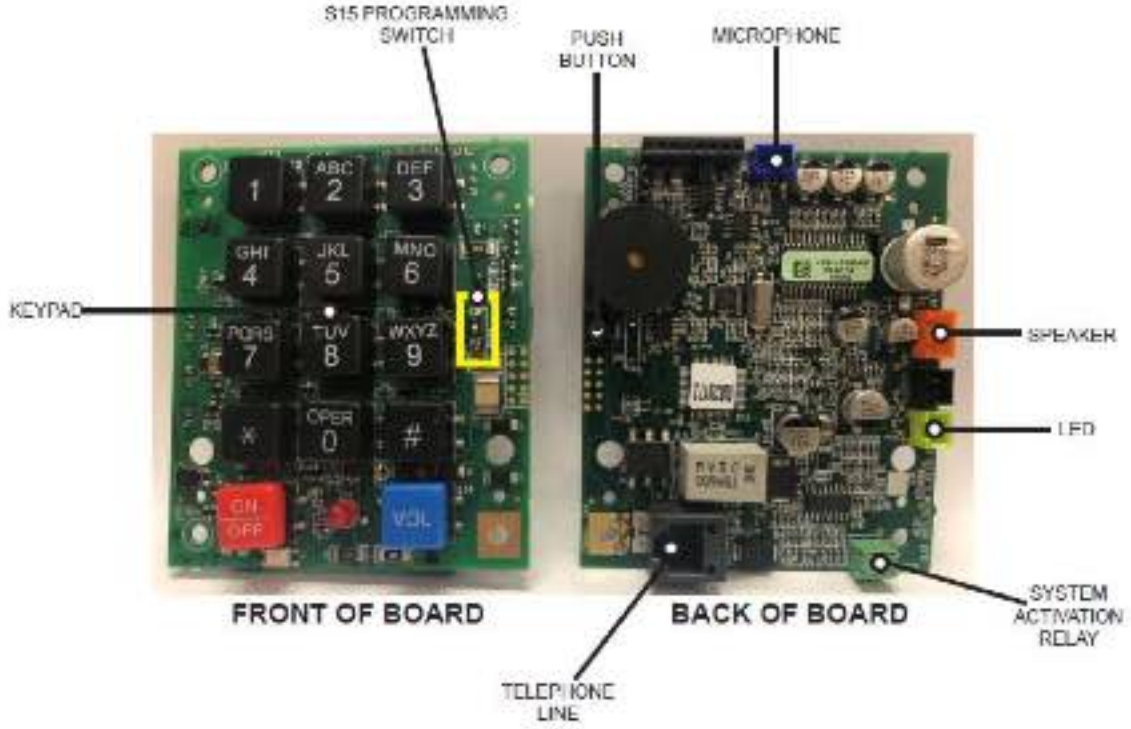

Line Connections

Connect a dedicated phone line to the RJ11 jack on the back of the 2400 Series phone board labeled TEL LINE using one of the following recommended methods:

1 Crimp the phone line on to the center pins of a standard RJ11 jack and plug into TEL LINE input on the back of the 2400 Series phone.

2 Connect the phone line to a female RJ11 jack then take the phone line cord provided with the 2400 Series phone from the jack to the TEL LINE input on the 2400 series phone.

3 Connect the phone line to a biscuit jack style connector. Screw the phone line onto red and green terminals on the back of the biscuit jack. Take the phone line cord provided with the 2400 Series phone from the biscuit jack to the TEL LINE input on the back of the 2400 Series phone.

RATH® phones use the center pins of the RJ11 (red and green) for the outside phone line. Phone is not polarity sensitive.

Note: Do not cut off the end of the phone line cord and splice the phone line directly onto the line cord.

It is recommended that the wiring used inside the traveling cable or horizontal cabling is a 20 - 22 AWG twisted shielded pair with the shield grounded at the elevator

controller end only. This will help reduce or eliminate any possible interference.

The phone line can be checked through the 2400 Series phone by pressing the **ON/OFF** button on the keypad.After pushing the **ON/OFF** button, the phone should have dial tone. Once the phone has dial tone, use the keypad to dial a number. Verify that the call connects and has two-way communication. Press the **ON/OFF** button again to end the call.

Quick Set-up

RATH® 2400 Series phones can only be programmed using the onboard keypad. When programming 2400 Series phones, it is imperative to move quickly through the programming due to many Telco systems providing limited off-hook time.

Program Number

1 Press the **ON/OFF** button (phone should give a dial tone)
2 Slide the S15 switch down into "ON/PROGRAM" position
3 Press **1, *,** the number you want the phone to dial, blue **VOL** key

Program Message

1 Press **7, *, 2** for message to play twice
2 Press **4, *** (phone will start beeping), speak message when beep ends, press blue **VOL** key when finished speaking (message will playback automatically)
3 Slide S15 switch back up into "1" position
4 Press the **ON/OFF** button to turn the phone off

Detailed Programming

Programming Primary Phone Number:

1 Press the **ON/OFF** button (phone should give a dial tone)
2 Slide the S15 switch down into "ON/PROGRAM" position
3 Press **1, *,** the number you want the phone to dial, blue **VOL** key
4 Slide the S15 switch back up into "1" position
5 Press the **ON/OFF** button to turn the phone off

Note: In situations where a delay is needed, such as needing an 8 or 9 to dial out, use the **ON/OFF** button on the keypad for a pause. The button can be pressed multiple times for more of a delay. One PAUSE = 1 second.

Programming Secondary Phone Number:

1 Press the **ON/OFF** button (phone should give a dial tone)
2 Slide the S15 switch down into "ON/PROGRAM" position
3 Press **2, *,** the number you want the phone to dial, blue **VOL** key
4 Slide the S15 switch back up into "1" position
5 Press the ON/OFF button to turn the phone off

Note: In situations where a delay is needed, such as needing an 8 or 9 to dial out, use the **ON/OFF** button on the keypad for a pause. The button can be pressed multiple times for more of a delay. One PAUSE = 1 second.

Programming Location Message:

RATH® phones can play a location message when the call is answered. This feature is used when the phone is calling a phone number that cannot identify where the call is coming from by caller ID, or needs more location information than caller ID can provide. This feature is turned on by default. Perform the following steps to program the location message feature.

Turning Location Message ON:

1 **Press the ON/OFF button (phone should give a dial tone)**
2 Slide the S15 switch down into "ON/PROGRAM" position
3 Press **7, *, (1, 2, or 3)** (1 will play message once, 2 will play message twice, 3 will play message on a loop until the operator presses the **#** key 4 times)
4 Press **4, *** (phone will start beeping), speak message when beep ends, press blue **VOL** key when finished speaking (message will playback automatically)
5 Slide S15 switch back up into "1" position
6 Press the ON/OFF button to turn the phone off

Turning Location Message OFF:

1 Press the **ON/OFF** button (phone should give a dial tone)
2 Slide the S15 switch down into "ON/PROGRAM" position
3 Press **7, *, 0**
4 Slide the S15 switch back up into "1" position
5 Press the **ON/OFF** button to turn the phone off

Note: The answering party can replay the message anytime by pressing ***, ***.

Resetting the Phone:

The phone can be reset by performing the following steps:
1 Press the **ON/OFF** button (phone should give a dial tone)
2 Slide the S15 switch down into "ON/PROGRAM" position
3 Press **9, *, 7, 2, 8, 4**
4 Press **5, *, 1**
5 Slide the S15 switch back up into "1" position
6 Press the **ON/OFF** button to turn the phone off

Note: Resetting the phone will not clear out any programmed numbers or messages.

Programming Talk Timer:

Talk Time is the amount of time that two-way communication will occur after a call is answered. When

Talk Time expires, the phone will hang up and the button on the phone will need to be pushed again to re-establish a call.

1 Press the **ON/OFF** button (phone should give a dial tone)
2 Slide the S15 switch down into "ON/PROGRAM" position
3 Press **6, *,** 3 digit number in minutes (3 minutes = 003, 20 minutes = 020)
4 Slide the S15 switch back up into "1" position
5 Press the **ON/OFF** button to turn the phone off

Note: The lowest Talk Time can be set to is 1 minute. The longest is 999 minutes.

Programming Auto Answer:

Auto Answer allows the 2400 Series phone to answer if called without someone needing to push the call button.This feature is required by code. By default, all 2400 Series phones are manufactured with Auto Answer enabled.This feature should only be turned off in a home or private elevator application.

1 Press the **ON/OFF** button (phone should give a dial tone)
2 Slide the S15 switch down into "ON/PROGRAM" position
3 Press **8, *, 1 or 2** (1 is ON, 2 is OFF)
4 Slide the S15 switch back up into "1" position
5 Press the **ON/OFF** button to turn the phone off

Volume Adjustment:

If the voice of the person you call is not loud enough in the phone speaker, increase the volume by pressing theON/OFF button. When the phone has dial tone, press the blue VOL button. Each time you push the VOL button, the volume will go up or down one level. 2400 Series phones have three volume levels: high, medium, and low.When desired volume level is reached, push the ON/OFF button to save the change.

Troubleshooting

Phone will not let you get through programming:

- Program the phone while it is on an active call:

1 Press the **ON/OFF** button
2 Call your cell phone number and answer the call
3 Slide the S15 switch down to "ON/PROGRAM" position
4 Perform the desired programming steps on the 2400 Series phone keypad
5 Slide the S15 switch back to "1" position
6 Press the **ON/OFF** button on the 2400 Series phone (this will also hang up the call on your cell phone)

- Verify the voltage on the phone line meets the minimum needed for the phone. See the "System Requirements" section for voltage range.
- Exit programming mode and re-enter. Attempt programming steps again.

Phone does not call out:

- Verify the voltage on phone line and dial tone. Phone lines can have voltage but no dial tone. 2400 Series phones must have dial tone or a valid ring down circuit to call out properly.
- Verify the push button is connected to the "PANIC" connector on the back of the circuit board.
- Remove the push button from the black "PANIC" connector on the circuit board. Use a small piece of wire or a small screwdriver to short 2 pins inside of the connector on the circuit board. If the phone calls out after shorting pins on the circuit board, there is a problem with the push button.
- Double check the number being programmed into the 2400 Series phone. Verify the phone line doesn't require an access digit such as an 8 or 9 to dial out or have any line restrictions such as long distance or toll restriction.
- Verify the phone line going into the 2400 Series phone is dedicated. 2400 Series phones cannot share a phone line with anything other than another 2400 Series phone.
- Verify phone is in Standard Mode. See "Resetting the Phone" section for instructions.

Phone does not hang up:

- 2400 Series phones require either a CPC or Open-Loop Disconnect Signal provided by the phone line to properly disconnect. This is a setting on the line that the phone provider should be able to supply.
- Before the receiving party hangs up the call, they can press ***, #** to disconnect.
- Lower the Talk Time on the phone. This will not hang up the phone instantly, but it will lower the amount of time the phone will stay off-hook. See the "Detailed Programming" section for instructions.

Phone hangs up after the call is answered:

- Phone may be in the wrong mode. Verify the phone is in Standard Mode. See "Resetting the Phone" section for instructions.
- There may be excessive noise on the phone line. Connect an analog phone to the line and place a call out. Listen for any interference (buzzing, humming, etc.) on the line. If any noise is heard, the phone line must be cleaned up.
- Verify the phone line going into the 2400 Series phone is dedicated. 2400 Series phones cannot share a phone line with anything other than another 2400 Series phone.

Phone volume is too low:

- The volume level on the phone may need to be increased. See the "Volume Adjustment" section for instructions.
- Line voltage and line current on the phone may be too low. See the "System Requirements" section for the appropriate range.
- Verify the speaker is lined up with the holes on the panel and is not blocked.
- Verify the microphone is lined up with the holes on the panel and is not blocked.

THIS PAGE WAS INTENTIONALLY LEFT BLANK

Zenith
Residential Elevator
INSTALLATION GUIDE

Part No. 001235, Rev. 035
© Copyright 2024

www.savaria.com

Support
2 Walker Drive
Brampton, Ontario, L6T 5E1, Canada
Toll free (800) 791-7999
Fax: (905) 791-2222

savaria