

Savaria® Pegasus

Inclined Platform Lift

Planning Guide

savaria

Applicable Codes:

ASME A17.1
CAN/CSA B355
ASME A18.1
CAN/CSA B613

Purpose of This Guide

This guide assists architects, contractors, and lift professionals to incorporate the Savaria Pegasus Planning Guide Automatic Door Opener into a residential or public building design.

The design and manufacture of the Savaria Pegasus Planning Guide Automatic Door Opener meets the requirements of the following codes and standards:

- ASME A18.1-2003 Section 3 (Public)
- ASME A18.1-2005 Section 3 (Public)
- ASME A18.1-2008 Section 3 (Public)
- ASME A18.1-2011 Section 3 (Public)
- ASME A18.1-2014 Section 3 (Public)
- ASME A18.1-2017 Section 3 (Public)
- ASME A18.1-2003 Section 6 (Private)
- ASME A18.1-2005 Section 6 (Private)
- ASME A18.1-2008 Section 6 (Private)
- ASME A18.1-2011 Section 6 (Private)
- ASME A18.1-2014 Section 6 (Private)
- ASME A18.1-2017 Section 6 (Private)
- ASME A17.1-1996 Section 20 (Public)
- ASME A17.1-1996 Section 21 (Private)
- CAN/CSA B355 S1-02 (Public)
- CAN/CSA-B355-09 (Public)
- CAN/CSA-B355-15 (Public)
- CAN/CSA-B355-19 (Private)
- CAN/CSA B613-2000 (Private)

We recommend that you contact your local authority having jurisdiction to ensure that you adhere to all local rules, regulations and fire regulations pertaining to inclined platform lifts.

IMPORTANT: This Planning Guide provides nominal dimensions and specifications useful for the initial planning of an inclined platform lift project. **Dimensions and specifications are subject to change without notice due to continually evolving code and product applications.**

Before beginning actual construction, please consult Savaria or the authorized Savaria dealer in your area to ensure you receive your site-specific installation drawings with the dimensions and specifications for your project.

Visit our website for the most recent drawings and dimensions.

How to Use This Guide

1 Determine your client's intended use of the lift.
2 Determine the local code requirements.
3 Determine the site installation parameters.
4 Plan for electrical requirements.

Revision History of This Guide

July 31, 2025 - Initial release
November 25, 2025 - Revised drawing on page 10
March 12, 2026 - Specified regional code application
May 1, 2026 - Revised document throughout

Copyright © 2025
Savaria Concord Lifts, Inc.
All rights reserved.

Table of Contents

Product Elements Diagram 5
- Mini Drive Unit 6
- Overspeed Governor (bottom landing) 6
- Lift Controls 6
- Call Station 7
- Uninterrupted Power Supply 7
- Guide Rails 8
- Wall Height Requirements for Direct Mounting 9
- How the system works 10

Technical Specification 11
Features 12
Site Verification 13
Electrical Requirements 14
Structural Requirements 14
Drawings 15

Description of the lift

The Savaria Pegasus Planning Guide Inclined Platform Lift is an accessibility device used to provide access over multiple levels of straight stairs, stairs with intermediate landings, or stairs with turns.

The lift will transport a passenger either sitting in a wheelchair or on the manual folding seat.

The unit travels along the guide rails at a comfortable speed up to 14 feet per minute (0.07 metres per second).

The unit is driven by a rope traction drive system. The standard drive unit is mounted on the rail at the top of the stairs for rail lengths under 20 metres (65.6 feet) or in an optional drive cabinet for rail lengths over 20 metres (65.6 feet).

The Savaria Pegasus Planning Guide is easy to operate using the on-board pendant control. When the lift is not in use, it can be parked and folded up allowing access to the stairs.

The Savaria Pegasus Planning Guide is suitable for either indoor or outdoor use, and can be factory-built for left- or right-side rail installations.

Features and benefits

- Major building renovations are usually not required as the Savaria Pegasus Planning Guide is installed on a modular guide rail system that follows along an existing stairway. The rails will be securely fastened to a supporting wall, the stairs, or both.
- The space-saving design of the platform and the rail system allows the platform to fit into narrow staircases.
- The lift can be parked at the top or bottom of the staircase.
- A tight turning radius is possible.
- Inside or outside curve installations are accommodated.
- The lift platform is ADA-compliant.
- A compact standard drive is installed at the top of the rail system. An optional larger drive cabinet can be used for longer runs over 20 metres (65.6 feet).
- The rope traction drive system allows for longer installation runs.
- A robust platform motor operates folding and unfolding of the platform, arms and ramps.

Product Elements Diagram

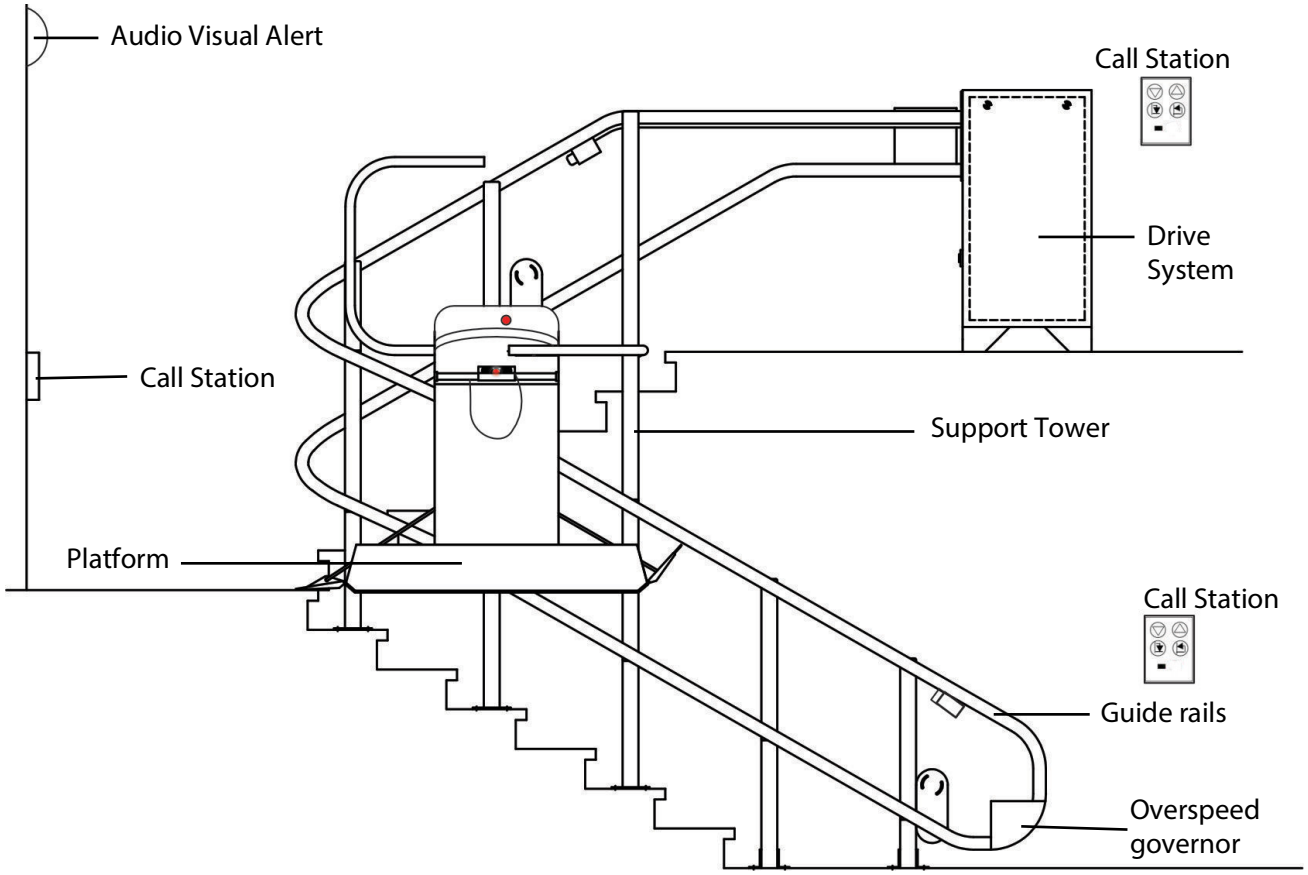

Figure 1: Curved

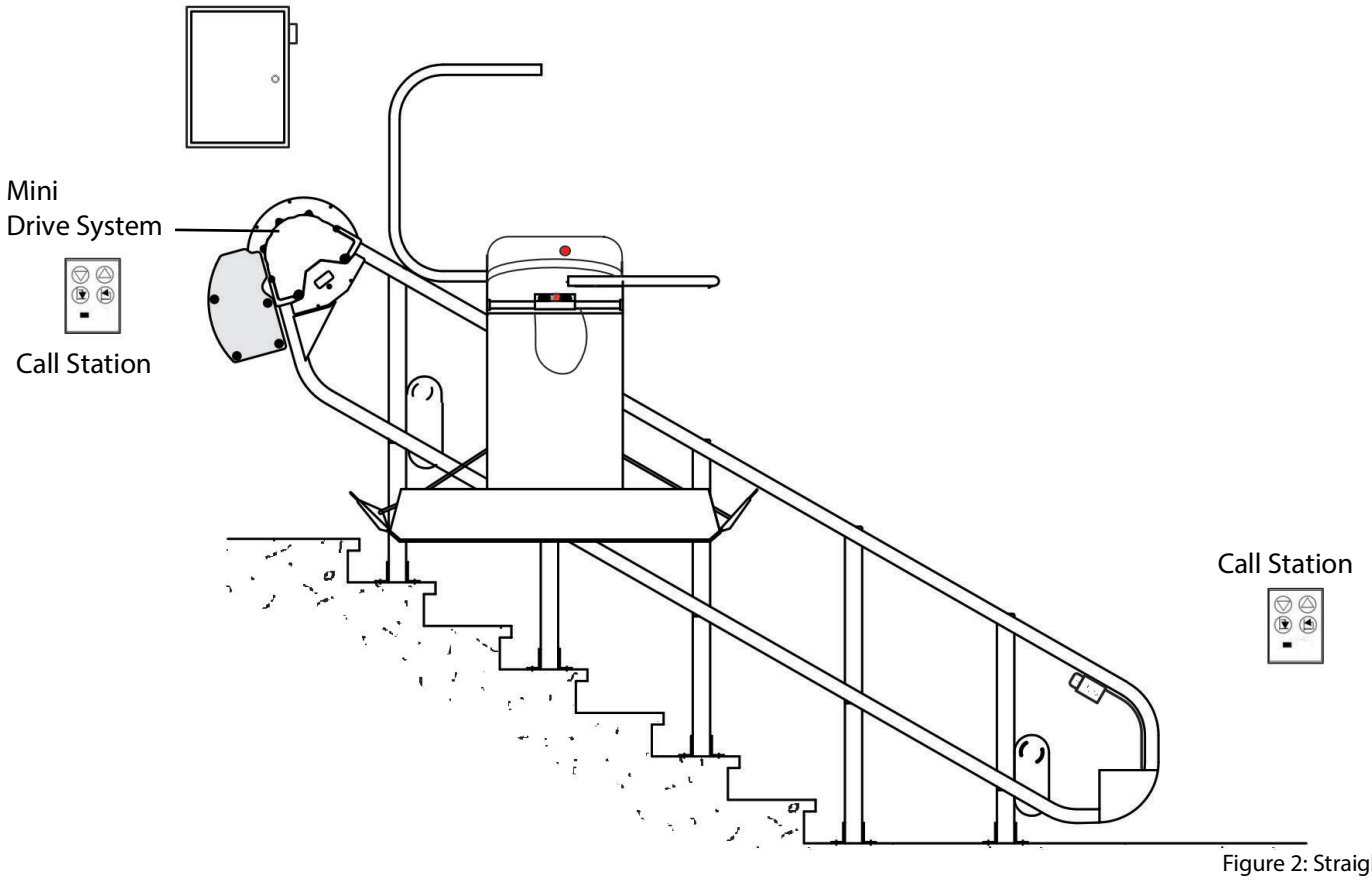

Figure 2: Straight

Mini drive unit with remote controller box (top landing)

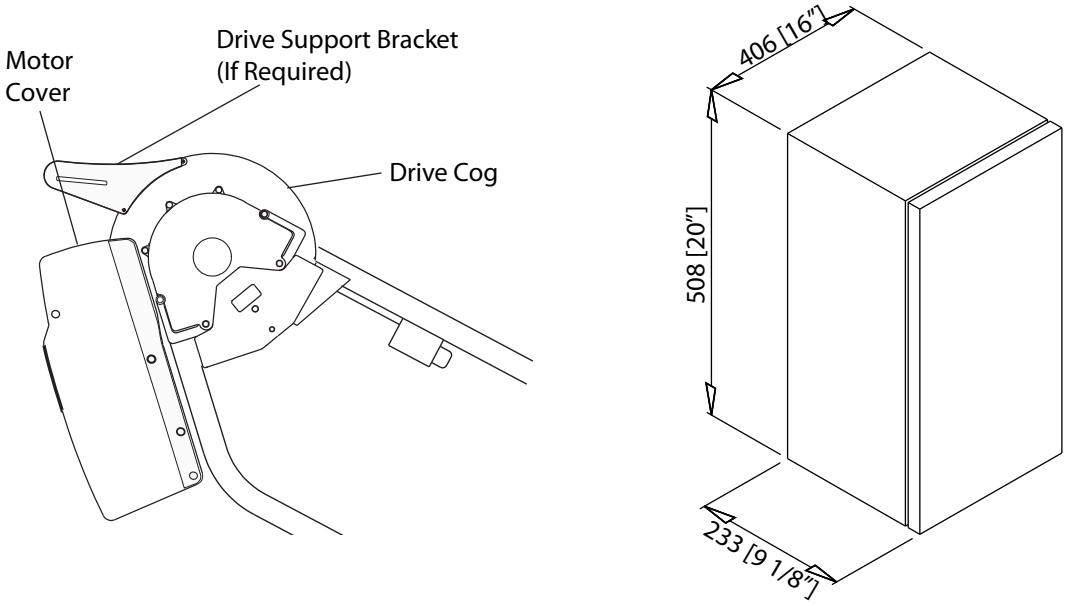

Figure 3: Mini drive unit with remote controller box (top landing)

Overspeed governor (bottom landing)

The overspeed governor is a safety device located at the lower end of the rail. It consists of an electrical switch and a mechanical device that activate together to stop the platform from moving if it is descending down the stairs too quickly.

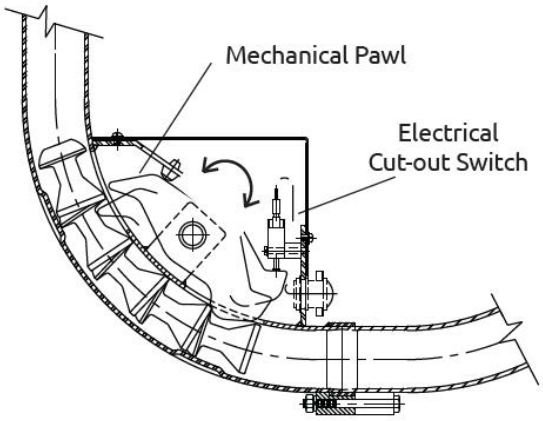

Figure 4: Overspeed Governor

Lift controls



Figure 5: Pendant Controls with Emergency Stop Button

Call station

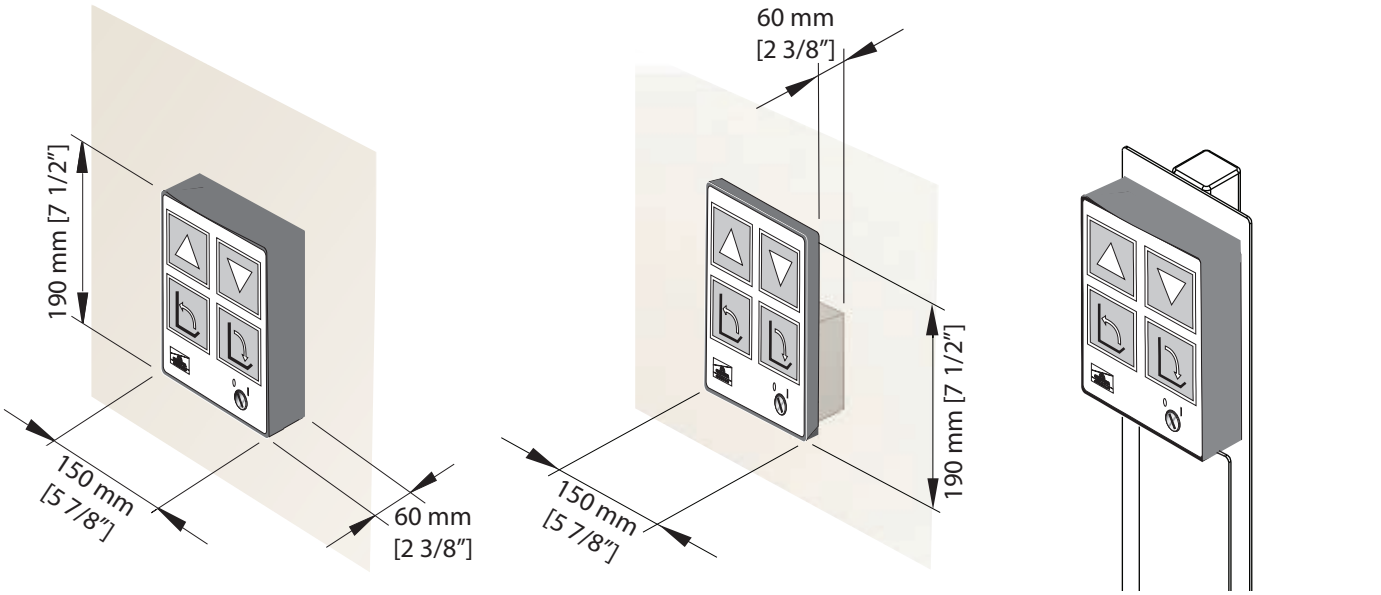

Figure 6: Surface mount (Left), Flush mount (Middle) and Free Standing (Right, Optional pedestal)

Uninterrupted Power Supply (UPS, Optional)

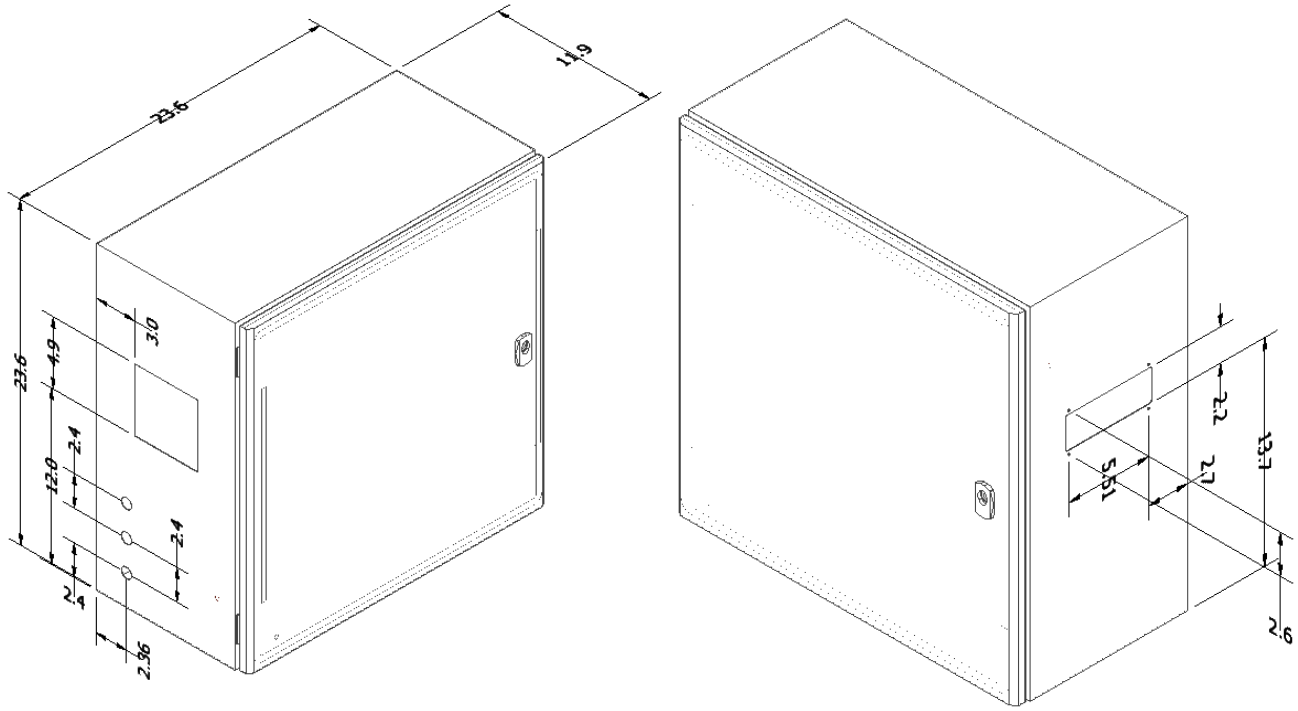

Figure 7: Uninterrupted Power Supply (UPS, Optional)

Guide rails

The lift travels up and down the stairway along two guide rails – an upper rail and a lower rail. The mounting location of the rails depends on the platform size and the angle of the stairs.

If the angle of the stairs is less than 20 degrees, a third rail (horizontal stabilizer rail) is required to stabilize the platform. Horizontal rail sections may be required at half-landings or stop positions. A sample horizontal rail installation is shown below.

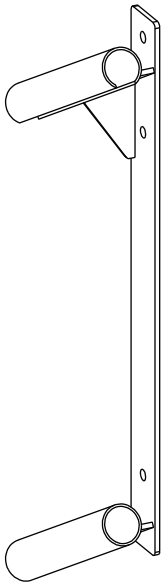

Direct Mount Strut

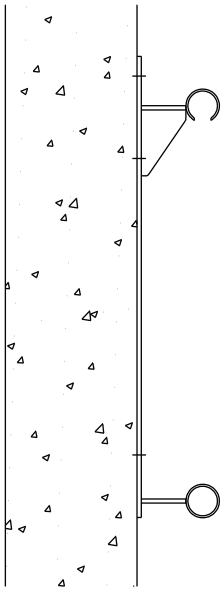

Direct Mount
Solid Wall

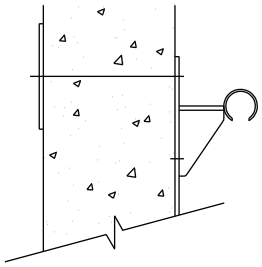

Weak Wall Structure
(Requires Through Bolt)

Figure 8: Direct Mount Struts

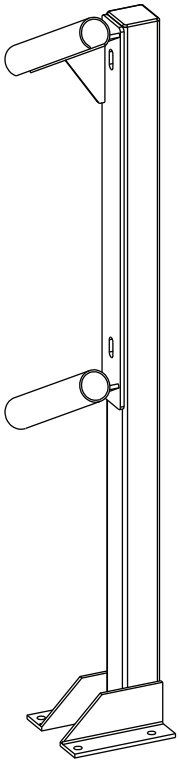

Tower Mount

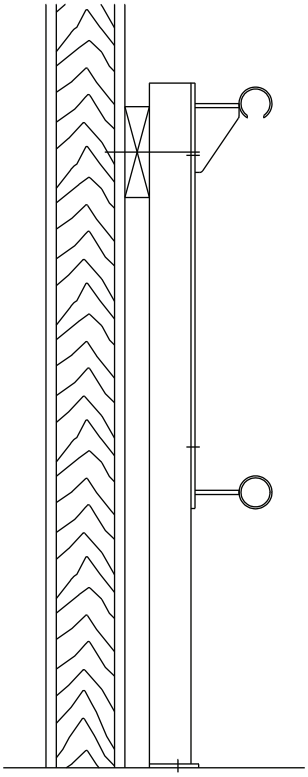

tower mount to 2x6
board on wall

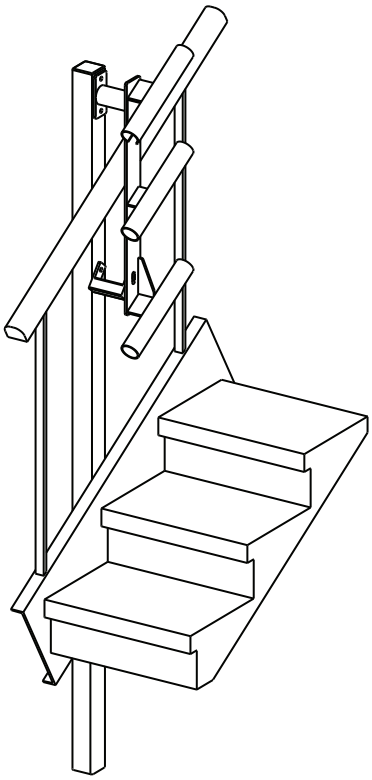

Tower mount in
Open Balustrade

Figure 9: Freestanding

Wall Height Requirements for Direct Mounting

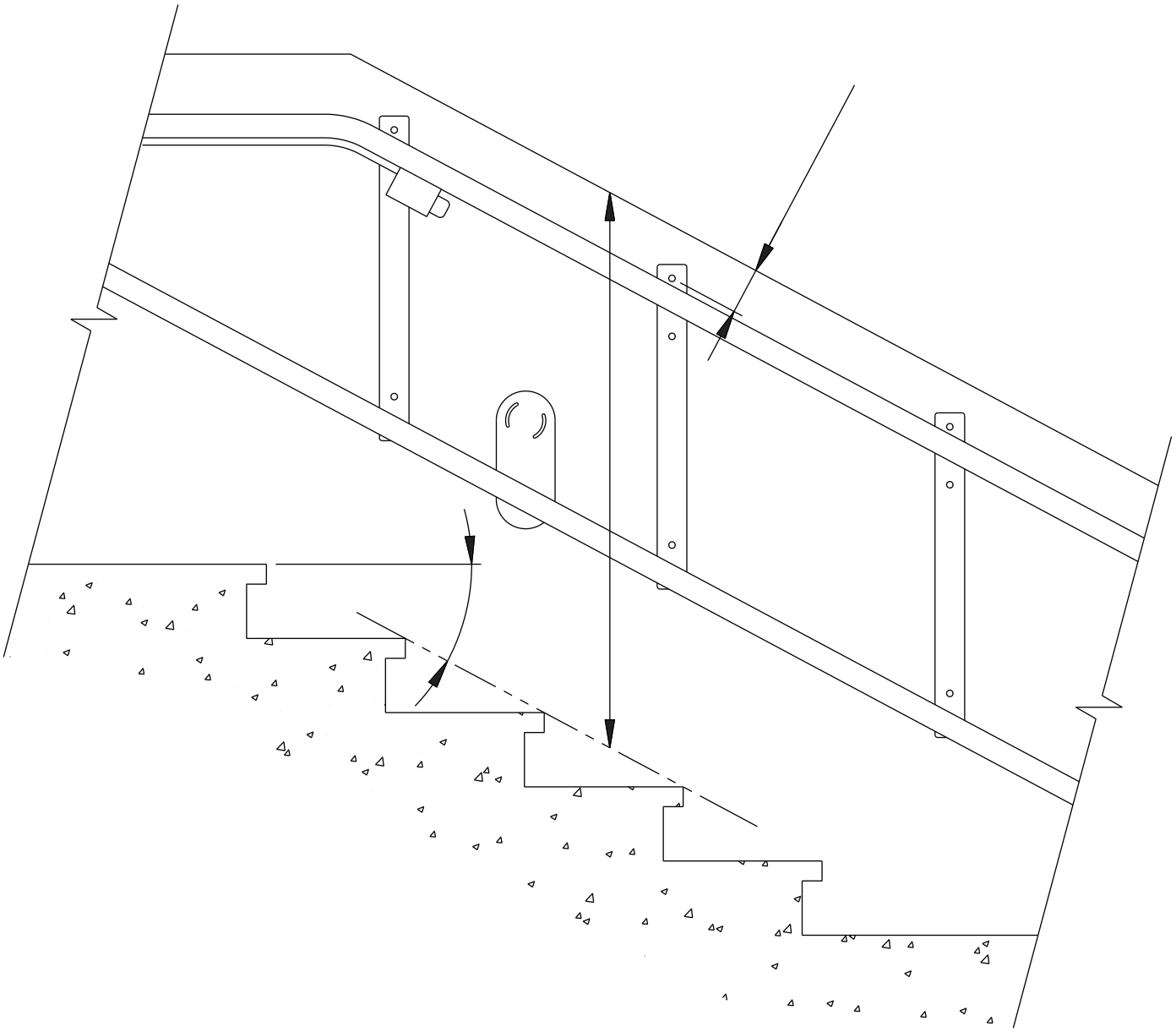

Figure 10

Platform Sizes								
Stair Angle	800 x 1220 mm (31 1/2" x 48")		800 x 1050 mm (31 1/2" x 48")		800 x 900mm (31 1/2" x 35 3/8")		700 x 750 mm (27 1/2" x 29 1/2")	
	mm	in	mm	in	mm	in	mm	in
22°	1155	41 1/2	1125	44 1/4	1095	43 1/8	1055	41 1/2
25°	1230	48 3/8	1190	46 7/8	1155	45 1/2	1100	43 1/4
30°	1315	51 3/4	1270	50	3225	48 1/4	1155	45 1/2
35°	1410	55 1/2	1355	53 3/8	1300	51 1/8	1215	47 7/8
40°	1520	59 7/8	1450	57 1/8	1385	54 1/2	1285	50 5/8
45°	1645	64 3/4	1560	61 3/8	1485	58 1/2	1365	53 3/4

How the system works

The Savaria Pegasus Planning Guide carriage/platform assembly travels along a guide rail system that is custom designed for each site. This railway consists of an upper tube and a lower tube that houses a continuous loop of rope. The drive system moves the carriage/platform assembly up and down the stairs by means of this rope.

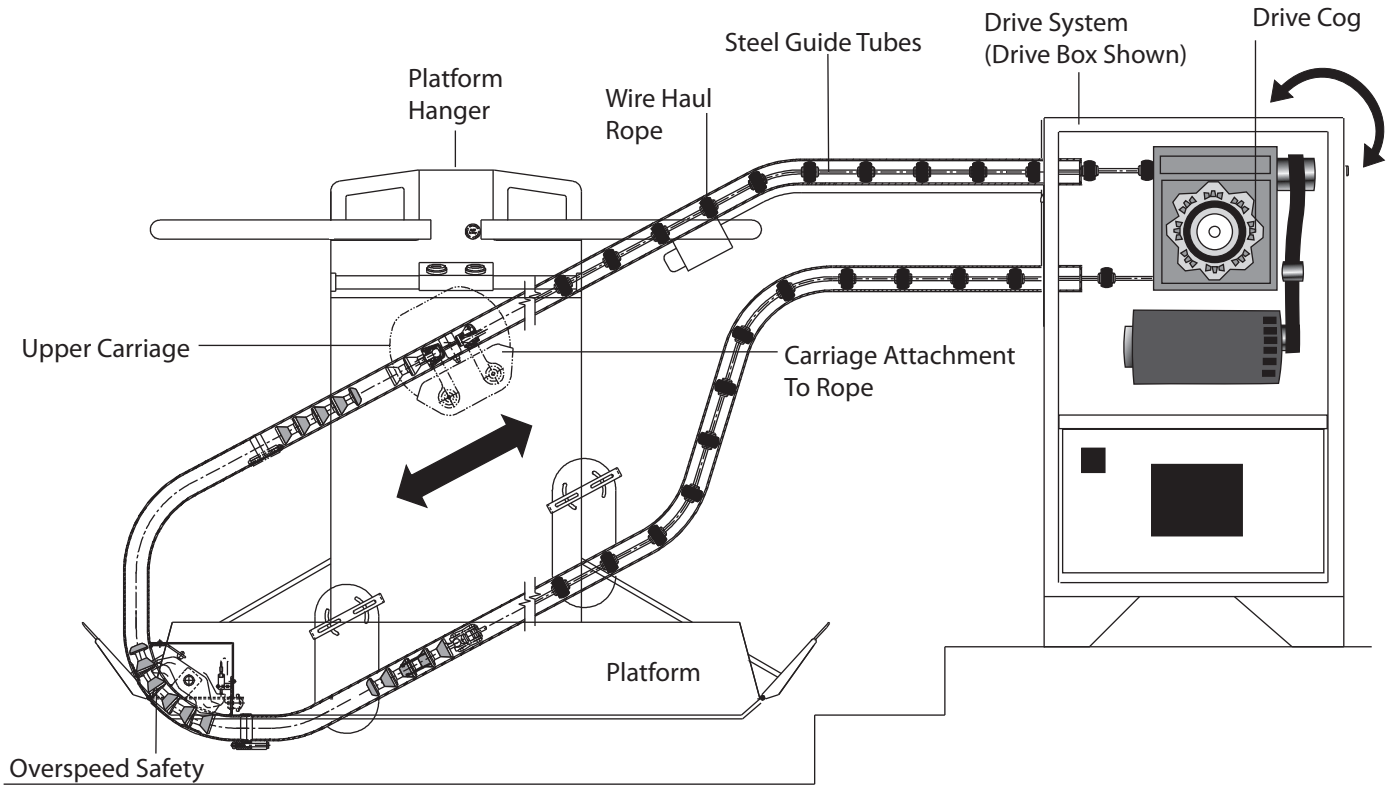

Figure 11

Technical Specifications

Specification	Specification Data
Maximum load	660 lb (300 kg)
Gradient	45° - Public 55° - Residential
Capacity	One person in wheelchair or sitting on manual folding seat; seat capacity is 330 lb (150 kg)
Platform sizes	48" x 31.5" (1220 mm x 800mm) 41.375" x 31.5" (1050 mm x 800mm) Custom platform sizes
Travel speed	20 ft/min (0.06m/2) on straight sections 10 ft/min on turns and landings
Maximum travel	164 f (50 m)
Minimum travel	8 in (20 cm)
Temperature	32 °F to 104 °F (0 °C to +40 °C) **NOTE:** *It is important to keep the inside of the upper tube free of ice to ensure proper contact to the current collector.*
Noise level (for typical installation)	
Power supply	208-240 VAC (+/-5%), 50-60Hz, single phase on a dedicated 16-20 amp circuit
Motor	2 hp (1.5 kW) drive
Daily cycle	Normal: 10 Heavy: 30 Excessive: 45 Maximum starts in 1 hour on standard installation: 5 **NOTE:** *Please consult your Sales Representative if there a chance you may exceed these amounts.*
control buttons	Two constant-pressure directional buttons Emergency STOP button to stop the lift in an emergency Audible alarm button to signal for help Key switch to enable use of the pendant control buttons
Standard features	Pendant control buttons (on platform) Constant-pressure type buttons Manual lowering capability (using handwheel) Limit switches No machine room required Emergency stop button Audio visual alarm (running buzzer and light) to indicate the unit is in use Manual folding seat (with seat belt)
Safety features	Edge sensors Underpan sensors Safety brake Safety arms Platform ramps Emergency stop button Limit switches Manual operation
Color	White (RAL 9003), Custom color (any RAL color)
Options	Exterior package (For outdoor applications, consult your local Savaria dealer as not all climates may be suitable for outdoor installations) Extra grabrail 90-degree ramp **NOTE:** *For the extra grabrail option to meet local code requirements, please confirm with the factory if it is feasible depending on the stair angle and platform size before final approval.*

Features

Obstruction sensors

During travel, the edges of the platform ramp and the carriage of the lift are protected by sensors which stop the lift if it touches an obstacle.

There are also safety underpan sensors to detect an obstacle underneath the platform and carriage and stop the lift.

Safety arms and platform ramps

While in motion, the platform is protected by two safety arms. The platform is also protected by two side access ramps (and an optional front access ramp) which have the dual function of facilitating access to the lift at the floors (open position) and of retaining the wheelchair while the lift is in motion (safety position).

Before the lift leaves the floor, the safety arms must be down and the platform ramps must be up.

If the underpan or platform ramps encounter an obstacle as they move into position, a microswitch is tripped, stopping the lift. You can drive away from the obstacle in the other direction in order to remove the obstacle (bi-directional safeties).

Limit cams

The upper and lower limit cams allow the lift to stop automatically in the correct landing position at the upper or lower end of the staircase. If the upper or lower limit cam fails, the additional final safety limit switch stops the unit.

Emergency stop button

There is a red emergency STOP button located on the platform control panel and on the handheld pendant which can be pressed in an emergency to stop the lift.

Platform On-board alarm

When the Emergency Stop Button is activated it illuminates and an alarm located on the platform. The alarm will alert others that the passenger on the lift requires assistance.

Platform key switch

The key switch is located on the platform control panel and is used to activate/de-activate the platform pendant controls.

Landing light

The yellow landing light is mounted in view of each landing and the travel of the lift, either at the middle landing or in the middle of travel The landing light flashes to indicate that the unit is in use.

Overspeed governor (safety brake)

The overspeed governor is a safety device located at the lower end of the rail. It will activate to quickly bring the lift to a stop if it is descending down the stairs too quickly.

Manual lowering device

You can use the manual handwheel by inserting it on the motor shaft to bring the lift to the next landing in the event of an emergency. You can also use an electric drill with the provided adapter for faster lowering.

Uninterrupted Power Supply (Optional)

In the event of a power outage, the UPS is an optional feature that allow indoor units to run for an extended period of time.

Fire Alarm Integration (Fire Service)

The fire service feature is designed to interface with a building's fire safety system and interrupt power to the lift when the fire alarm sounds. This ensures the lift will not obstruct stairway traffic during evacuation. If the lift is in use when the alarm sounds, the lift will only allow the platform to travel to the designated landing with the emergency exit. The passenger must use the constant pressure direction button.

Site Verification

Stairway

Due to close running clearances, the Owner/Agent must ensure that the stairs (where provided) are level, plumb (+/-1/8" (3 mm)) and square and are in accordance with the dimensions specified on the site-specific plan drawings.

Minimum overhead clearance

The Owner/Agent must ensure the minimum overhead clearance is in compliance with codes.

Construction site

The Owner/Agent is responsible for all masonry, carpentry and drywall work as required, and for patching and finishing (including painting) all areas where walls/floors may need to be cut, drilled or altered in any way to permit the proper installation of the lift.

Dimensions

The Contractor/Customer must verify all dimensions on the site-specific plan drawings and report any discrepancies to the Agent or Distributor.

Installation

The equipment must be installed by a qualified technician in compliance with the codes identified on the front cover of this manual.

The conformity for access to the platform is the distributor's responsibility.

Provisions by others

IMPORTANT

Upon completion of installation when the back of the rail is exposed, infill panels must be installed between the support posts, or a constructed barrier or wall must be installed behind the rail (see the illustration below). This will prevent access to the back of the rail during operation.

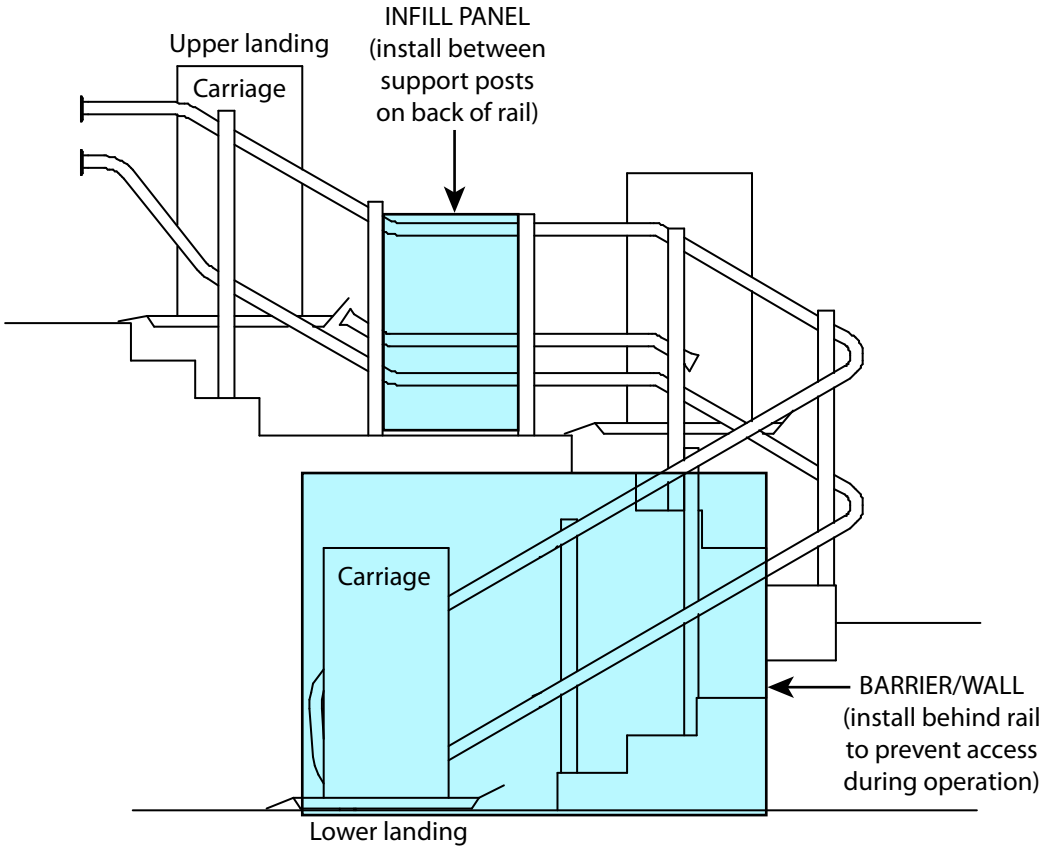

Figure 12: Radio-frequency remote control

Electrical requirements

General

Electrical equipment and wiring must comply with Section 38 of CSA C22.1 (Canada) or Section 620 of NEC ANSI/NFPA 70 (USA).

Main power supply

208-240 VAC, single-phase, 50/60 Hz, on a dedicated 20 amp circuit

Contractor/customer to provide two 14 AWG conductors plus GND conductor between the fused disconnect contact and the power supply box.

Lighting

Contractor/customer to provide lighting. Lighting must be a minimum of 100 Lux at the platform and landings, and must have a switch and electrical GFCI outlet.

Contractor/customer to provide emergency lighting. Emergency lighting of 2 Lux must be provided for a minimum of one hour on the platform along the travel route.

Structural requirements

Floor/support wall loads

A qualified professional must ensure that the building and stairway will safely support all loads imposed by the lift equipment. Adequate structural support must be provided at the top landing, bottom landing and throughout the supporting wall along the stairs.

The pull-out force on the supporting wall will vary depending on the type of rail mounting used (wall brackets or support). Refer to the previous illustration of the guide rail mounting configurations.

All wood studs in the supporting wall must be anchored in the ceiling and the floor to meet the pull-out force requirements. Wood studs must be placed at 16" (404 mm) centres (minimum), solidly anchored in the floor and ceiling.

The floor load will vary depending on the type of rail mounting used (wall brackets or support posts on the steps).

Where required, the rail must be securely fastened to the structural support wall.

Drawings

Support load diagram

Loads are based on an 800 x 1220mm (31 1/2" x 48") platform:

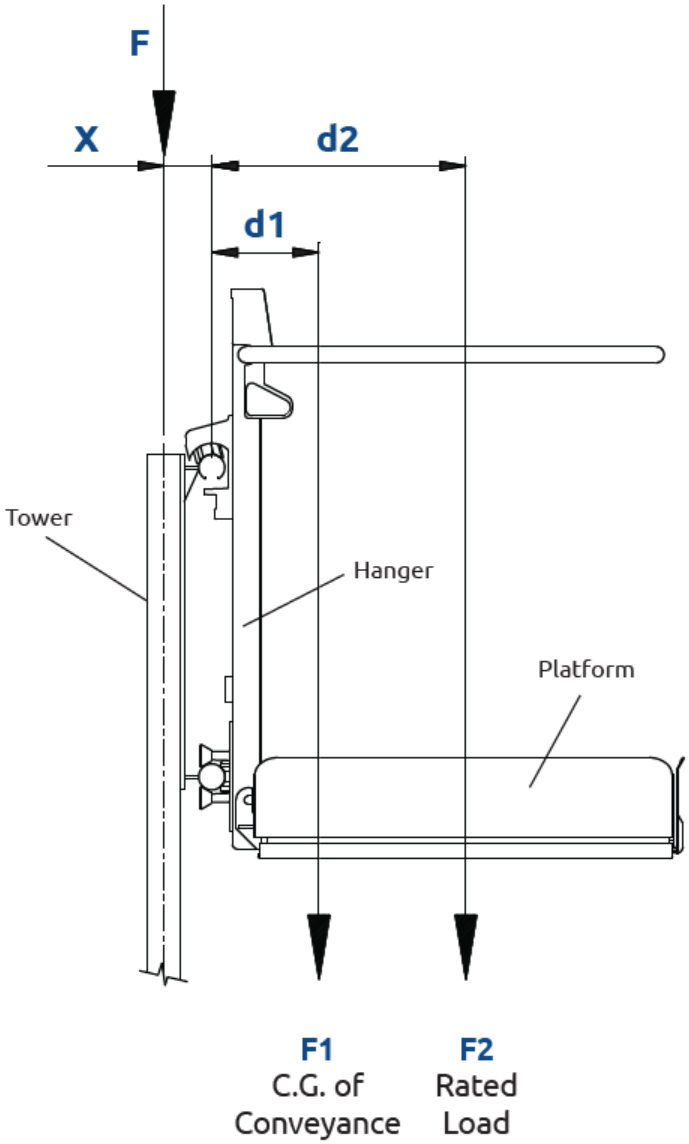

Figure 13

Specification	Straight Lifts Lifts With Inside Radius Bends	Lifts With Outside Radius Bends
	F1= 1093 N (246 lbf) **F2=** 2942 N (661 lbf) **d1=** 296mm (11 5/8") **d2=** 506mm (19 7/8")	**F1=** 1231 N (277 lbf) **F2=** 2942 N (661 lbf) **d1=** 341mm (13 3/8") **d2=** 606mm (23 7/8")
Moment At The Center Of Tower Or Back Of Direct Mount Strut	**M=** F x d (F: Force; d: distance) **M=** F1 x (d1 + X) + F2 x (d2 + X)	**M=** F x d (F: Force; d: distance) **M=** F1 x (d1 + X) + F2 x (d2 + X)
Tower Mount	**X** is 92mm (3 5/8") min. to 330mm (13") max.	**X** is 92mm (3 5/8") min. to 330mm (13") max.
Direct Mount	**X** is 100mm (4.0") min. to 140mm (5 1/2") max.	**X** is 100mm (4.0") min. to 140mm (5 1/2") max.
Maximum Moment (M)	3144 Nm (27827 in.lbf) with Tower Mount 2377 Nm (21041 in.lbf) with Direct Mount	3580 Nm (31682 in.lbf) with Tower Mount 2787 Nm (24664 in.lbf) with Direct Mount

Platform 1– 800 x 1220 mm (31.5 x 48"), sheet 1

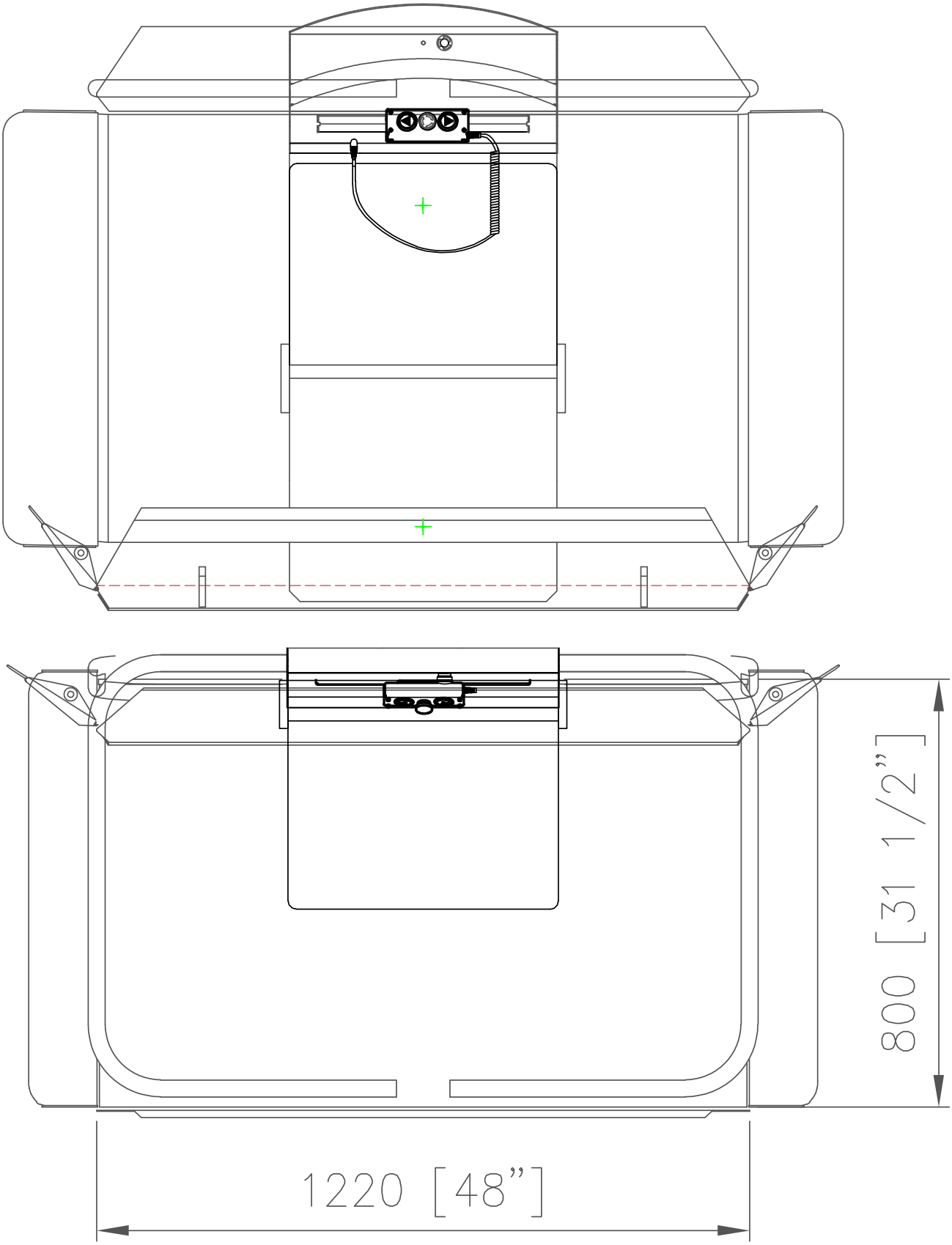

Figure 14

Platform 2 – 800x 1050 mm (31.5 x 41 3/8"), sheet 2

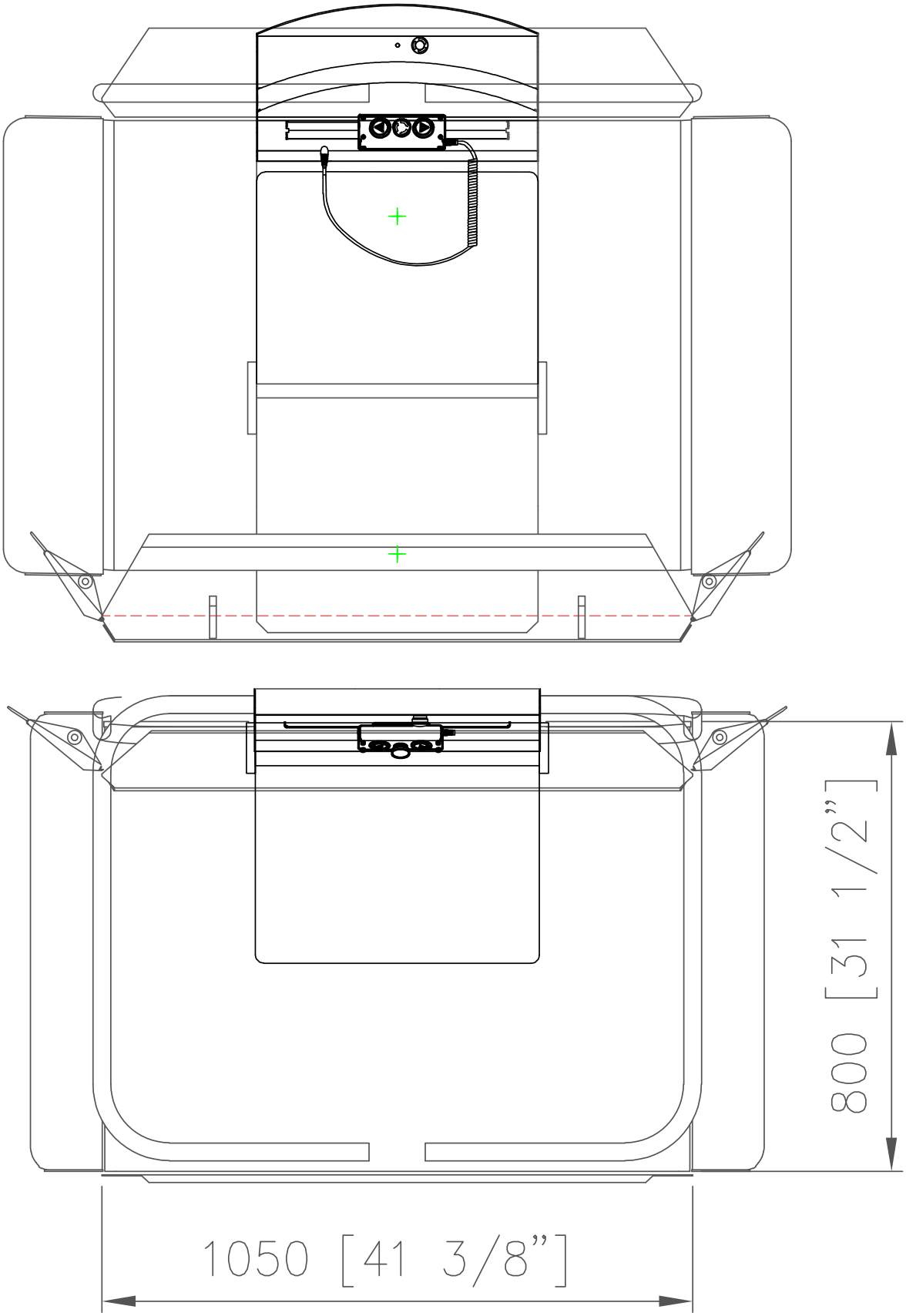

Figure 15

Lower landing Configuration

Straight Lower Landing

This configuration is used when there is adequate space to load/unload straight onto the platform at the lower landing. Side load function is also available in this configuration.

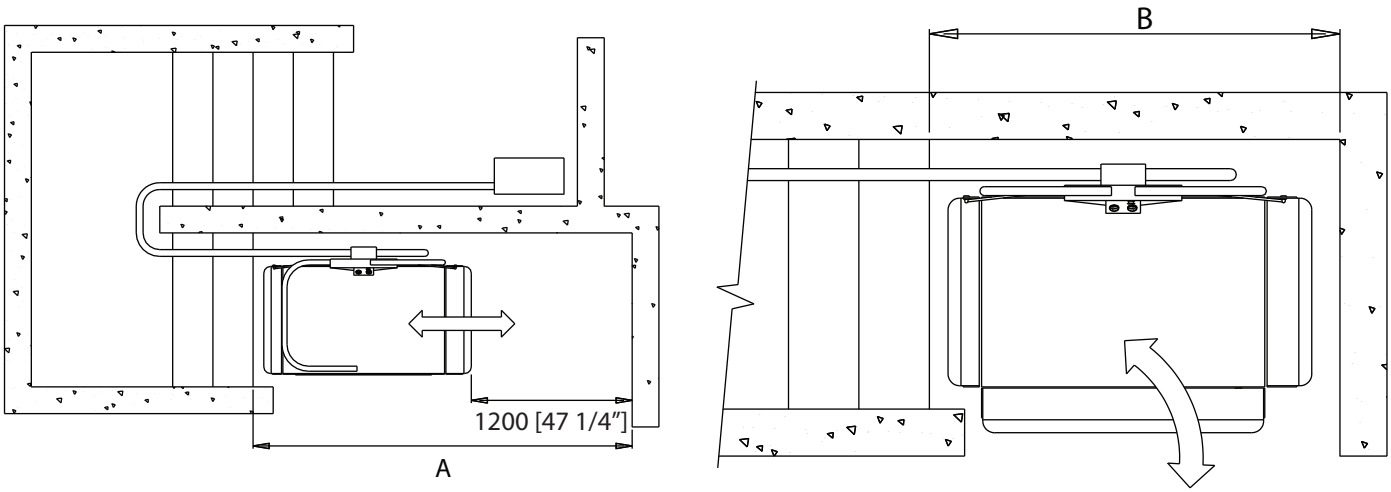

Figure 16

Drop-Down Landing

When lower landing space is limited, the lower landing section of the tubes are angled downwards at a 45 angle, allowing the platform to land as close to the bottom step as possible. This configuration is often combined with the side load feature.

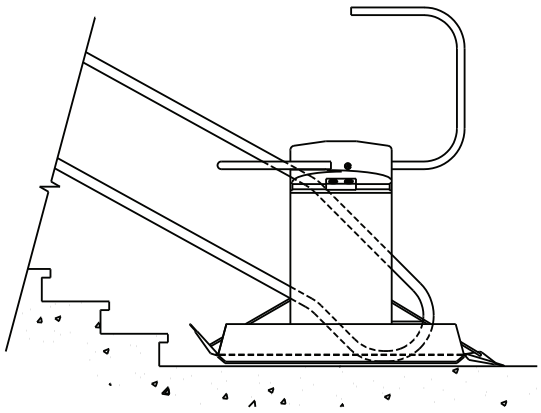

Figure 17

Straight Lower Landing for Compact Drive

The Rope Tensioning Device used with the compact drives requires a minimum clearance of 250 mm (9 7/8") from the end of the tubes to the nearest obstruction.

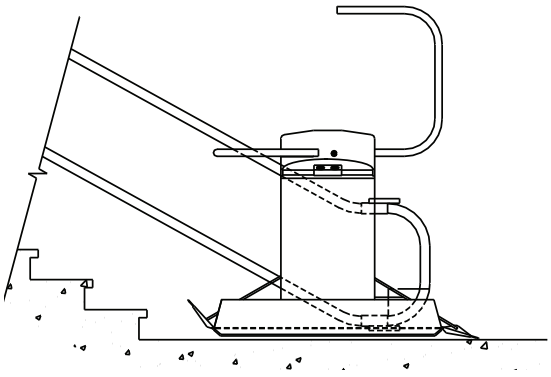

Figure 18

Lower Landing Clearance- 90 & 180 Start

90 and 180 Lower Landing

Places the platform away from pedestrian traffic while loading/unloading and storing the platform. Ideal for stairs with sufficient clearances such as stairways with alcoves, hallways or otherwise unused spaces under stairs.

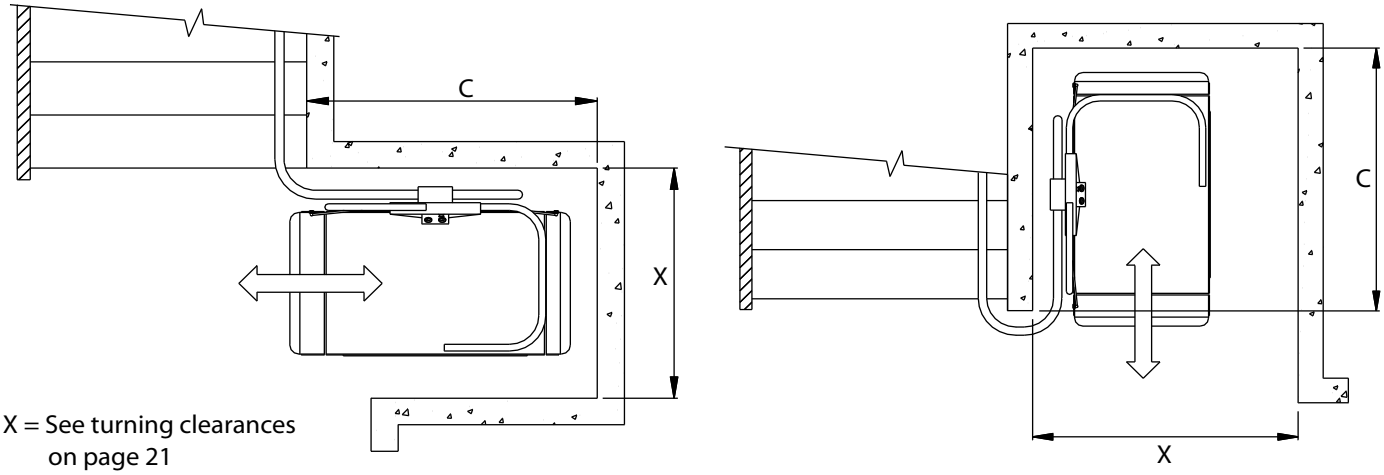

X = See turning clearances on page 21

Figure 19

Landing Over a flight

This enables the platform to be loaded/unloaded and stored over a flight of stairs that is not being serviced by the lift

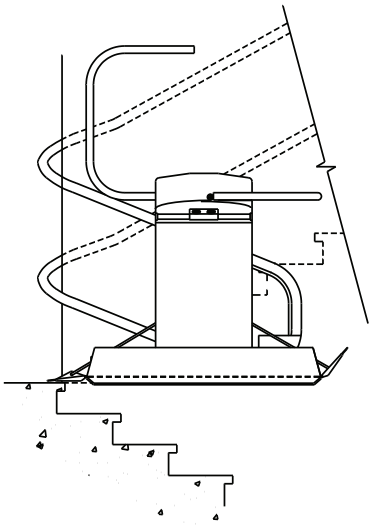

Figure 20

Lower Landing Clearances

Dimensions are based on standard platforms with standard ramps. Ramp extensions will increase the clearances required.

Platform Size	Dimension A	Dimension B	Dimension C
800 x 1220 mm (31 1/3" x 48")	2883 mm	1708 mm	1540 mm
	113 1/2 in	67 1/4 in	60 7/8 in
800 x 1050 mm (31 1/2" x 41 3/8")	2713 mm	1538 mm	1370 mm
	106 3/4) in	60 1/2 in	53 7/8 in

Minimum Overhead clearances

US Code (ASME A18.1)

1524mm (60") overhead clearance required to any point above the platform deck. Refer to Dimension B.

Canadian Code (CSA B355)

1500mm (59") overhead clearance required to the centerline of the platform. Refer to Dimension C

> **IMPORTANT**
> Consult the local Savaria representative for local code requirements.

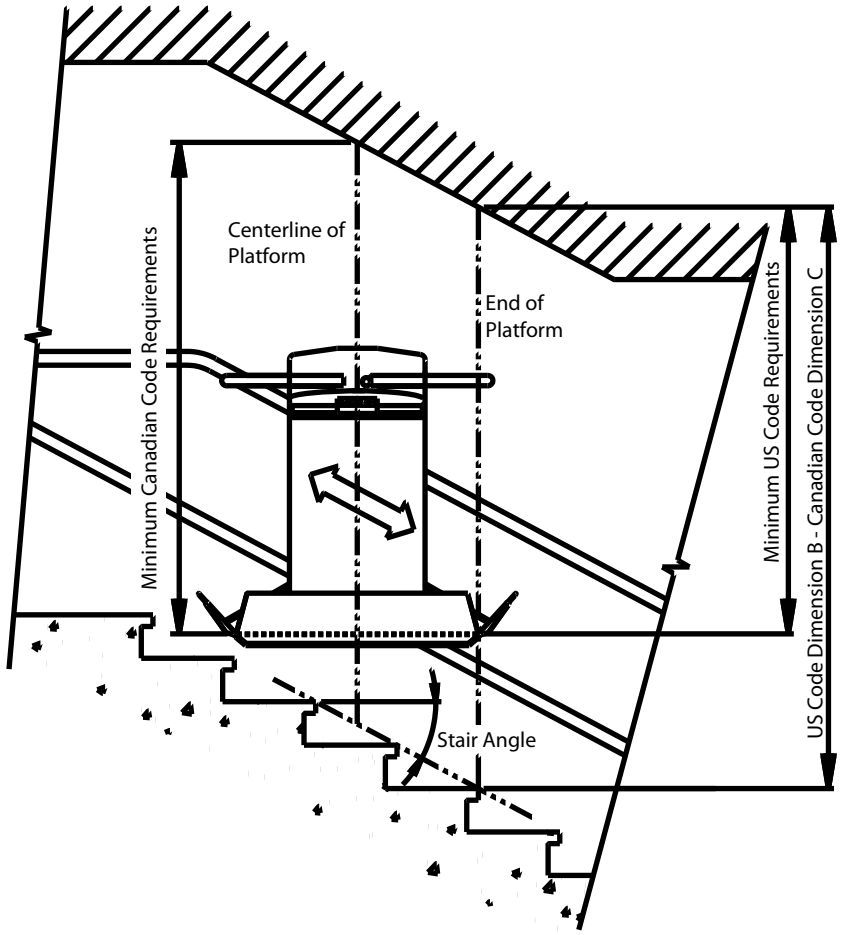

Figure 21

	Dimension A				Dimension B				Dimension C			
Stair Angle	Platform Sizes				Platform Sizes				Platform Sizes			
	800 x 1220 mm (31 1/2" x 48")		800 x 1050 mm (31 1/2" x 48")		800 x 1220 mm (31 1/2" x 48")		800 x 1050 mm (31 1/2" x 48")		800 x 1220 mm (31 1/2" x 48")		800 x 1050 mm (31 1/2" x 48")	
	mm	in	mm	in	mm	in	mm	in	mm	in	mm	in
22°	1560	61 3/8	1500	59	2086	82 1/8	2020	79 1/2	1820	71 5/8	1785	70 1/4
25°	1690	66 1/2	1610	63 3/8	2170	85 3/8	2090	82 1/2	1865	73 3/8	1825	72
30°	1825	71 7/8	1730	68 1/8	2320	91 3/8	2220	87 1/2	1945	76 5/8	1895	74 5/8
35°	2000	78 3/4	1880	74	2480	97 5/8	2365	93 1/8	2030	79 7/8	1970	77 1/2
40°	2215	87 1/4	2070	81 1/2	2665	104 7/8	2525	99 3/8	2130	83 7/8	2060	81 1/8
45°	2460	96 7/8	2290	90 1/8	2880	113 3/8	2710	106 3/4	2245	88 3/8	2190	85

Turning clearances

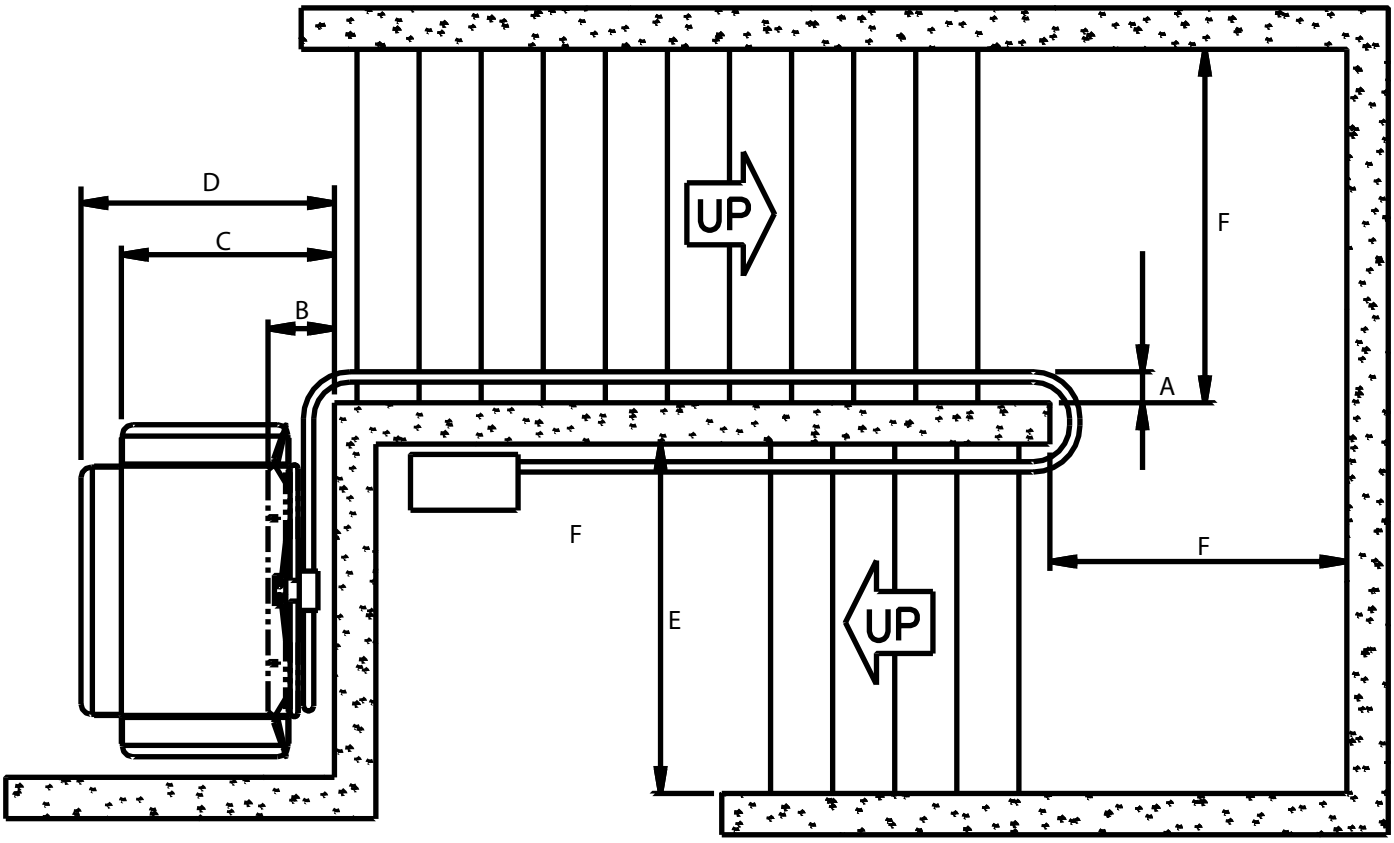

A = Wall to outside of tubes
B = Platform folded up
C = Platform folded down
D = Side load ramp
E = Straight lift application
F = Inside bend*
*Nearest obstruction (handrail or wall)

Figure 22

NOTICE

*ADA Compliant. Dimensions E and F include 20mm (3/4") running clearance and include standard ramps. Ramp extensions will increase the clearances required. For towers mounted to 2" x 6" wood boards on walls add 38mm (1 1/2") to the above tower mount dimensions. Contact your local representative or call the Design Hot Line for more information.

Dimensions	Attachment Method	Platform Sizes							
		800 x 1220 mm		800 x 1050 mm		800 x 900 mm		700 x 750 mm	
		mm	in	mm	in	mm	in	mm	in
A	Direct Mount	125	4 7/8	125	4 7/8	125	4 7/8	125	4 7/8
	Tower Mount	150	5 7/8	150	5 7/8	150	5 7/8	150	5 7/8
B	Direct Mount	320	12 5/8	320	12 5/8	320	12 5/8	330	13
	Tower Mount	345	13 5/8	345	13 5/8	345	13 5/8	355	14
C	Direct Mount	1015	40	1015	40	1015	40	900	35 3/8
	Tower Mount	1040	41	1040	41	1040	41	925	36 3/8
D	Direct Mount	1230	48 3/8	1230	48 3/8	1230	48 3/8	1115	44
	Tower Mount	1255	49 3/8	1255	49 3/8	1255	49 3/8	1140	45
E	Direct Mount	1035	40 3/4	1035	40 3/4	1035	40 3/4	920	36 1/4
	Tower Mount	1060	41 3/4	1060	41 3/4	1060	41 3/4	945	37 1/4
F	Direct Mount	1225	48 1/4	1185	46 5/8	1145	45 1/8	1025	40 3/8
	Tower Mount	1250	49 1/4	1210	47 5/8	1170	46 1/8	1050	41 3/8

Upper Landing Drive Configuration

In-Line Drive

In-line drive configuration places the drive 1200 mm (47 1/2") from the top of the stairs to allow a passenger to load and unload the platform and maneuver past the drive box.

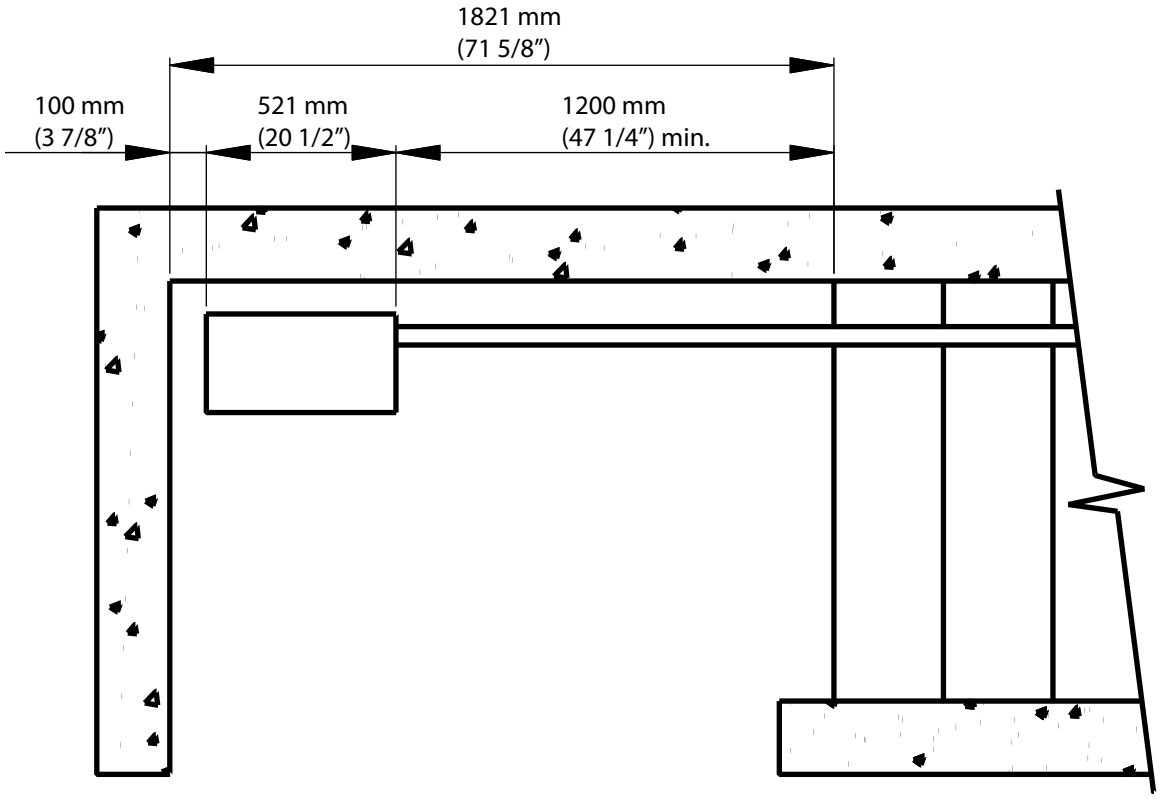

Figure 23: In-line Drive

Offset Drive

When upper landing space is limited, the drive box can be positioned closer to the stairs and the wall

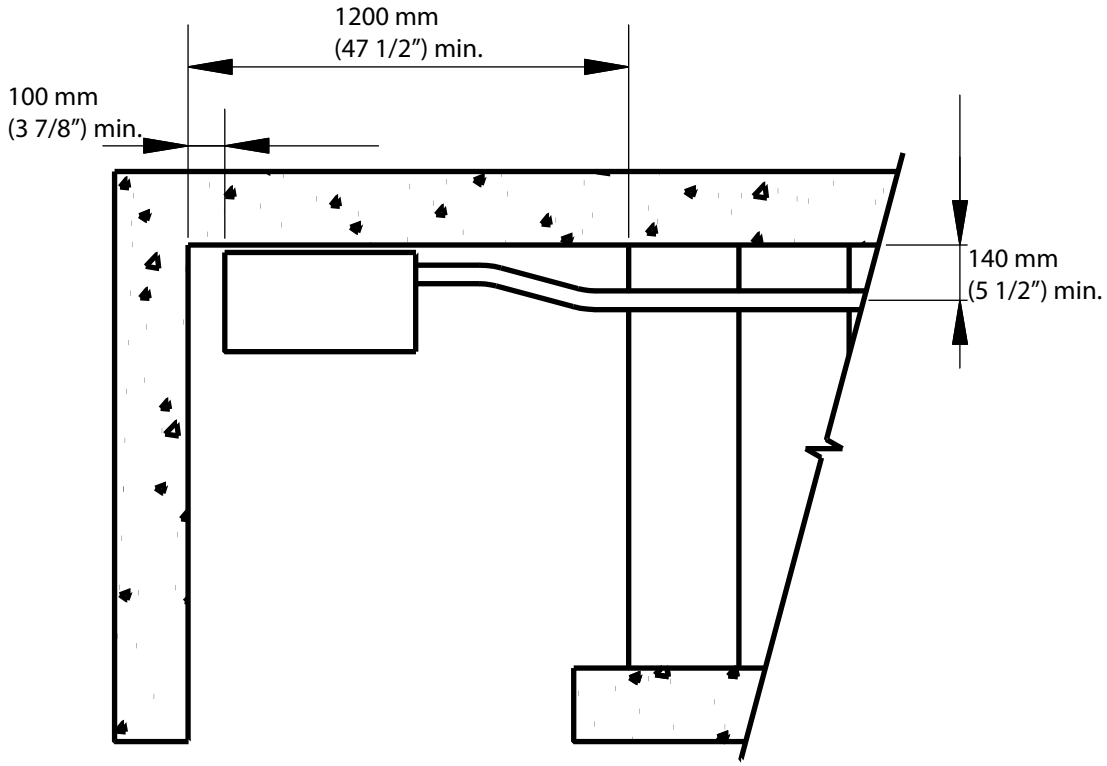

Figure 24: Offset Drive

90 and 180 Drive

The 90 and 180 configuration allows the drive box to be located away from the top of the stairs and pedestrian traffic.

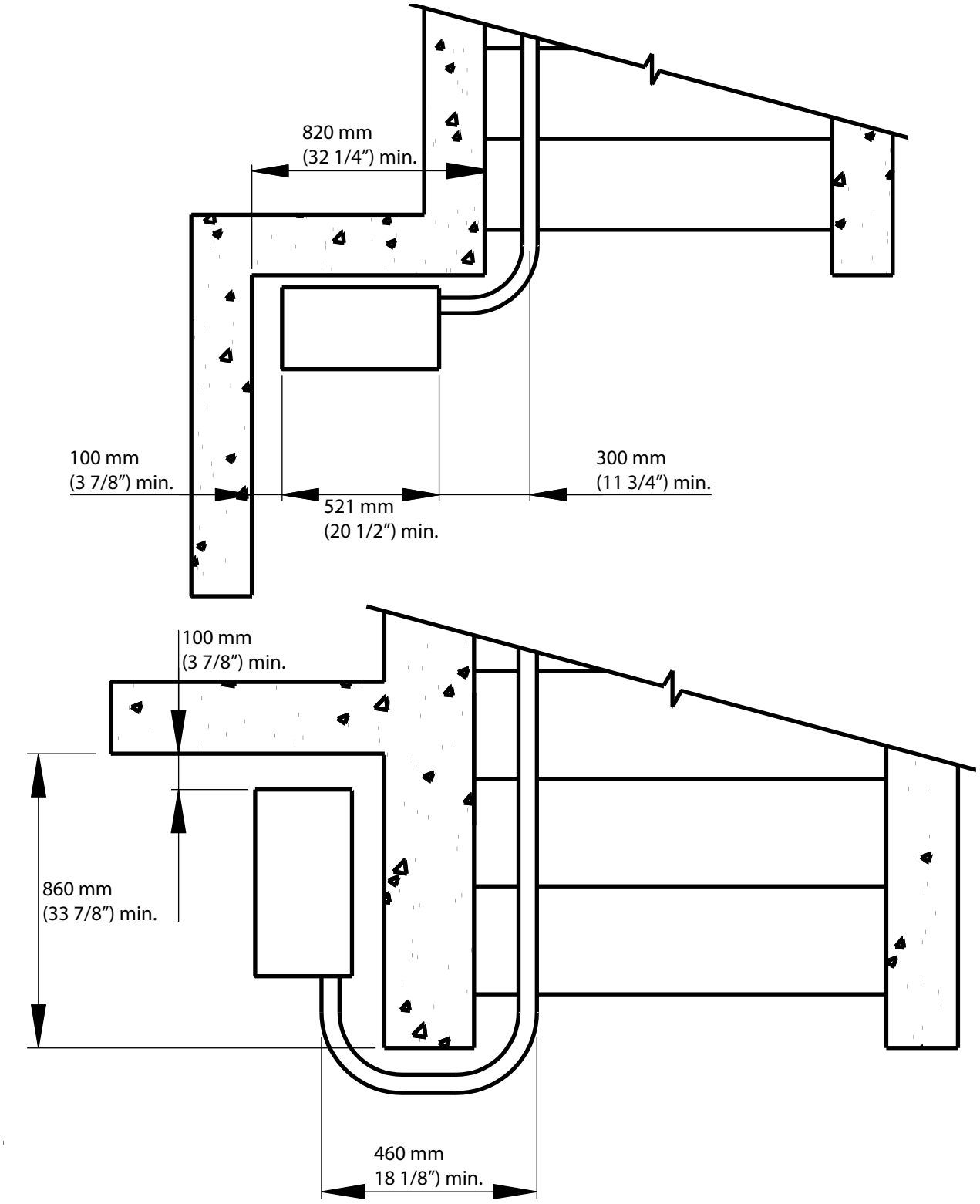

Figure 25: 90 (Top) and 180 (bottom))

NOTICE

*90 and 180 configurations require an additional 200 mm (7 7/8") if the call station is mounted on the tubes.

Drive

The compact drive is designed to utilize a minimum amount of space, in some conditions as little as 203 mm (8"). Required clearances vary with stair angle, motor orientation, as well as ramps and platform sizes. For further details on the drive system.

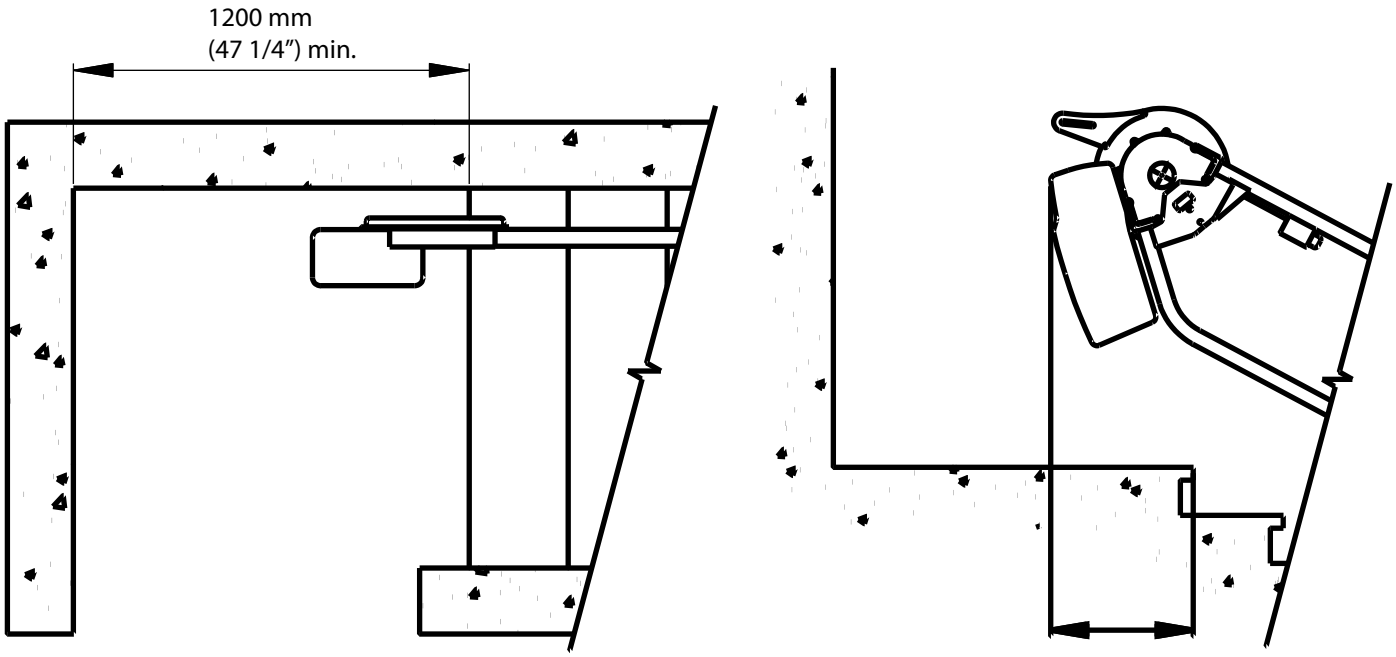

Figure 26: Compact Drive

Reverse Drive

By reversing the drive box it can be placed closer to the top stair nose, while still maintaining sufficient clearance for loading and unloading. This scenario is ideal for landings between stairs or where walls end at the top of the stairs.

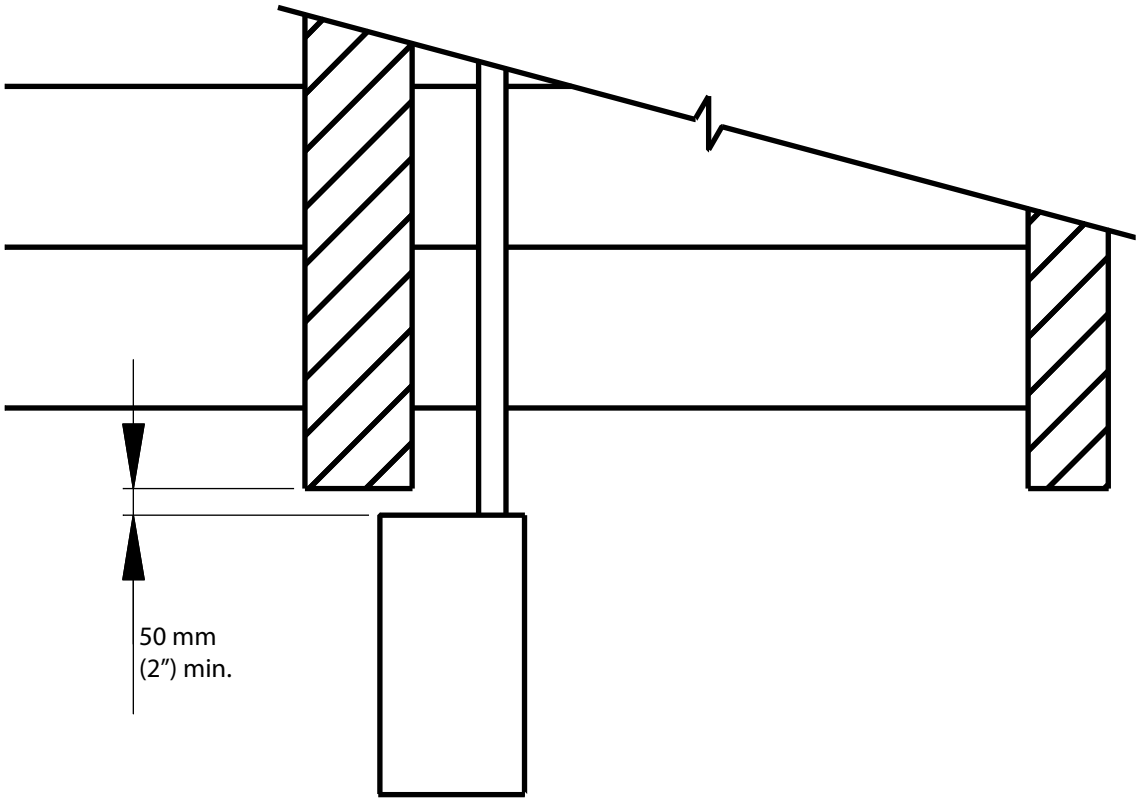

Figure 27: Reverse Drive

Alternate Drive Configurations

Drive on Treads

Designed for intermediate landings with restricted clearances due to narrow hallways, the drive box is mounted on the stair treads. This ensures maximum clearances on the landing for pedestrian traffic.

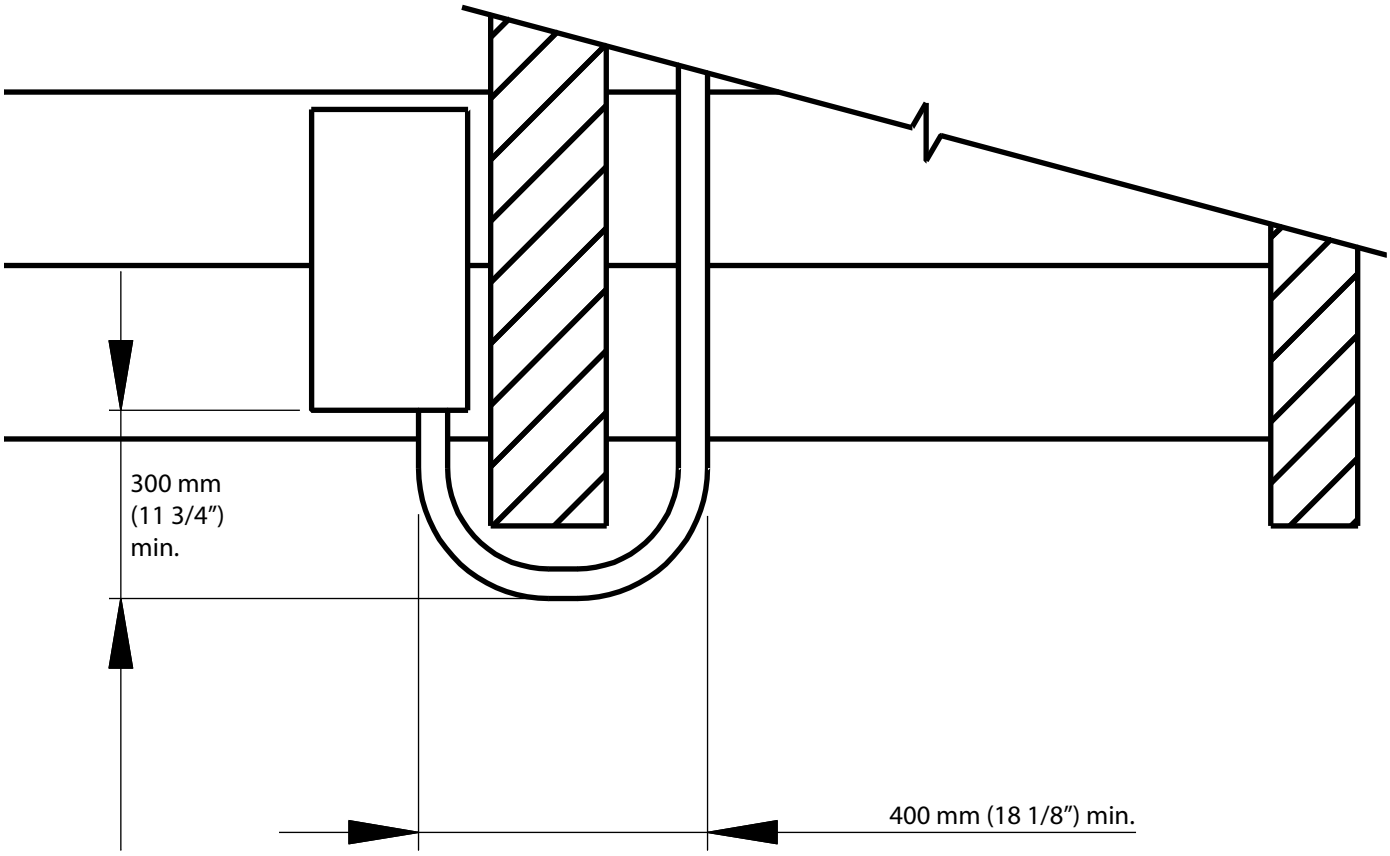

Figure 28: Drive on Tread

Drive Through Wall at 90 and 180

The tubes go through the wall, enabling the drive to be stored in a separate room instead of on the upper landing.

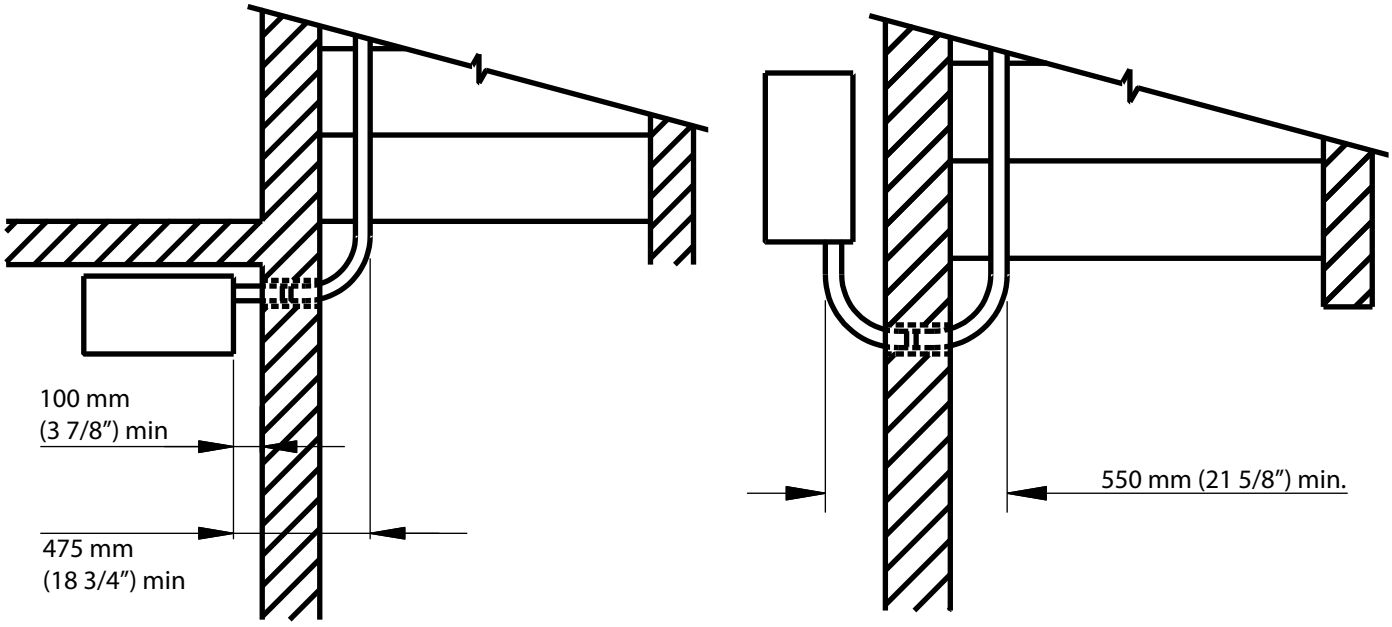

Figure 29: 90 (Left), 180 (Right)

Drive on Shelf

The drive box can be attached to a shelf that is fastened to a solid wall.

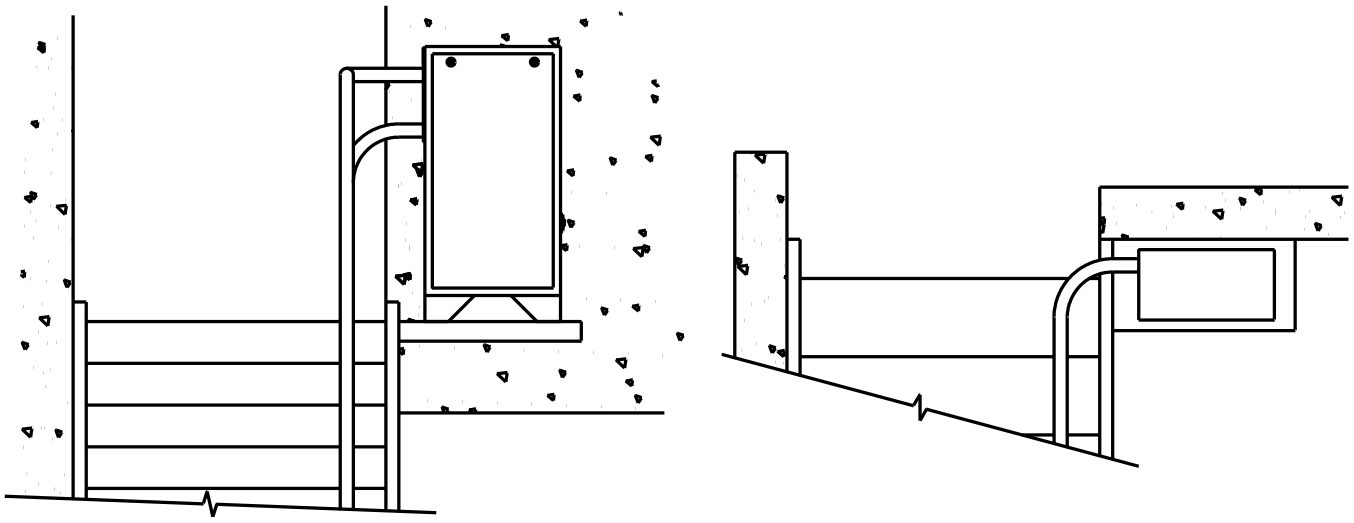

Figure 30

Standard Controller box dimensions

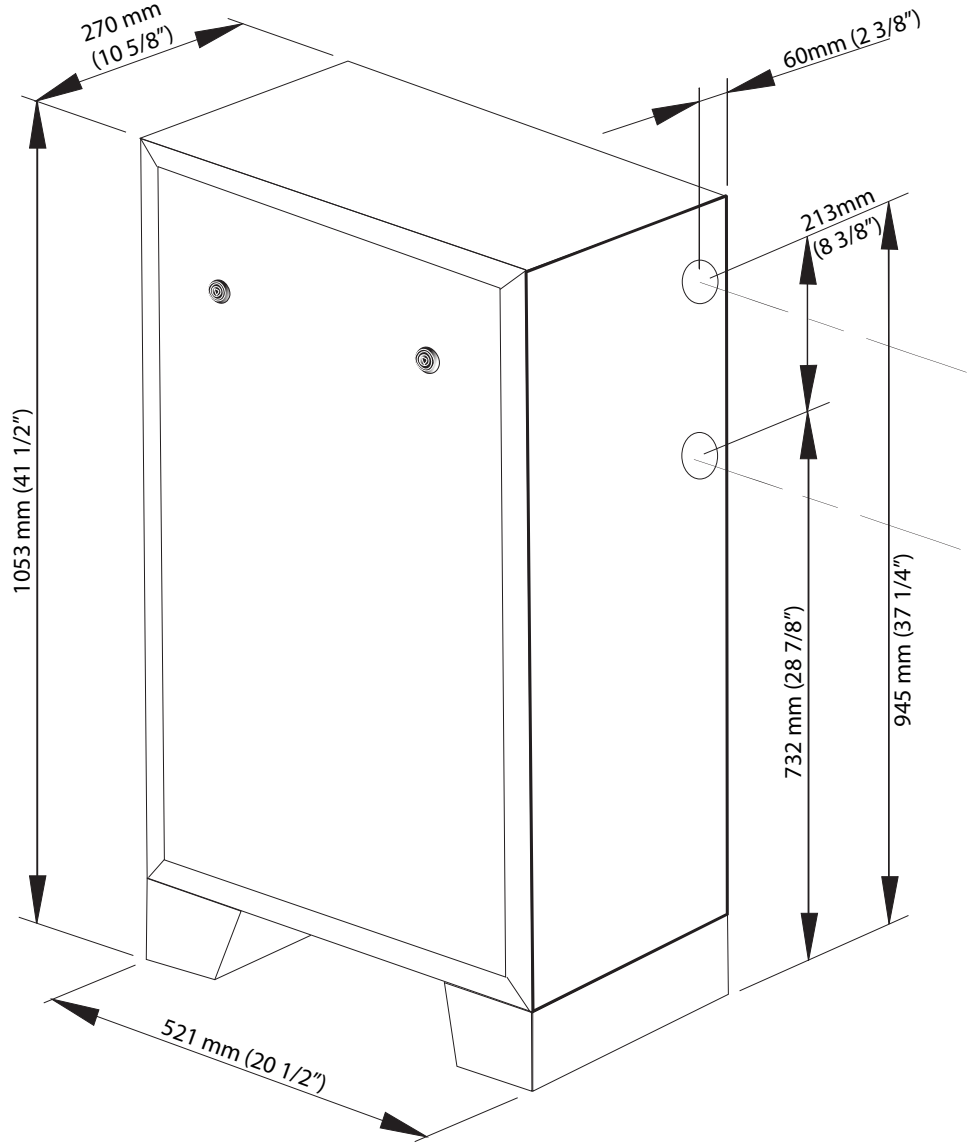

Figure 31

Controller dimensions

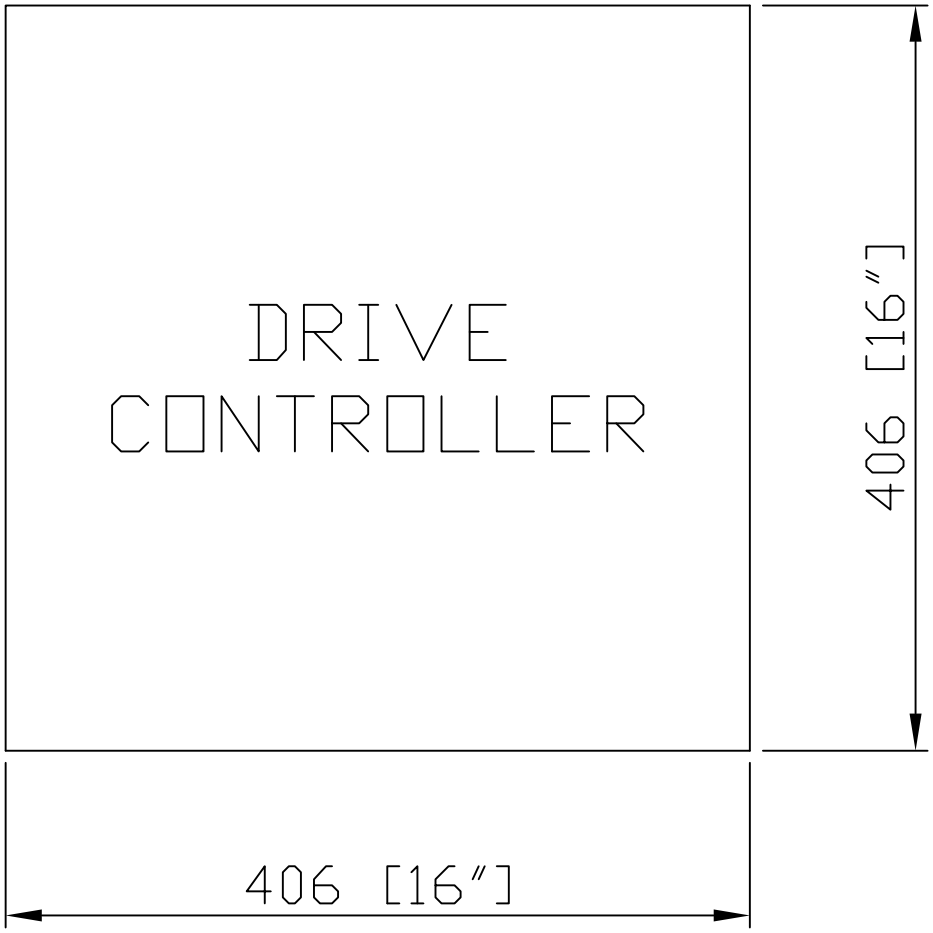

Figure 32

Sample installation wiring layout

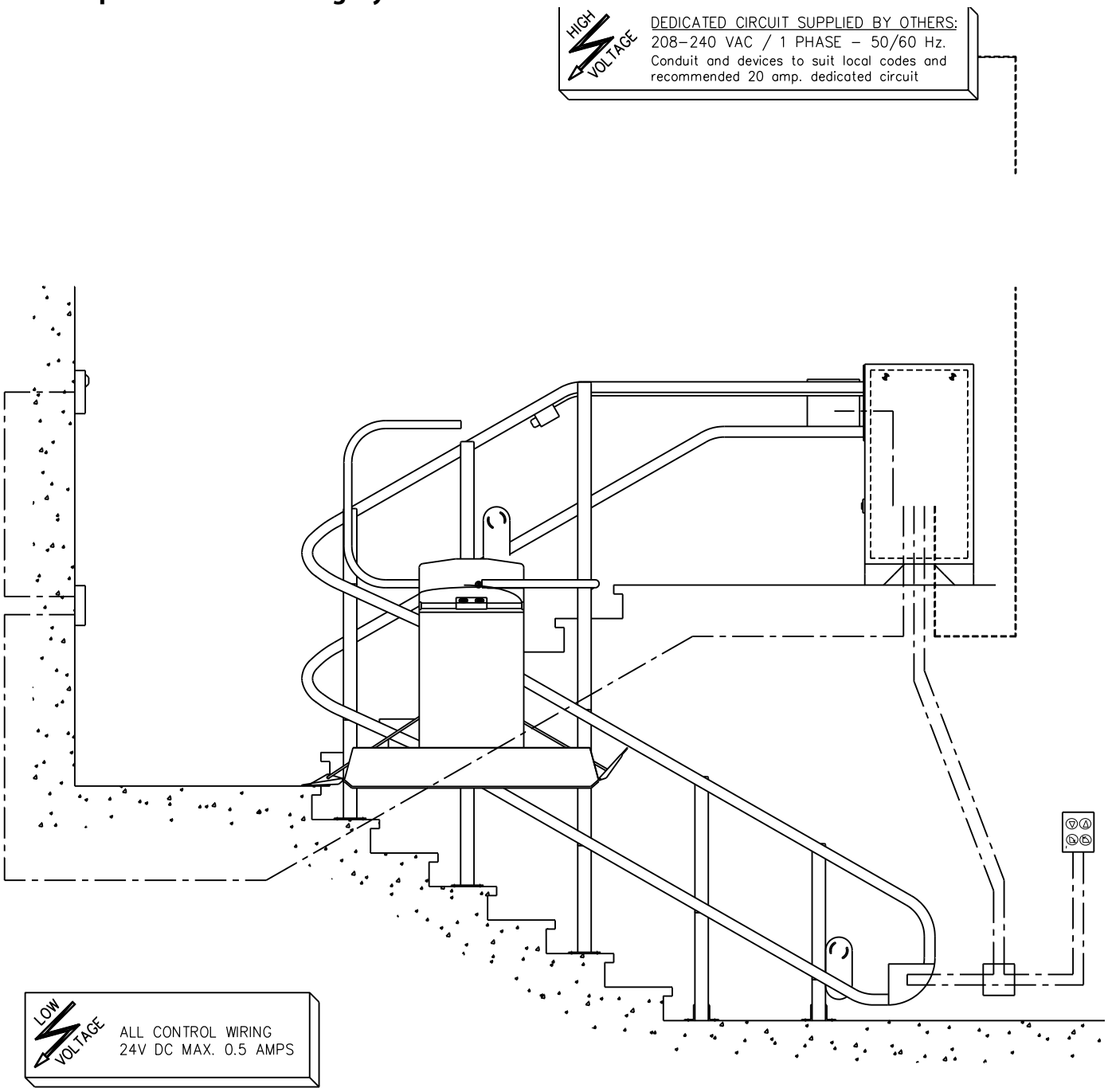

Figure 33: Bottom Floor Vertical Load Details

Savaria Pegasus

Inclined Platform Lift
Planning Guide

Part No. 001449, Rev. 002
01-m05-2026

Copyright © 2025

Savaria Concord Lifts, Inc.
www.savaria.com

Sales
2 Walker Drive
Brampton, Ontario L6T 5E1
Canada
Tel: (905) 791-5555
Fax: (905) 791-2222
Toll Free: 1-800-661-5112