

V1504

Vertical Platform Lift

Owner's Manual

savaria®

IMPORTANT – READ FIRST

Ensure that only an authorized Savaria mechanic installs and services your Lift. Under no circumstances is anyone other than a mechanic with Savaria training and authorization to install, adjust, service or modify any mechanical or electrical device on this equipment.

Failure to follow this warning can result in safety system compromises or defeat; this can result in serious injury or death. Savaria accepts no liability for property damage, warranty claims or personal injury, including death, in this circumstance.

Passenger safety is the result of countless details in the equipment design, manufacture, and installation. After installation, reliable operation and continual safe operation requires regular inspection and maintenance as outlined in this manual, or more frequently where usage, environment, or local jurisdiction requires. As the Owner, you are responsible for ensuring that regular inspections and maintenance occur in a timely manner as per the manufacturer's recommendations and maintenance schedule.

Refer to this owner's manual for unit description, setup, operating instructions, and a maintenance schedule for your Lift. Upon completion of installation, the Savaria mechanic must provide you with the information for the box below and ensure it is recorded in this owner's manual. In addition, either you or the Savaria mechanic must keep any service and/or maintenance records in the Maintenance Record section of this owner's manual.

At all times, your Lift must be maintained in compliance with the applicable standard to which it has been built and installed.

United States: A18.1–Safety Standard for Platform Lifts and Stairway Chairlift

Canada: CSA B355/613–Platform lifts and stair lifts for barrier-free access

Europe: EN-81-40Stairlifts and inclined lifting platform intended for persons with impaired mobility

Europe: 2006/42/EC–Machinery Directive

Depending on your country or region, the local authority code variant may apply. To ensure safe operation of your Lift, pay careful attention to the important notes, and follow the instructions and any additional safety regulations in this manual.

FOR OWNER'S RECORDS

Customer Name: _____

Installing Dealer: _____

Dealer's Telephone Number: _____

Date Installed: _____

Serial/Job Number: _____

CONTENTS

1. SAFETY INSTRUCTIONS 4
To Ensure Safety 4
2. PRODUCT ELEMENTS DIAGRAM 5
V-1504 Diagram 5
3. SAFETY FEATURES 6
Platform Gate 6
Safety Underpan 6
Safety Brake 7
Emergency Stop Button 7
Battery Lowering System 7
Manual Lowering System 7
Door Locks 7
4. TECHNICAL SPECIFICATIONS 8
5. USING THE DEVICE 10
Attendant Operation 10
Operating from the COP Controls 11
Operating from the Landing Station Controls 12
6. EMERGENCY OPERATION 13
Manual Lowering Procedure 13
Emergency Stop Button 14
Emergency Door Opening 14
7. TROUBLESHOOTING 16
General Troubleshooting 16
8. MAINTENANCE 17
Maintenance Schedule (General) 28
Maintenance Schedule (Adjusted) 21
Maintenance Record 23

1. SAFETY INSTRUCTIONS

To ensure safe operation of this unit, pay careful attention to the important notes below.

To Ensure Safety

- Read this manual carefully before using the equipment.
- To prevent accidents, adhere strictly to the instructions and keep clear of moving parts at all times.
- Follow instructions on all equipment labels at all times. Replace any damaged labels immediately.
- Ensure that only qualified personnel perform maintenance and service on the unit.
- When replacing parts, be sure that only genuine Savaria parts are used.

> **WARNING**
>
> At no time should people under the age of 16 use the lift while unsupervised

- Do NOT use the lift for any other purpose (such as the transport of items).
- Do NOT use the lift for firefighting purposes or for evacuation during a fire.
- Prior to operation, make sure that all areas in and around the lift are clear of any obstructions.
- Test the two-way communication every month.
- Every 6 months, trained personnel should test the emergency stop button.

2. PRODUCT ELEMENTS DIAGRAM

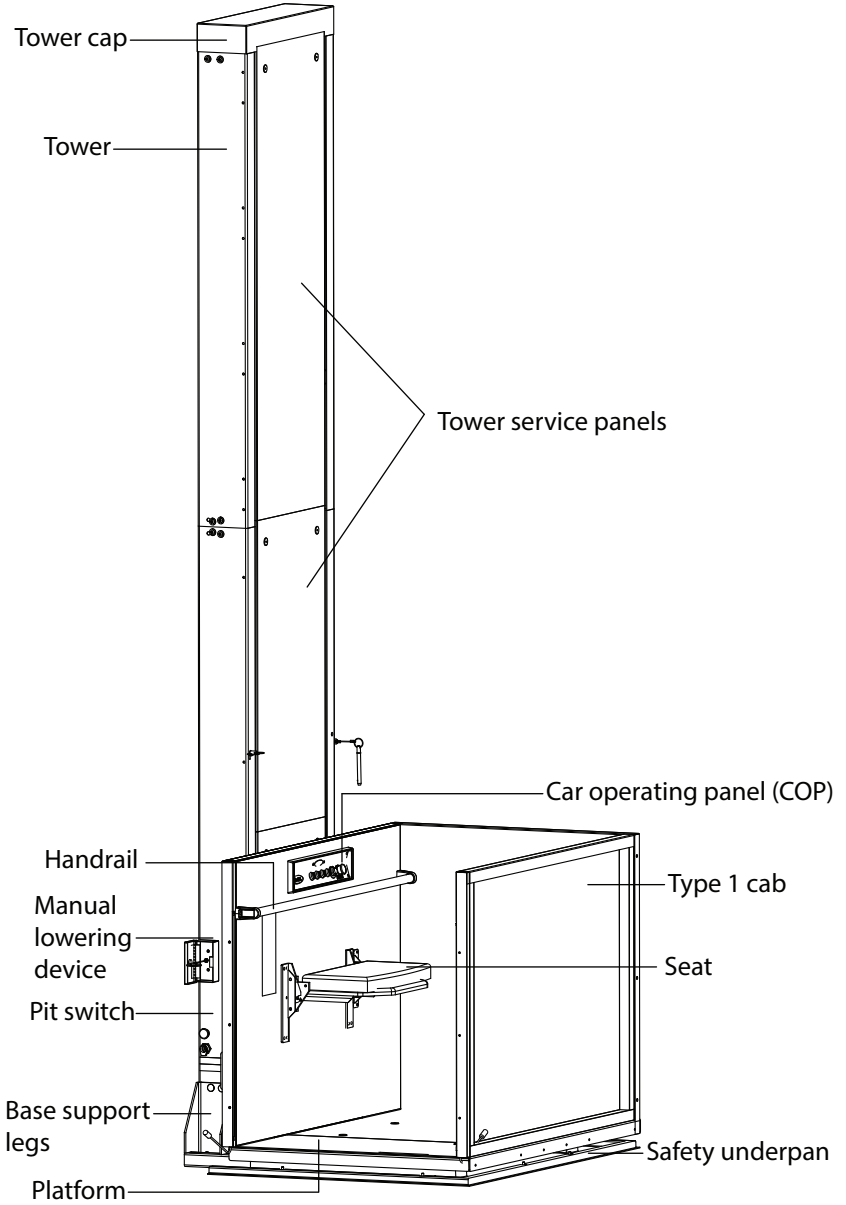

Figure 1: V-1504 Diagram

3. SAFETY FEATURES

Platform Gate

Required for public applications (optional for residential), the platform gate prevents the unit from operating if the gate is left open

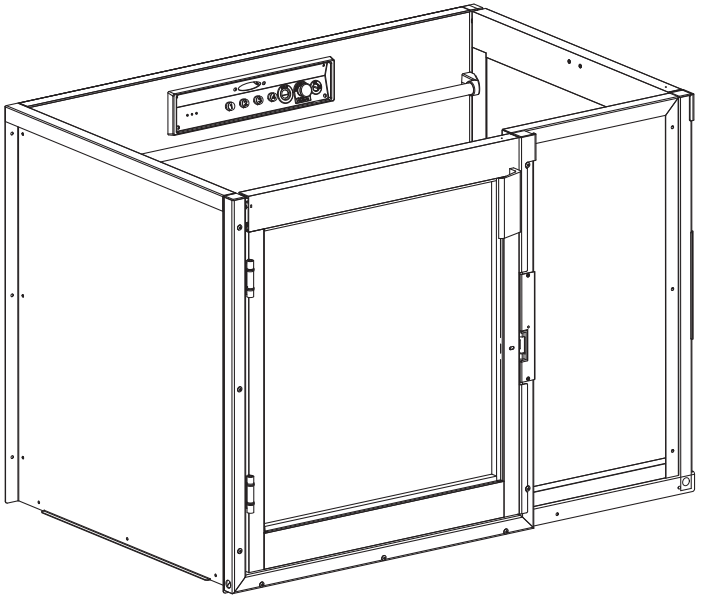

Figure 2: Platform Gate, (Type 3 Cab shown)

Safety Underpan

The safety brake stops the platform in the event of chain failure.

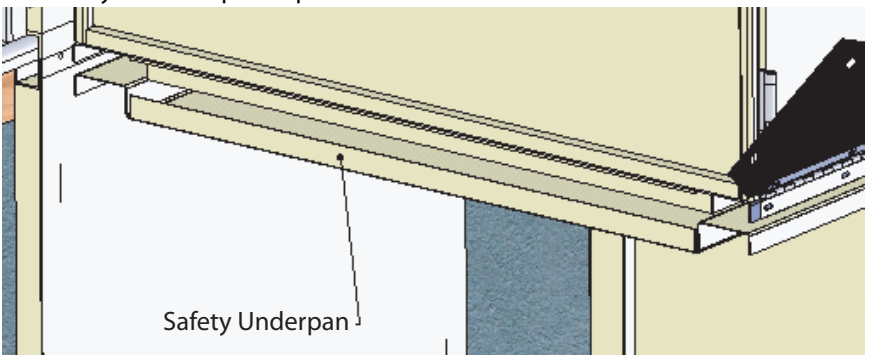

Figure 3: Safety Underpan

Safety Brake

The safety brake stops the platform in the event of chain failure.

When the platform is in operation, the chain tension keeps the brake mechanism up so that the brake's cam doesn't interfere with the tower track. If a chain failure occurs, the brake mechanism comes down (Figure 9) and the brake cam stops the platform.

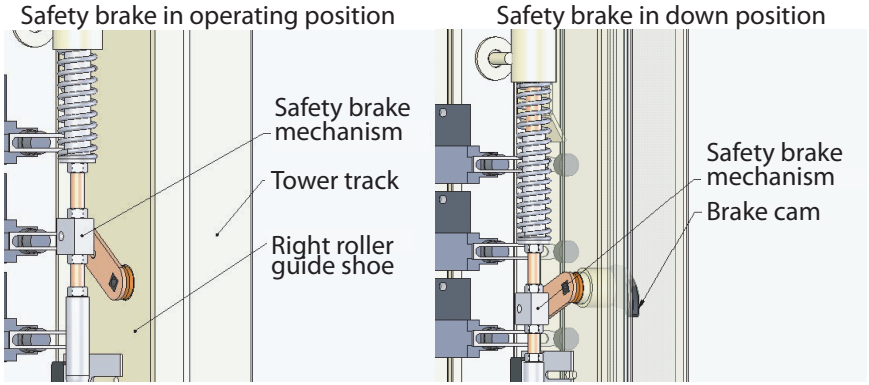

Figure 4: Safety Brake

Emergency Stop Buttons

Pressing one of the red Emergency Stop buttons during travel will stop the lift immediately and activate the alarm. The Emergency Stop overrides the landing (call/send) stations. Pull the Emergency Stop out to return the lift to normal operation.

Battery Lowering System

In the event of a power failure, thebattery lowering system will bring the lift to the bottom level

Manual Lowering System

In the event that there is a power failure and the battery lower system fails in operation, there is also a manual lowering device that will bring the lift to the lower level.

Door Locks

The door lock (**WR500, GAL lock, or Prolock)** keeps the door locked when the platform is moving and not at a landing.

4. TECHNICAL SPECIFICATIONS

Specification	Specification Data
Load capacity	750 lb (340 kg)
Maximum travel	23 ft (7 m)
Nominal speed	20 ft/min (0.1 m/s)
Levels serviced	2 (standard), 3, 4
Daily cycle	Normal: 30 Heavy: 75 Excessive: 100 Maximum starts in 1 hour on standard installation: 12
Cab sizes	36" x 48" (914 mm x 1219 mm) 36'' x 54" (914 mm x 1371 mm) 36" x 60" (914 mm x 1524 mm) 42" x 60" (1067 mm x 1524 mm)
Side guard panels	42-1/8" (1070 mm) high side guard panels on platform
Cab access	Enter/exit same side (platform Type 1L and 1R) Front/rear access (platform Type 2) 90 degree access (platform Type 3 and 4)
Power supply	120 VAC, 20 A, 60 Hz, single phase
Lighting supply (If required, circuit supplied by others)	120 VAC, 15A, 60 Hz, single phase
Motor/pump	24 VDC, 3 Hp (2.1 kW) Gear type hydraulic pump
Control system	Electronic-free relay logic controller
Drive system	2:1 chain hydraulic drive system
Tower	Modular 8 ft (2.4 m) base guide rail assembly Roller guide support
Pit depth requirement	3" (76.2 mm)
Finish	Beige electrostatic powder coat paint on all steel surfaces and vacuumed formed plastics

Specification	Specification Data
Standard features	115 VAC operation (115 VAC up direction; 24 VDC battery down direction) Call/send stations at landings Continuous-pressure type buttons Operating control buttons on platform Automatic battery recharging system (115 VAC) Remote manual lowering device Low-voltage controls Limit switches Handrail Non-skid platform surface No machine room required Emergency stop button
Options	Safety underpan Platform gate with metal insert Top landing gate Upper/lower landing door 80" (2032 mm) Fire-rated, flush-mounted landing entrances Folding seat on platform Telephone on platform Custom color Fixed access ramp Public building package Outdoor package Automatic safety ramp on platform (for outdoor model) 24V battery backup (minimum 5 trips, up and down) Savaria Link remote monitoring

5. USING THE DEVICE

IMPORTANT

Prior to operating the lift, a manual wheelchair MUST have the wheels locked and any power-operated device MUST have the power turned off. If using the provided fold-down seat, ensure that the seat belt is securely fastened

NOTICE

Position the wheelchair, scooter or walker CENTRAL on the platform.

WARNING

DO NOT drive against the fold-up ramp. For units with a fold-up ramp without a platform gate, the user MUST be seated. DO NOT use the lift while standing

Attendant Operation

- The attendant shall only operate the lift from the call station located at the lower landing if the lift is unenclosed.
- The attendant shall have full view of the floor area under the lift and of the rider at all times.
- If the lift is enclosed, the lift can be operated from the upper landing provided the operator has view of the rider at all times.
- During attendant operation, the car directional controls must not be operational.

Operating from the COP Controls

To operate the V1504 from the COP controls:

1. Insert the key into the switch (if equipped) and turn it to the ON position to activate the operating buttons.
2. Press the appropriate landing button to move the lift to the destination. Note that the V1504 will not move if one of the doors is open.
3. When the lift reaches the landing, the door will unlock automatically (for units with mechanical GAL locks). For units with an interlock (WR500 or Prolock), the door will unlock automatically for a few seconds when the lift reaches the landing. If you need to re-open the door after the delay, turn the key to the ON position and press the call button again to unlock the door.
4. To prevent unauthorized use of the lift, take the key out when the unit is not in operation.
5. Pressing the Emergency Stop button during travel will stop the lift immediately and activate the alarm. The Emergency Stop overrides the landing station controls. Pull the Emergency Stop out to return the lift to normal operation.
6. Pressing the Alarm button during travel will activate the alarm. **If the door is locked at a landing, you can press the Alarm button to unlock the current landing door.**

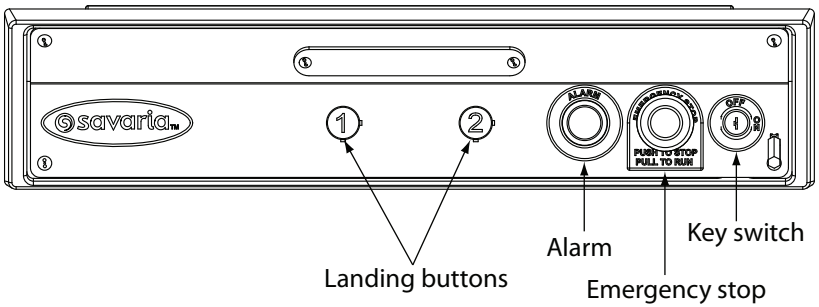

Figure 5:Sample COP

Operating from the Landing Station Controls

To operate the V1504 from the landing (call/send) station controls:

1 Insert the key into the key switch (if equipped) and turn it to the ON position to activate the operating buttons.

2 Press the appropriate button to move the lift in the required direction. Note that the V1504 will not move if one of the doors is open.

3 When the lift reaches the landing, the door will unlock automatically (for units with mechanical GAL locks). For units with an interlock (WR500 or Prolock), the door will unlock automatically for a few seconds when the lift reaches the landing. If you need to re-open the door after the delay, turn the key to the ON position and press the call button again to unlock the door.

4 To prevent unauthorized use of the lift, take the key out when the unit is not in operation.

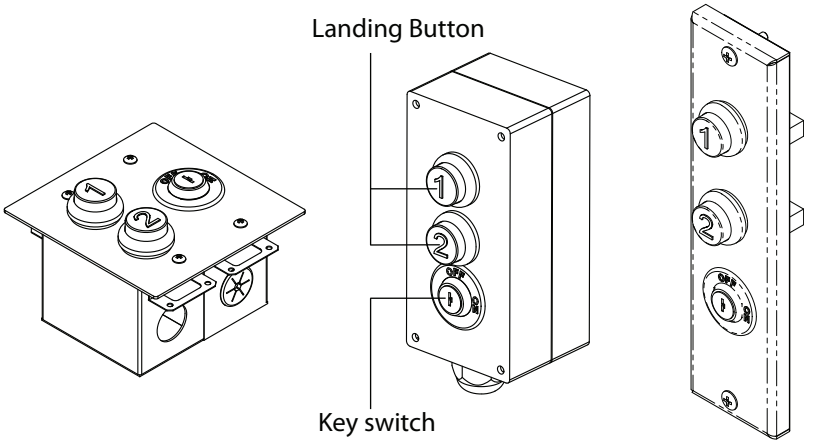

Figure 6: COP

6. EMERGENCY OPERATION

DANGER

The following procedure arefor emergency use only, by trained personnel. DO NOT leave the area unattended. After use of any emergency function (access key or manual lowering device), ensure that all doors/gates are secure and locked.

Manual Lowering Procedure

In the event of a power failure occurs, where the battery fails while operating, there is also a manual lowering device that will bring the lift to the lower level.

The manual lowering box (Figure 10) is located on the side of the V1504. When you pull on the steel cable located inside the manual lowering box, the platform descends to ground level.

DO NOT have any hoistway door open and always warn the passenger that the platform will be lowered manually

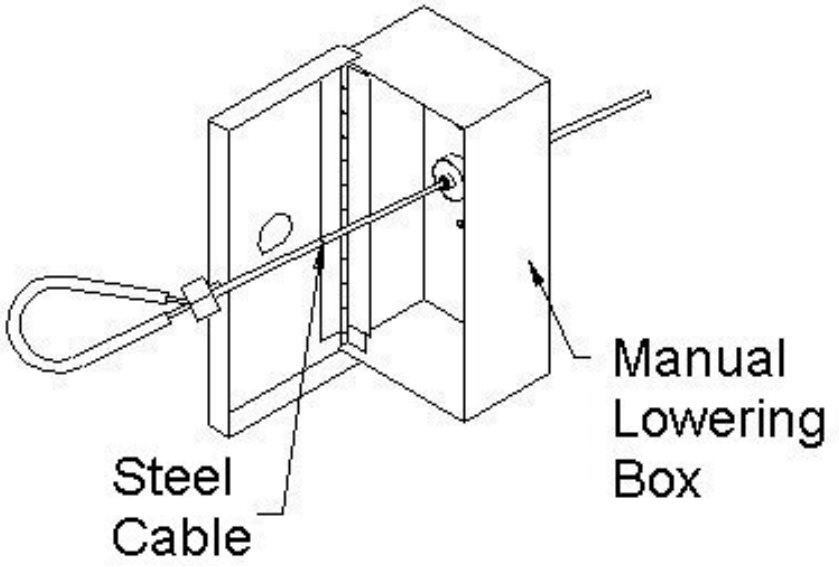

Figure 7: Manual Lowering Box

Emergency Stop Button

Pressing the red Emergency Stop button during travel will stop the lift immediately and activate the alarm. The Emergency Stop overrides the landing stations (hall calls/remotes). Twist the Emergency Stop out to return the lift to normal operation.

Emergency Door Opening

> **NOTICE**
> Keys are for emergency use only and should always be kept in a safe place for use by trained personnel only

For units with a **WR-500 lock**, the door can be opened manually using the emergency key provided (Figure 8).

Insert the key into the lock and turn it a half turn clockwise to unlock the door. Pull the door open and then turn the key a half turn counter-clockwise to remove it from the lock. DO NOT open the door if there is any chance of falling into the hoistway or from the platform.

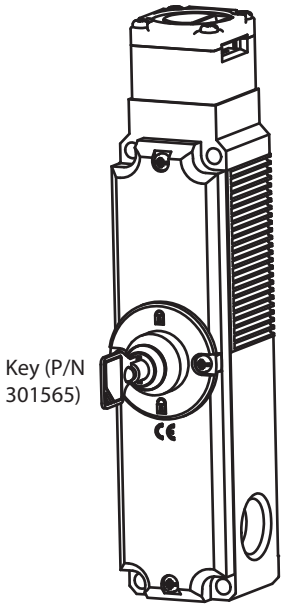

Figure 8: WR500 Lock with Key (301565)

For units with a **GAL lock** or **Prolock**, the door can be opened manually using a special key inserted into the round pin on the front of the lock (Figure 9).

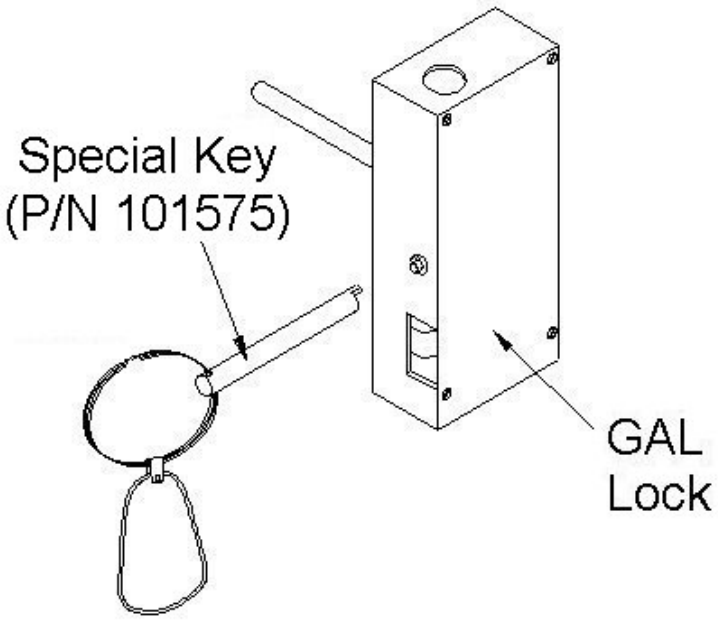

Figure 9: Gal Lock Shown with key (101575)

7. TROUBLESHOOTING

IMPORTANT

Only trained technicians are authorized to perform repairs and maintenance. DO NOT manipulate, modify or remove any safety feature of the lift. If any issues persist, please contact your authorized Savaria Dealer.

General Troubleshooting

Problem	Action
Platform goes up but does not come down	Check the underpan sensor. Pull down on the underpan to ensure the pan is not stuck in the activated position.
Platform comes down but does not go up	Check the power supply (breaker, cord, battery, etc.).
Platform does not move	Check that the key is ON (if applicable). Check that the doors are closed. Check to see if the Emergency Stop is pushed in; it should be pulled out for normal operation. If the platform is at the top landing, check the underpan sensor as described above.

8. MAINTENANCE

V-1504 is subject to wear and tear from use. You must perform the checks and actions in the following tables **at minimum, once a year**, to ensure safety and proper operation.

IMPORTANT

Savaria products are only to be installed, adjusted, serviced, or maintained by authorized Savaria dealers. Your Savaria product warranty will become void if serviced by an unauthorized Savaria dealer.

IMPORTANT

Please test the phone in your elevator during every maintenance. If the phone is inactive, please shut down the elevator until the phone line is active. This applies to all lifts in a hoistway or enclosure models.

DANGER

Under no circumstances should you ever attempt to remove panels for cleaning!

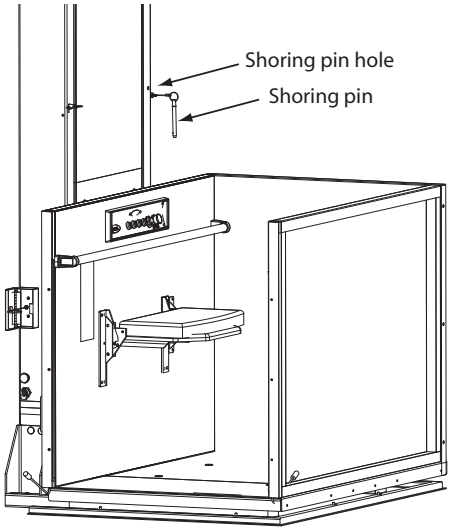

Figure 10: Shoring Pin location

Maintenance Schedule (General)

Verification	Frequency Commercial /Exterior	Frequency (Residential)
For units with an interlock, the lift should not move if any door is not closed and locked. For units with a GAL lock, the lift should not move if any door is not closed.The lift should not move beyond the door zone (usually less than four inches away from the landing in either direction) if the door is not locked.	Every 6 months	**Normal**: Every Year **Heavy**: Every Year **Excessive**: Every 6 months
Verify the underpan is working. Be sure to insert the shoring pins.	Every 6 months	**Normal**: Every Year **Heavy**: Every Year **Excessive**: Every 6 months
Verify correct operation of the phone (where applicable).	Every 6 months	**Normal**: Every Year **Heavy**: Every Year **Excessive**: Every 6 months
Confirm doors or gates are all self-closing.	Every 6 months	**Normal**: Every Year **Heavy**: Every Year **Excessive**: Every 6 months
Check that the Stop button works correctly	Every 6 months	**Normal**: Every Year **Heavy**: Every Year **Excessive**: Every 6 months

Verification	Frequency Commercial /Exterior	Frequency (Residential)
Verify the door lock operation: • The lift is operational when the door is locked • The lift is NOT operational when the door is open at a landing • Insert the lock key to manually unlock the door and ensure the following: • The lift is NOT operational when the door is manually unlocked with the key • The key cannot be removed from the lock when the door is manually unlocked	Every 6 months	**Normal**: Every Year **Heavy**: Every Year **Excessive**: Every 6 months
Check the suspension system: • Chains • Connecting links • Chain pulleys and shafts • Parts holding the chains on the roller supports • Chain tensioners on the rail (they should be tight)	Every 6 months	**Normal**: Every Year **Heavy**: Every Year **Excessive**: Every 6 months
• Cylinder head (cotter pins, cracks, welds) • Up relays - if you have two up relays (solenoids or contactors), make sure one of them is not stuck in the activated position. Use a multimeter to verify that every N.O. contact is open when the relays are not being activated.	Every 6 months	**Normal**: Every Year **Heavy**: Every Year **Excessive**: Every 6 months
Check the safety brake.	Every 6 months	**Normal**: Every Year **Heavy**: Every Year **Excessive**: Every 6 months
Check for oil leaks.	Every 6 months	**Normal**: Every Year **Heavy**: Every Year **Excessive**: Every 6 months

Verification	Frequency Commercial /Exterior	Frequency (Residential)
Check the rollers.	Every 6 months	**Normal**: Every Year **Heavy**: Every Year **Excessive**: Every 6 months
Ensure that all filler panels (aluminum, Plexiglas or glass) are securely fastened in the enclosure, doors and gates.	Every 6 months	**Normal**: Every Year **Heavy**: Every Year **Excessive**: Every 6 months

Maintenance Schedule (Adjusted)

Some Jurisdictions have their own state, county or local code that deviate from national code. Please fill out the below information with the requirements of your region:

Savaria Job Number: _____

Installation Address: _____

Verification	
For units with an interlock, the lift should not move if any door is not closed and locked. For units with a GAL lock, the lift should not move if any door is not closed.The lift should not move beyond the door zone (usually less than four inches away from the landing in either direction) if the door is not locked.	
Verify the underpan is working. Be sure to insert the shoring pins.	
Verify correct operation of the phone (where applicable).	
Confirm doors or gates are all self-closing.	
Check that the Stop button works correctly	
Verify the door lock operation: • The lift is operational when the door is locked • The lift is NOT operational when the door is open at a landing • Insert the lock key to manually unlock the door and ensure the following: • The lift is NOT operational when the door is manually unlocked with the key • The key cannot be removed from the lock when the door is manually unlocked	
Check the suspension system: • Chains • Connecting links • Chain pulleys and shafts • Parts holding the chains on the roller supports • Chain tensioners on the rail (they should be tight)	

Verification	
• Cylinder head (cotter pins, cracks, welds) • Up relays - if you have two up relays (solenoids or contactors), make sure one of them is not stuck in the activated position. Use a multimeter to verify that every N.O. contact is open when the relays are not being activated.	
Check the safety brake.	
Check for oil leaks.	
Check the rollers.	
Ensure that all filler panels (aluminum, Plexiglas or glass) are securely fastened in the enclosure, doors and gates.	

Maintenance Record

Date	Time	Reason for call	Comments	Dealer

V1504
Vertical Platform Lift
Owner's Manual

For service or questions about this product,
please contact your installing dealer.

Dealer Name: _____

Dealer Phone: _____

Authorized Savaria Dealer

Savaria Concord Lifts, Inc.
2 Walker Drive Brampton ON L6T 5E1 Canada

savaria

savaria.com

Part No. 000692, Rev. 031

©2025 Savaria Corporation