

V1504
Vertical Platform Lift

Planning Guide

savaria

Applicable Codes:

ASME A17.1
CAN/CSA B355
ASME A18.1
CAN/CSA B613

Revision History of This Guide

April 6, 2010 - Initial release
May 16, 2011 - Updated "Travel speed" in Specifications table to 20 ft/min (0.1 m/s)
June 17, 2011 - Added 24V battery backup to Options to Specifications table on page 5
July 8, 2013 - Added Noise Level to Specifications table on page 4
July 29, 2013 - Added optional 80" cab wall height to Specifications table on page 4
October 7, 2013 - Added seat capacity to Specifications table on page 4
November 12, 2013 - Revised drawings on pages 12 through 26 to include 42"-wide platforms
December 5, 2013 - Revised enclosure drawings on pages 20 through 24
February 12, 2014 - Added seat dimensions on page 27
March 18, 2014 - Revised motor/drive information in Specifications table on page 5
April 7, 2014 - Revised drawings on pages 20-24
April 29, 2014
May 29, 2014 - Added NOTE to page 27 specifying max seat capacity; Changed motor/drive specification on page 4 from 1 HP to 3 HP
June 9, 2014 - Added Remote Controller/Pump Box dimensions on page 28
June 25, 2014 - Added door and gate drawings - pages 25 to 36
July 28, 2014 - Added DuraSwing operator drawings - pages 37 to 40
September 11, 2014 - Removed section "Additional Branch Circuit" from page 43
November 5, 2014 - Revised Applicable Codes on page 3
January 20, 2015 - Added new 2014 code in section above
February 17, 2015 - Revised drawings on pages 13 to 19
September 24, 2015 - Added Daily Cycle to specifications table on page 4
March 1, 2016 - Revised Motor/drive specification in table on page 4
June 3, 2016 - Added spec for Additional Branch Circuit on page 43
July 14, 2016 - Added new Prodoor drawing on page 33
August 8, 2016 - Revised voltage in Standard Features on Specifications table on page 4
February 9, 2017 - Added spec for distance between landings to specs table on page 4
February 16, 2017 - Added spec for temperature to specs table on page 4
April 4, 2017 - Added information for Branch Circuit for Hoistway Pit Lighting and Receptacles to Provisions By Other, Electrical Requirements on page 44
May 29, 2017 - Added NOTE re: centerline to Figure 15 on page 17 and Figure 17 on page 19
August 22, 2017 - Added note re: bracket screws to Site Construction Details on page 6
March 27, 2018 - Revised speed spec on page 4 to say Nominal Speed
September 27, 2018 - Added ASME 18.1-2017 to code list on page 3
February 19, 2019 - Revised Site Construction Details and added a NOTE on page 7
February 28, 2020 - Revised 24V battery backup spec on page 6
February 29, 2020 - Added Savaria Link option to specs table on page 6 and provisions by others on page 46
May 6, 2020 - Added Load Calculations on pages 12 and 13
September 1, 2020 - Revised options in specs table on page 6
October 7, 2021 - Revised pages 12 and 13
June 8, 2022 - Updated measurements for remote controller on page 46
August 2 2022 - Updated cover
October 18 2022 - Updated load calculations on page 12
April 07, 2025 - Updated code standards
September 12, 2025 - revised information on page 5, revised format
July 10, 2026 - Revised note on page 17

Copyright © 2025
Savaria Concord Lifts, Inc.
All rights reserved.

Purpose of This Guide

This guide assists architects, contractors, and lift professionals to incorporate the V1504 Vertical Platform Lift into a residential or public building design. The design and manufacture of the V1504 Vertical Platform Lift meets the requirements of the following codes and standards:

- ASME A18.1-2003 Section 2 (Public)
- ASME A18.1-2005 Section 2 (Public)
- ASME A18.1-2008 Section 2 (Public)
- ASME A18.1-2011 Section 2 (Public)
- ASME A18.1-2014 Section 2 (Public)
- ASME A18.1-2017 Section 2 (Public)
- ASME A18.1-2020 Section 2 (Public)
- ASME A18.1-2023 Section 2 (Public)
- ASME A18.1-2003 Section 5 (Private)
- ASME A18.1-2005 Section 5 (Private)
- ASME A18.1-2008 Section 5 (Private)
- ASME A18.1-2011 Section 5 (Private)
- ASME A18.1-2014 Section 5 (Private)
- ASME A18.1-2017 Section 5 (Private)
- ASME A18.1-2020 Section 5 (Private)
- ASME A18.1-2023 Section 5 (Private)
- ASME A17.1-1996 Section 20 (Public)
- ASME A17.1-1996 Section 21 (Private)
- CAN/CSA B355 S1-02 (Public)
- CAN/CSA-B355-09 (Public)
- CAN/CSA B613-2000 (Private)

We recommend that you contact your local authority having jurisdiction to ensure that you adhere to all local rules and regulations pertaining to vertical platform lifts.

IMPORTANT

This Planning Guide provides nominal dimensions and specifications useful for the initial planning of a vertical platform lift project. Dimensions and specifications are subject to change without notice due to continually evolving code and product applications.

Before beginning actual construction, please consult Savaria or the authorized Savaria dealer in your area to ensure you receive your site-specific installation drawings with the dimensions and specifications for your project.

Visit our website for the most recent V1504 drawings and dimensions.

How to Use This Guide

1. Determine your client's intended use of the lift.
2. Determine the local code requirements.
3. Determine the site installation parameters.
4. Determine the cab type and hoistway size requirements.
5. Plan for electrical requirements

Table of Contents

Technical Specification 5
Provisions By Others 7
General Requirements 7
Structural Requirements 7
Electrical Requirements 7
Entrance Requirements 8
Load Calculations 14
Drawings 19

Technical Specifications

Specification	Specification Data
Load capacity	750 lb (340 kg)
Seat capacity	330 lb (150 kg)
Maximum travel	23 ft (7 m)
Nominal speed	20 ft/min (0.1 m/s)
Temperature	Indoor: +5 °F to +122 °F (-15 °C to +50 °C) Outdoor: -20 °F to +122 °F (-29 °C to +50 °C)
Noise level (for typical installation)	72.9 dBA (up direction); 50.0 dBA (down direction) Measured at a height of 1m, distance of 1m, in front of the motor with all panels on
Daily cycle	Normal: 30 Heavy: 75 Excessive: 100 Maximum starts in 1 hour on standard installation: 12 NOTE: Please consult your Sales Representative if there a chance you may exceed these amounts.
Levels serviced	2 (standard), 3, 4
Cab sizes	36" x 48" (914 mm x 1219 mm) 36" x 54" (914 mm x 1371 mm) 36" x 60" (914 mm x 1524 mm) 42" x 48" (1067 mm x 1219 mm) 42" x 54" (1067 mm x 1371 mm) 42" x 60" (1067 mm x 1524 mm)
Cab walls (height)	Standard 42-1/8" (1070 mm) Optional 80” (2031 mm)
Cab access	Enter/exit same side (platform Type 1L and 1R) Front/rear access (platform Type 2) 90 degree access (platform Type 3 and 4)
Power supply	120 VAC, 20 A, 60 Hz, single phase
Lighting supply (If required, circuit supplied by others)	120 VAC, 15A, 60 Hz, single phase
Motor/drive	2:1 chain hydraulic, 3 Hp, gear-type motor (24 VDC)
Control system	Electronic-free relay logic controller
Distance between 2 landings	7" (178 mm) minimum
Tower	Modular 8 ft (2.4 m) base guide rail assembly Roller guide support
Pit depth requirement	3" (76.2 mm)
Finish	Beige electrostatic powder coat paint on all steel surfaces and vacuumed formed plastics

Specification	Specification Data
Safety features	Platform gate Safety underpan Door locks Safety brake Emergency stop buttons Manual lowering and battery lowering system
Options	Platform gate with metal insert and electric strike Top landing gate Upper/lower landing door 80" (2032 mm) Fire-rated, flush-mounted landing entrances Folding seat on platform Telephone on platform Custom color Fixed access ramp Public building package Outdoor package Automatic safety ramp on platform (for outdoor model) 24V battery backup (minimum 5 trips, up and down) Remote controller/pump box Savaria Link remote monitoring Wooden door Doors or gate with glass or acrylic inserts

PROVISIONS BY OTHERS

GENERAL REQUIREMENTS

Hoistway

The hoistway must be designed and built in accordance with the "safety standard for platform lifts and stairway chairlifts" or the "safety code for elevators and escalators" and all state and local codes.

Plumb Runway

Due to close running clearances, the owner/agent must ensure that the hoistway and the pit (where provided) are level, plumb and square and are in accordance with the dimensions on the installation drawings.

Minimum Overhead Clearance

The owner/agent must ensure the minimum overhead clearance is in compliance with codes.

Construction Site

The owner/agent is required to provide all masonry, carpentry and drywall work as required and shall patch and make good (including finish painting) all areas where walls/floors may need to be cut, drilled or altered in any way to permit the proper installation of the lift.

Dimensions

The contractor/customer is required to verify all dimensions and report any discrepancies to our office immediately.

STRUCTURAL REQUIREMENTS

Floor/Support Wall Loads

The structural engineer is to ensure that the building and shaft will safely support all loads imposed by the lift equipment. Refer to the installation drawings for the loads imposed by the equipment.

Mast to be Securely Fastened

Where required, the mast must be securely fastened to the structural support wall. Refer to the installation drawings for the loads imposed by the equipment.

Where Doors are Required

Suitable lintels must be provided by the owner/agent. Door frames are not designed to support overhead wall loads.

ELECTRICAL REQUIREMENTS

General

Electrical equipment and wiring must comply with Section 38 of CSA C22.1 (Canada) or Section 620 of NEC ANSI NFPA 70 (USA).

Power Supply

A 120 VAC, 20A, 60 Hz, single-phase circuit through a fused disconnect with an auxiliary contact on the main power supply is required.

Lighting

Lighting of 100 lux minimum is required at platforms and landings. Lighting with a switch and electrical GFCI outlet is required in the hoistway pit.

Additional Branch Circuit

Branch circuit with disconnect for door operators, if equipped (120VAC, 15A, 60HZ, 1PH). Branch circuit with disconnect for ventilation system, if equipped (120VAC, 15A, 60HZ, 1PH).

Branch Circuit for Hoistway Pit Lighting and Receptacles (Canada Only)

- A separate branch circuit shall supply the hoistway pit lighting and receptacles.
- Required lighting shall not be connected to the load side terminals of a ground fault circuit interrupter receptacle(s).
- A lighting switch shall be provided and shall be located so as to be readily accessible from the pit access door.
- At least one 125V, single-phase, duplex receptacle connected to a 15A branch circuit shall be provided in the hoistway pit.

ENTRANCE REQUIREMENTS

Upper Landing Gates

Where required, smooth solid barriers are to be supplied and installed on both sides of the entrance at the upper level and must be a minimum of 42'' (1067 mm) high. The entrance assembly must be in place prior to this provision.

Fascia Panel Below Upper Level Entrance

Where required, fascia panel must be fastened to a solid wall and be perpendicular to the floor and walls. Hoistway fascia is not self-supporting for long, continuous runs void of entrances. Adequate support for the fascia must be provided.

Entrance Assemblies

Entrance assemblies must be adjusted to align with the platform and interlock equipment. Others must allow an adequate opening.

Return Walls

Return walls at the entrances must be built-in by others after the entrance assemblies are in place. The entrance assembly must be securely fastened to the walls by the contractor.

SAVARIA LINK OPTION

•If you have the Savaria Link Ethernet remote monitoring option, ensure that you have an Ethernet connection with Internet capability in the vicinity of the unit's controller.
•If you have the Savaria Link Wireless remote monitoring option, ensure that you have a wireless signal with Internet capability in the vicinity of the unit's controller.

Construction Site Details

The V1504 needs a wall that supports a minimum of 472 lb (2100 N) of pull out force at each bolt of the bracket (two bolts per bracket). Note that the brackets come with the proper hardware to secure them in place (1/2" x 3" lag screws for wood/drywall or 1/2" x 4-1/4" anchor wedge screws for concrete walls). The floor must be capable of supporting a load of 3200 lb (14.2 kN). A wall with a combination of two columns of three 2x4's, or a concrete or brick wall is required.

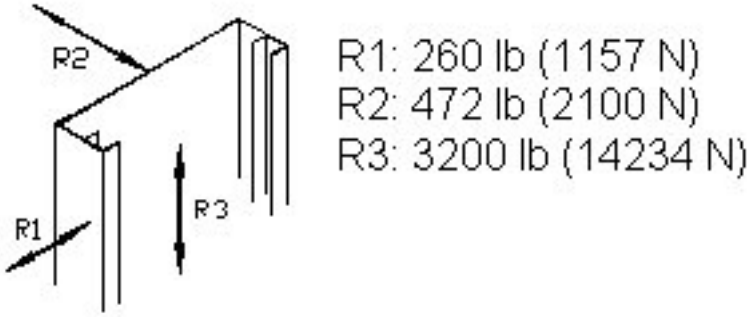

Figure 1: Wall/Floor loading

NOTICE

For R2, 472 lbs is at each bolt of the bracket .(two bolts per bracket). Note that 472 lb is the Dead Load plus the Live Load at Allowable Stress Design levels. The Structural Engineer of Record must calculate the site-specific Seismic Load and Wind Load.

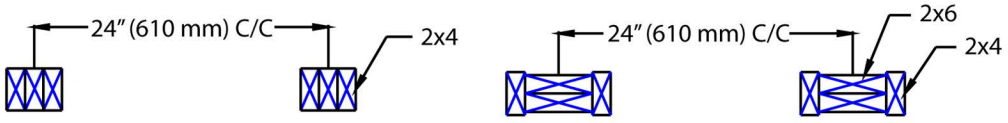

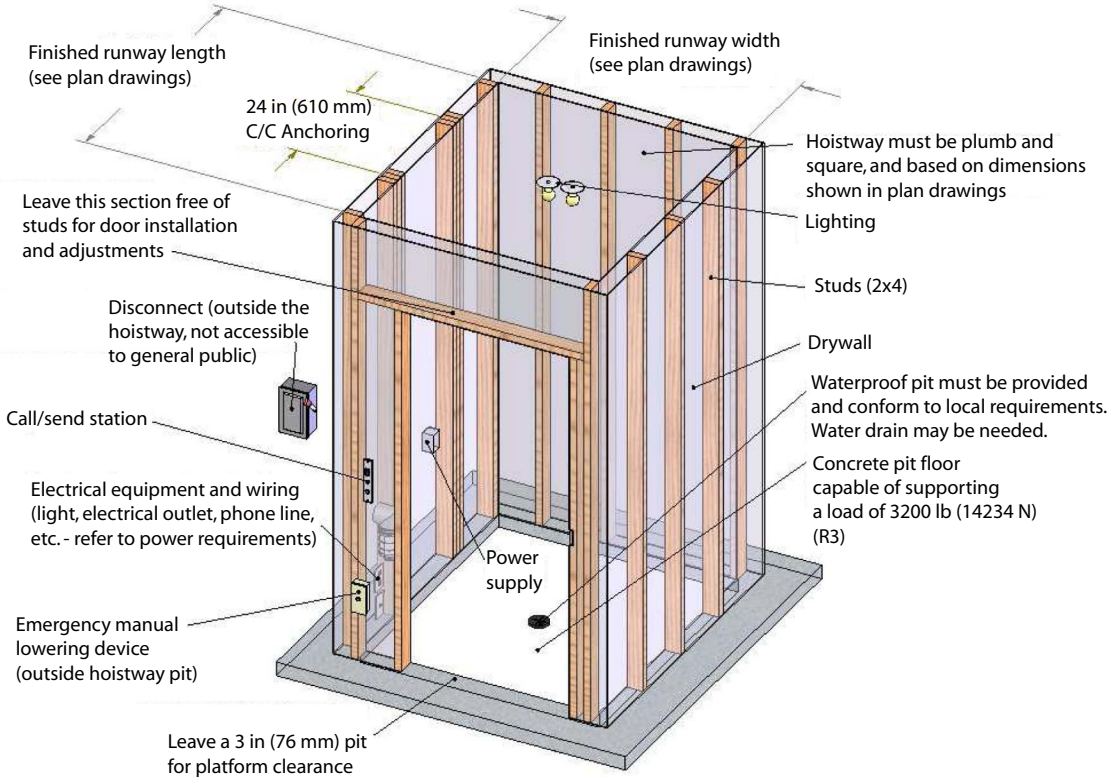

Figure 2: Sample Wooden Support Wall Configuration

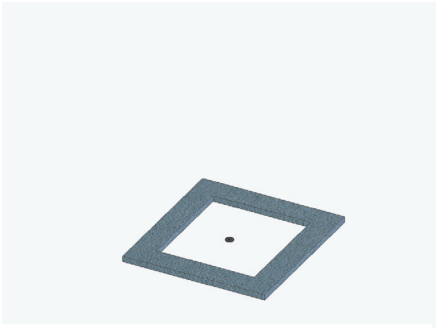

Step 1
Pit (by others)

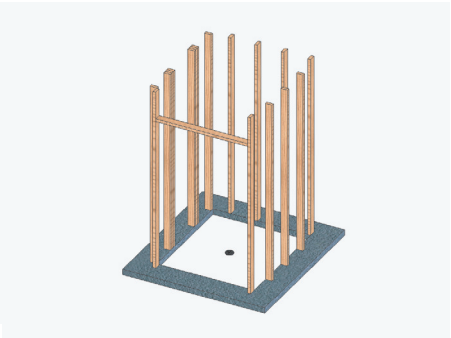

Step 2
Studs (by others)

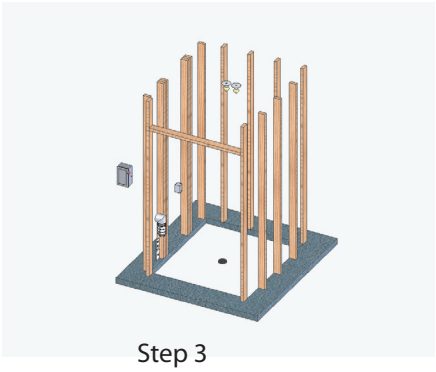

Step 3
Electrical wiring
and equipment (by others)

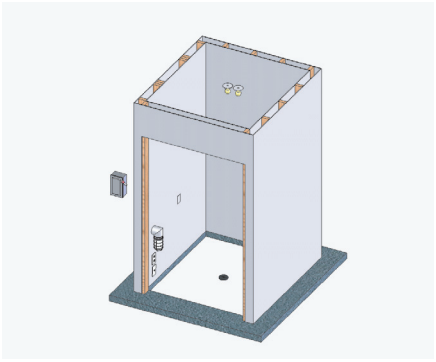

Step 4
Drywall (by others)

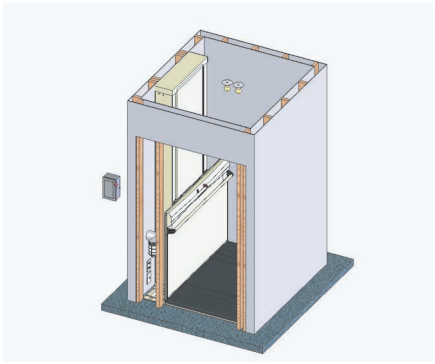

Step 5
Door positioning
(by Savaria Concord installer)

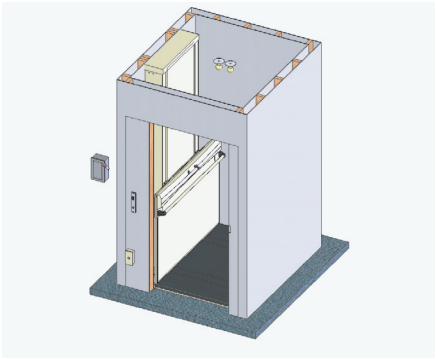

Step 6
Door drywall (by others)

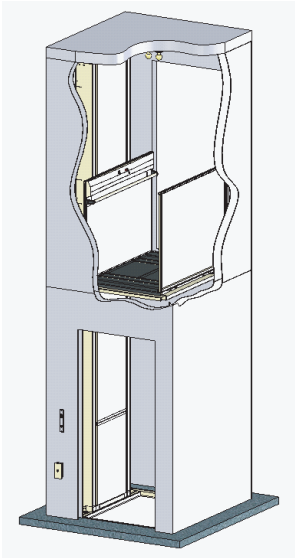

Completed hoistway

Figure 3: Wooden Hoistway Construction - Recommended Steps

•

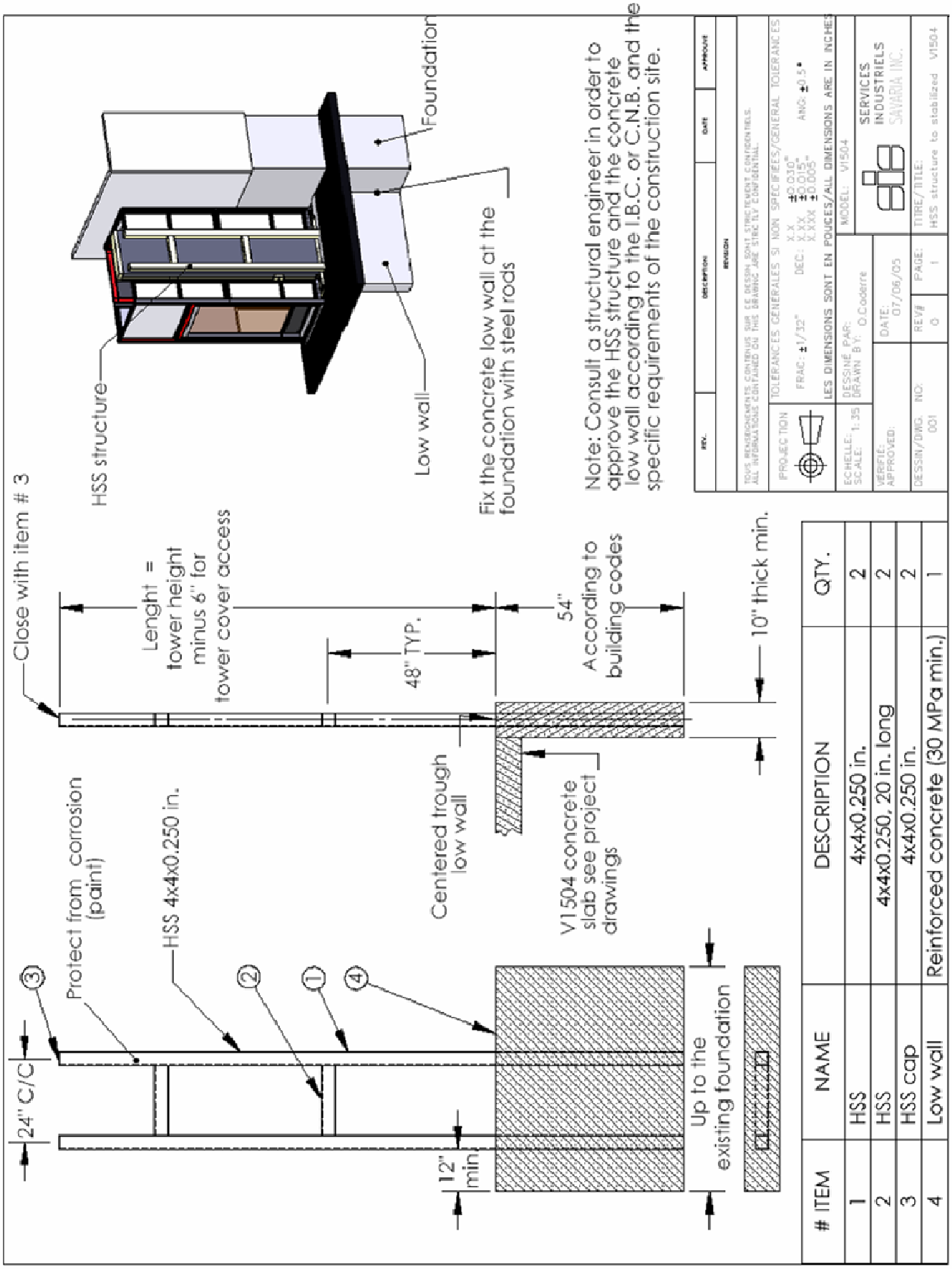

# ITEM	NAME	DESCRIPTION	QTY.
1	HSS	4x4x0.250 in.	2
2	HSS	4x4x0.250, 20 in. long	2
3	HSS cap	4x4x0.250 in.	2
4	Low wall	Reinforced concrete (30 MPa min.)	1

Figure 4: Sample Concrete/Steel Structure Configuration

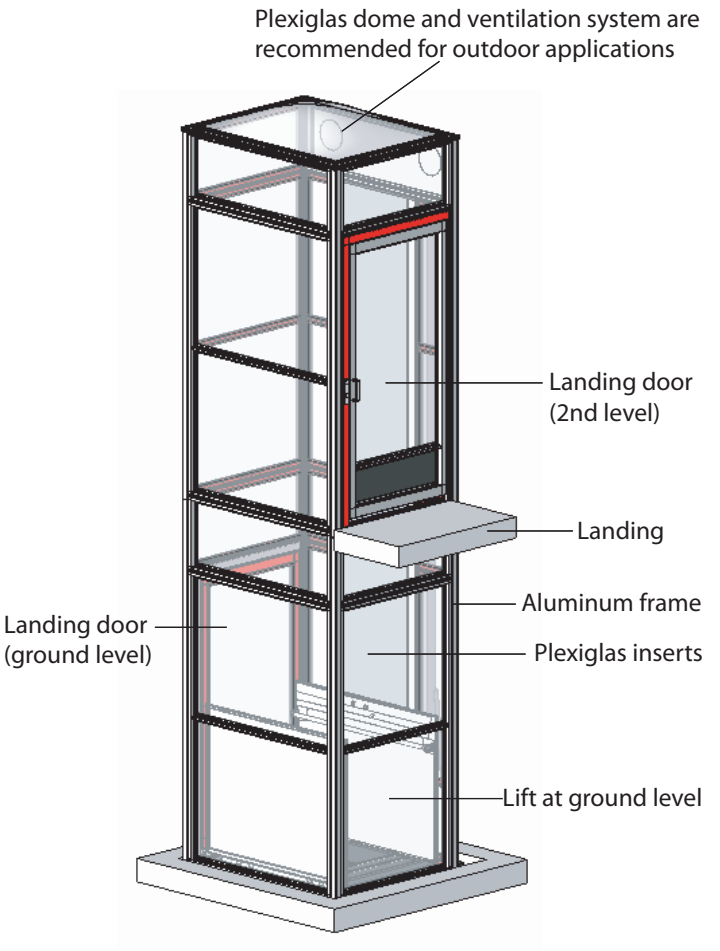



Figure 5: Sample Outdoor Enclosure Application

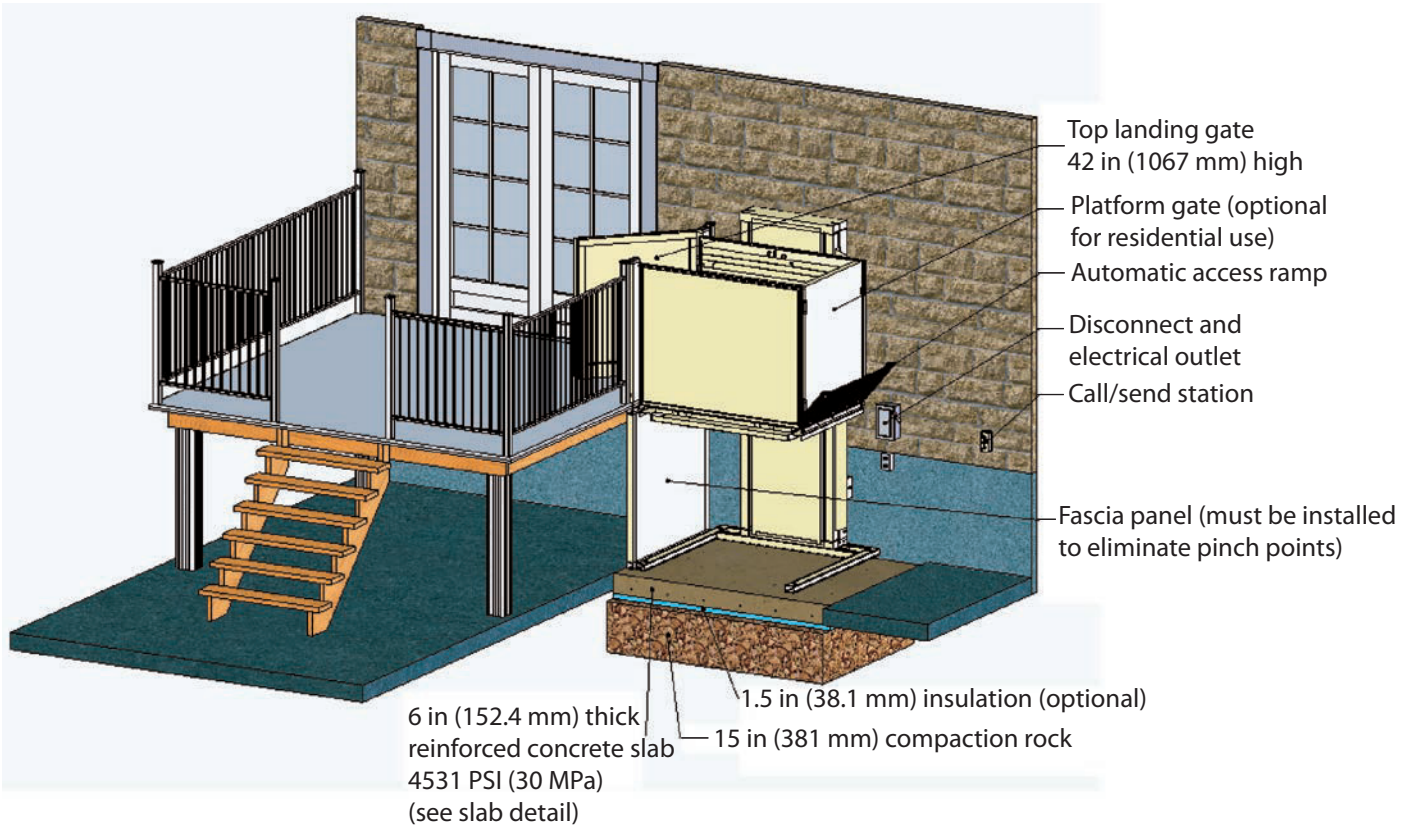

Figure 6: Sample Unenclosed Outdoor Application

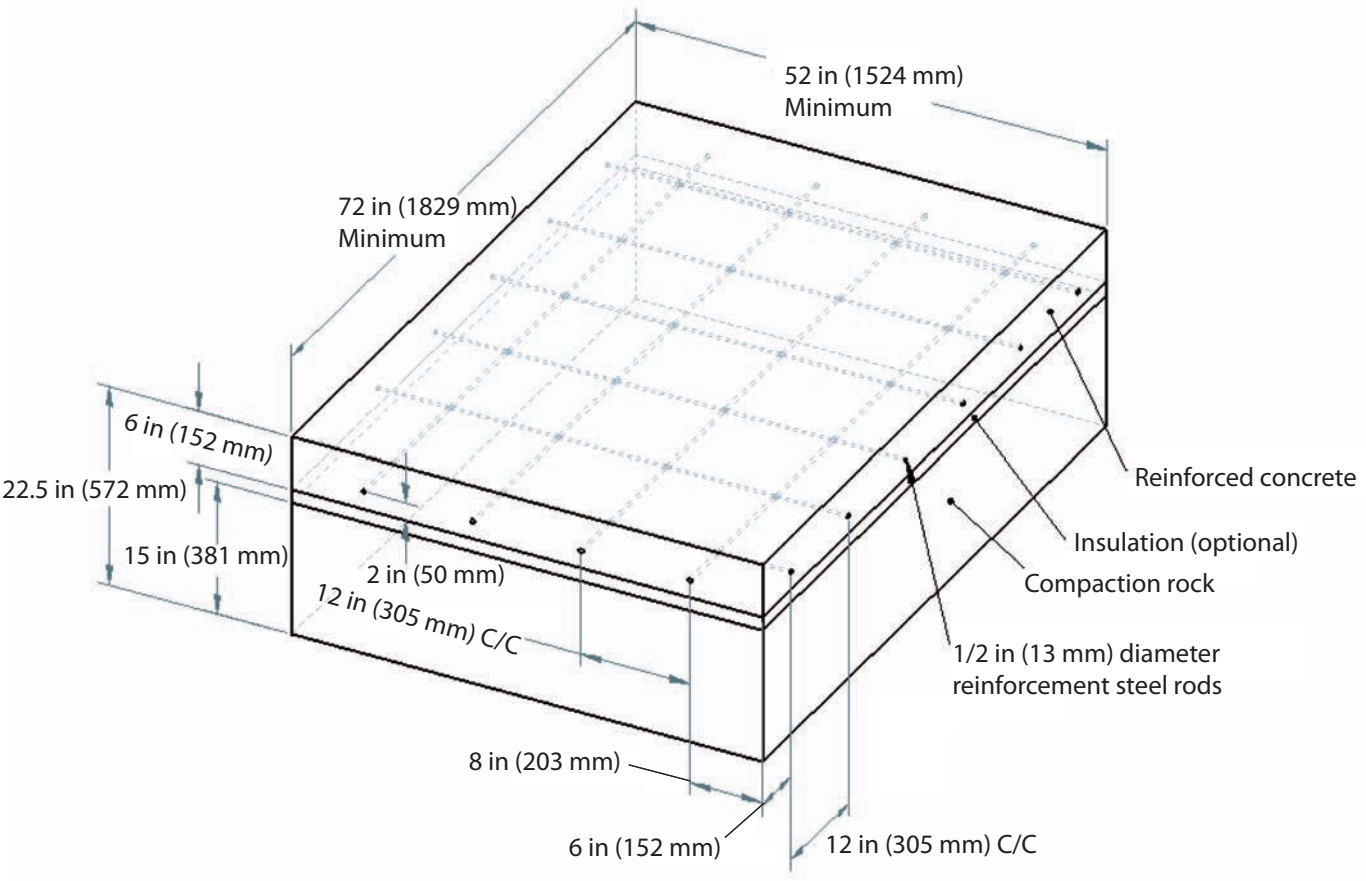

Figure 7: Concrete Slab Details

Load Calculations

SAVARIA V1504 - UNENCLOSED UNIT								
Vertical Platform lift anchoring loads / worst case scenario								
42x60" platform, Hydraulic Drive, Hoistway application						For bracket spacing of 36"	No Safety factor	
Lift Model Inches	MAX Tower Weight T (lbs)	-	MAX Car Weight CAR (lbs)	MAX Capacity CAP (lbs)	Support height every 35" after base Last position H in inches	MAX Wall Support loads per mounting points (doubles the values = per bracket) Ra = Rb (lbf)	Pit load With support legs P (lbf)	Estimated Impact load R3 (lbf)
48	690		700	750	92	583	2140	3616
60	757		700	750	102	583	2207	3616
72	797		700	750	124	583	2247	3616
96	910		700	750	138	583	2360	3616
108	983		700	750	160	583	2433	3616
120	1024		700	750	172	583	2474	3616

SAVARIA V1504 - 80" CAB REQUIREMENTS								
Vertical Platform lift anchoring loads / worst case scenario								
36x60" platform, Hydraulic Drive, Hoistway application						For bracket spacing of 36"	No Safety factor	
Lift Model Inches	MAX Tower Weight T (lbs)	-	MAX Car Weight CAR (lbs)	MAX Capacity CAP (lbs)	Support height every 35" after base Last position H in inches	MAX Wall Support loads per mounting points (doubles the values = per bracket) Ra = Rb (lbf)	Pit load With support legs P (lbf)	Estimated Impact load R3 (lbf)
48	690		700	750	92	583	2140	3616
60	757		700	750	102	583	2207	3616
72	797		700	750	124	583	2247	3616
96	910		700	750	138	583	2360	3616
108	983		700	750	160	583	2433	3616
120	1024		700	750	172	583	2474	3616
144	1137		700	750	196	583	2587	3616
168	1348		700	750	218	583	2798	3616
192	1471		700	750	242	583	2921	3616
216	1588		700	750	266	583	3038	3616
240	1700		700	750	290	583	3150	3616
264	1821		700	750	312	583	3271	3616
276	1882		700	750	326	583	3332	3616

SAVARIA V1504 - HOISTWAY APPLICATION								
Vertical Platform lift anchoring loads / worst case scenario								
42x60" platform, Hydraulic Drive, Hoistway application						For bracket spacing of 36"	No Safety factor	
Lift Model Inches	MAX Tower Weight T (lbs)	-	MAX Car Weight CAR (lbs)	MAX Capacity CAP (lbs)	Support height every 35" after base Last position H in inches	MAX Wall Support loads per mounting points (doubles the values = per bracket) Ra = Rb (lbf)	Pit load With support legs P (lbf)	Estimated Impact load R3 (lbf)
48	630		700	750	92	526	1930	3285
60	697		700	750	102	526	1997	3285
72	737		700	750	124	526	2037	3285
96	850		700	750	138	526	2150	3285
108	923		700	750	160	526	2223	3285
120	964		700	750	172	526	2264	3285
144	1077		700	750	196	526	2377	3285
168	1288		700	750	218	526	2588	3285
192	1411		700	750	242	526	2711	3285
216	1528		700	750	266	526	2828	3285
240	1640		700	750	290	526	2940	3285
264	1761		700	750	312	526	3061	3285
276	1822		700	750	326	526	3122	3285

SAVARIA V1504 - ALUMINUM / PLEXIGLASS INSERTS								
Vertical Platform lift anchoring loads / worst case scenario								
42x60" platform, Hydraulic Drive, Hoistway application						For bracket spacing of 36"	No Safety factor	
Lift Model Inches	MAX Tower Weight T (lbs)	MAX Enclosure Weight T (lbs)	MAX Car Weight CAR (lbs)	MAX Capacity CAP (lbs)	Support height every 35" after base Last position H in inches	MAX Wall Support loads per mounting points (doubles the values = per bracket) Ra = Rb (lbf)	Pit load With support legs P (lbf)	Estimated Impact load R3 (lbf)
48	836	652	550	750	92	526	2789	3285
60	894	688	550	750	102	526	2882	3285
72	950	723	550	750	124	526	2973	3285
96	1063	793	550	750	138	526	3156	3285
108	1120	828	550	750	160	526	3248	3285
120	1169	863	550	750	172	526	3332	3285
144	1282	933	550	750	196	526	3515	3285
168	1444	1003	550	750	218	526	3747	3285
192	1568	1073	550	750	242	526	3941	3285
216	1677	1143	550	750	266	526	4120	3285
240	1797	1213	550	750	290	526	4310	3285
264	1917	1283	550	750	312	526	4500	3285
276	1979	1318	550	750	326	526	4597	3285

SAVARIA V1504 - TEMPERED GLASS								
Vertical Platform lift anchoring loads / worst case scenario								
42x60" platform, Hydraulic Drive, Hoistway application						For bracket spacing of 36"	No Safety factor	
Lift Model Inches	MAX Tower Weight T (lbs)	MAX Enclosure Weight T (lbs)	MAX Car Weight CAR (lbs)	MAX Capacity CAP (lbs)	Support height every 35" after base Last position H in inches	MAX Wall Support loads per mounting points (doubles the values = per bracket) Ra = Rb (lbf)	Pit load With support legs P (lbf)	Estimated Impact load R3 (lbf)
48	836	1192	550	750	92	526	3328	3285
60	894	1256	550	750	102	526	3450	3285
72	950	1320	550	750	124	526	3570	3285
96	1063	1448	550	750	138	526	3811	3285
108	1120	1512	550	750	160	526	3932	3285
120	1169	1576	550	750	172	526	4045	3285
144	1282	1703	550	750	196	526	4285	3285
168	1444	1831	550	750	218	526	4575	3285
192	1568	1959	550	750	242	526	4827	3285
216	1677	2087	550	750	266	526	5064	3285
240	1797	2215	550	750	290	526	5312	3285
264	1917	2342	550	750	312	526	5559	3285
276	1979	2406	550	750	326	526	5685	3285

SAVARIA V1504 - LAMINATED GLASS								
Vertical Platform lift anchoring loads / worst case scenario								
42x60" platform, Hydraulic Drive, Hoistway application						For bracket spacing of 36"	No Safety factor	
Lift Model Inches	MAX Tower Weight T (lbs)	MAX Enclosure Weight T (lbs)	MAX Car Weight CAR (lbs)	MAX Capacity CAP (lbs)	Support height every 35" after base Last position H in inches	MAX Wall Support loads per mounting points (doubles the values = per bracket) Ra = Rb (lbf)	Pit load With support legs P (lbf)	Estimated Impact load R3 (lbf)
48	836	1376	550	750	92	526	3512	3285
60	894	1450	550	750	102	526	3644	3285
72	950	1523	550	750	124	526	2772	3285
96	1063	1671	550	750	138	526	4034	3285
108	1120	1717	550	750	160	526	4137	3285
120	1169	1818	550	750	172	526	4287	3285
144	1282	1966	550	750	196	526	4548	3285
168	1444	2113	550	750	218	526	4857	3285
192	1568	2261	550	750	242	526	5129	3285
216	1677	2408	550	750	266	526	5385	3285
240	1797	2556	550	750	290	526	5653	3285
264	1917	2703	550	750	312	526	5920	3285
276	1979	2777	550	750	326	526	6056	3285

V-1504 Prestige								
Vertical Platform lift anchoring loads / worst case scenario								
Vertical Platform lift anchoring loads / worst case scenario								
42x60" platform, Hydraulic Drive, Hoistway application						For bracket spacing of 36"	No Safety factor	
Lift Model Inches	MAX Tower Weight T (lbs)	Prestige Weight T (lbs)	MAX Car Weight CAR (lbs)	MAX Capacity CAP (lbs)	Support height every 36" after base Last position H in inches	MAX Wall Support loads per mounting points (doubles the values = per bracket) Ra = Rb (lbf)	Pit load *If no support legs P (lbs)	Estimated Impact load R3 (lbf)
48	500	1875	500	750	92	472	3625	3200
60	550	2025	500	750	102	472	3825	3200
72	625	2175	500	750	124	472	4050	3200
96	725	2475	500	750	138	472	4450	3200
108	800	2625	500	750	160	472	4675	3200
120	875	2775	500	750	172	472	4900	3200
144	1000	3075	500	750	196	472	5325	3200
168	1025	3375	500	750	218	472	5650	3200
192	1250	3675	500	750	242	472	6175	3200
216	1350	3975	500	750	266	472	5575	3200
240	1475	4275	500	750	290	472	7000	3200
264	1575	4575	500	750	312	472	7400	3200
276	1625	4875	500	750	326	472	7750	3200

NOTICE

N.B.
Calculations do not include forces due to wind, seismic loading, any environmental loading and forces due to acceleration.
Calculations are assuming that the load is supported only by the 2 brackets surrounding the lift (worst case scenario).
A minimum Safety Factor of 4 is recommended; check local code requirements or building special requirements.
If the building does not allow all support bracket attachment positions, R2 must be increased accordingly
If the unit is ordered with base legs, the Pit Load related to cab weight and capacity will be spread on the footprint.

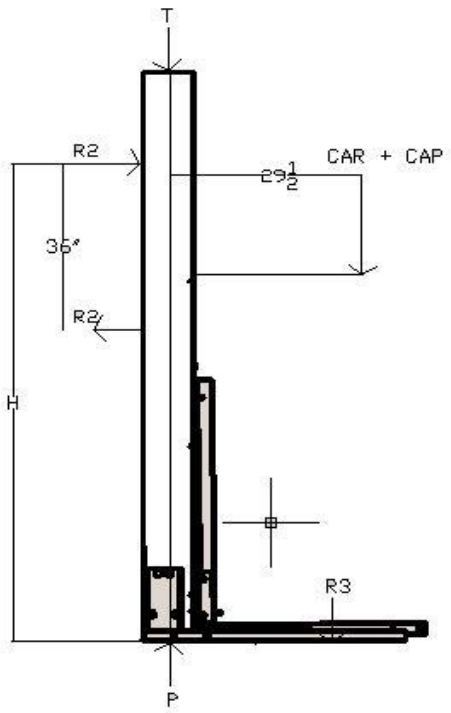

Cab Type

Type 1 Cabs

For type 1 cabs, entry and exit are available from only one end of the platform.

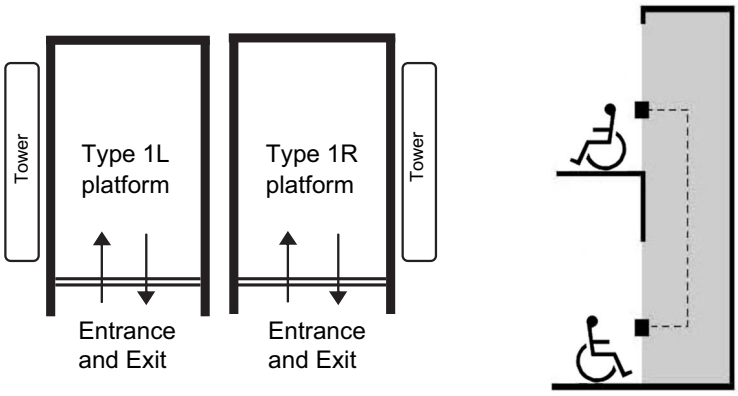

Figure 8: Type 1 Left and Right

Type 2 Cabs

For type 2 cabs, entry and exit are available from both ends of the platform.

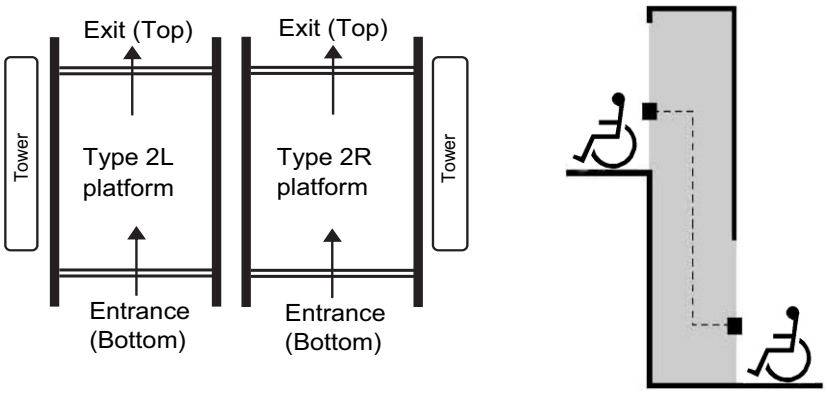

Figure 9: Type 2

Type 3 and 4 Cabs

For type 3 and 4 cabs, entry and exit are available from one end and one side of the platform.

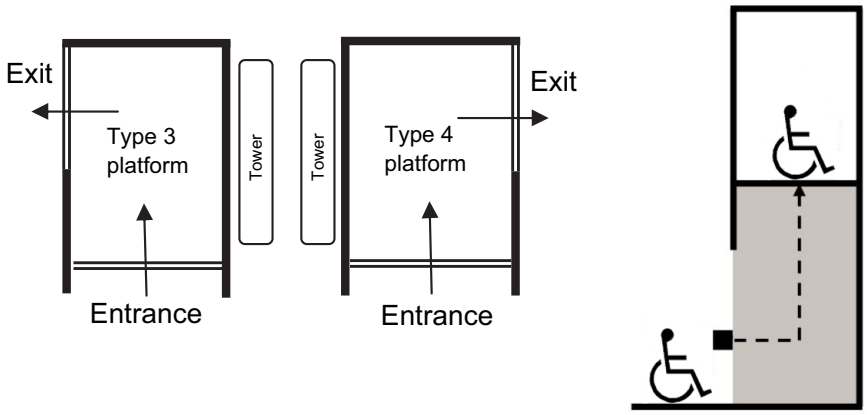

Figure 10: Type 3 and 4

Drawings

- Elevation and plan view, hoistway application (Type 1L)
- Elevation and plan view, hoistway application (Type 1R)
- Elevation and plan view, hoistway application (Type 2)
- Elevation and plan view, hoistway application (Type 3)
- Elevation and plan view, hoistway application (Type 3, 45″ opening)
- Elevation and plan view, hoistway application (Type 4)
- Elevation and plan view, hoistway application (Type 4, 45″ opening)
- Elevation and plan view, enclosure application (Type 1L)
- Elevation and plan view, enclosure application (Type 1R)
- Elevation and plan view, enclosure application (Type 2)
- Elevation and plan view, enclosure application (Type 3, 45″ opening)
- Elevation and plan view, enclosure application (Type 4, 45″ opening)
- Auto door, left-hand
- Auto door, right-hand
- Manual door, left-hand
- Manual door, right-hand
- Prodoor auto, left-hand
- Prodoor auto, right-hand
- Prodoor manual, left-hand
- Prodoor manual, right-hand
- Prodoor installation (drywall)
- Auto half gate, left-hand
- Auto half gate, right-hand
- Manual half gate, left-hand
- Manual half gate, right-hand
- DuraSwing on half gate, right-hand
- DuraSwing on half gate, right-hand, 45" opening
- DuraSwing on half gate, left-hand
- DuraSwing on half gate, left-hand, 45" opening
- Seat dimensions
- Remote controller/pump box dimensions

Note:

NOTICE

Refer to the Architects & Builders portion of our main website (www.savaria.com) for other door/gate sizes.

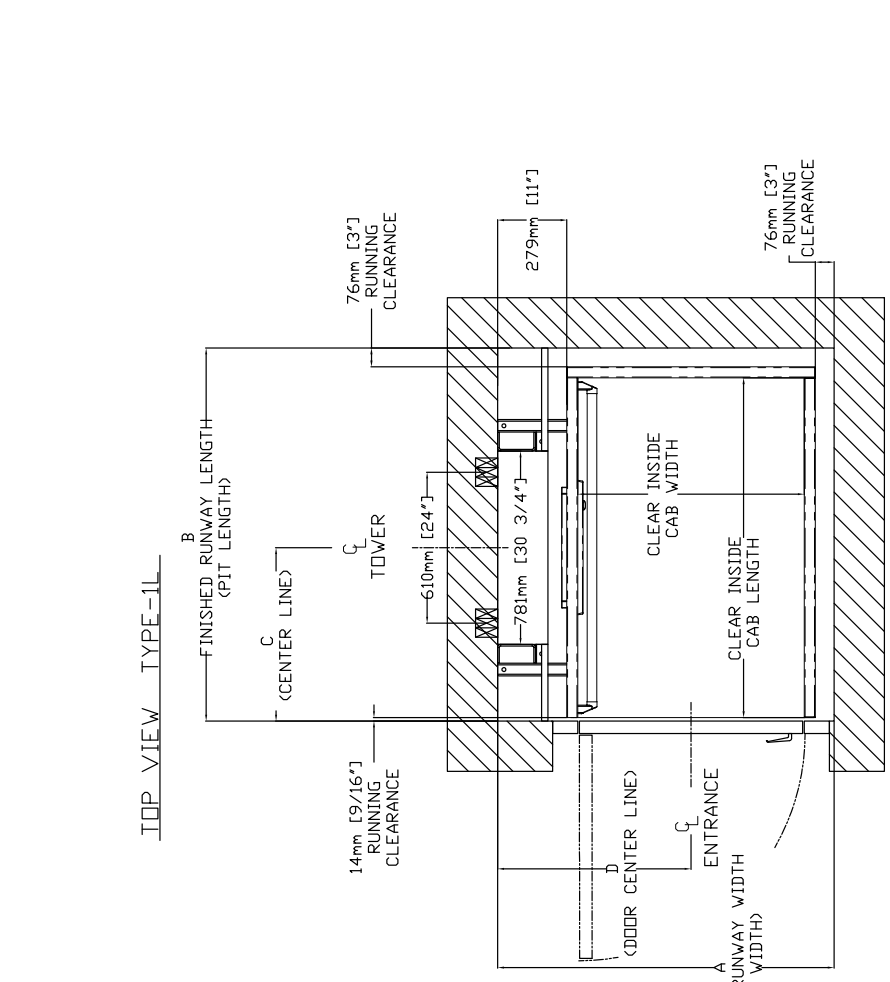

TABLE 2- HOISTWAY DIMENSION

CLEAR INSIDE CAB WIDTH		CLEAR INSIDE CAB LENGTH		A FINISHED RUNWAY WIDTH		B FINISHED RUNWAY LENGTH		C TOWER CENTER LINE		D DOOR CENTER LINE (IN CASE OF 36" DOOR)	
mm	Inches	mm	Inches	mm	Inches	mm	Inches	mm	Inches	mm	Inches
914	36	1219	48	1359	53 1/2	1354	53 5/16	624	24 9/16	781	30 3/4
914	36	1372	54	1359	53 1/2	1507	59 5/16	700	27 9/16	781	30 3/4
914	36	1524	60	1359	53 1/2	1659	65 5/16	776	30 9/16	781	30 3/4
1067	42	1219	48	1511	59 1/2	1354	53 5/16	624	24 9/16	857	33 3/4
1067	42	1372	54	1511	59 1/2	1507	59 5/16	700	27 9/16	857	33 3/4
1067	42	1524	60	1511	59 1/2	1659	65 5/16	776	30 9/16	857	33 3/4

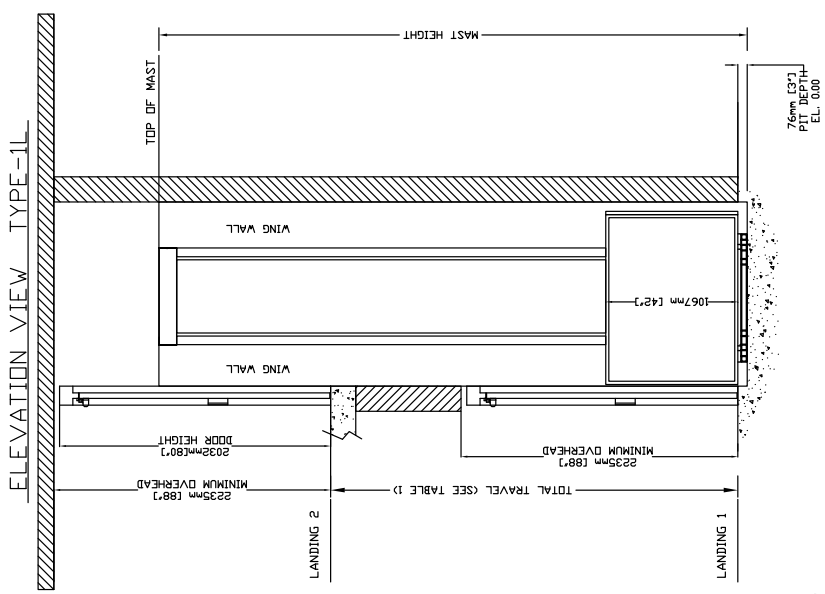

TABLE 1- MAST HEIGHT*

Max. Travel mm (Inches)	Extension Height mm (Inches)					Mast Height with 4.188" CAP	
	2388 (94")	1778 (70")	1168 (46")	559 (22")	254 (10")	mm	Inches
1219 (48")	1				1	2748	108.188
1524 (60")	1			1		3053	120.188
1829 (72")	1			1	1	3307	130.188
2438 (96")	1		1		1	3916	154.188
2743 (108")	1	1				4272	168.188
3048 (120")	1	1			1	4526	178.188
3658 (144")	2				1	5136	202.188
4267 (168")	2		1			6050	238.188
4877 (192")	2	1				6660	262.188
5486 (216")	3					7269	286.188
6096 (240")	3			1		7828	308.188
6706 (264")	3		1			8438	332.188
7010 (276")	3		1		1	8692	342.188

*EXAMPLE TABLE WITH 3' PIT. DIMENSIONS VARY WITH TRAVEL

Figure 11: Elevation and plan view, hoistway application (Type 1L

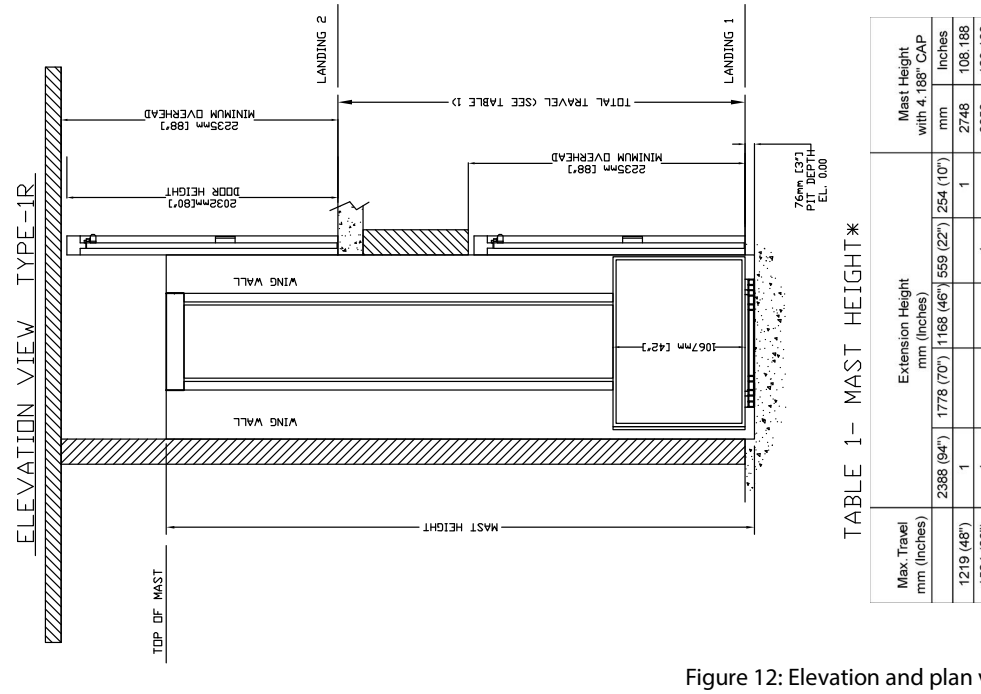

TABLE 1- MAST HEIGHT*

Max. Travel mm (Inches)	Extension Height mm (Inches)					Mast Height with 4.188" CAP	
	2388 (94")	1778 (70")	1168 (46")	559 (22")	254 (10")	mm	Inches
1219 (48")	1				1	2748	108.188
1524 (60")	1			1		3053	120.188
1829 (72")	1			1	1	3307	130.188
2438 (96")	1		1		1	3916	154.188
2743 (108")	1	1				4272	168.188
3048 (120")	1	1			1	4526	178.188
3658 (144")	2				1	5136	202.188
4267 (168")	2		1			6050	238.188
4877 (192")	2	1				6660	262.188
5486 (216")	3					7269	286.188
6096 (240")	3			1		7828	308.188
6706 (264")	3		1			8438	332.188
7010 (276")	3		1		1	8692	342.188

*EXAMPLE TABLE WITH 3' PIT, DIMENSIONS VARY WITH TRAVEL

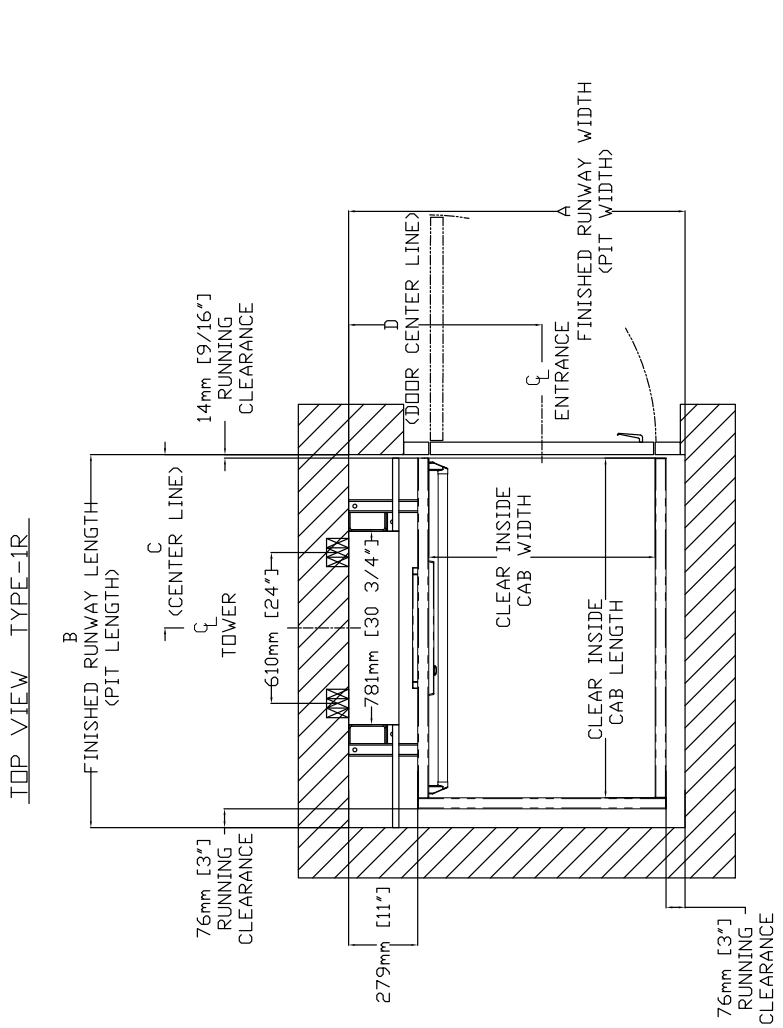

TABLE 2- HOISTWAY DIMENSION

CLEAR INSIDE CAB WIDTH		CLEAR INSIDE CAB LENGTH		A FINISHED RUNWAY WIDTH		B FINISHED RUNWAY LENGTH		C TOWER CENTER LINE		D DOOR CENTER LINE (IN CASE OF 36" DOOR)	
mm	Inches	mm	Inches	mm	Inches	mm	Inches	mm	Inches	mm	Inches
914	36	1219	48	1359	53 1/2	1354	53 5/16	624	24 9/16	781	30 3/4
914	36	1372	54	1359	53 1/2	1507	59 5/16	700	27 9/16	781	30 3/4
914	36	1524	60	1359	53 1/2	1659	65 5/16	776	30 9/16	781	30 3/4
1067	42	1219	48	1511	59 1/2	1354	53 5/16	624	24 9/16	857	33 3/4
1067	42	1372	54	1511	59 1/2	1507	59 5/16	700	27 9/16	857	33 3/4
1067	42	1524	60	1511	59 1/2	1659	65 5/16	776	30 9/16	857	33 3/4

Figure 12: Elevation and plan view, hoistway application (Type 1R)

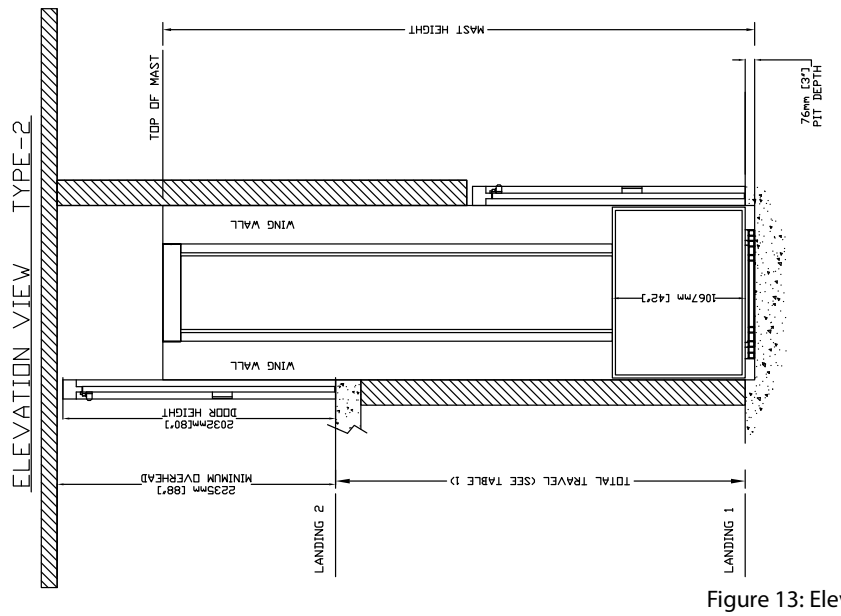

TABLE 1- MAST HEIGHT*

Max. Travel mm (Inches)	Extension Height mm (Inches)					Mast Height with 4.188" CAP	
	2388 (94")	1778 (70")	1168 (46")	559 (22")	254 (10")	mm	Inches
1219 (48")	1				1	2748	108.188
1524 (60")	1			1		3053	120.188
1829 (72")	1			1	1	3307	130.188
2438 (96")	1		1		1	3916	154.188
2743 (108")	1	1				4272	168.188
3048 (120")	1	1			1	4526	178.188
3658 (144")	2				1	5136	202.188
4267 (168")	2		1			6050	238.188
4877 (192")	2	1				6660	262.188
5486 (216")	3					7269	286.188
6096 (240")	3			1		7828	308.188
6706 (264")	3		1			8438	332.188
7010 (276")	3		1		1	8692	342.188

*EXAMPLE TABLE WITH 3" PIT, DIMENSIONS VARY WITH TRAVEL

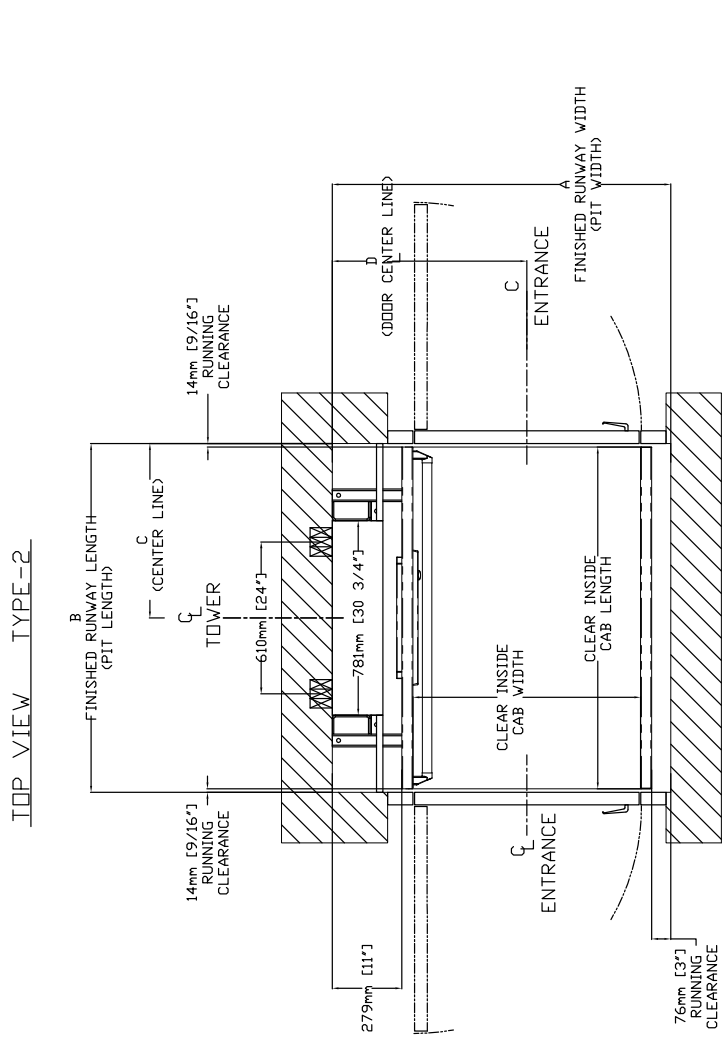

TABLE 2- HOISTWAY DIMENSION

CLEAR INSIDE CAB WIDTH		CLEAR INSIDE CAB LENGTH		A FINISHED RUNWAY WIDTH		B FINISHED RUNWAY LENGTH		C TOWER CENTER LINE		D DOOR CENTER LINE (IN CASE OF 36" DOOR)	
mm	Inches	mm	Inches	mm	Inches	mm	Inches	mm	Inches	mm	Inches
914	36	1219	48	1359	53 1/2	1248	49 1/8	624	24 9/16	781	30 3/4
914	36	1372	54	1359	53 1/2	1400	55 1/8	700	27 9/16	781	30 3/4
914	36	1524	60	1359	53 1/2	1553	61 1/8	776	30 9/16	781	30 3/4
1067	42	1219	48	1511	59 1/2	1248	49 1/8	624	24 9/16	857	33 3/4
1067	42	1372	54	1511	59 1/2	1400	55 1/8	700	27 9/16	857	33 3/4
1067	42	1524	60	1511	59 1/2	1553	61 1/8	776	30 9/16	857	33 3/4

Figure 13: Elevation and plan view, hoistway application (Type 2)

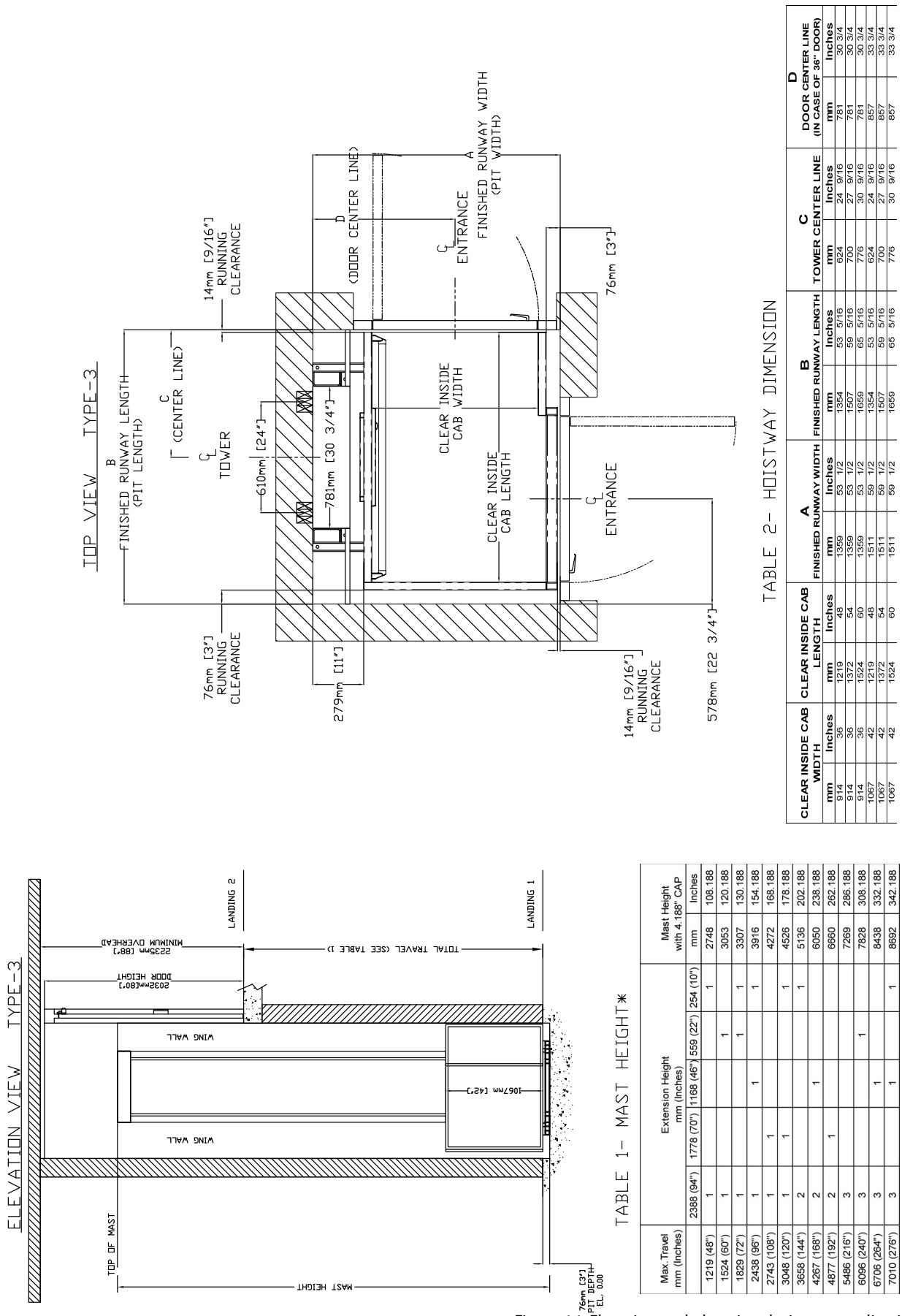

TABLE 2- HOISTWAY DIMENSION

CLEAR INSIDE CAB WIDTH		CLEAR INSIDE CAB LENGTH		A FINISHED RUNWAY WIDTH		B FINISHED RUNWAY LENGTH		C TOWER CENTER LINE		D DOOR CENTER LINE (IN CASE OF 36" DOOR)	
mm	Inches	mm	Inches	mm	Inches	mm	Inches	mm	Inches	mm	Inches
914	36	1219	48	1359	53 1/2	1354	53 5/16	624	24 9/16	781	30 3/4
914	36	1372	54	1359	53 1/2	1507	59 5/16	700	27 9/16	781	30 3/4
914	36	1524	60	1359	53 1/2	1659	65 5/16	776	30 9/16	781	30 3/4
1067	42	1219	48	1511	59 1/2	1354	53 5/16	624	24 9/16	857	33 3/4
1067	42	1372	54	1511	59 1/2	1507	59 5/16	700	27 9/16	857	33 3/4
1067	42	1524	60	1511	59 1/2	1659	65 5/16	776	30 9/16	857	33 3/4

TABLE 1- MAST HEIGHT*

Max. Travel mm (Inches)	Extension Height mm (Inches)				Mast Height with 4.188" CAP	
	2388 (94")	1778 (70")	1168 (46")	559 (22")	254 (10")	mm	Inches
1219 (48")	1				1	2748	108.188
1524 (60")	1			1		3053	120.188
1829 (72")	1			1	1	3307	130.188
2438 (96")	1		1		1	3916	154.188
2743 (108")	1	1				4272	168.188
3048 (120")	1	1			1	4526	178.188
3658 (144")	2				1	5136	202.188
4267 (168")	2		1			6050	238.188
4877 (192")	2	1				6660	262.188
5486 (216")	3					7269	286.188
6096 (240")	3			1		7828	308.188
6706 (264")	3		1			8438	332.188
7010 (276")	3		1		1	8692	342.188

*EXAMPLE TABLE WITH 3" PIT, DIMENSIONS VARY WITH TRAVEL

Figure 14: Elevation and plan view, hoistway application (Type 3)

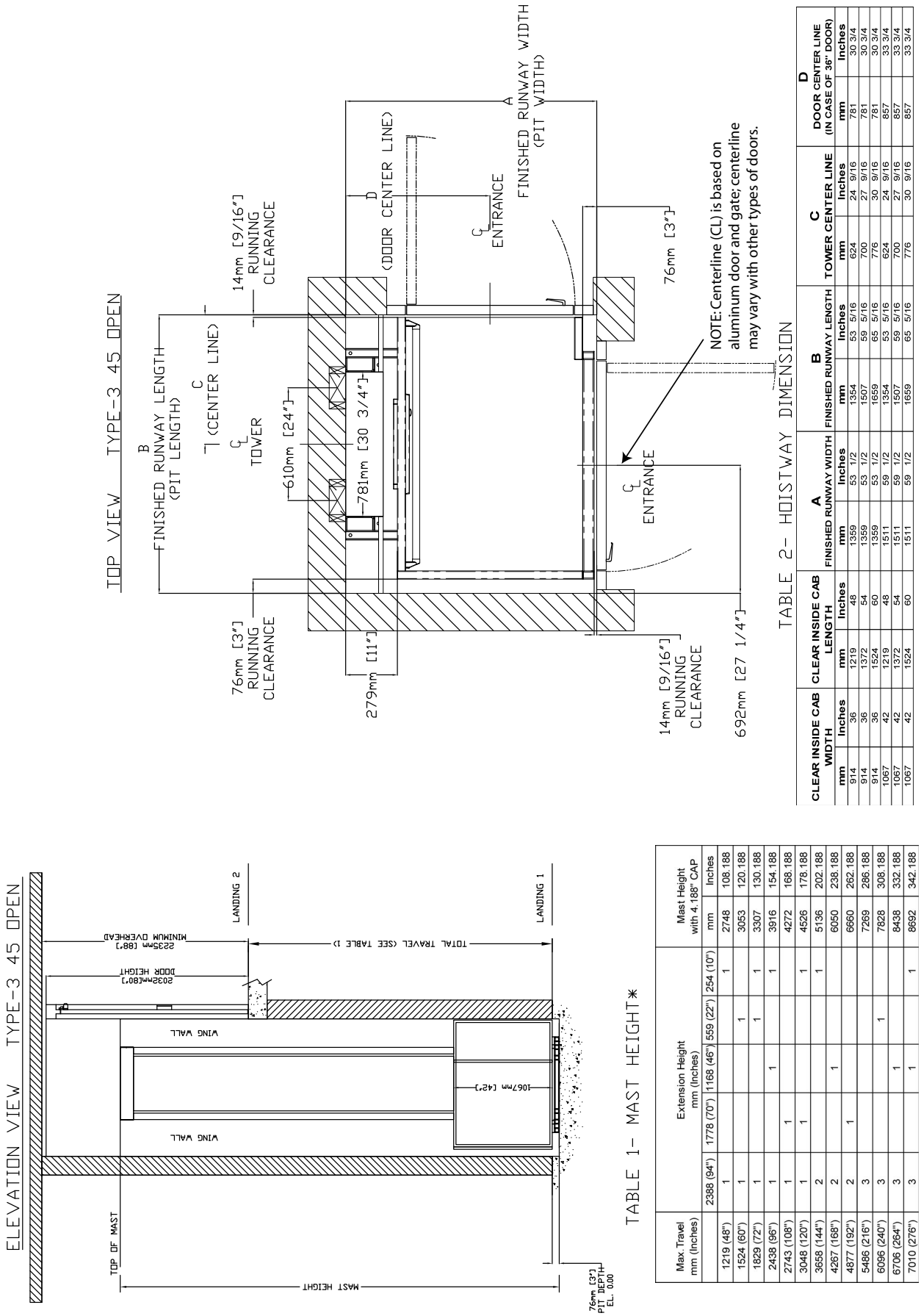

TABLE 2- HOISTWAY DIMENSION

CLEAR INSIDE CAB WIDTH		CLEAR INSIDE CAB LENGTH		A FINISHED RUNWAY WIDTH		B FINISHED RUNWAY LENGTH		C TOWER CENTER LINE		D DOOR CENTER LINE (IN CASE OF 36" DOOR)	
mm	Inches	mm	Inches	mm	Inches	mm	Inches	mm	Inches	mm	Inches
914	36	1219	48	1359	53 1/2	1354	53 5/16	624	24 9/16	781	30 3/4
914	36	1372	54	1359	53 1/2	1507	59 5/16	700	27 9/16	781	30 3/4
914	36	1524	60	1359	53 1/2	1659	65 5/16	776	30 9/16	781	30 3/4
1067	42	1219	48	1511	59 1/2	1354	53 5/16	624	24 9/16	857	33 3/4
1067	42	1372	54	1511	59 1/2	1507	59 5/16	700	27 9/16	857	33 3/4
1067	42	1524	60	1511	59 1/2	1659	65 5/16	776	30 9/16	857	33 3/4

TABLE 1- MAST HEIGHT*

Max. Travel mm (Inches)	Extension Height mm (Inches)					Mast Height with 4.188" CAP	
	2388 (94")	1778 (70")	1168 (46")	559 (22")	254 (10")	mm	Inches
1219 (48")	1				1	2748	108.188
1524 (60")	1			1		3053	120.188
1829 (72")	1			1	1	3307	130.188
2438 (96")	1		1		1	3916	154.188
2743 (108")	1	1				4272	168.188
3048 (120")	1	1			1	4526	178.188
3658 (144")	2				1	5136	202.188
4267 (168")	2		1			6050	238.188
4877 (192")	2	1				6660	262.188
5486 (216")	3					7269	286.188
6096 (240")	3			1		7828	308.188
6706 (264")	3		1			8438	332.188
7010 (276")	3		1		1	8692	342.188

*EXAMPLE TABLE WITH 3" PIT, DIMENSIONS VARY WITH TRAVEL

Figure 15: Elevation and plan view, hoistway application (Type 3, 45" opening)

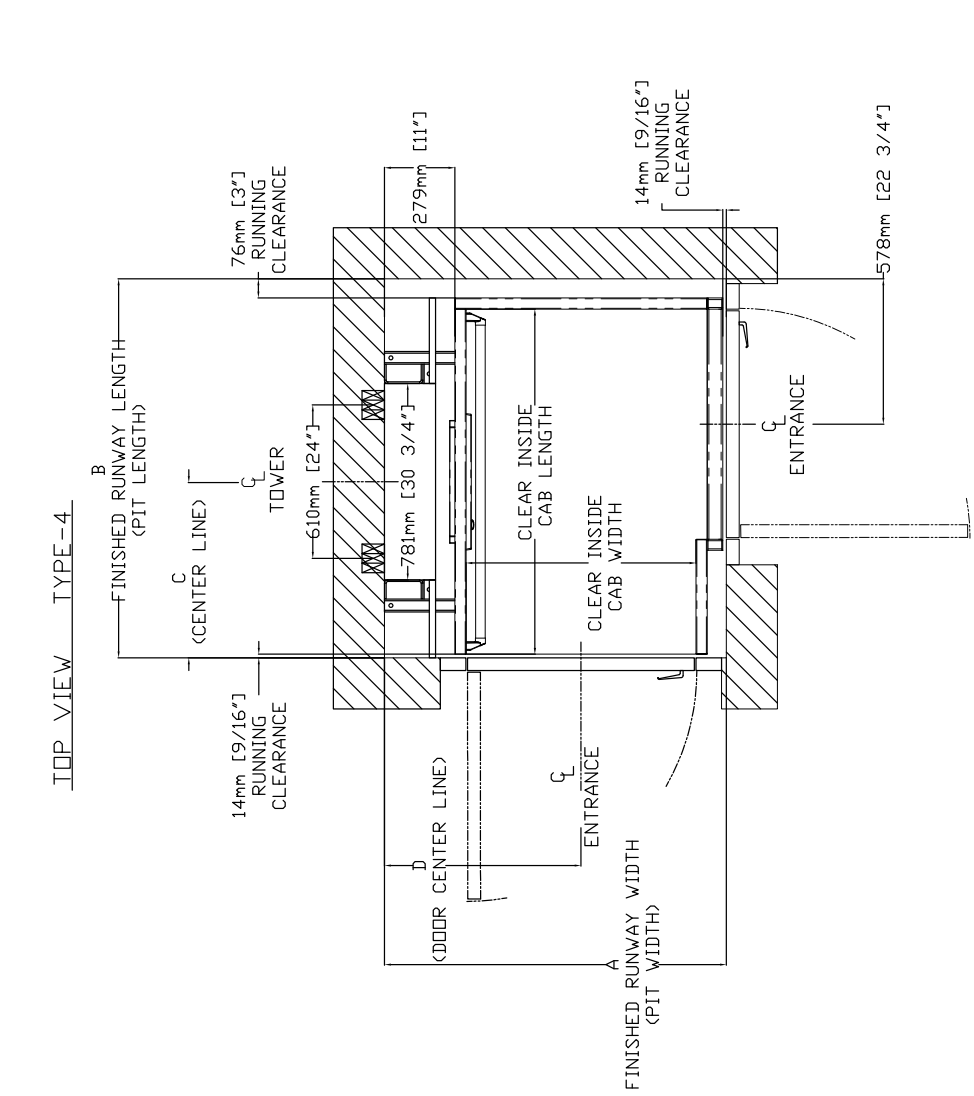

TABLE 2- HOISTWAY DIMENSION

CLEAR INSIDE CAB WIDTH		CLEAR INSIDE CAB LENGTH		A FINISHED RUNWAY WIDTH		B FINISHED RUNWAY LENGTH		C TOWER CENTER LINE		D DOOR CENTER LINE (IN CASE OF 36" DOOR)	
mm	Inches	mm	Inches	mm	Inches	mm	Inches	mm	Inches	mm	Inches
914	36	1219	48	1359	53 1/2	1354	53 5/16	624	24 9/16	781	30 3/4
914	36	1372	54	1359	53 1/2	1507	59 5/16	700	27 9/16	781	30 3/4
914	36	1524	60	1359	53 1/2	1659	65 5/16	776	30 9/16	781	30 3/4
1067	42	1219	48	1511	59 1/2	1354	53 5/16	624	24 9/16	857	33 3/4
1067	42	1372	54	1511	59 1/2	1507	59 5/16	700	27 9/16	857	33 3/4
1067	42	1524	60	1511	59 1/2	1659	65 5/16	776	30 9/16	857	33 3/4

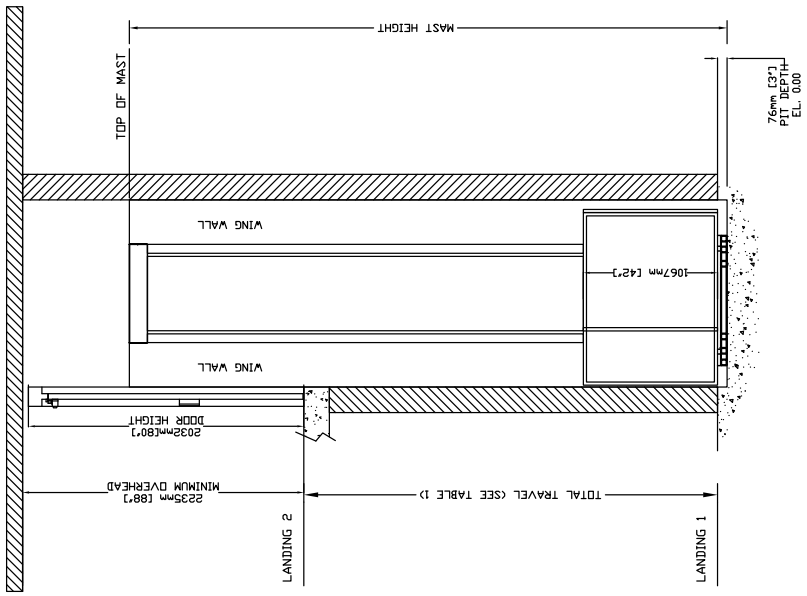

TABLE 1- MAST HEIGHT*

Max. Travel mm (Inches)	Extension Height mm (Inches)					Mast Height with 4.188" CAP	
	2388 (94")	1778 (70")	1168 (46")	559 (22")	254 (10")	mm	Inches
1219 (48")	1				1	2748	108.188
1524 (60")	1			1		3053	120.188
1829 (72")	1			1	1	3307	130.188
2438 (96")	1		1		1	3916	154.188
2743 (108")	1	1				4272	168.188
3048 (120")	1	1			1	4526	178.188
3658 (144")	2				1	5136	202.188
4267 (168")	2		1			6050	238.188
4877 (192")	2	1				6660	262.188
5486 (216")	3					7269	286.188
6096 (240")	3			1		7828	308.188
6706 (264")	3		1			8438	332.188
7010 (276")	3		1		1	8692	342.188

*EXAMPLE TABLE WITH 3' PIT, DIMENSIONS VARY WITH TRAVEL

Figure 16: Elevation and plan view, hoistway application (Type 4)

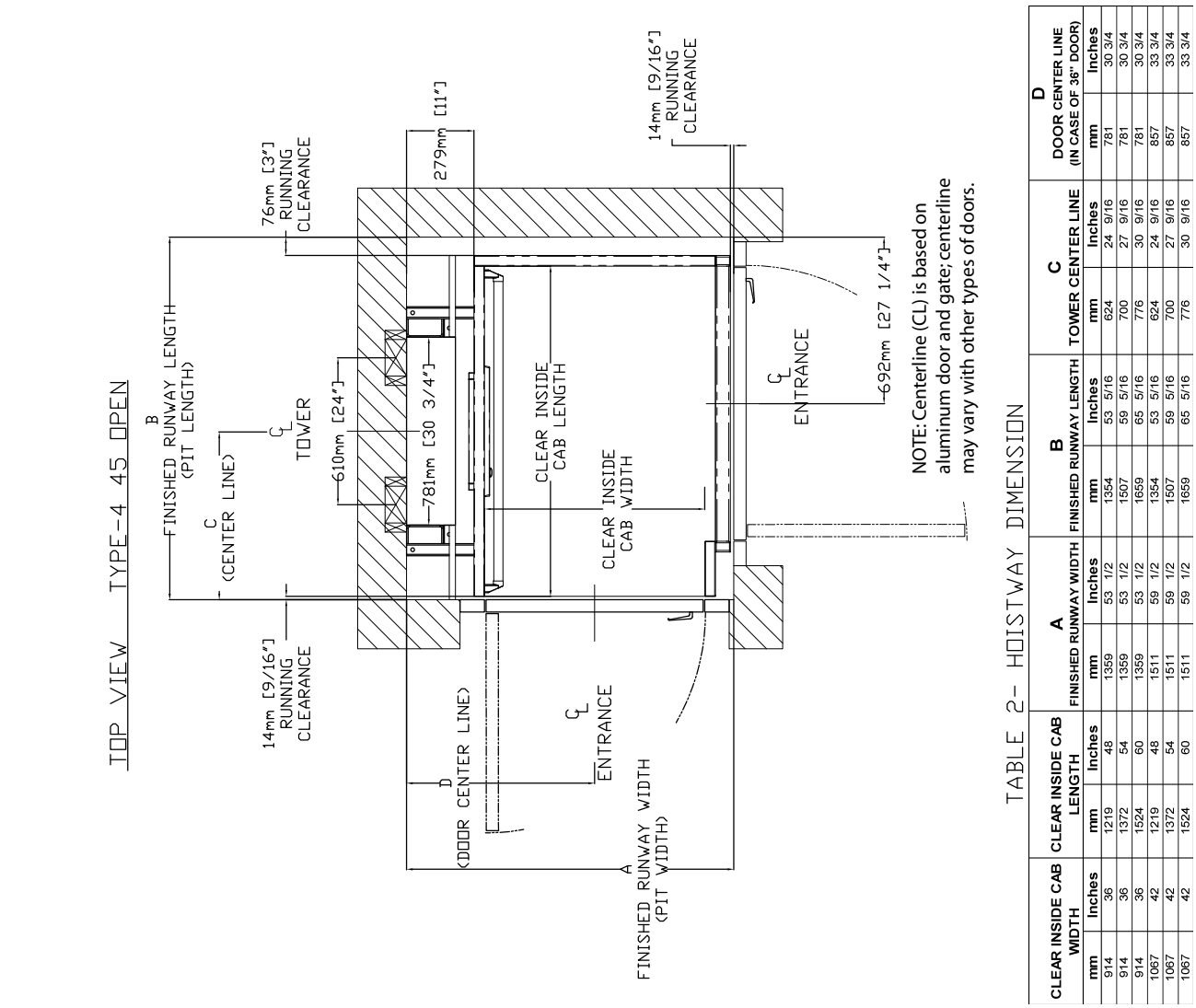

TABLE 2- HOISTWAY DIMENSION

CLEAR INSIDE CAB WIDTH		CLEAR INSIDE CAB LENGTH		A FINISHED RUNWAY WIDTH		B FINISHED RUNWAY LENGTH		C TOWER CENTER LINE		D DOOR CENTER LINE (IN CASE OF 36" DOOR)	
mm	Inches	mm	Inches	mm	Inches	mm	Inches	mm	Inches	mm	Inches
914	36	1219	48	1359	53 1/2	1354	53 5/16	624	24 9/16	781	30 3/4
914	36	1372	54	1359	53 1/2	1507	59 5/16	700	27 9/16	781	30 3/4
914	36	1524	60	1359	53 1/2	1659	65 5/16	776	30 9/16	781	30 3/4
1067	42	1219	48	1511	59 1/2	1354	53 5/16	624	24 9/16	857	33 3/4
1067	42	1372	54	1511	59 1/2	1507	59 5/16	700	27 9/16	857	33 3/4
1067	42	1524	60	1511	59 1/2	1659	65 5/16	776	30 9/16	857	33 3/4

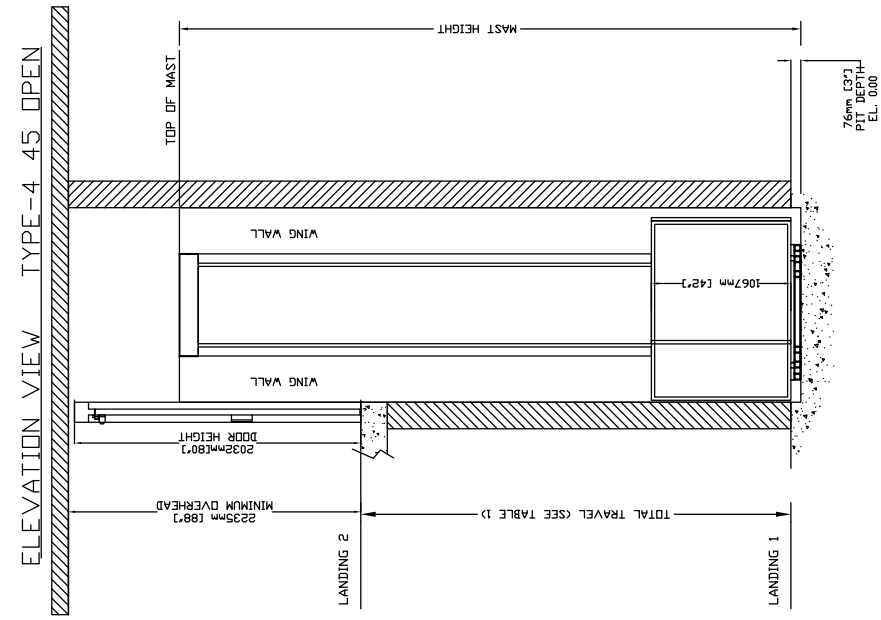

TABLE 1- MAST HEIGHT*

Max. Travel mm (Inches)	Extension Height mm (Inches)					Mast Height with 4.188" CAP	
	2388 (94")	1778 (70")	1168 (46")	559 (22")	254 (10")	mm	Inches
1219 (48")	1				1	2748	108.188
1524 (60")	1			1		3053	120.188
1829 (72")	1			1	1	3307	130.188
2438 (96")	1		1		1	3916	154.188
2743 (108")	1	1				4272	168.188
3048 (120")	1	1			1	4526	178.188
3658 (144")	2				1	5136	202.188
4267 (168")	2		1			6050	238.188
4877 (192")	2	1				6660	262.188
5486 (216")	3					7269	286.188
6096 (240")	3			1		7828	308.188
6706 (264")	3		1			8438	332.188
7010 (276")	3		1		1	8692	342.188

*EXAMPLE TABLE WITH 3" PIT, DIMENSIONS VARY WITH TRAVEL

Figure 17: Elevation and plan view, hoistway application (Type 4, 45" opening)

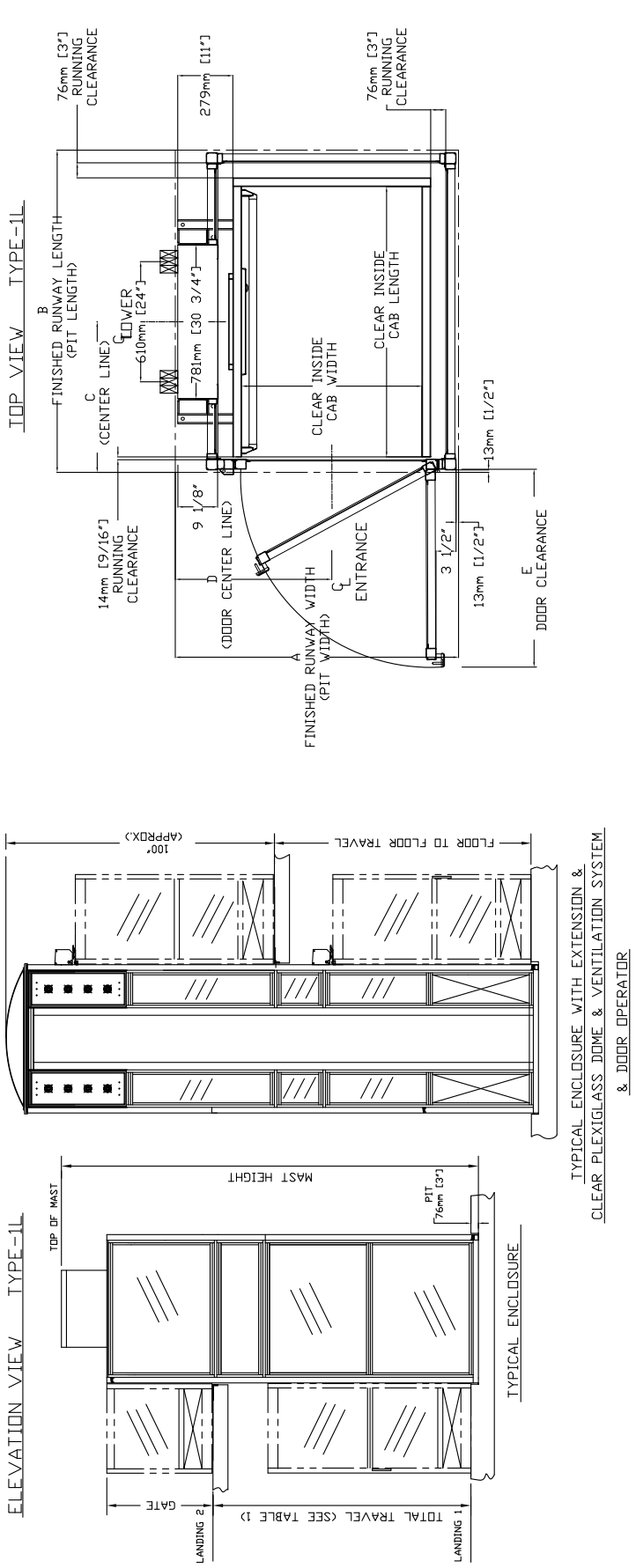

TABLE 2 - ENCLOSURE DIMENSION

CLEAR INSIDE CAB WIDTH		CLEAR INSIDE CAB LENGTH		A FINISHED RUNWAY WIDTH		B FINISHED RUNWAY LENGTH		C TOWER CENTER LINE		D DOOR CENTER LINE (IN CASE OF 36" DOOR)		E DOOR CLEARANCE	
mm	Inches	mm	Inches	mm	Inches	mm	Inches	mm	Inches	mm	Inches	mm	Inches
914	36	1219	48	1437	56 9/16	1483	58 3/8	687	27 1/16	794	31 1/4	1100	43 5/16
914	36	1372	54	1437	56 9/16	1635	64 3/8	764	30 1/16	794	31 1/4	1100	43 5/16
914	36	1524	60	1437	56 9/16	1788	70 3/8	840	33 1/16	794	31 1/4	1100	43 5/16
1067	42	1219	48	1589	62 9/16	1483	58 3/8	687	27 1/16	870	34 1/4	1253	49 5/16
1067	42	1372	54	1589	62 9/16	1635	64 3/8	764	30 1/16	870	34 1/4	1253	49 5/16
1067	42	1524	60	1589	62 9/16	1788	70 3/8	840	33 1/16	870	34 1/4	1253	49 5/16

TABLE 1- MAST HEIGHT*

Max. Travel mm (Inches)	Extension Height mm (inches)					Mast Height Approx with Gate with 4.188" CAP	
	2388 (94")	1778 (70")	1168 (46")	559 (22")	254 (10")	mm	Inches
1219 (48")	1				1	2748	108.188
1524 (60")	1			1		3053	120.188
1829 (72")	1		1			3662	144.188
2438 (96")	1	1				4272	168.188
2743 (108")	1	1				4272	168.188
3048 (120")	2					4882	192.188
3658 (144")	2			1		5440	214.188
4267 (168")	2		1			6050	238.188
4877 (192")	2	1				6660	262.188
5486 (216")	3					7269	286.188
6096 (240")	3			1		7828	308.188
6706 (264")	3		1			8438	332.188
7010 (276")	3		1		1	8692	342.188

*EXAMPLE TABLE WITH 3' PIT, DIMENSIONS VARY WITH TRAVEL

Figure 18: Elevation and plan view, enclosure application (Type 1L)

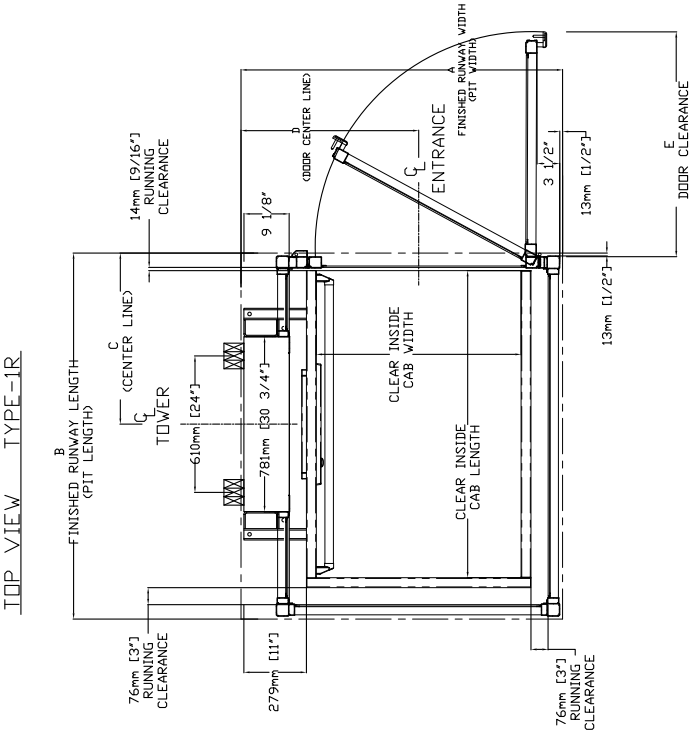

TABLE 2 - ENCLOSURE DIMENSION

CLEAR INSIDE CAB WIDTH		CLEAR INSIDE CAB LENGTH		A FINISHED RUNWAY WIDTH		B FINISHED RUNWAY LENGTH		C TOWER CENTER LINE		D DOOR CENTER LINE (IN CASE OF 36" DOOR)		E DOOR CLEARANCE	
mm	Inches	mm	Inches	mm	Inches	mm	Inches	mm	Inches	mm	Inches	mm	Inches
914	36	1219	48	1437	56 9/16	1483	58 3/8	687	27 1/16	794	31 1/4	1100	43 5/16
914	36	1372	54	1437	56 9/16	1635	64 3/8	764	30 1/16	794	31 1/4	1100	43 5/16
914	36	1524	60	1437	56 9/16	1788	70 3/8	840	33 1/16	794	31 1/4	1100	43 5/16
1067	42	1219	48	1589	62 9/16	1483	58 3/8	687	27 1/16	870	34 1/4	1253	49 5/16
1067	42	1372	54	1589	62 9/16	1635	64 3/8	764	30 1/16	870	34 1/4	1253	49 5/16
1067	42	1524	60	1589	62 9/16	1788	70 3/8	840	33 1/16	870	34 1/4	1253	49 5/16

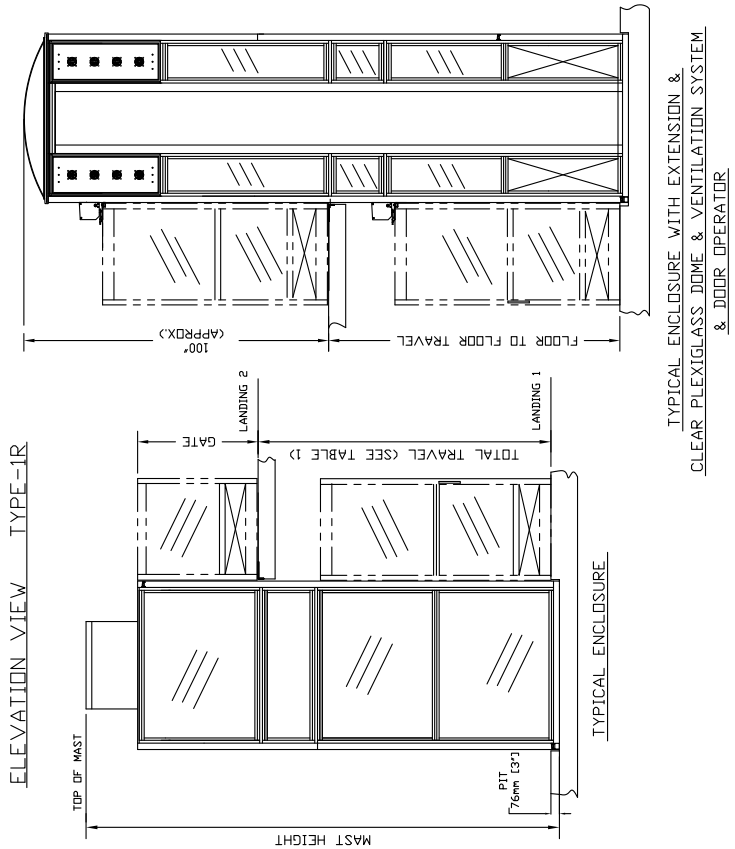

TABLE 1- MAST HEIGHT*

Max. Travel mm (Inches)	Extension Height mm (Inches)					Mast Height Approx with Gate with 4.188" CAP	
	2388 (94")	1778 (70")	1168 (46")	559 (22")	254 (10")	mm	Inches
1219 (48")	1				1	2748	108.188
1524 (60")	1			1		3053	120.188
1829 (72")	1		1			3662	144.188
2438 (96")	1	1				4272	168.188
2743 (108")	1	1				4272	168.188
3048 (120")	2					4882	192.188
3658 (144")	2			1		5440	214.188
4267 (168")	2		1			6050	238.188
4877 (192")	2	1				6660	262.188
5486 (216")	3					7269	286.188
6096 (240")	3			1		7828	308.188
6706 (264")	3		1			8438	332.188
7010 (276")	3		1		1	8692	342.188

*EXAMPLE TABLE WITH 3" PIT, DIMENSIONS VARY WITH TRAVEL

Figure 19: Elevation and plan view, enclosure application (Type 1R)

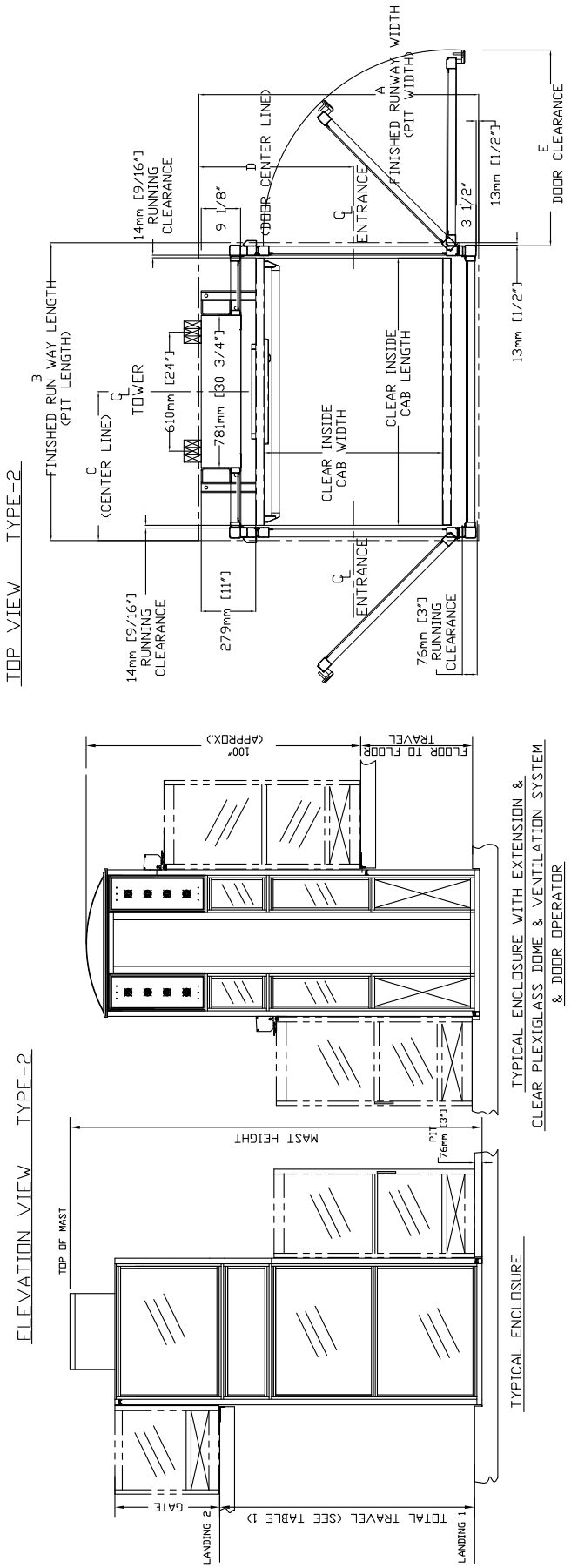

TABLE 2 - ENCLOSURE DIMENSION

CLEAR INSIDE CAB WIDTH		CLEAR INSIDE CAB LENGTH		A FINISHED RUNWAY WIDTH		B FINISHED RUNWAY LENGTH		C TOWER CENTER LINE		D DOOR CENTER LINE (IN CASE OF 36" DOOR)		E DOOR CLEARANCE	
mm	Inches	mm	Inches	mm	Inches	mm	Inches	mm	Inches	mm	Inches	mm	Inches
914	36	1219	48	1437	56 9/16	1376	54 3/16	687	27 1/16	794	31 1/4	1100	43 5/16
914	36	1372	54	1437	56 9/16	1529	60 3/16	764	30 1/16	794	31 1/4	1100	43 5/16
914	36	1524	60	1437	56 9/16	1681	66 3/16	840	33 1/16	794	31 1/4	1100	43 5/16
1067	42	1219	48	1589	62 9/16	1376	54 3/16	687	27 1/16	870	34 1/4	1253	49 5/16
1067	42	1372	54	1589	62 9/16	1529	60 3/16	764	30 1/16	870	34 1/4	1253	49 5/16
1067	42	1524	60	1589	62 9/16	1681	66 3/16	840	33 1/16	870	34 1/4	1253	49 5/16

TABLE 1- MAST HEIGHT*

Max. Travel mm (Inches)	Extension Height mm (Inches)					Mast Height Approx with Gate with 4.188" CAP	
	2388 (94")	1778 (70")	1168 (46")	559 (22")	254 (10")	mm	Inches
1219 (48")	1				1	2748	108.188
1524 (60")	1			1		3053	120.188
1829 (72")	1		1			3662	144.188
2438 (96")	1	1				4272	168.188
2743 (108")	1	1				4272	168.188
3048 (120")	2					4882	192.188
3658 (144")	2			1		5440	214.188
4267 (168")	2		1			6050	238.188
4877 (192")	2	1				6660	262.188
5486 (216")	3					7269	286.188
6096 (240")	3			1		7828	308.188
6706 (264")	3		1			8438	332.188
7010 (276")	3		1		1	8692	342.188

*EXAMPLE TABLE WITH 3" PIT, DIMENSIONS VARY WITH TRAVEL

Figure 20: Elevation and plan view, enclosure application (Type 2)

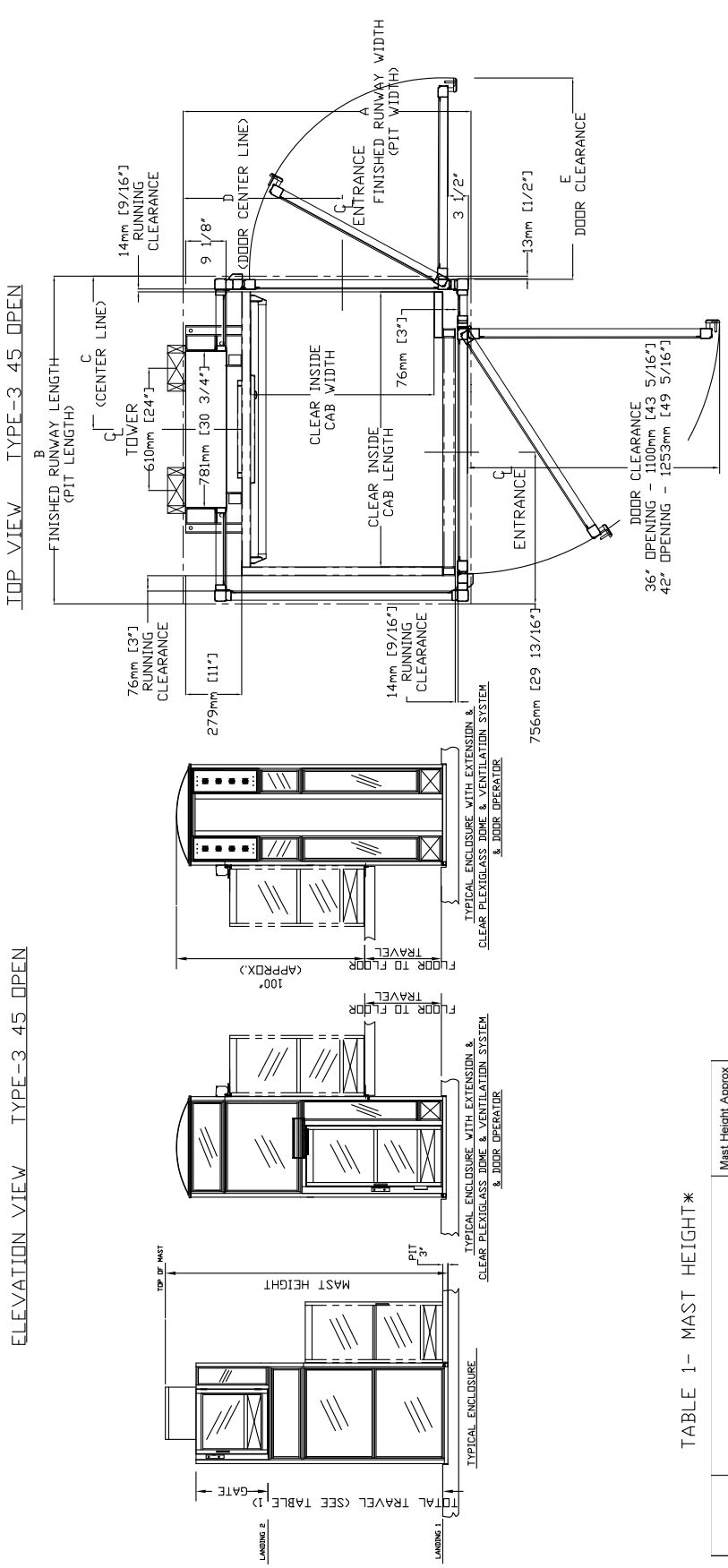

TABLE 2 - ENCLOSURE DIMENSION

CLEAR INSIDE CAB WIDTH		CLEAR INSIDE CAB LENGTH		A FINISHED RUNWAY WIDTH		B FINISHED RUNWAY LENGTH		C TOWER CENTER LINE		D DOOR CENTER LINE (IN CASE OF 36" DOOR)		E DOOR CLEARANCE	
mm	Inches	mm	Inches	mm	Inches	mm	Inches	mm	Inches	mm	Inches	mm	Inches
914	36	1219	48	1437	56 9/16	1483	58 3/8	687	27 1/16	794	31 1/4	1100	43 5/16
914	36	1372	54	1437	56 9/16	1635	64 3/8	764	30 1/16	794	31 1/4	1100	43 5/16
914	36	1524	60	1437	56 9/16	1788	70 3/8	840	33 1/16	794	31 1/4	1100	43 5/16
1067	42	1219	48	1589	62 9/16	1483	58 3/8	687	27 1/16	870	34 1/4	1253	49 5/16
1067	42	1372	54	1589	62 9/16	1635	64 3/8	764	30 1/16	870	34 1/4	1253	49 5/16
1067	42	1524	60	1589	62 9/16	1788	70 3/8	840	33 1/16	870	34 1/4	1253	49 5/16

TABLE 1- MAST HEIGHT*

Max. Travel mm (Inches)	Extension Height mm (Inches)					Mast Height Approx with Gate with 4.188" CAP	
	2388 (94")	1778 (70")	1168 (46")	559 (22")	254 (10")	mm	Inches
1219 (48")	1				1	2748	108.188
1524 (60")	1			1		3053	120.188
1829 (72")	1		1			3662	144.188
2438 (96")	1	1				4272	168.188
2743 (108")	1	1				4272	168.188
3048 (120")	2					4882	192.188
3658 (144")	2			1		5440	214.188
4267 (168")	2		1			6050	238.188
4877 (192")	2	1				6660	262.188
5486 (216")	3					7269	286.188
3096 (240")	3			1		7828	308.188
6706 (264")	3		1			8438	332.188
7010 (276")	3		1		1	8692	342.188

*EXAMPLE TABLE WITH 3" PIT, DIMENSIONS VARY WITH TRAVEL

Figure 21: Elevation and plan view, enclosure application (Type 3, 45'' opening)

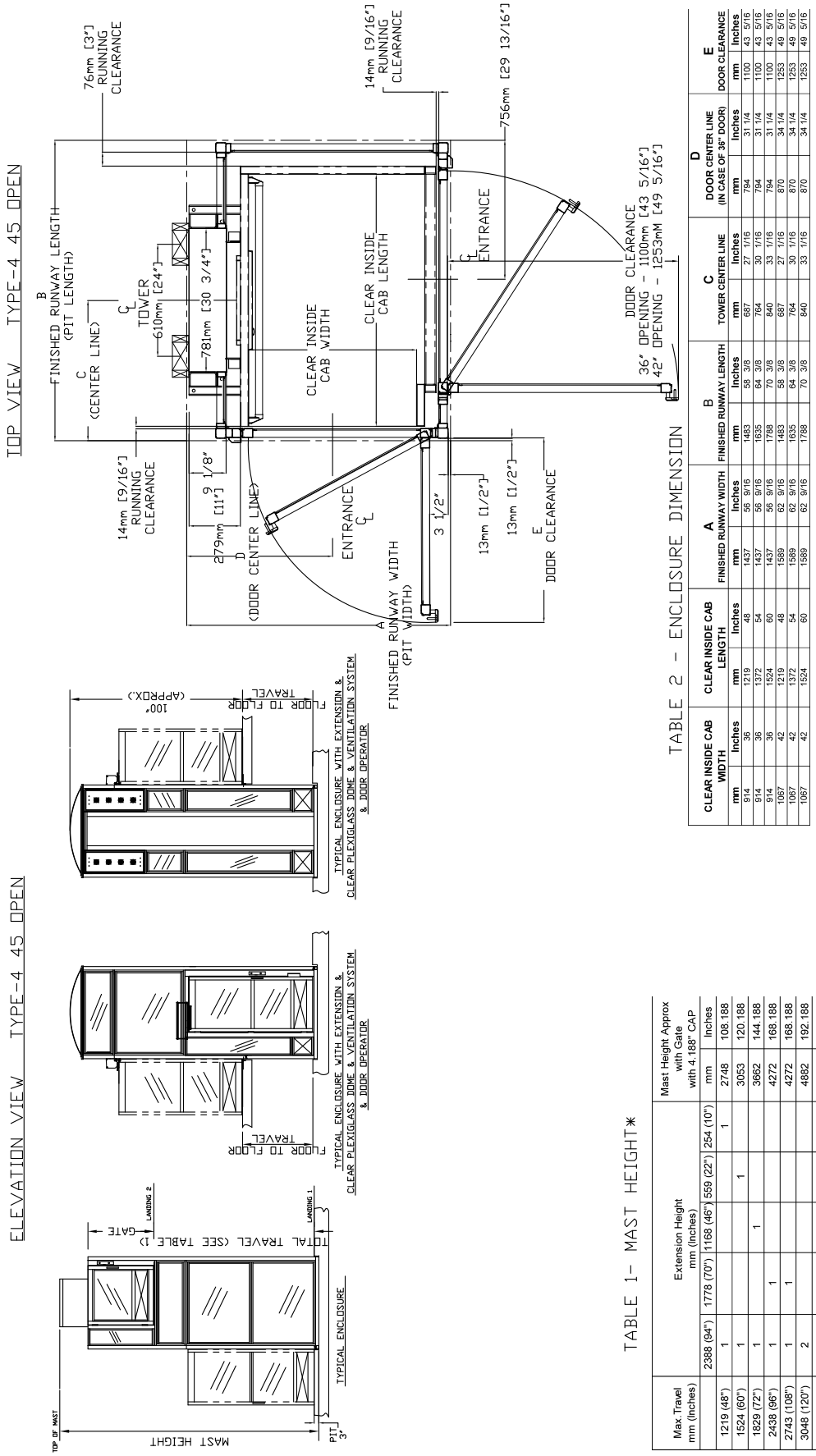

TABLE 2 - ENCLOSURE DIMENSION

CLEAR INSIDE CAB WIDTH		CLEAR INSIDE CAB LENGTH		A FINISHED RUNWAY WIDTH		B FINISHED RUNWAY LENGTH		C TOWER CENTER LINE		D DOOR CENTER LINE (IN CASE OF 36" DOOR)		E DOOR CLEARANCE	
mm	Inches	mm	Inches	mm	Inches	mm	Inches	mm	Inches	mm	Inches	mm	Inches
914	36	1219	48	1437	56 9/16	1483	58 3/8	687	27 1/16	794	31 1/4	1100	43 5/16
914	36	1372	54	1437	56 9/16	1635	64 3/8	764	30 1/16	794	31 1/4	1100	43 5/16
914	36	1372	54	1437	56 9/16	1635	64 3/8	764	30 1/16	794	31 1/4	1100	43 5/16
914	36	1524	60	1437	56 9/16	1788	70 3/8	840	33 1/16	794	31 1/4	1100	43 5/16
1067	42	1219	48	1589	62 9/16	1483	58 3/8	687	27 1/16	870	34 1/4	1253	49 5/16
1067	42	1372	54	1589	62 9/16	1635	64 3/8	764	30 1/16	870	34 1/4	1253	49 5/16
1067	42	1524	60	1589	62 9/16	1788	70 3/8	840	33 1/16	870	34 1/4	1253	49 5/16

TABLE 1- MAST HEIGHT*

Max. Travel mm (inches)	Extension Height mm (inches)				Mast Height Approx with Gate with 4.188" CAP	
	2388 (94")	1778 (70")	1168 (46")	559 (22")	254 (10")	mm	Inches
1219 (48")	1				1	2748	108.188
1524 (60")	1			1		3053	120.188
1829 (72")	1		1			3662	144.188
2438 (96")	1	1				4272	168.188
2743 (108")	1	1				4272	168.188
3048 (120")	2			1		4882	192.188
3658 (144")	2		1			5440	214.188
4267 (168")	2		1			6050	238.188
4877 (192")	2	1				6660	262.188
5486 (216")	3					7269	286.188
6096 (240")	3			1		7828	308.188
6706 (264")	3		1			8438	332.188
7010 (276")	3				1	8692	342.188

*EXAMPLE TABLE WITH 3" PIT, DIMENSIONS VARY WITH TRAVEL

Figure 22: Elevation and plan view, enclosure application (Type 4, 45" opening)

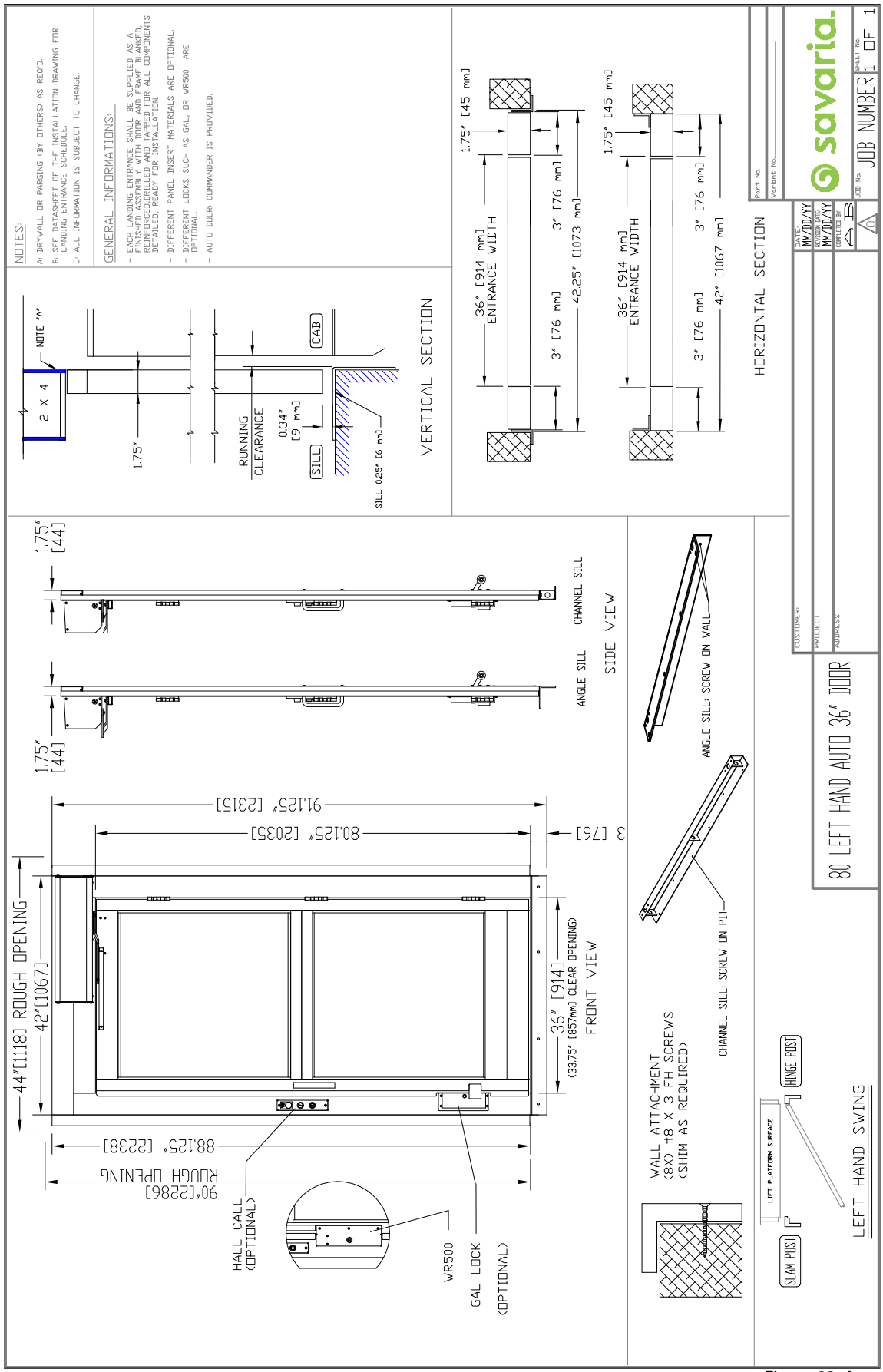

Figure 23: Auto door, left-hand

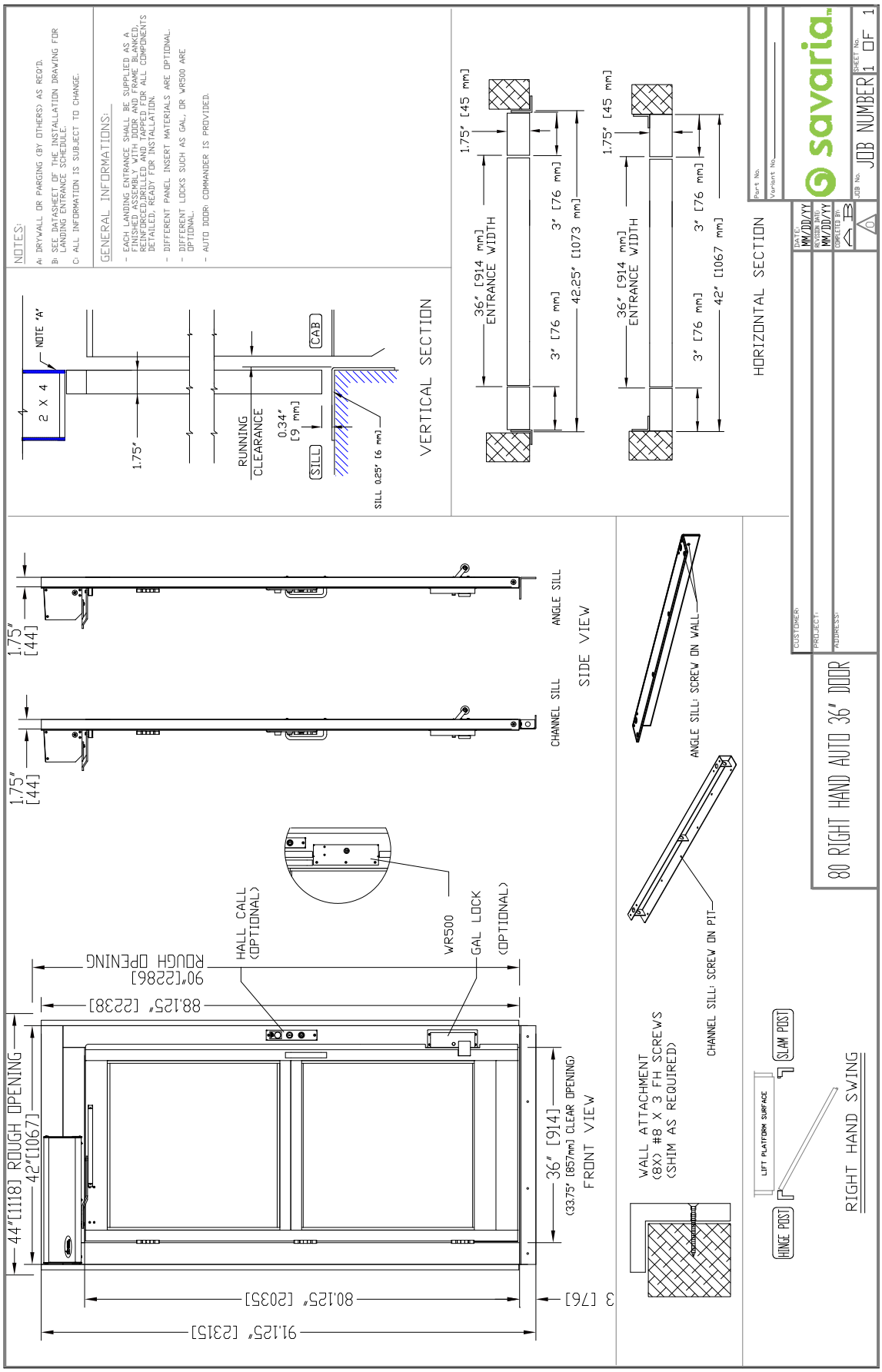

Figure 24: Auto door, right-hand

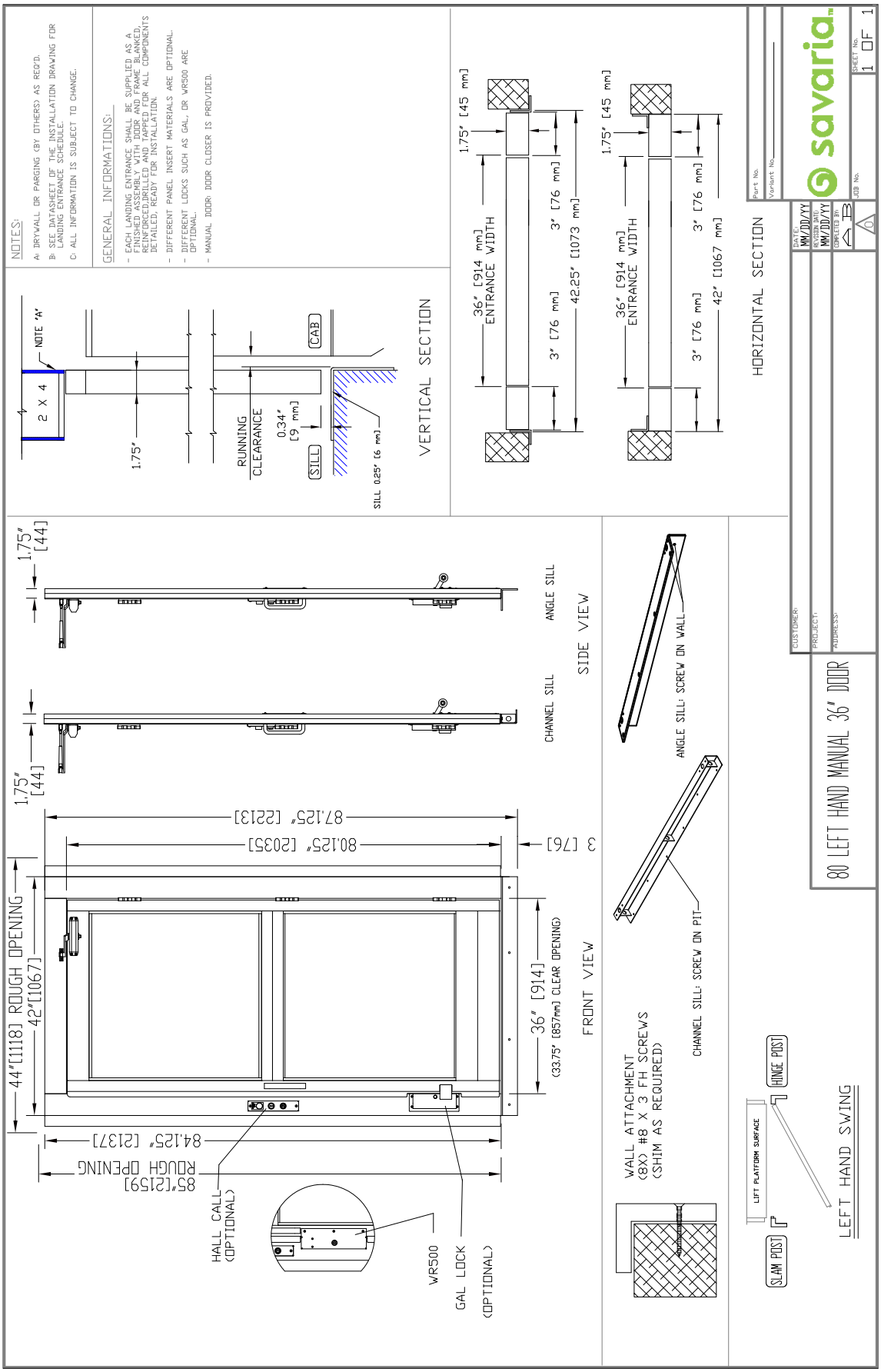

Figure 25: Manual door, left-hand

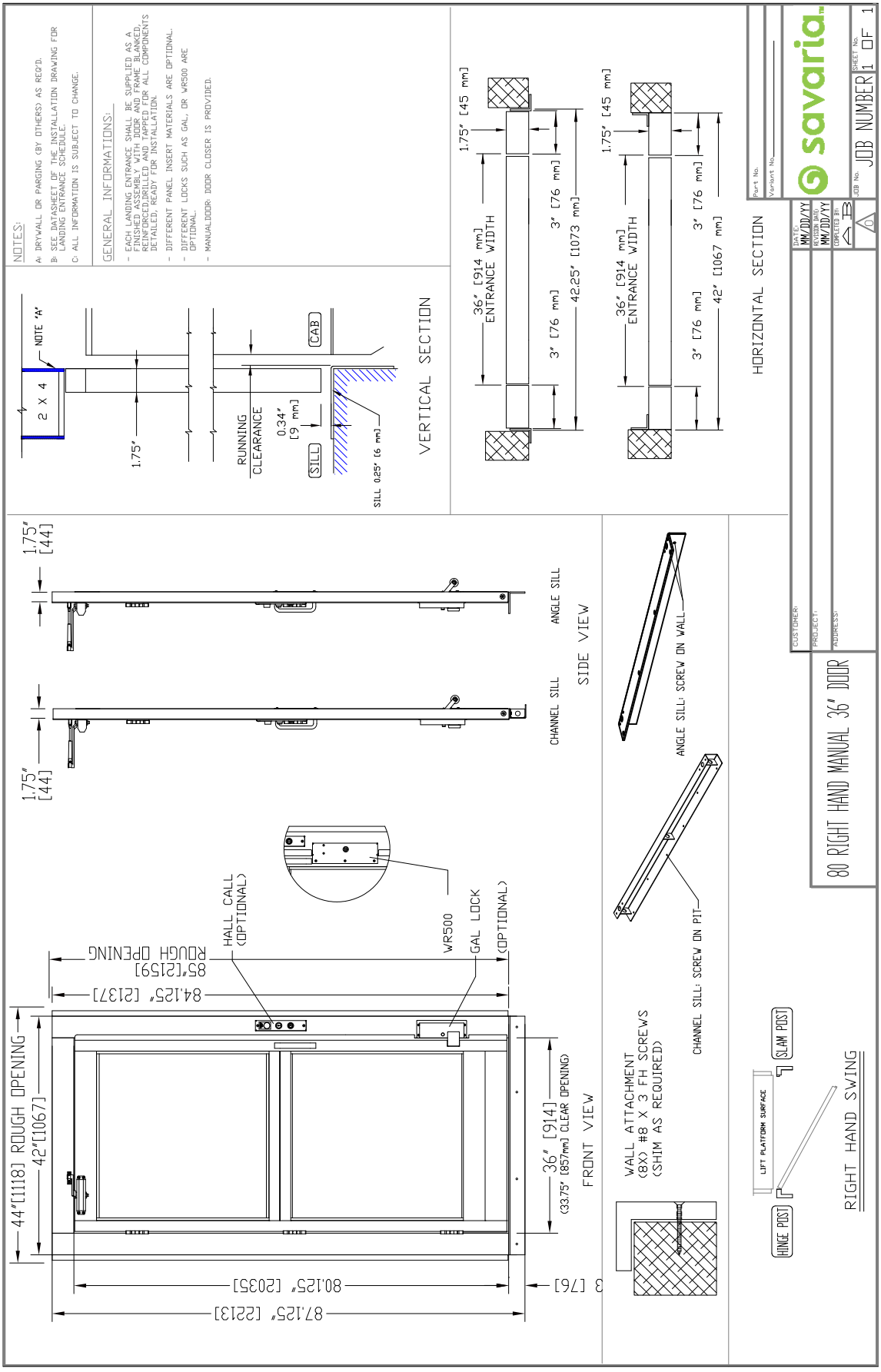

Figure 26: Manual door, right-hand

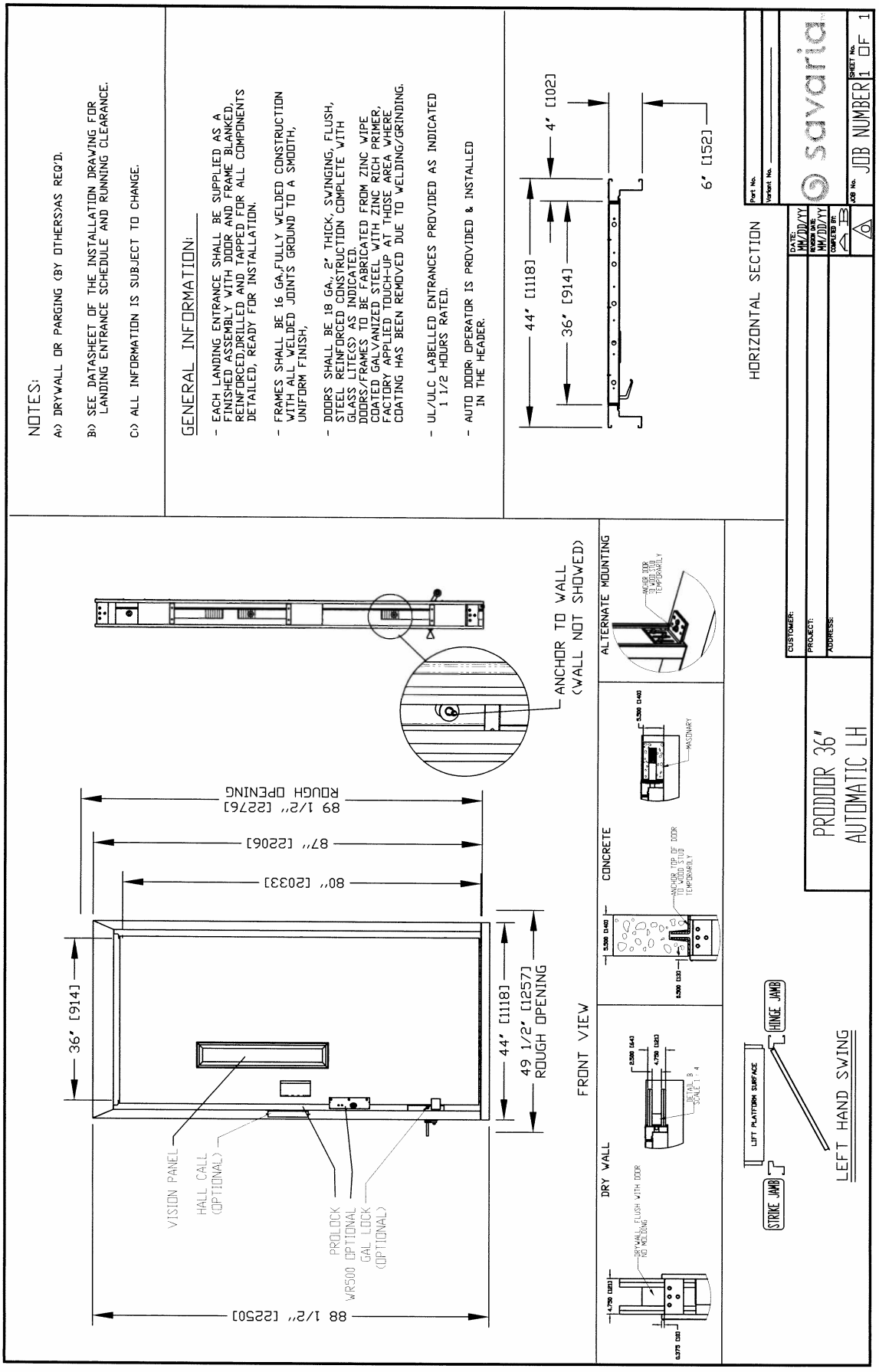

Figure 27: Prodoor auto, left-hand

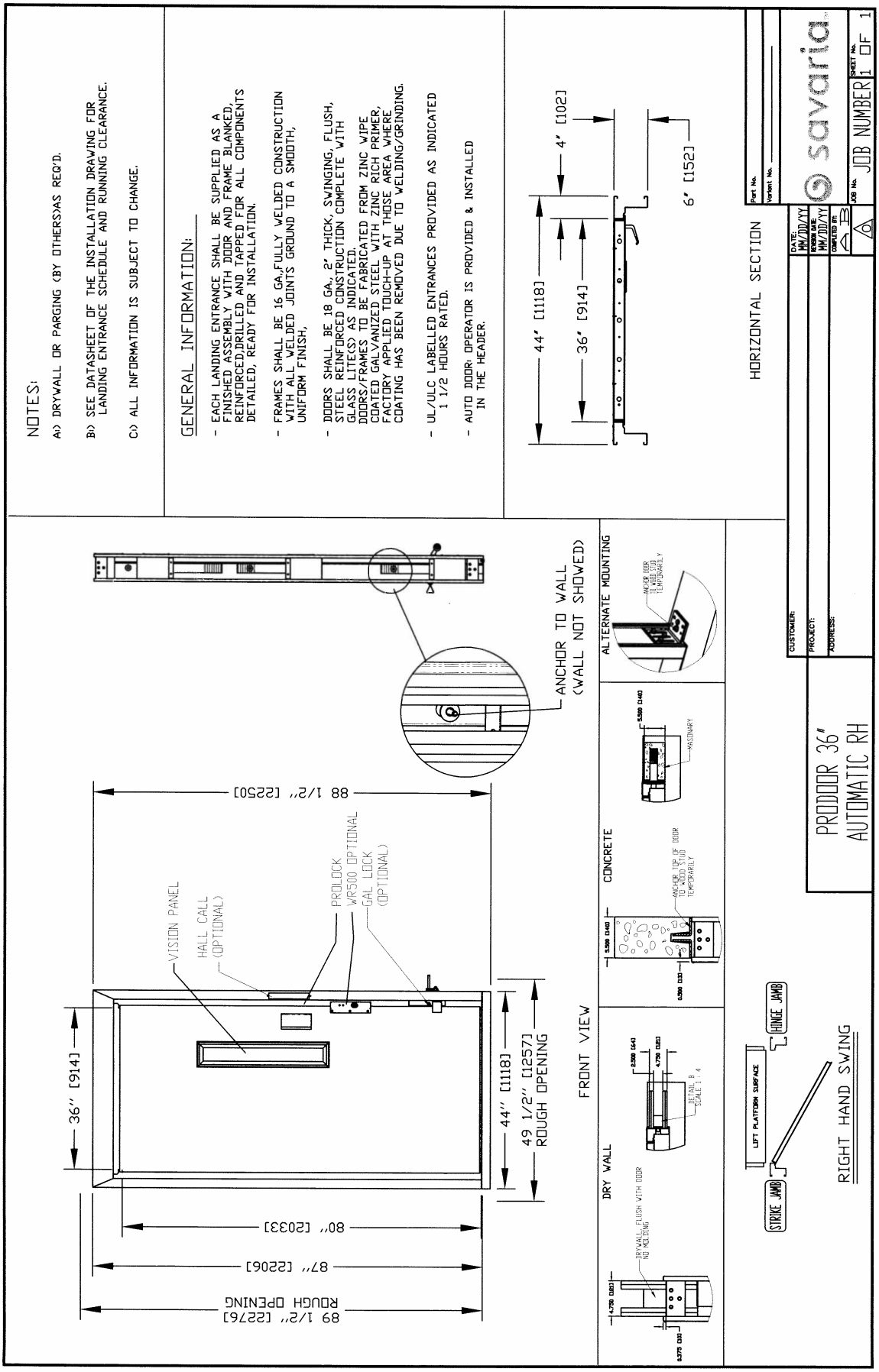

Figure 28: Prodoor auto, right-hand

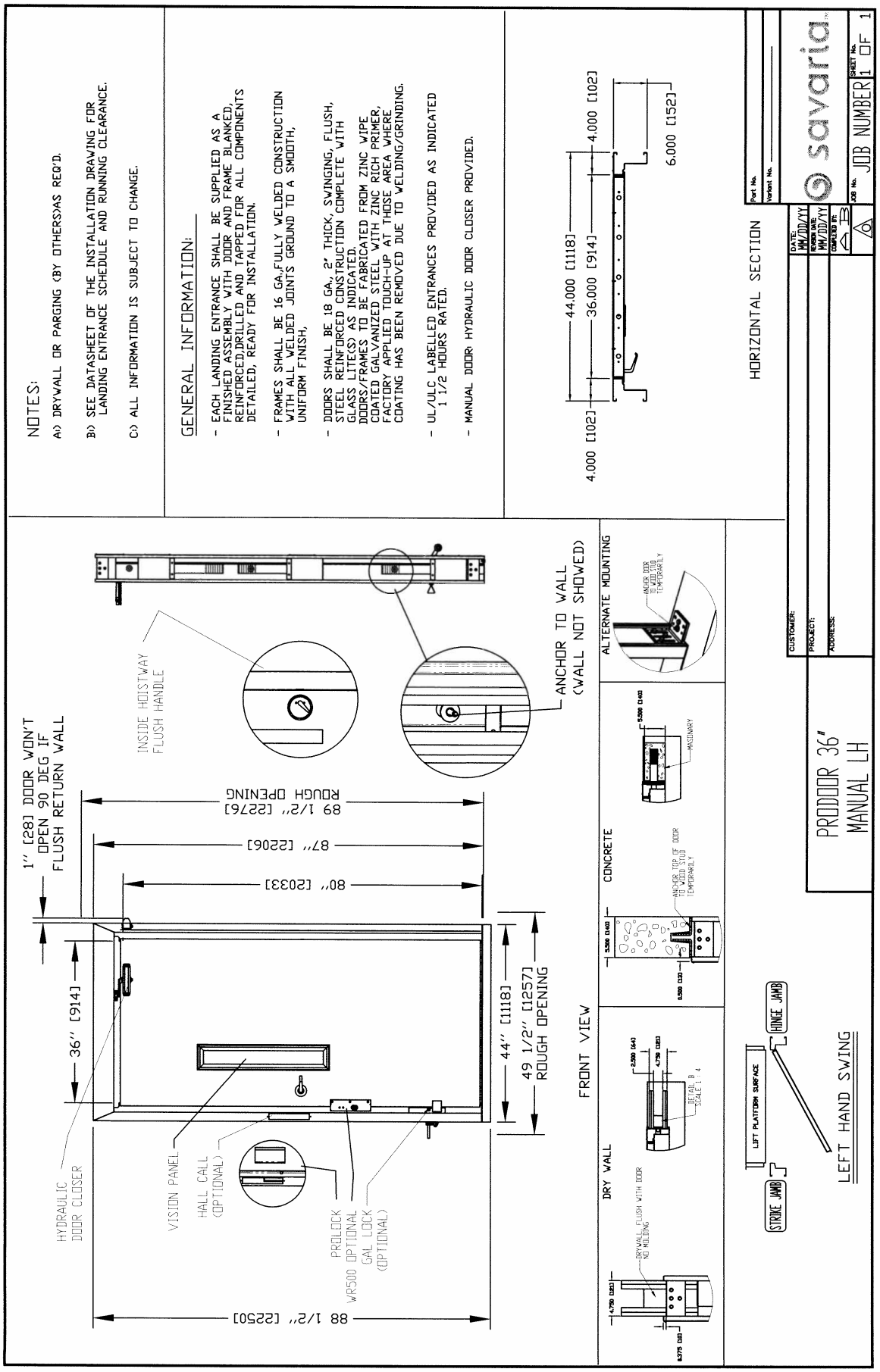

Figure 29: Prodoor manual, left-hand

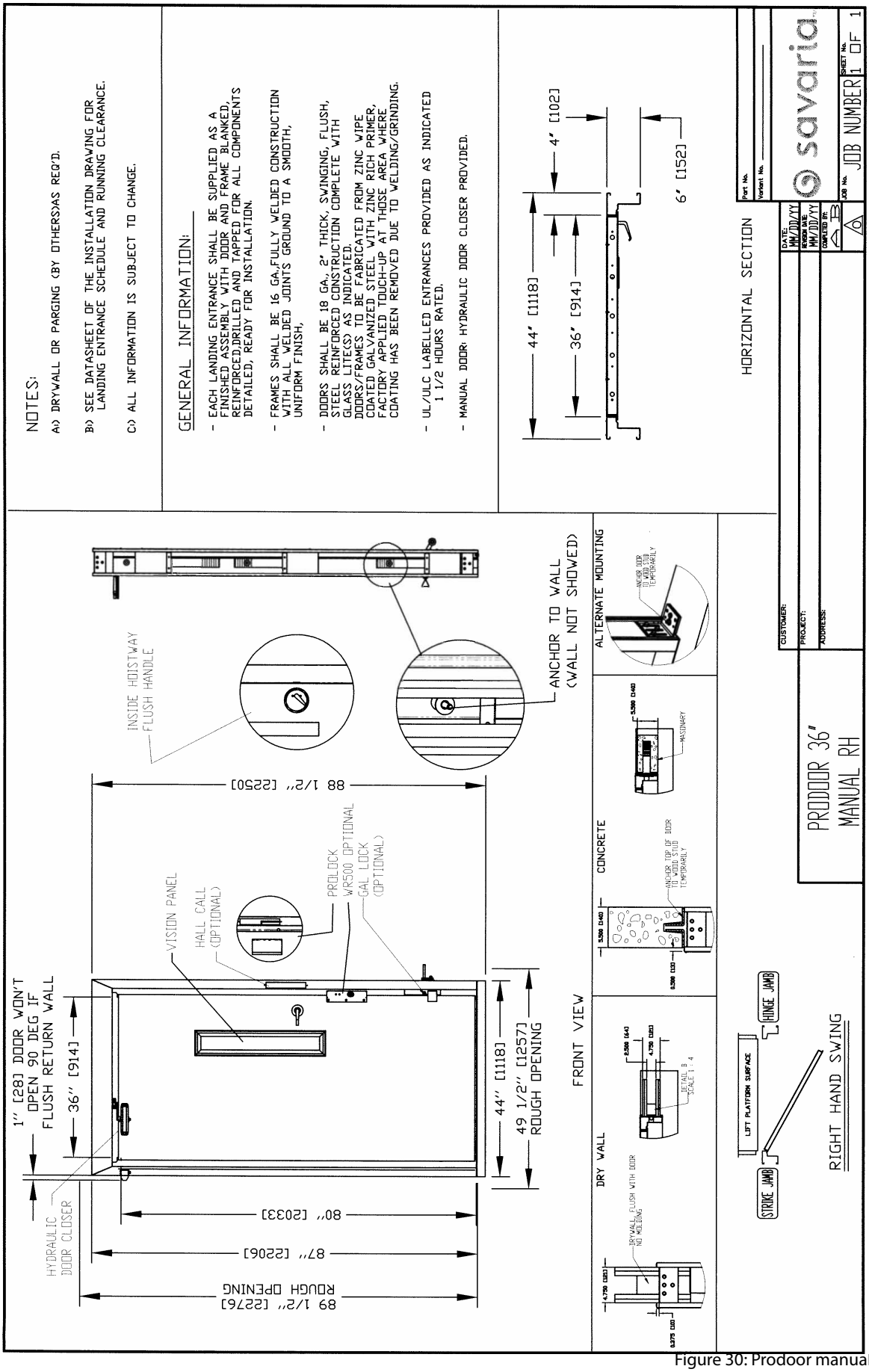

Figure 30: Prodoor manual, right-hand

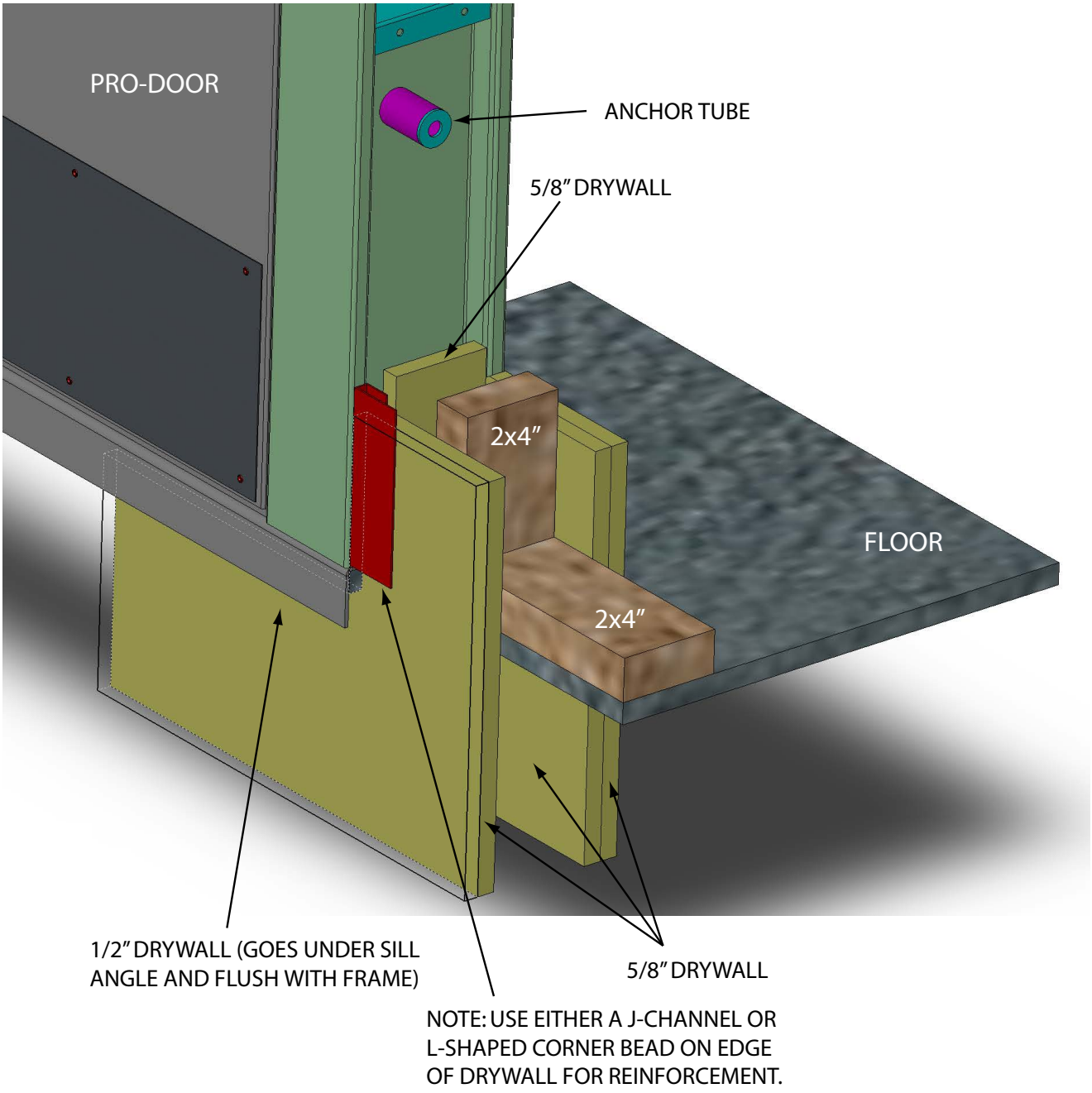

Figure 31: Prodoor installation (drywall)

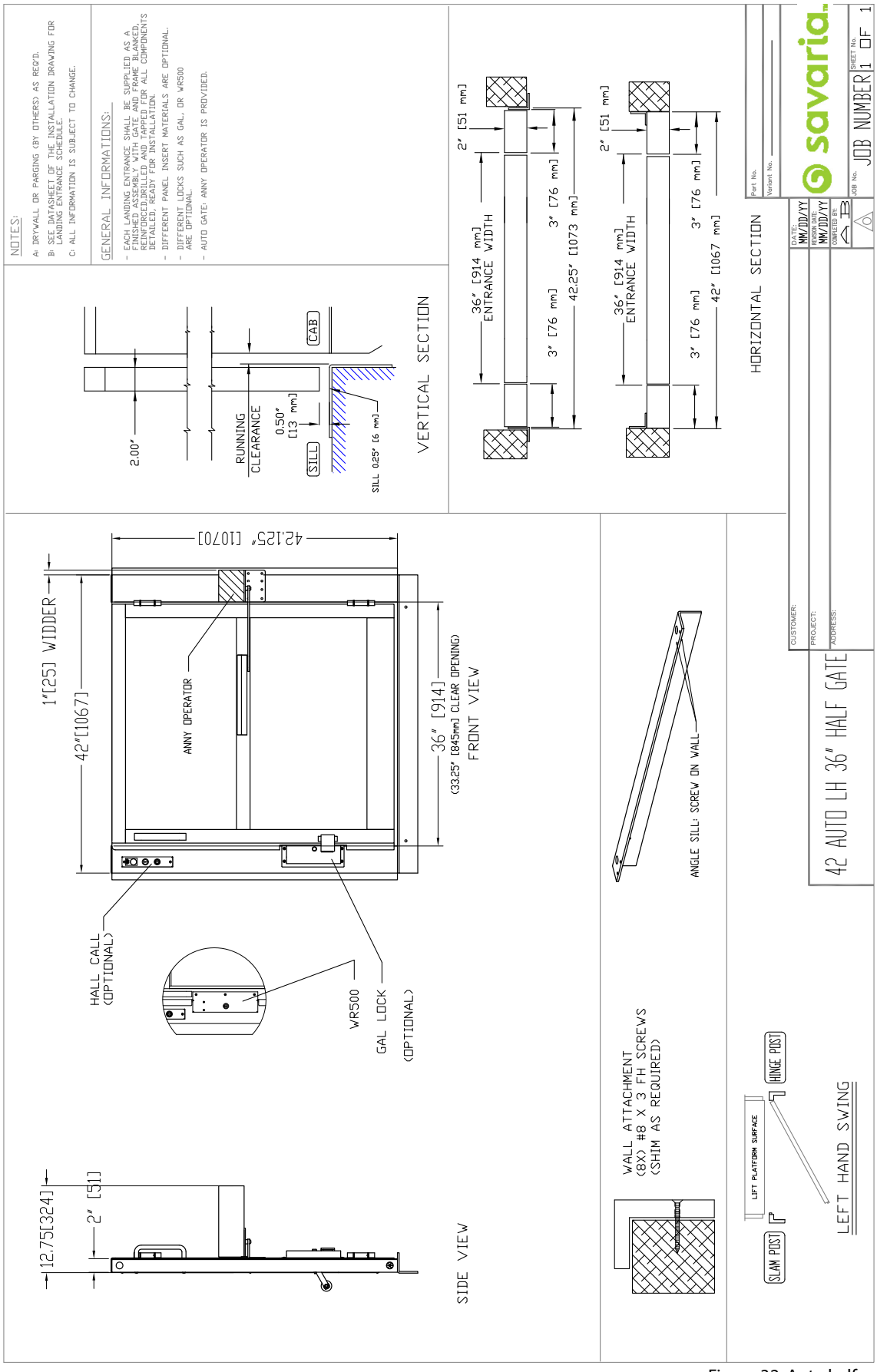

Figure 32: Auto half gate, left-hand

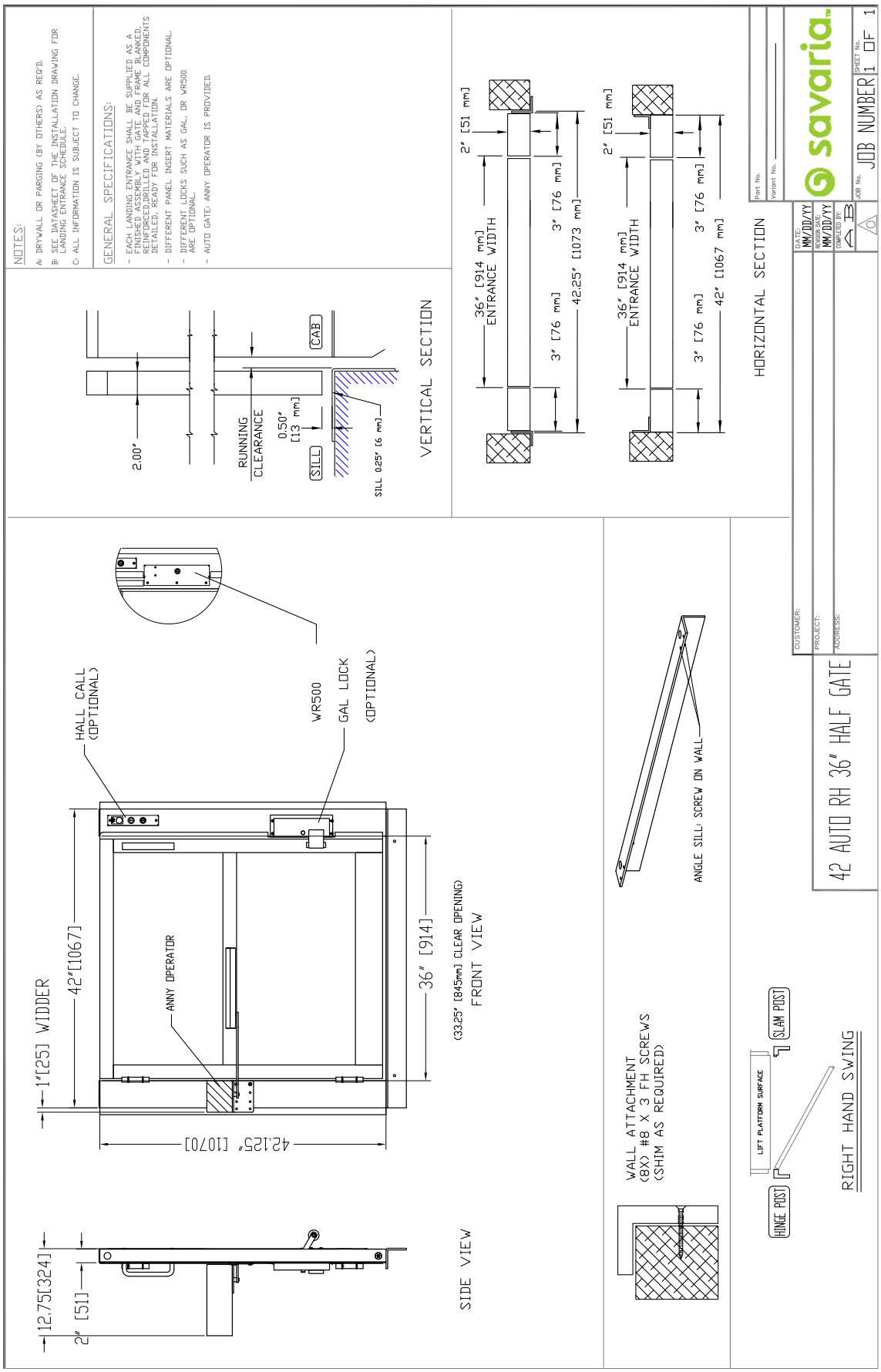

Figure 33: Auto half gate, right-hand

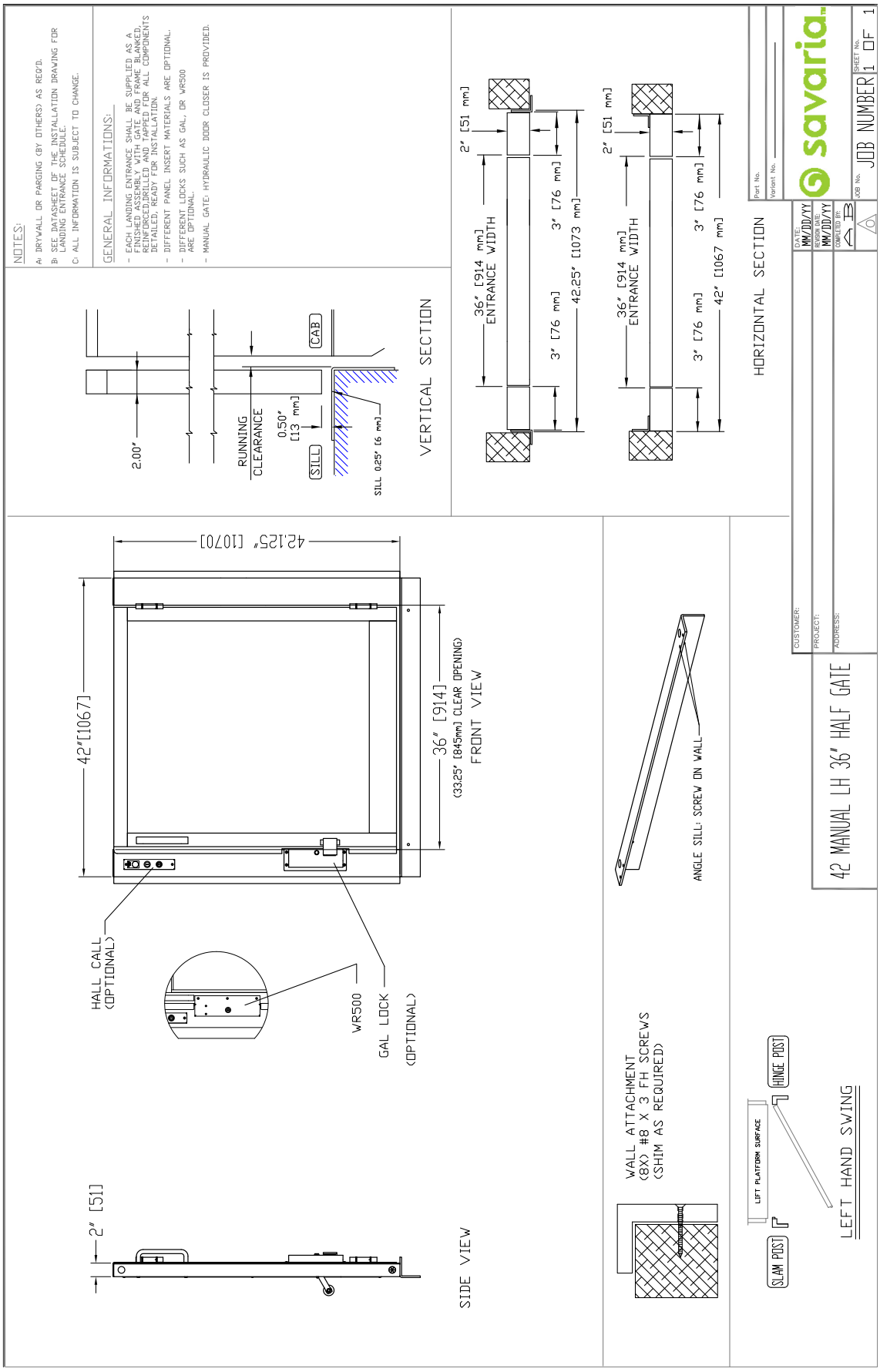

Figure 34: Manual half gate, left-hand

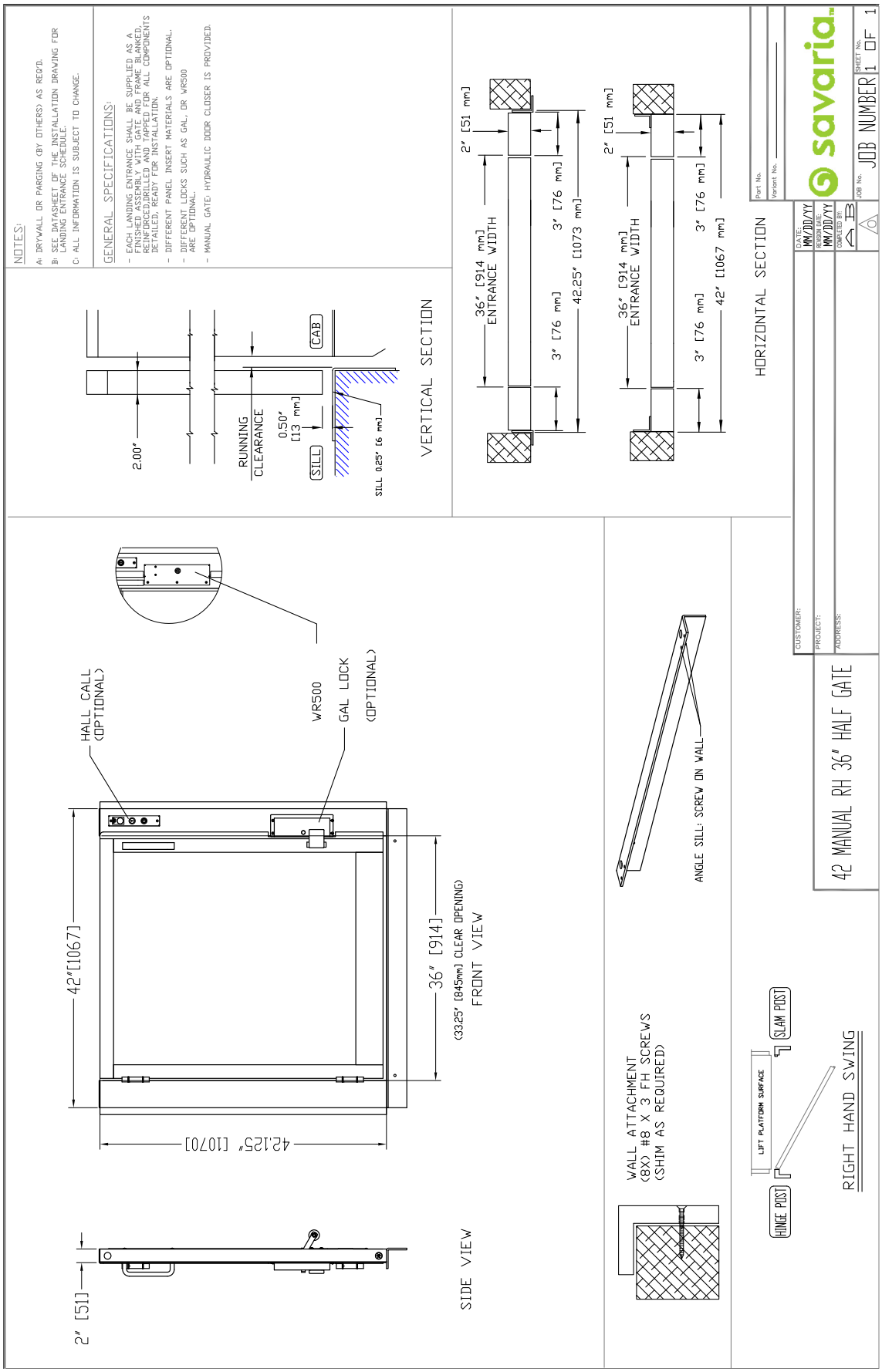

Figure 35: Manual half gate, right-hand

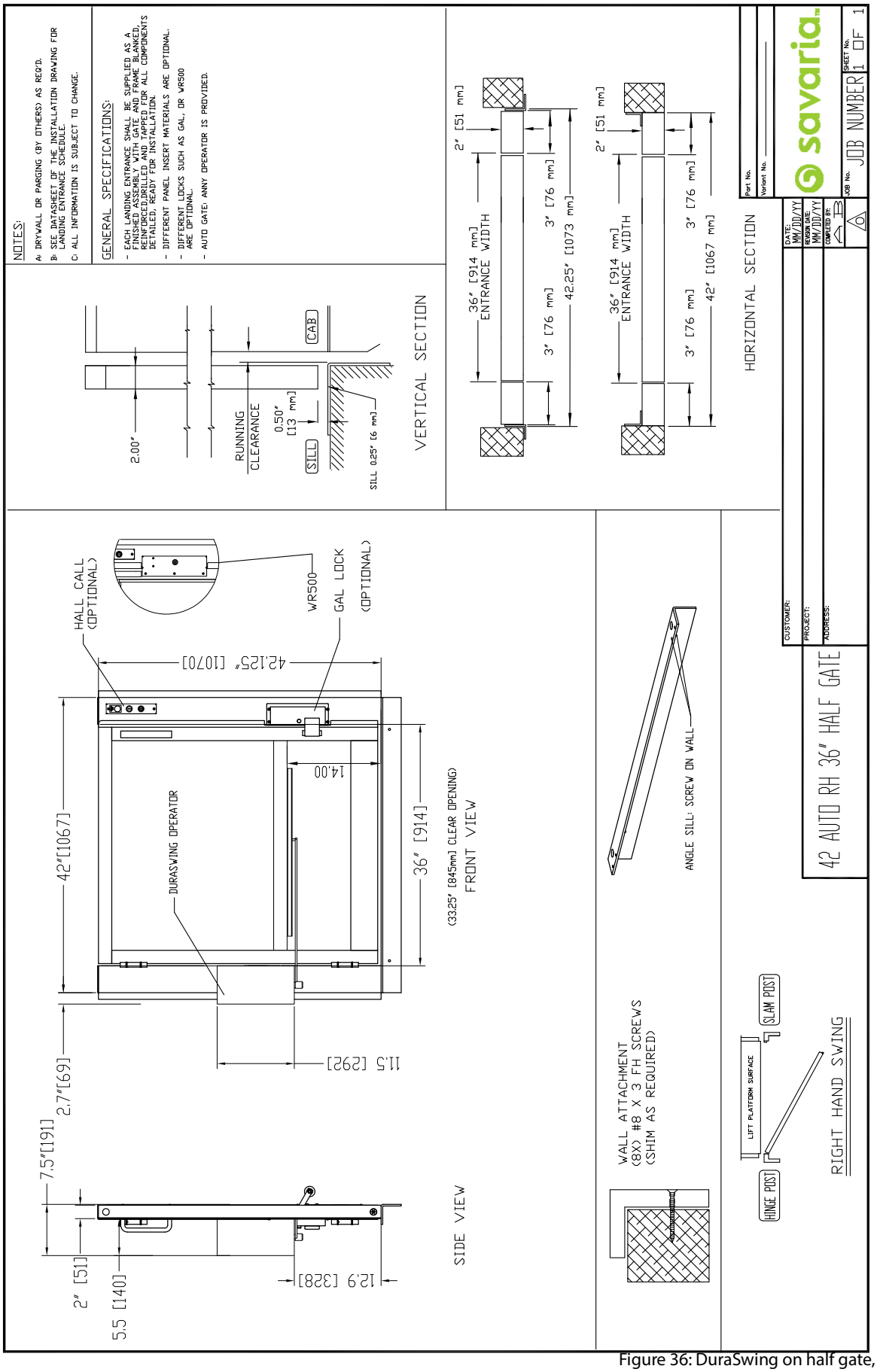

Figure 36: DuraSwing on half gate, right-hand

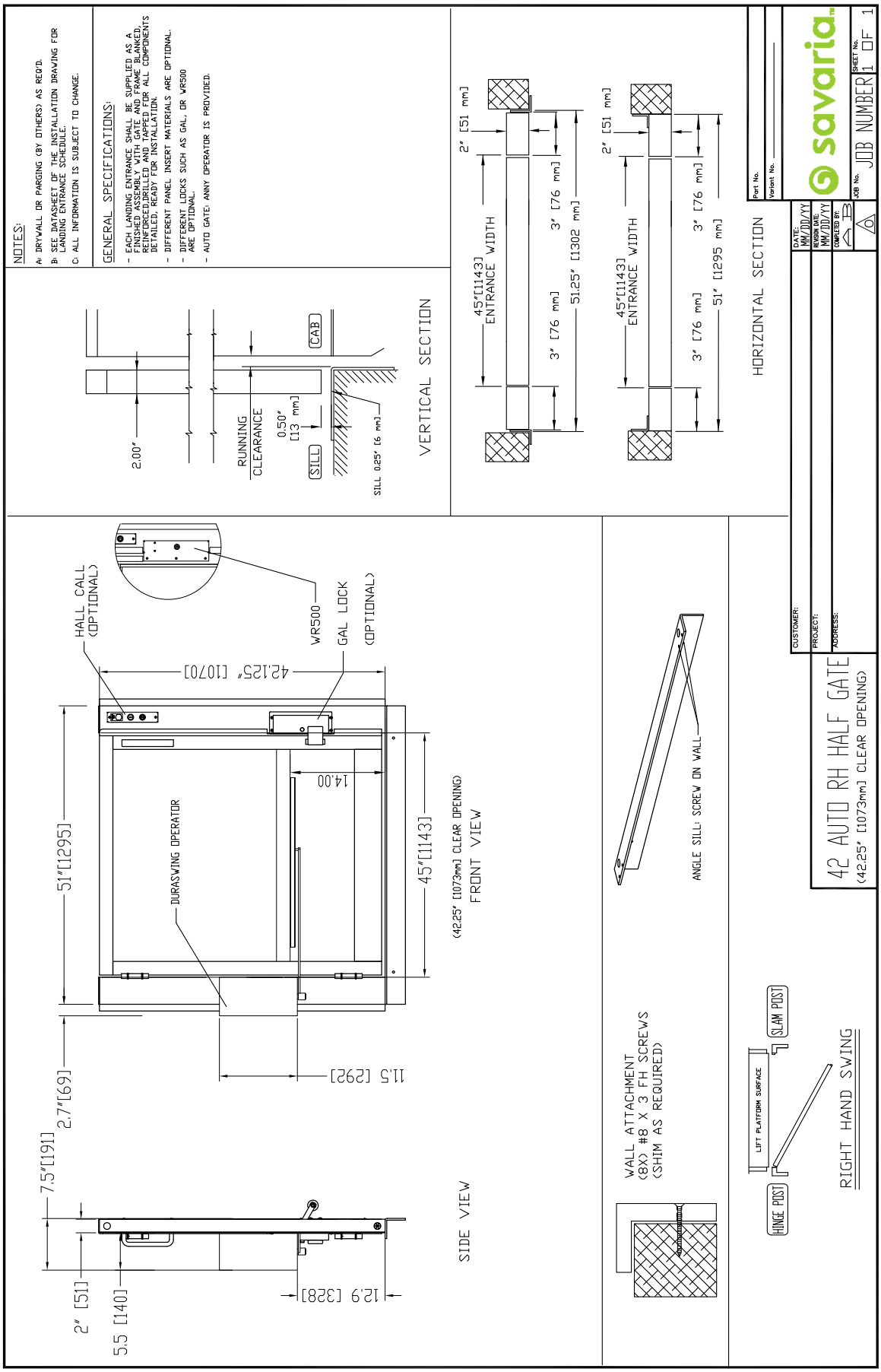

Figure 37: DuraSwing on half gate, right-hand, 45" opening

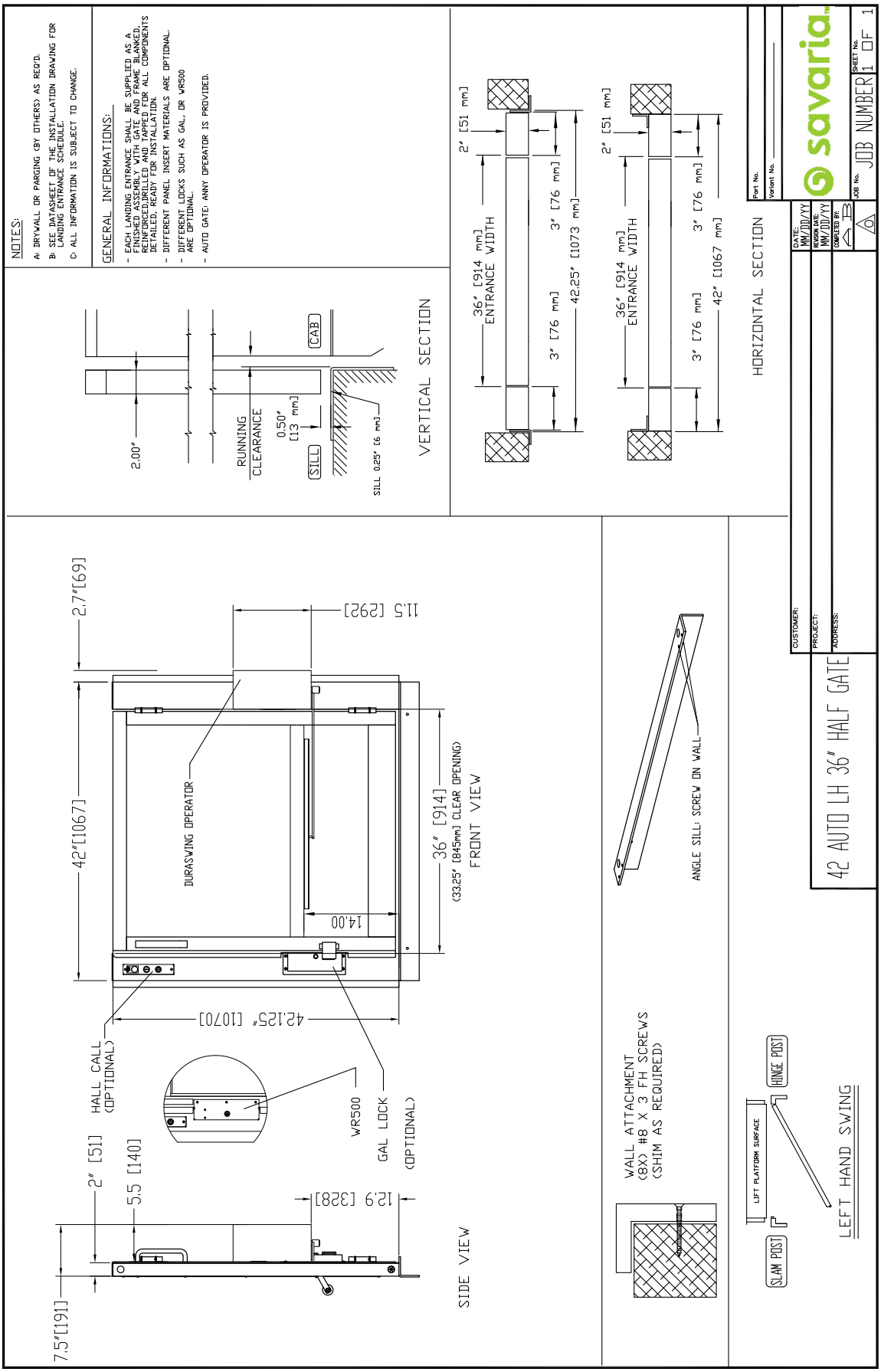

Figure 38: DuraSwing on half gate, left-hand

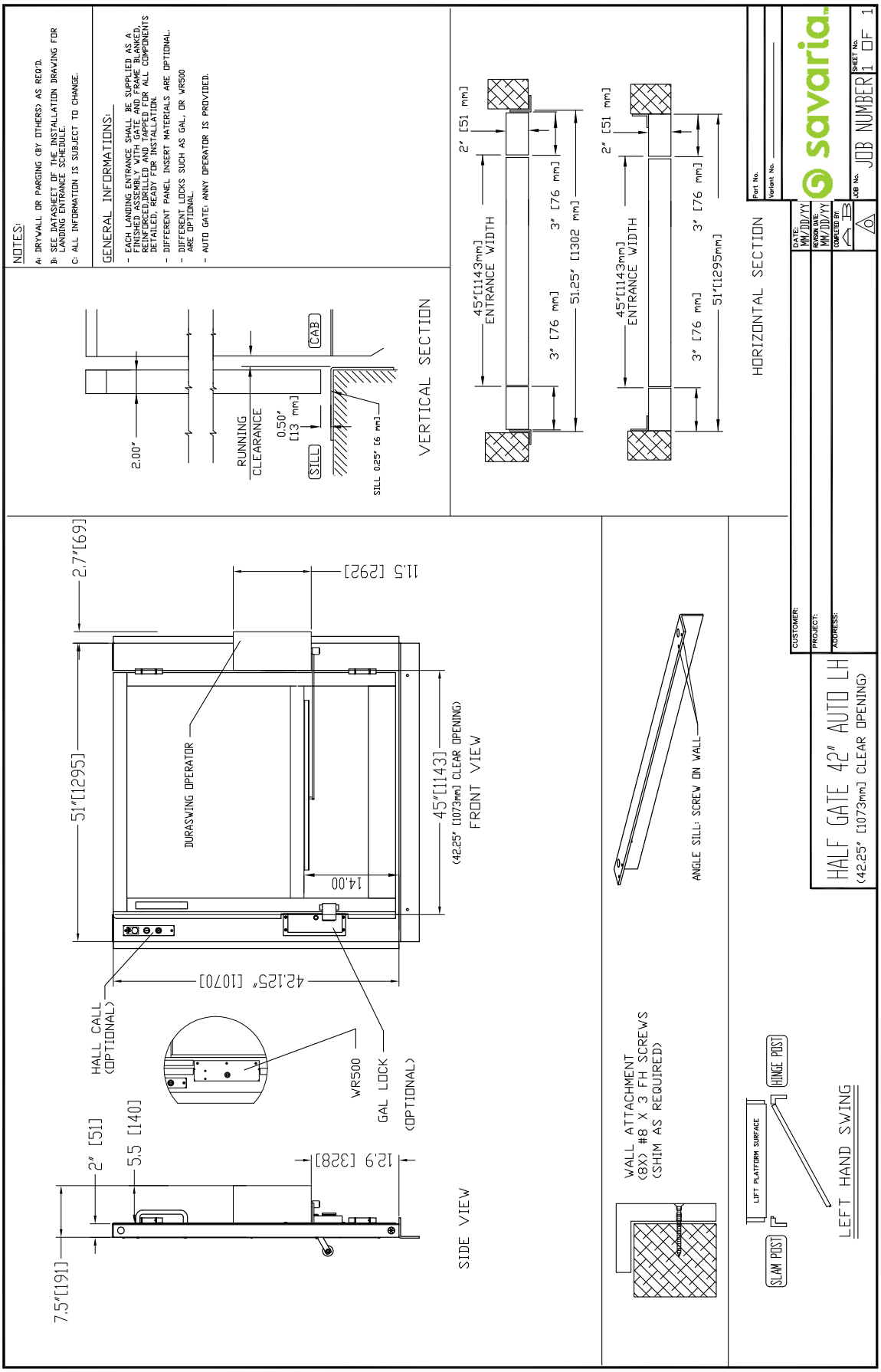

Figure 39: DuraSwing on half gate, left-hand, 45" opening

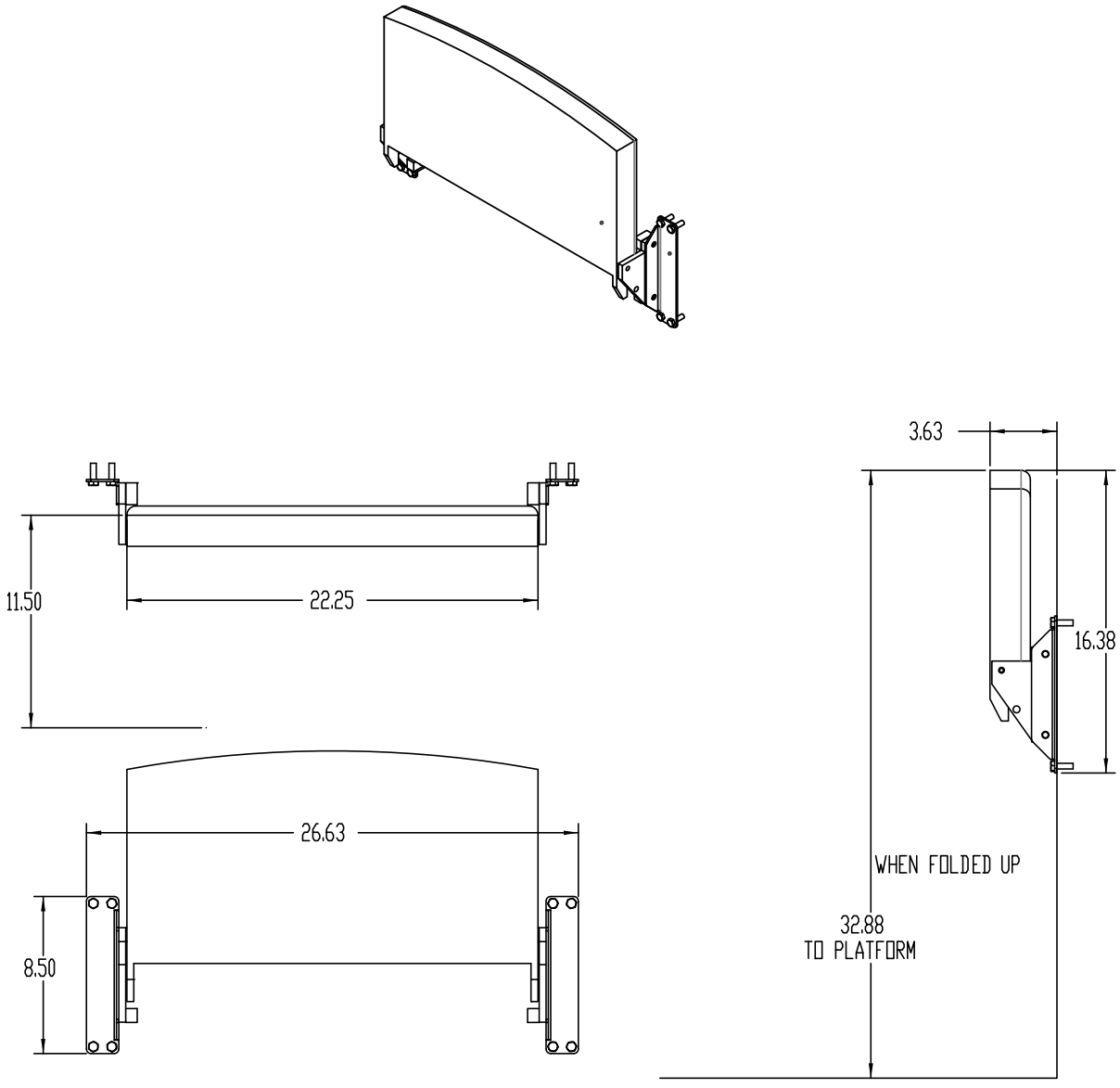

NOTE: Maximum seat capacity is 330 lbs (150 kg)

Figure 40: Seat dimensions

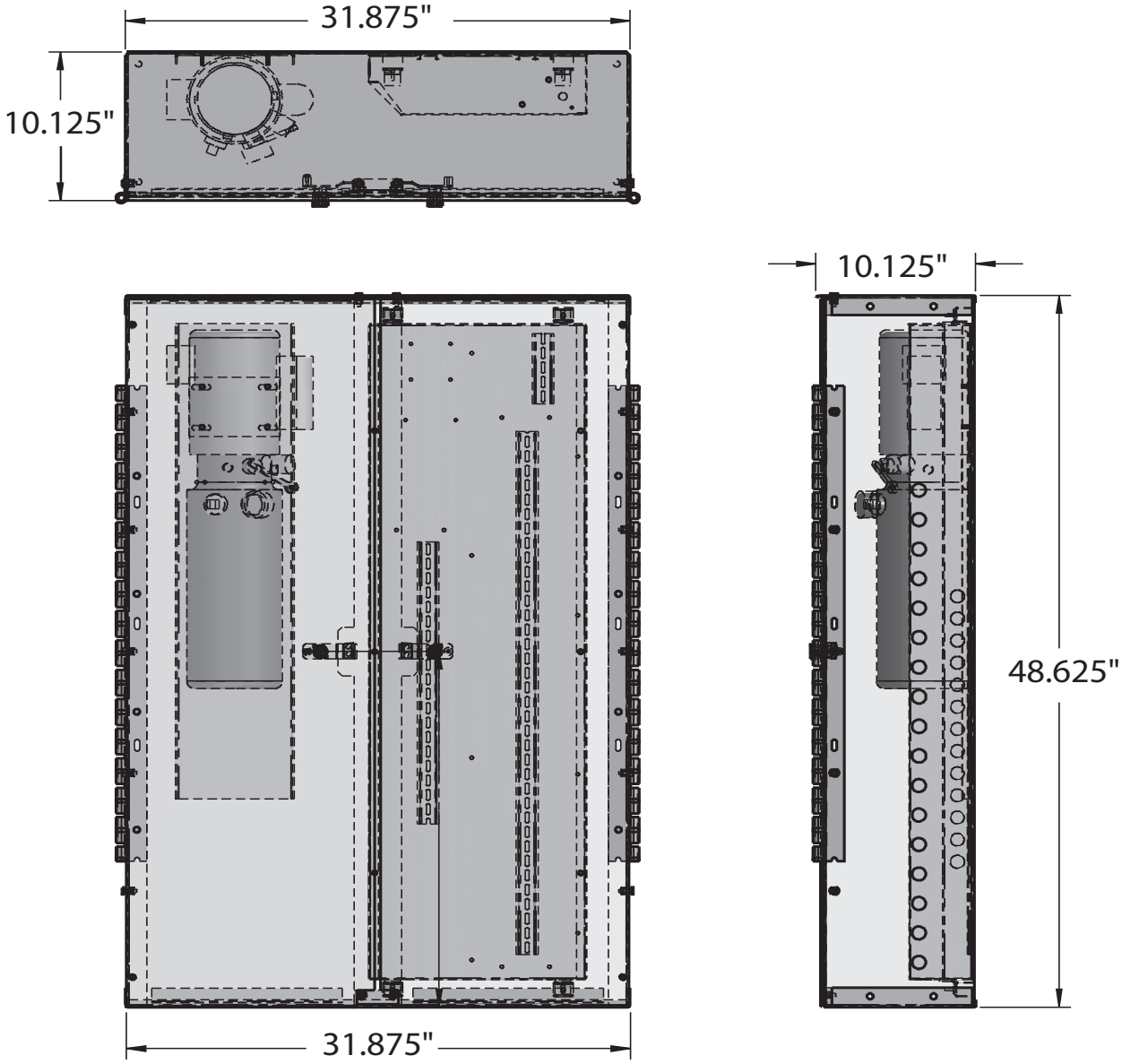

Figure 41: Remote controller/pump box dimensions

V-1504

Vertical Platform Lift
PLANNING GUIDE

Part No. 000690, Rev. 043
10-m07-2026

Copyright © 2025

Savaria Concord Lifts, Inc.
www.savaria.com

Sales
2 Walker Drive
Brampton, Ontario L6T 5E1
Canada
Tel: (905) 791-5555
Fax: (905) 791-2222
Toll Free: 1-800-661-5112

savaria®