

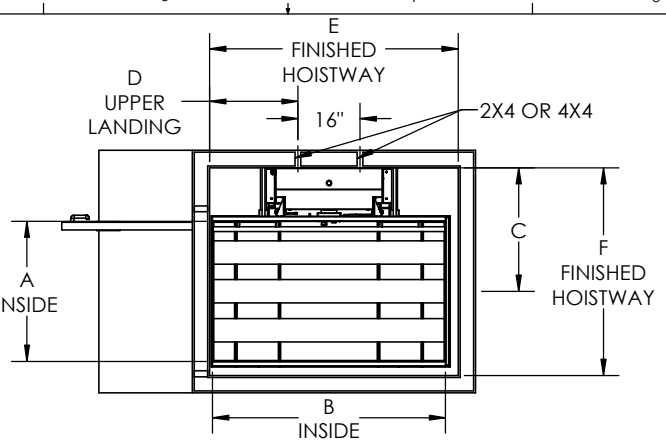

Specifications

Model:	VL19
Rated Load:	750 lbs
Drive:	Dual winding cable drums / 24 VDC 500 watt motor w/brake
Supply Power:	120 VAC 15A
Operating Power:	24 VDC (DUAL 12V 10AH BATTERIES)
Control Power:	5 VDC
Platform:	36" x 48" (36" x 54")(36" x 60") (42" X 54")(42" x 60")
Lift Height:	1" - 144"
Speed:	15-18 fpm
Controls:	Constant pressure
Safety Standards:	ASME A18.1, Section 2 CSA B44.1/ASME A17.5
Safety Features:	Safety pan, final limit, slack cable brake, emergency stop w/alarm

DIMESNIONS AND SPECIFICATIONS SUBJECT TO CHANGE

DESIGNED TO COMPLY WITH ANSI A18.1 PART 2 WHEN PROPERLY INSTALLED

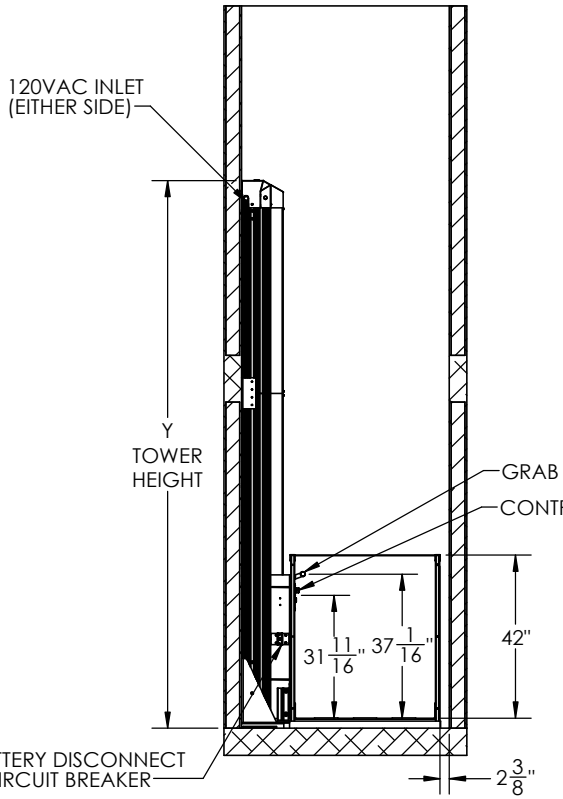

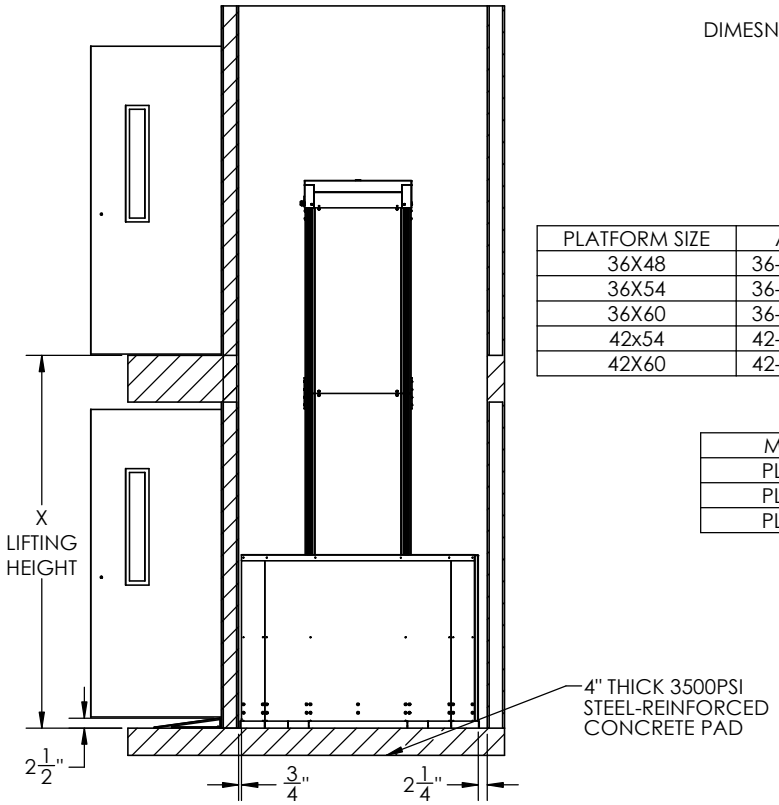

PLATFORM SIZE	A	B	C	D	E	F
36X48	36-1/8	48	31-13/16	16-3/4	52	53-1/2
36X54	36-1/8	54	31-13/16	16-3/4	58	53-1/2
36X60	36-1/8	60	31-13/16	22-3/4	64	53-1/2
42x54	42-1/8	54	34-13/16	16-3/4	58	59-1/2
42X60	42-1/8	60	34-13/16	22-3/4	64	59-1/2

MODEL	X	Y
PLH-096	96	141-1/16
PLH-120	120	165-1/16
PLH-144	144	189-1/16

Staying Home Corporation
2501 Anaconda Rd
Harrisonville, MO 64701
816-380-2427
www.stayinghome.com

TITLE: PLATFORM LIFT - HOISTWAY ENTER/EXIT SAME SIDE

SIZE	DWG. NO.	REV
B	TYP-PLH-EE	11/29 2021

SCALE: | WEIGHT: | SHEET 1 OF 1