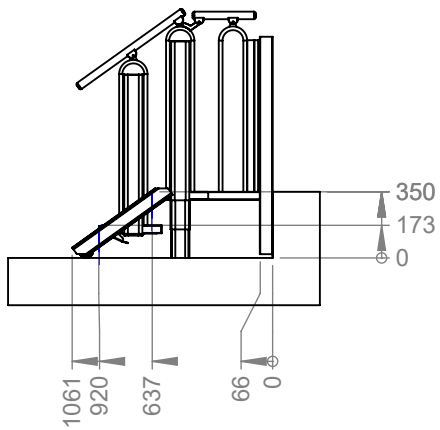

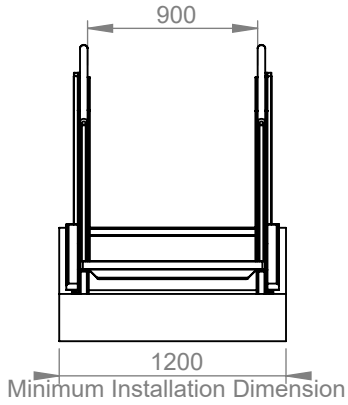

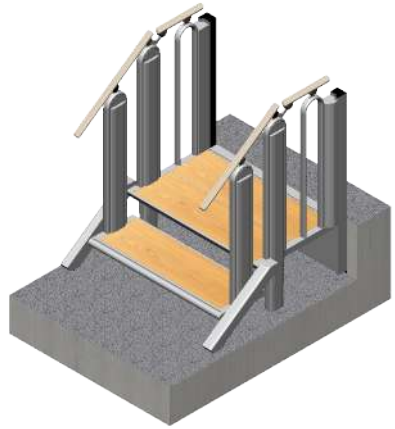



DETAIL A
SCALE 1 : 10
14 mm ingress
into platform

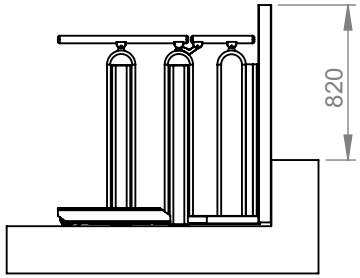

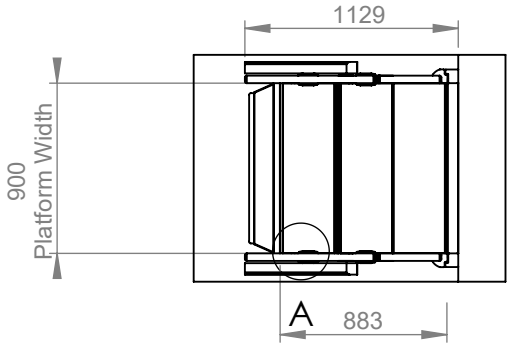

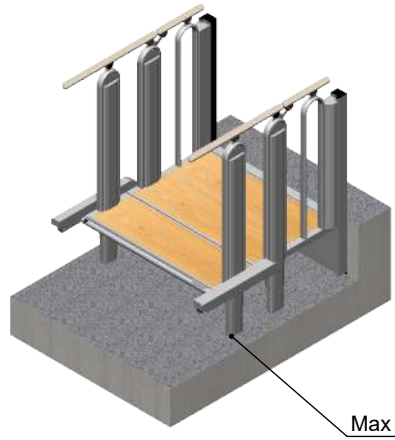

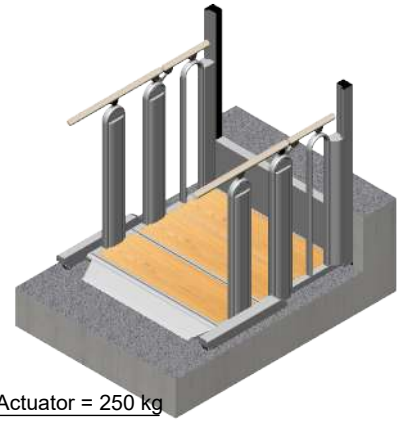

Max Static weight / Actuator = 250 kg

Token 10484

Distributor :				liftup
Customer Ref : Customer Name :				
Model :	**FlexStep 2+1 Steps**	A4		Liftup Order Number :
Lifting Capacity: 400 kg	All Rights reserved Liftup A/S		Scale:1:40	12-09-2019

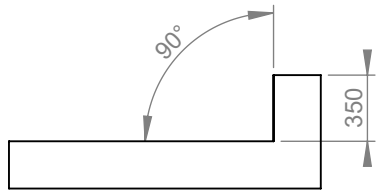

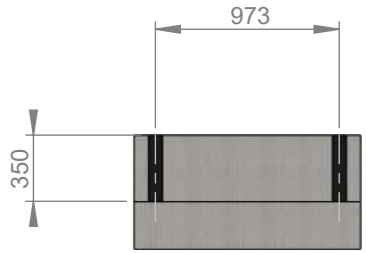

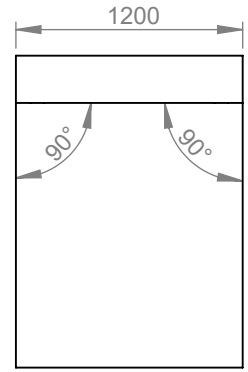

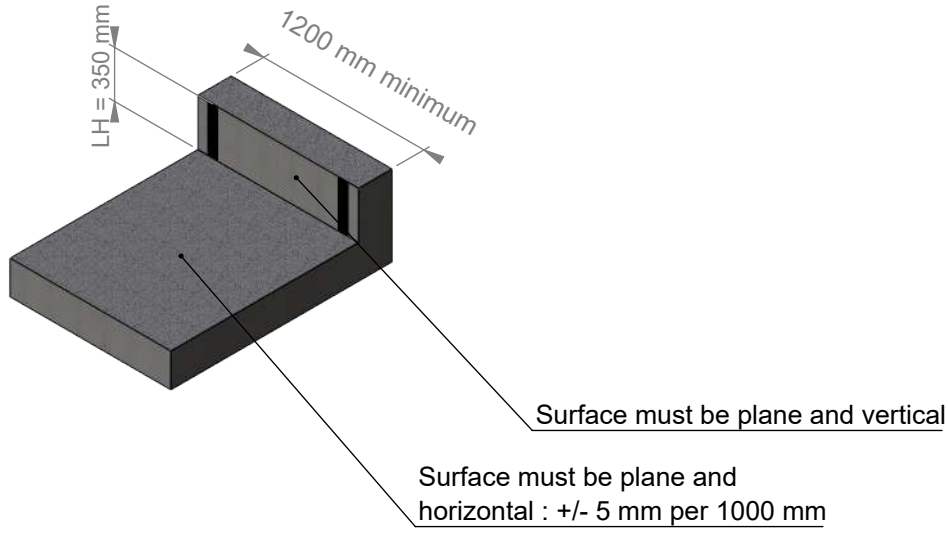

BUILDING SPECIFICATIONS

Token 10484

Distributor :			liftup
Customer Ref : Customer Name :			
Model : **FlexStep 2+1 Steps**	A4		Liftup Order Number :
Lifting Capacity: 400 kg	All Rights reserved Liftup A/S	Scale:1:40	12-09-2019

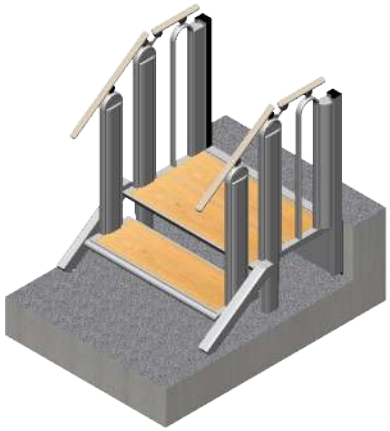





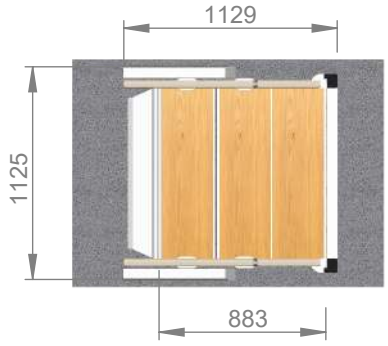

PRODUCT DIMENSIONS

Token 10484

Distributor :			liftup
Customer Ref : Customer Name :			
Model : **FlexStep 2+1 Steps**	A4		Liftup Order Number :
Lifting Capacity: 400 kg	All Rights reserved Liftup A/S	Scale:1:40	12-09-2019

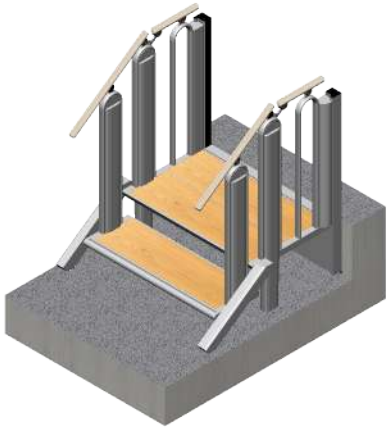

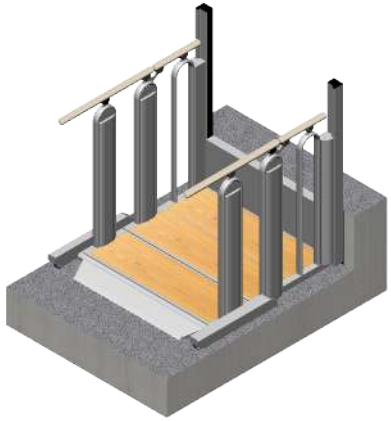

IMPORTANT : Specifications in the table below are NOT production information.
Please refer to Liftup official order Confirmation !

Specifications/Options	Your Product
Installation	Indoor
Travel (mm)	350
Width (mm)	900
Balustrade Type	Round
Safety Top	No Safety
Lift Colour	Grey Akzo 900 Sablé
RAL Colour	
Step Inserts Type	Pine
Handrails Type	Oak
Wood Treatement	
Lower Call St.	
Upper Call St.	
Operating Panels	Left Hand Side
Remote Handheld	0
Column for Call St.	0
Key Switch ON/OFF	Yes
Extra Keys	0
Prepared for dissassembly	No
Alarm Option	
Weigth of the product	250 kg
Packing	
User Manual Language	UK
Landing Instructions	No Landing Instructions Plate added to Lift

PRODUCT SPECIFICATIONS

Token
10484

Distributor :

Customer Ref :
Customer Name :

Model : **FlexStep 2+1 Steps** A4

Liftup Order Number :

Lifting Capacity: 400 kg

All Rights reserved Liftup A/S

Scale:1:40

12-09-2019